TUGAS AKHIR - MO 141326

ANALISIS KERUNTUHAN BERBASIS KEANDALAN PADA BANGUNAN LEPAS PANTAI TIPE *JACKET* TERHADAP KEMIRINGAN AKIBAT *SETTLEMENT*

Fikri Imanudin

NRP. 04311440000087

Dosen Pengampu

Ir. Murdjito, M.Sc. Eng.

Agro Wisudawan, S.T., M.T.

Departemen Teknik Kelautan

Fakultas Teknologi Kelautan

Institut Teknologi Sepuluh Nopember

Surabaya

2018

FINAL PROJECT - MO 141326

RELIABILITY BASED COLLAPSE ANALYSIS OF JACKET OFFSHORE PLATFORM AGAINTS TITL DUE TO SETTLEMENT

Fikri Imanudin

NRP. 04311440000087

Supervosors

Ir. Murdjito, M.Sc. Eng.

Agro Wisudawan, S.T., M.T.

Departmen of Ocean Engineering

Faculty of Marine Technology

Institut Teknologi Sepuluh Nopember

Surabaya

2018

ANALISIS KERUNTUHAN BERBASIS KEANDALAN PADA BANGUNAN LEPAS PANTAI TIPE *JACKET* TERHADAP KEMIRINGAN AKIBAT *SETTLEMENT*

TUGAS AKHIR

Ditujukan Untuk Mmenuhi Salah Satu Syarat Memperoleh Gelar Sarjana Teknik Pada Program Studi S-1 Departemen Teknik Kelautan, Fakultas Teknologi Kelautan, Institut Teknologi Sepuluh Nopember

Oleh :

Fikri Imanudin

NRP. 04311440000087

Disetujui oleh:

1. Ir. Murdjito, M.Sc.Eng. (Pembimbing 1)

.....

2. Agro Wisudawan, S.T., M.T. (Pembimbing 2)

.....

3. Yoyok Setyo Hadiwidodo, S.T., M.T., Ph.D. (Penguji 1)

.....

4. Nur Syahroni, S.T., M.T., Ph.D. (Penguji 2)

.....

5. Ir. Mas Murtedjo, M.Eng. (Penguji 3)

.....

Surabaya, Januari 2018

(Halaman ini sengaja dikosongkan)

ANALISIS KERUNTUHAN BERBASIS KEANDALAN PADA BANGUNAN LEPAS PANTAI TIPE *JACKET* TERHADAP KEMIRINGAN AKIBAT *SETTLEMENT*

Nama : Fikri Imanudin
NRP : 04311440000087
Departemen : Teknik Kelautan
Dosen Pembimbing : Ir. Murdjito, M.Sc.Eng
Agro Wisudawan, S.T., M.T.

ABSTRAK

Kemiringan pada bangunan lepas pantai atau *platform* akibat *settlement* akan sangat berisiko bagi kelangsungan operasi dari bangunan tersebut. Bangunan yang mengalami kemiringan akan dihadapkan pada dua pihihan yaitu tetap lanjut beroperasi dengan resiko tinggi atau diberhentikan dengan nilal kerugian yang tidak sedikit. Untuk itu perlu dilakukan analisis terhadap sebuah *platform* yang mengalami kemiringan akibat *settlement*. Pada tugas akhir ini dilakukan analisis keruntuhan berbasis keandalan pada *platform* dalam kondisi kemiringan kritis. Sudut kemiringan kritis didapatkan dengan melakukan *inplace analysis* menggunakan SACS dengan variasi sudut kemiringan tiap 0,5 derajat sampai 3 derajat. Pemodelan kemiringan dilakukan dengan skema penambahan momen yang ditimbulkan akibat *lateral displacement* yang diakibatkan kondisi kemiringan tersebut. Analisis keruntuhan dilakukan dengan menggunakan software SACS. Nilai keandalan struktur didapatkan dengan menghitung keandalan member-member yang mengalami kondisi plastisitas maksimum. Didapatkan nilai sudut kemiringan kritis *platform* adalah 0,872 derajat dengan tambahan momen sebesar 8815 ft-kips. Nilai RSR dari hasil analisis keruntuhan pada kondisi kritis tersebut adalah 16,22 dengan nilai *base shear* yang menyebabkan keruntuhan sebesar 1732,33 kips yang berarti struktur masih layak karena telah melampaui nilai minimum RSRnya sebesar 1,6. Nilai keandalan *platform* terhadap keruntuhan pada kondisi kritis adalah 0,7807 yang menyatakan struktur masih handal namun memiliki nilai indeks keandalan sebesar 1,592 yang didapat pada member 392-492 yang menyatakan keandalan struktur tidak memiliki jaminan yang cukup.

Kata Kunci : Keruntuhan, Keandalan, Platform miring, *Settlement.*

(Halaman ini sengaja dikosongkan)

RELIABILITY BASED COLLAPSE ANALYSIS OF JACKET OFFSHORE PLATFORM AGAINTS TILT DUE TO SETTLEMENT

Nama : **Fikri Imanudin**
NRP : **04311440000087**
Departemen : **Ocean Engineering**
Dosen Pembimbing : **Ir. Murdjito, M.Sc.Eng**
Agro Wisudawan, S.T., M.T.

ABSTRACT

The tilt offshore platform due to settlement will be risky for the operation of the platform. The tilt offshore platform will be faced with two choices, there are still continued to operate with high risk or decomissioned but it will caused high loss of economical value. Therefore, it is necessary to analyze the tilt offshore platform due to settlement. In this final project, reliability-based collapse analysis is performed on the platform under critical tilt conditions. The critical tilt angle is obtained by inplace analysis using SACS with angle tilt variation of each 0.5 degrees to 3 degrees. Tilt modeling conditions is done by the scheme of adding moments caused by lateral displacement wich resulted from the tilt conditions. The collapse analysis is done using SACS software. The reliability value of the structure is obtained by calculating the reliability of members which has maximum plasticity conditions. The analysis resulting a platform critical tilt angle value is 0.872 degrees with additional moment of 8815 ft-kips. The RSR value of collapse analysis at the critical condition is 16.22 with the base shear value wich caused collapse condition is 1732.33 kips which means the structure is still feasible because it has exceeded the minimum RSR value of 1.6. The reliability value of the platform against the collapse in critical condition is 0.7807 which states the structure is still reliable but has a value of reliability index of 1.592 obtained on 392-492 member which states that the reliability of the structure has not reasonable assurance.

Keyword : Collapse, Reliability, Tilt Platform, Settlement

(Halaman ini sengaja dikosongkan)

KATA PENGANTAR

Puji dan syukur kita panjatkan kepada Allah SWT yang telah melimpahkan rahmat dan karuniaNya sehingga penulis bisa menyelesaikan Tuga Akhir yang berjudul "Analisis Keruntuhan Berbasis Keandalan pada Bangunan Lepas Pantai Tipe *Jacket* terhadap Kemiringan akibat *Settlement*" ini dengan baik. Laporan ini disusun untuk memenuhi salah satu persyaratan dalam menyelesaikan Studi Kesarjanaan (S-1) di Departemen Teknik Kelautan, Fakultas Teknologi Kelautan, Institut Teknologi Sepuluh Nopember Surabaya. Penulis sadar bahwa pada penulisan Tugas Akhir ini masih terdapat banyak kesalahan dan jauh dari kata sempurna. Oleh karena itu kritik dan saran yang membangun penulis harapakan untuk evaluasi dan perbaikan dari Tugas Akhir ini.

Demikian laporan ini penulis susun dengan sebaik-baiknya. Penulis berharap laporan ini dapat menjadi panduan dan acuan dalam pembuatan Tugas Akhir yang mempunyai topik yang sama dan berharap ke depannya bisa lebih disempurnakan lagi. Atas perhatiannya penulis ucapkan terima kasih.

Surabaya, Januari 2018

Fikri Imanudin

NRP. 04311440000087

(Halaman ini sengaja dikosongkan)

UCAPAN TERIMA KASIH

Penulis telah mendapatkan dukungan dan bantuan yang sangat berpengaruh dalam penyelesaian Tugas Akhir ini. Untuk itu penulis ingin menyampaikan terima kasih kepada:

1. Mamah, Bapak dan Keluarga di Pandeglang yang selalu mendoakan dan mendukung dalam segala aspek, baik moril maupun materil.
2. Dosen Pembimbing yaitu Bapak Ir. Murdjito, M.Sc.Eng. Dan Bapak Agro Wisudawan, S.T., M.T. yang selalu bersedia membimbing dan mengarahkan untuk menjadikan Tugas Akhir ini sebaik mungkin.
3. Dosen-dosen Teknik Kelautan yang telah mau menurunkan ilmunya.
4. Manajemen Jurusan khususnya Bapak Dr.Eng. Rudi Walujo P., S.T., M.T. dan seluruh jajarannya yang selalu membantu dalam hal administrasi dan tentu sangat membantu dalam penyelesaian Tugas Akhir ini.
5. Senior-senior dan para engineer di PT ZEE Indonesia yang telah memberikan banyak pengetahuan praktikal yang tidak saya dapatkan di kampus.
6. Aa Heru yang udah kaya jadi dosen pembimbing ketiga, maaf ya A kalo sering ganggu haha.
7. Teman-teman MAELSTORM 2014 yang telah mewarnai masa perkuliahan selama ini, see you on top rek, HANTAM!!! LAWAN!!! CUK!!!
8. Reynaldi Rovi aka KID teman seperjuangan TA yang banyak membantu saat menemukan jalan buntu, suwun lho.
9. Konco ngetrip dan kulineran tipis-tipis Ojan, Beri, Ian, Yz, Grandis, Mikel, Galer, Fikri, Cibot, Wak Yoga, RWA, Marsa, Gilang, QQ, Eki dan Prima yang sudah mau menjadi teman berbagi suka duka perkuliahan di TEKLA, gue bakal kangen banget CENGENGESAN bareng lo pada.

10. Konco garap TRB Iqbal, Mada, Paung (TRB 1) dan Azzam, Bela (TRB 2,3). Suwun re katas kerjasamanya. We did it.

11. Teman-teman Himatekla, LDJ, OCEANO, SE JOSS, OURC dan OPRES yang sudah memberikan pengalaman bermanfaatnya selama masa perkuliahan.

12. Teman-teman seperantauan dan seperjuaangan BADUY khususnya Dicki, Mail, Ajeng, Rijal, Fikri dan Iik yang membuat perantauan serasa kampung halaman.

13. Teman-teman SMANSA cabang malang Fiher, Wafa, Tomi, Ucil, Ade, Kemal dan Isti dan teman super sepemikiran Ojan M13 yang selalu mau menampung dan menemani pas lagi sumpek-sumpeknya di Surabaya, jangan bosen gue repotin yah hehe.

14. Teman-teman ambis prestatif Ganapatih Galura, RWA, Sekar dan Joey. Selalu ingat prinsip kita "Fake It Till You Make It".

15. The Gengsss yang selalu menghibur dan menyemangati. Best friend forever guys.

16. Pihak-pihak yang tidak bisa penulis sebutkan satu persatu.

Sekali lagi saya ucapkan Terima Kasih, semoga Allah membalas dengan balasan yang baik.

Surabaya, Januari 2018

Fikri Imanudin

NRP. 04311440000087

DAFTAR ISI

(Halaman ini sengaja dikosongkan)

DAFTAR GAMBAR

DAFTAR TABEL

BAB I

PENDAHULUAN

1.1. Latar Belakang

Bangunan lepas pantai dalam masa operasinya bisa mengalami suatu insiden yang dapat mengurangi integritas struktur bangunan tersebut. Insiden yang terjadi bisa bermacam-macam, bisa berupa tumbukan kapal, gempa bumi, ledakan, *settlement*, *subsidence* dan lain sebagainya yang bisa membahayakan kelangsungan operasi dari bangunan lepas pantai tersebut. Salah satu kejadian yang banyak dialami oleh bangunan lepas pantai adalah *settlement* yang akan berujung pada penurunan *deck clearance* atau *air gap* yang telah ditentukan dalam perencanaan. Selain itu *settlement* juga bisa terjadi secara lokal yang artinya penurunan setiap titik pada permukaan tanah tidak sama dan tentu ini akan berujung pada kemiringan bangunan lepas pantai atau *platform* tersebut.

Hal semacam ini akan menjadi sebuah dilema bagi perusahaan pemilik bangunan tersebut, mereka dihadapkan pada dua pilihan antara menghentikan atau melanjutkan operasi pada *platform* tersebut. Ini bukanlah pilihan yang mudah, ketika mereka memilih untuk menghentikan operasi dari *platform*, mereka akan mengalami kerugian yang telah mereka keluarkan untuk membangun *platform* tersebut yang seharusnya baru akan tertutupi ketika *platform* sudah melakukan operasi sampai waktu yang telah ditentukan. Tetapi mereka juga dihadapkan pada resiko yang sangat tinggi ketika mengambil keputusan untuk melanjutkan operasi dari *platform* tersebut. Untuk menentukan langkah yang tepat, maka sekiranya perlu diadakan sebuah penelitian yang mencari pengaruh kemiringan terhadap keruntuhan pada *platform.*

Penelitian ini akan mencari seberapa besar kemiringan yang diijinkan bagi sebuah platform untuk tetap bisa bekerja secara optimal dan juga pengaruh dari kemiringan tersebut terhadap keruntuhan *platform*. Sehingga diharapkan kedepannya dengan adanya penelitian ini, para pemilik *platform* bisa menentukan keputusan yang tepat pada kasus-kasus *platform* miring.

1.2. Perumusan Masalah

Permasalahan yang akan dikaji dalam tugas akhir ini adalah sebagai berikut:

1. Berapa nilai sudut kemiringan kritis bangunan lepas pantai tipe jacket akibat *settlement*?
2. Berapa nilai *reserve strength ratio* (RSR) struktur bangunan lepas pantai tipe *jacket* pada kondisi kemiringan kritis akibat *settlement?*
3. Berapa nilai keandalan dan indeks keandalan struktur bangunan lepas pantai tipe *jacket* terhadap keruntuhan pada kondisi kemiringan kritis akibat *settlement*?

1.3. Tujuan Penelitian

Tujuan yang ingin dicapai oleh penulis pada tugas akhir ini adalah sebagai berikut:

1. Mencari nilai sudut kemiringan kritis bangunan lepas pantai tipe *jacket* akibat *settlement*
2. Mencari nilai *reserve strength ratio* (RSR) struktur bangunan lepas pantai tipe *jacket* pada kondisi kemiringan kritis akibat *settlement*.
3. Mencari nilai keandalan strutur bangunan lepas pantai tipe jacket terhadap keruntuhan pada kondisi kemiringan kritis akibat *settlement.*

1.4. Manfaat Penelitian

Manfaat yang diharapkan oleh penulis adalah agar ke depannya metode analisis ini bisa dipergunakan dalam menentukan kondisi kemiringan kritis suatu bangunan lepas pantai dan pengaruhnya terhadap keruntuhan struktur.

1.5. Batasan Masalah

Untuk memperjelas permasalahan tugas akhir ini, maka perlu adanya ruang lingkup pengujian atau asumsi-asumsi sebagai berikut:

1. Analisis yang dilakukan dalam penulisan tugas akhir ini adalah analisis statis global.
2. Pada tugas akhir ini tidak diperhitungkan proses terjadinya *settlement*, tetapi hanya memperhitungkan pengaruh *pasca* terjadinya *settlement*.
3. Tidak memperhitungkan kapasitas pondasi.
4. Tidak melakukan *pile stress analysis*.

5. Tidak memperhitungkan terjadinya *scouring*.
6. Analisis dilakukan pada kondisi operasi dan badai dengan kedalaman perairan maksimum.
7. Perhitungan UC maksimum hanya dilakukan pada member

1.6. Sistematika Penulisan

Sistematika penulisan pada tugas akhir ini adalah sebagai berikut:

BAB I PENDAHULUAN

Bab ini menguraikan beberapa hal, antara lain.

a. Latar Belakang
b. Perumusan Masalah
c. Tujuan
d. Manfaat
e. Batasan Masalah
f. Sistematika Penulisan

BAB II TINJAUN PUSTAKA DAN DASAR TEORI

Bab ini berisi penelitian-penelitian yang telah dilakukan sebelumnya sebagai acuan dalam tugas akhir ini dan juga mengenai teori-teori pendukung yang digunakan dalam penulisan tugas akhr ini.

BAB III METODOLOGI PENELITIAN

Bab ini berisi mengenai langkah-langkah dan tata urutan pengerjaan yang dilakukan saat penulisan tugas akhir ini. Mulai dari pemodelan model, pengumpulan data, analisis sampai penarikan kesimpulan dari hasil analisis.

BAB IV ANALISIS DAN HASIL PEMBAHAHASAN

Bab ini berisi mengenai pemaparan hasil dari analisis yang dilakukan beserta pembahasannya.

BAB V KESIMPULAN DAN SARAN

Bab ini menjelaskan kesimpulan yang didapat dari hasil analisis dan saran yang dari penulis untuk kegiatan penelitian selanjutnya.

BAB II

DASAR TEORI

2.1. Tinjauan Pustaka

Analisis keruntuhan atau biasa juga disebut dengan *collapse analysis* adalah analisis statis *non-linear* yang bertujuan untuk mengetahui besarnya kapasitas sruktur untuk menerima beban sampai terjadi keruntuhan. Analisis dilakukan dengan cara penambahan beban struktur secara bertahap sampai struktur mengalami keruntuhan atau *collapse*. Setelah itu akan diketahui besar cadangan kekuatan struktur atau disebut dengan *reserve strength ratio* (RSR) (Ainillah, 2017). Analisis keruntuhan atau *collapse analysis* dilakukan apabila struktur mengalami beberapa hal antara lain perubahan desain dari perencanaan awal seperti penambahan komponen, atau pelebaran *deck* dan sebagainya, struktur mengalami insiden dalam masa operasinya, atau terjadi perubahan kondisi lingkungan dari yang diperkirakan selama masa operasi struktur tersebut, sehingga perlu diketahui berapa cadangan kekuatan struktur setelah peristiwa-peristiwa tersebut terjadi.

Analisis keruntuhan pada bangunan lepas pantai telah banyak diteliti oleh kalangan akademisi maupun *professional*. Salah satunya adalah *paper* yang berjudul "*probabilistic collapse analysis of offshore structure*" oleh Y. Murotsu, M. Kishi, H. Okada, Y. Ikeda, dan S. Matsuzaki (1986) yang diterbitkan pada *journal of offshore mechanics & artic engineering ASME*. Penelitian ini memaparkan tentang analisis keruntuhan yang mempertimbangkan aspek ketidakpastian pada perhitungan beban lingkungan.

Analisis keruntuhan juga telah banyak diteliti oleh mahasiswa Departemen Teknik Kelautan, Fakutas Teknologi Kelautan, ITS dengan berbagai latar belakang. Untuk latar belakang modifikasi struktur telah dilakukan oleh Fatih Azmi (2016) yang membahas "Analisis Resiko Keruntuhan Struktur *Breasting Dolphin* Akibat Penambahan DWT Kapal Tanker". Untuk latar belakang perubahan kondisi lingkungan telah dilakukan oleh Widi Chalbi (2017) yang membahas "Analisis *Ultimate Strength* Struktur *Jacket Platform* Berbasis Keandalan dengan Variasi Jenis Tanah" dan untuk latar belakang terjadinya insiden telah diteliti oleh Shaila

Ainillah (2017) yang membahas "Analisis *Ultimate Strength* Struktur *Jacket Platform* berbasis keandalan *Pasca Subsidence*".

Namun sampai saat ini belum ada penelitian mengenai analisis keruntuhan yang dilakukan akibat kemiringan pada *platform* akibat *settlement*. *Settlement* adalah penurunan struktur terhadap permukaan tanah akibat beban yang berlebihan pada tanah. *Settlement* bisa terjadi secara lokal yang dapat mengakibatkan struktur mengalami kemiringan. Kemirngan bangunan lepas pantai akibat *settlement* telah banyak terajdi dan dari sini penulis merasa perlu untuk diadakannya suatu penelitian mengenai bagaimana sebenarnya kekuatan dari *platform* yang mengalami kemiringan dengan berbagai variasi sudut. Tentunya kemiringan yang ditinjau masih dalam area *serviceability* dari perlengkapan-perlengkapan yang ada di dalam *platform* tersebut. Sehingga untuk kedepannya apabila analisis ini dilakukan pada setiap *platform*, hasilnya dapat dijadikan pertimbangan untuk pengambilan keputusan yang tepat pada suatu insiden *platform* miring.

2.2. Bangunan Lepas Pantai Tipe *Jacket*

2.2.1. Umum

Jacket Platform adalah salah satu jenis bangunan lepas pantai yang tergolong ke dalam *fixed platform*. Secara umum *jacket platform* dibagi menjadi tiga komponen utama yaitu *topside, jacket leg dan pile*. *Topside* atau biasa juga disebut dengan *superstructure* adalah bagian bangunan yang menampung semua perlengkapan yang berkaitan dengan fungsi bangunan itu sendiri misalnya sebagai *well head, production* atau *service platform*. Atau bisa juga hanya sebagai akomodasi dari kru saja. Selanjutnya adalah *jacket leg*, *jacket leg* atau biasa juga disebut *substructure* adalah struktur yang terdiri dari tubular-tubular yang dilas satu sama lainnya. *Jacket leg* di desain untuk menerima beban *lateral* dari lingkungan dan meneruskannya ke *pile*. Yang terakhir adalah *pile*, *pile* didesain untuk meneruskan semua beban yang diterima oleh bangunan ke tanah dan mengokohkan bangunan tersebut (API RP 2A WSD, 2002). Untuk lebih jelasnya jacket platform akan diilustrasikan pada gambar 2.1 sebagai berikut.

Gambar 2.1. *Jacket Platform*

(Sumber: google.com)

2.2.2. Batasan Operasi

Bangunan lepas pantai akan di desain sesuai operasi yang akan dilakukan diatasnya seperti operasi *drilling*, *produksi*, *wellhead* atau hanya sebagai akomodasi. Berbagai macam kegiatan tersebut membutuhkan perlengkapan-perlengkapan yang sangat kompleks dan tentunya mempunyai batasan agar dapat beroperasi secara optimal. Hal ini akan menjadi pertimbangan penting dalam mendesain sebuah bangunan lepas pantai dimana bangunan tersebut harus bisa mengatasi batasan dari perlengkapan-perlengkapan tersebut. Salah satu batasan yang menjadi isu penting adalah batasan terhadap kemiringan. Kemiringan akan membuat perlengkapan-perlengkapan yang menunjang operasi menjadi tidak optimal dalam menjalankan tugasnya, bahkan bisa berdampak pada kegagalan dan berpotensi menyebakan bahaya yang serius. Banyak sekali perlengkapan yang terpasang diatas suatu *platform*, namun yang akan menjadi perhatian khusus dalam tugas akhir ini adalah *conductor*.

Conductor adalah suatu alat yang menghubungkan bagian *topside* dengan *wellhead* di dasar laut. *Conductor* menjadi perlengkapan yang sangat kritis karena memiliki konsekuensi yang besar ketika terjadi kegagalan pada struktur tersebut, baik nyawa, kerusakan lingkungan dan tentunya materi. Dalam masa operasinya, *conductor* akan menerima beban lateral dari lingkungan, untuk itu *conductor* harus mempunyai keleluasan dalam bergerak guna mengatasi beban tersebut. sudut kemiringan *conductor* tergantung pada diameter *conductor* dengan ukuran *diverter housing* seperti yang diilustrasikan pada gambar 2.2.

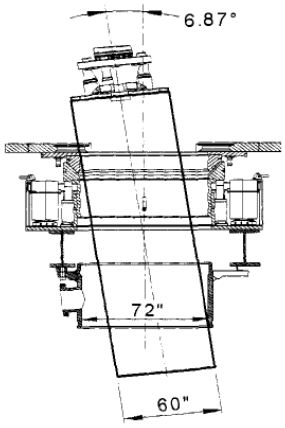

Gambar 2.2. *Conductor* menyentuh *diverter housing* saat mencapai sudut kemiringan kritis

(Sumber: Chakrabarti, 2005)

Namun biasaya ukuran *diverter housing* didesain sedemikian rupa yang membuat *conductor* hanya bisa mengalami kemiringan tiga derajat saja ketika operasi berlangsung (Chakrabarti, 2005). Nilai sudut ini akan menjadi acuan bagi penulis dalam menentukan variasi sudut pada analisis keruntuhan ini sebagai batas kemiringan kritis dari *jacket platform*.

2.3. *Settlement*

Settelement adalah turunnya elevasi struktur terhadap permukaan tanah yang disebabkan oleh kenaikan tegangan yang disertai regangan pada lapisan tanah yang diakibatkan oleh beban pondasi. (Braja M. Das, 2008). *Settlement* dibagi menjadi dua macam yaitu *uniform settlement* dan *differential settlement*. Differential *settelement* inilah yang akan membuat suatu bangunan menjadi miring. *Settlement* akan terus terjadi sampai tanah mencapai kondisi stabil. Dimana tanah sudah terkonsolidasi maksimum. Tipe-tipe settlement dan hubungannya dengan kemiringan suatu bangunan diilustrasikan pada gambar 2.3 sebagai berikut.

Gambar 2.3. Tipe-tipe *settlement* dan pengaruhnya pada bangunan

(Sumber: theconstructor.org)

2.4. Teori Pembebanan

2.4.1. Beban Mati (*Dead Loads*)

Beban mati atau *dead loads* adalah berat dari struktur dan semua perlengkapan permanen yang terpasang pada struktur yang tidak akan berubah selama moda operasi. *Dead loads* bisa juga disebut gabungan dari beberapa macam beban sebagai berikut:

1. Berat struktur di udara, termasuk didalamnya berat *piles*, *grout* dan *ballast*
2. Berat perlengkapan dan kelengkapan struktur yang dipasang secara permanen.
3. Gaya hidrostatis yang bekerja pada struktur saat struktur berada di laut.

(API RP 2A WSD, 2002)

2.4.2. Beban Hidup (*Live Loads*)

Beban hidup atau *live loads* adalah beban yang bisa berubah selama masa operasi atau dari satu mode operasi ke mode operasi lainnya. *Live loads* terdiri dari:

1. Berat dari perlengkapan *drilling* dan produksi yang bisa ditambahkan atau di hilangkan dari platform.
2. Berat *living quarter, heliport, life support equipment, life saving equipment, diving equipment,* dan perlengkapan lainnya yang bisa ditambah dan dihilangkan dari platform.
3. Berat dari keperluan yang dikonsumsi oleh kru dan dari tangki-tangki penyimpanan.

4. Beban yang diterima struktur dari operasi pengeboran, *material handling*, *vessel mooring* dan *helicopter loading*.
5. Beban yang diterima struktur dari penggunaan *crane*.

(API RP 2A WSD, 2002)

2.4.3. Beban Lingkungan

Beban lingkungan adalah beban yang mengenai struktur yang dibangkitkan oleh fenomena alam seperti angin, gelombang, arus, gempa bumi, salju, es dan pergerakan tanah. Perubahan gaya hidrostatis yang diakibatkan oleh perubahan muka air laut akibat gelombang dan pasang surut juga termasuk ke dalam beban lingkungan (API RP 2A WSD, 2002).

Dalam penulisan tugas akhir ini tidak semua beban lingkungan dihitung, hanya beban-beban yang selalu ada pada setiap bangunan lepas pantai dan mempunyai pengaruh yang signifikan terhadap struktur yang akan diperhitungkan seperti beban hidrostatis, beban gelombang, beban arus dan beban angin. berikut adalah penjabarannya :

2.4.3.1. Tekanan Hidrostatis

Tekanan hidrostatis adalah tekanan yang diakibatkan oleh berat dari fuida tempat bangunan tersebut diletakan. Tekanan hidrostatis dihitung dengan persamaan sebagai beikut.

$$p = \gamma\, H_z \tag{2.1}$$

$$H_z = z + \frac{H_w}{2}\left(\frac{\cosh|k(d-z)|}{\cosh kd}\right) \tag{2.2}$$

Dimana :

p = tekanan hidrostatis, ksi (MPa)

γ = berat jenis air, 64 lbs/ft^3 (0,01005 MN/m^3)

H_z = *hydrostatic head*, ft (m)

z = kedalaman dari permukaan air, ft (m), nilai z positif ke arah bawah

H_w = tinggi gelombang, ft (m),

k = $\frac{2\pi}{L}$ (angka gelombang) dimana L adalah panjang gelombang, ft^{-1} (m^{-1})

d = kedalaman perairan, ft (m)

2.4.3.2. Beban Gelombang dan Arus (Gaya Hidrodinamis)

Pada struktur lepas pantai tipe *jacket*, beban gelombang dan arus dihitung bersamaan dengan menggunakan persamaan morison. Hal ini disebabkan karena struktur jacket terdiri dari tubular-tubular yang bisa diasumsikan sebagai struktur langsing. Untuk lebih mudah berikut penulis tampilkan skema dalam perhitungan beban gelombang dan arus.

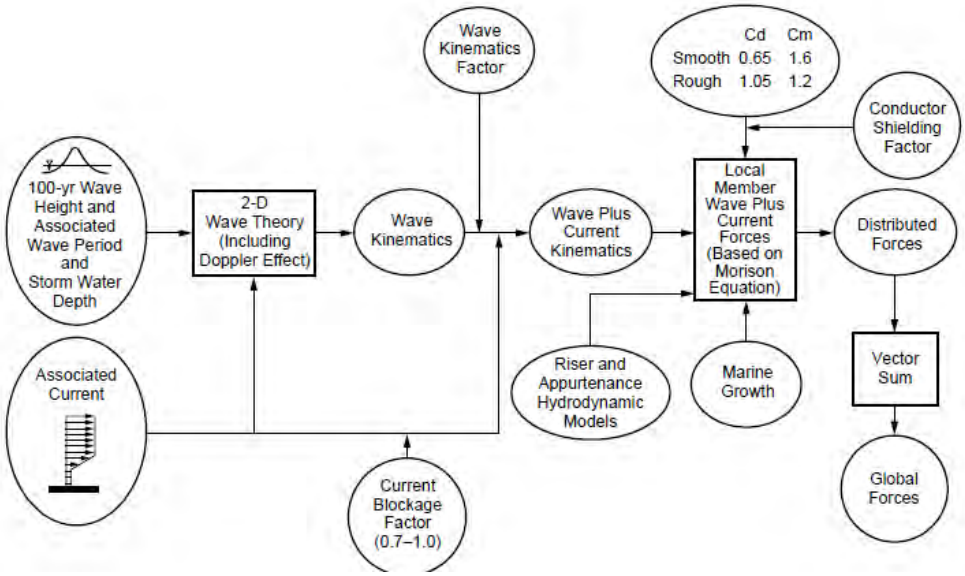

Gambar 2.4. Prosedur perhitungan beban gelombang dan arus

(Sumber: API RP 2A WSD, 2002)

dari skema diatas dapat diketahui bahwa hal yang pertama dilakukan adalah mencari nilai kinematis dari gelombang dan arus. Untuk mencari nilai kinematis dari gelombang, terlebih dahulu kita harus menentukan teori gelombang yang akan kita pakai menggunakan pendekatan grafik validasi teori gelombang.

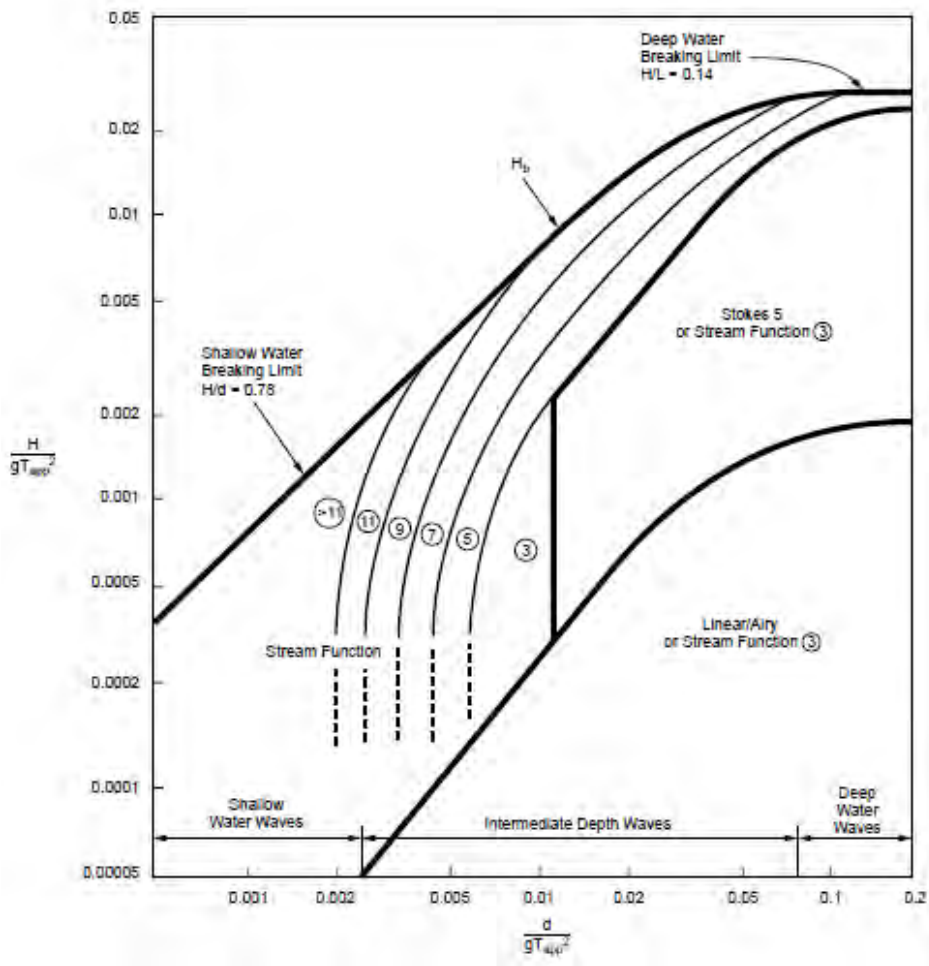

Gambar 2.5. Grafik Validasi Teori Gelombang

(Sumber: API RP 2A WSD, 2002)

Terdapat banyak sekali teori gelombang seperti teori gelombang airy, stoke, cnoidal, dan stream function. Namun penulis hanya akan membahas tentang teori gelombang stokes orde lima yang digunakan dalam analisis beban gelombang pada penulisan tugas akhir ini.

Stokes orde 5 adalah gabungan dari persamaan-persamaan stokes orde-orde dibawahnya. Teori ini hanya valid pada daerah perairan dengan nilai $H/d \leq (kd)^2$, untuk $(kd) < 1$ dan $H/L \leq 1$. Untuk itu teori ini tidak berlaku pada laut yang memiliki kedalaman dangkal. Teori stoke masih termasuk teori gelombang reguler yang masih mengsumsikan fluida memiliki sifat ideal, *incompressible*, *steady,* dan dianggap dasar laut kedap terhadap air. Teori gelombang stoke orde 5 memiliki persamaan *velocity potential* sebagai berikut.

$$\phi = \frac{c}{k}\sum_{n=1}^{5} \lambda_n \cosh nk(z+d)\ sin\, n(kx - \omega t) \tag{2.3}$$

Dari persamaan 2.3, kita bisa menentukan nilai kinematis dari gelombang stoke orde 5 sebagai berikut.

$$u = \frac{\partial \phi}{\partial x} = c\sum_{n=1}^{5} n\ \lambda_n \cosh nk(z+d)\ cos\, n(kx - \omega t) \tag{2.4}$$

$$w = \frac{\partial \phi}{\partial z} = c\sum_{n=1}^{5} n\ \lambda_n \sinh nk(z+d)\ sin\, n(kx - \omega t) \tag{2.5}$$

$$\dot{u} = \frac{\partial u}{\partial t} = -c\sum_{n=1}^{5} n^2\ \lambda_n\ \omega \sinh nk(z+d)\ sin\, n(kx - \omega t) \tag{2.6}$$

$$\dot{w} = \frac{\partial w}{\partial t} = c\sum_{n=1}^{5} n^2\ \lambda_n \omega \cosh nk(z+d)\ cos\, n(kx - \omega t) \tag{2.7}$$

Dengan nilai λ yang telah ditentukan sebelumnya oleh Skjelbreia dan Hendrikson (1961).

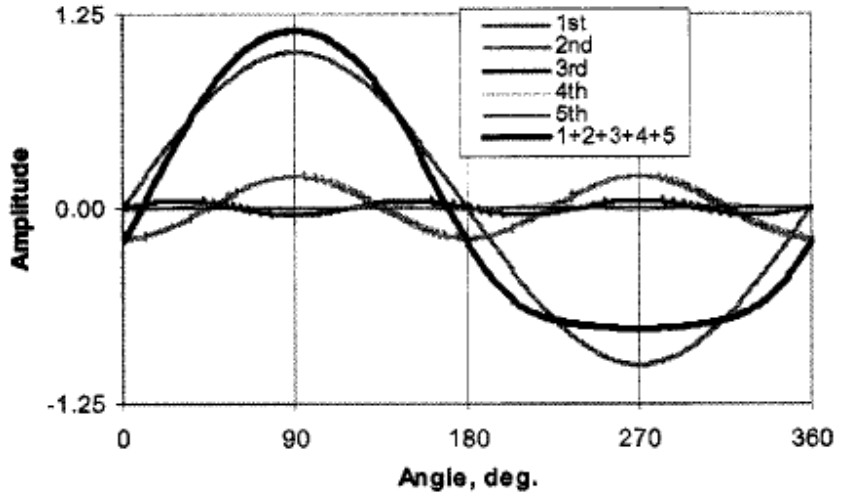

Gambar 2.6. Komponen-komponen gelombang stoke orde 5

(Sumber : Chakrabarti, 2005)

Sementara untuk menentukan nilai kinematis dari arus, digunakan data hasil dari *survey*. Data arus biasanya berupa data kecepatan pada tingkat kedalaman perairan.

Setelah kedua hal itu kita dapatkan, kita bisa langsung menghitungnya ke dalam persamaan morison sebagai berikut.

$$F = F_D + F_I = \frac{1}{2} C_D \rho D u|u| + \frac{\pi}{4} C_m \rho D^2 \frac{\delta u}{\delta t} \quad (2.8)$$

Dimana :

F = gaya hidrodinamis pada struktur, kips/ft (kN/m)

F_D = gaya drag, kips/ft (kN/m)

F_I = gaya inersia, kips/ft (kN/m)

C_D = koefisien drag

C_m = koefisien inersia

ρ = massa jenis air laut, 1,989 slugs/ft^3 (1,025 ton/m^3)

D = diameter tubular, ft (m)

u = gabungan komponen kecepatan dari gelombang dan arus arah x, ft/s (m/s)

$\frac{\delta u}{\delta t}$ = komponen percepatan gelombang arah x, ft/s^2 (m/s^2)

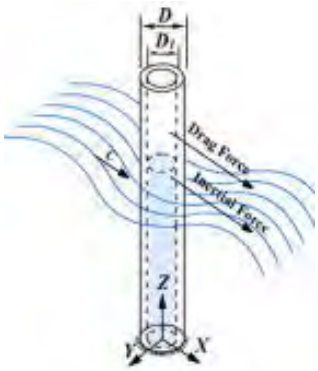

Gambar 2.7. Ilustrasi sebuah struktur silinder terpancang yang dikenani oleh gelombang

(Sumber: sciencedirect.com)

Persamaan diatas berlaku pada silinder lurus terpancang tegak, sementara untuk silinder yang terpancang miring seperti pada *bracing* dan *battered legs* terdapat modifikasi pada persamaan diatas pada komponen kinematisnya karena adanya perbedaan orientasi gaya gelombang (Djatmiko, 2014).

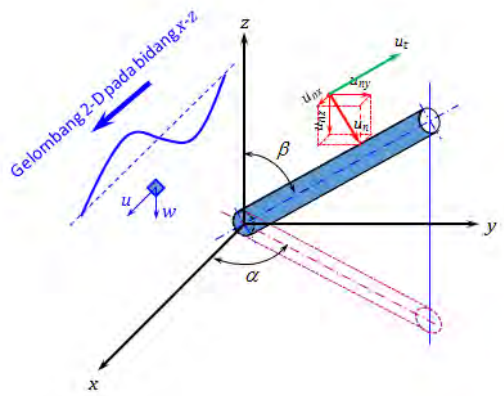

Gambar 2.8. Ilustrasi sebuah struktur silinder terpancang miring yang dikenai oleh gelombang

(Sumber : Djatmiko, 2014)

Maka pada struktur terpancang miring tersebut perhitungan gaya gelombang menjadi seperti berikut ini.

$$F_x = F_{Dx} + F_{Ix} = \frac{1}{2} C_D \rho D u_n |u_{nx}| + \frac{\pi}{4} C_m \rho D^2 \frac{\delta u}{\delta t}_{nx} \quad (2.9)$$

$$F_y = F_{Dy} + F_{Iy} = \frac{1}{2} C_D \rho D u_n |u_{ny}| + \frac{\pi}{4} C_m \rho D^2 \frac{\delta u}{\delta t}_{ny} \quad (2.10)$$

$$F_z = F_{Dz} + F_{Iz} = \frac{1}{2} C_D \rho D u |u_{nz}| + \frac{\pi}{4} C_m \rho D^2 \frac{\delta u}{\delta t}_{nz} \quad (2.11)$$

Untuk komponen kecepatan masing-masing arah adalah sebagai berikut.

$$u_{nx} = u - e_x(e_x u + e_z w) \quad (2.12)$$

$$u_{ny} = -e_y(e_x u + e_z w) \quad (2.13)$$

$$u_{nz} = w - e_z(e_x u + e_z w) \quad (2.14)$$

Sementara untuk komponen percepatannya adalah sebegai berikut.

$$\frac{\delta u}{\delta t}_{nx} = \frac{\delta u}{\delta t} - e_x(e_x \frac{\delta u}{\delta t} + e_z \frac{\delta w}{\delta t}) \quad (2.15)$$

$$\frac{\delta u}{\delta t}_{ny} = -e_y(e_x \frac{\delta u}{\delta t} + e_z \frac{\delta w}{\delta t}) \quad (2.16)$$

$$\frac{\delta u}{\delta t}_{nz} = \frac{\delta u}{\delta t} - e_z(e_x \frac{\delta u}{\delta t} + e_z \frac{\delta w}{\delta t}) \quad (2.17)$$

Dimana :

e_x = $\sin\beta \cos\alpha$ (2,18)

e_y = $\sin\beta \sin\alpha$ (2.19)

e_x = $\cos\beta$ (2.20)

2.4.3.3. Beban Angin

Sebagaimana gelombang, angin adalah beban yang bersifat dinamis di alam. Namun, pada perhitungan struktur, struktur diasumsikan memberikan respon yang statis. Angin memberikan sumbangsih sekitar sepuluh persen terhadap keseluruhan beban lingkungan yang bekerja terhadap struktur (API RP 2A WSD, 2002).

Sama halnya dengan gaya hidrodinamis, pada perhitungan beban angin pertama-tama kita harus menentukan nilai kinematisnya yang didapat dari pengukuran. Angin diukur pada ketinggian sepuluh meter (32,8 ft). Selanjutnya nilai kecepatan angin harus disesuaikan dengan ketinggian level struktur yang akan di analisis dengan persamaan berikut.

$$u(z) = u_o \left(1 + C \ \ln\left(\frac{z}{32{,}8}\right)\right) \quad (2.21)$$

Dimana :

$u(z)$ = kecepatan pada ketinggian yang di tinjau, ft/s

u_o = kecepatan pada ketinggian 10 m (32,8 ft), ft/s

C = 5,73 x 10^{-2} x (1 + 0,0457 x u_o)$^{1/2}$

z = ketinggian yang ditinjau, ft

Setelah komponen kecepatannya didapat, nilai tersebut dimasukan ke dalam perhitungan sebagai berikut.

$$F = \frac{1}{2} \rho \, u^2 \, C_s \, A \quad (2.22)$$

Dimana :

F = gaya angin, kips (MN)

ρ = massa jenis udara, 0,0023668 slugs/ft^3

C_s = koefisien bentuk

A = luasan objek, in^2 (m^2)

Nilai dari koefisien bentuk akan dipaparkan pada table 2.1. sebagai berikut.

Tabel 2.1. Nilai Koefisien Bentuk

(Sumber: API RP 2A WSD, 2002)

Jenis Objek	Nilai Koefisien Bentuk
Balok	1,5
Sisi dari Bangunan	1,5
Silinder	0,5
Overall projected area of platform	1

2.4.4. Beban Konstruksi

Beban yang dialami saat *platform* mengalami proses fabrikasi, *loadout*, transportasi dan instalasi.

2.4.5 Beban *Removal* dan *Reinstalasi*

Untuk platform yang akan di pindahkan ke tempat baru, beban yang diakibatkan dari proses tersebut harus diperhitungkan.

2.4.6. Beban Dinamis

Beban dinamis adalah beban yang terjadi pada struktur akibat respon terhadap beban siklik atau reaksi terhadap *impact*. Hal ini bisa diakibatkan oleh gelombang, angin, gempa bumi, dan getaran akibat operasi permesinan. Sementara *impact* bisa diakibatkan oleh tabrakan dengan kapal (*collision*), benda jatuh dan operasi

pengeboran (API RP 2A WSD, 2002). Namun dalam tugas akhir ini, beban dinamis tidak diperhitungkan.

2.5. Tegangan Pada Struktur

Struktur akan mengalami tegangan sebagai respon terhadap beban-beban yang mengenainya, tegangan yang terjadi pada struktur haruslah tidak menimbulkan kerusakan pada struktur. Untuk mencegah hal tersebut maka dibuatlah standar berupa tegangan yang dijinkan dialami struktur pada tipe pembebanan tertentu yang akan diapaparkan berikut ini.

2.5.1. Tegangan Aksial

Tegangan aksial adalah tegangan yang diakibatkan oleh gaya yang tegak lurus penampang struktur. Dari definisi tersebut, secara sederhana persamaan dari tegangan aksial dapat dinyatakan sebagai berikut.

$$\sigma = \frac{P}{A} \tag{2.23}$$

Dimana :

σ = tegangan *aksial*, ksi (MPa)

P = gaya yang bekerja, kips (MN)

A = luasan penampang, in^2 (m^2)

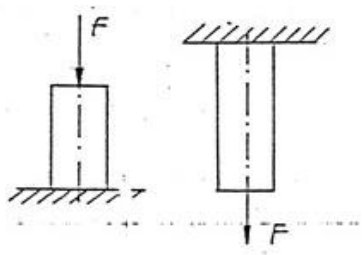

Gambar 2.9. Pembebanan aksial

(Sumber : google.com)

2.5.2. Tegangan Tekan Aksial

Tegangan tekan aksial adalah tegangan yang disebabkan oleh gaya yang tegak lurus penampang potongan dari struktur yang arahnya menekan struktur. Bentuk

kegagalan struktur akibat tegangan ini biasanya disebut dengan *buckling*. Menurut persamaan euler, suatu batang dengan panjang tertentu akan mengalami *buckling* apabila mendapat gaya dengan besar tertentu yang dirumuskan sebagai berikut.

$$P_{er} = \frac{\pi^2 EI}{L^2} \tag{2.24}$$

Dimana :

P_{er} = gaya minimal yang membuat *buckling*, kips (MN)

E = modulus elastisitas young, ksi (MPa)

I = momen inersia batang, in^4 (m^4)

L = panjang batang, in (m)

Buckling terdiri dari dua macam yaitu *column buckling* dan *local buckling*.

2.5.3. *Column Buckling*

Column buckling adalah fenomena buckling yang terjadi pada seluruh batang tekan berupa tekukan. Biasanya hal ini terjadi pada batang tekan yang tidak langsing dimana nilai D/t tidak lebih dari 60. *Menurut American Institute of Steel Constructions* (AISC), tegangan aksial yang dibolehkan pada member yang nilai D/t tidak lebih atau sama dengan 60 adalah sebagai berikut:

$$F_a = \frac{\left[1 - \frac{Kl/r^2}{2{C_c}^2}\right] F_y}{5/3 + \frac{3(Kl/r)}{8C_c} - \frac{3(Kl/r)^3}{8{C_c}^3}} \quad \text{untuk} \quad Kl/r < C_c \tag{2.25}$$

$$F_a = \frac{12\,\pi^2 E}{23\,(Kl/r)^2} \quad \text{untuk} \quad Kl/r \geq C_c \tag{2.26}$$

Dimana :

C_c $= \left(\frac{2\,\pi^2 E}{F_y}\right)^{\frac{1}{2}}$

E = modulus elastisitas young, ksi (MPa)

K = faktor panjang efektif

l = panjang batang bebas, in (m)

r = radius girasi, in (m)

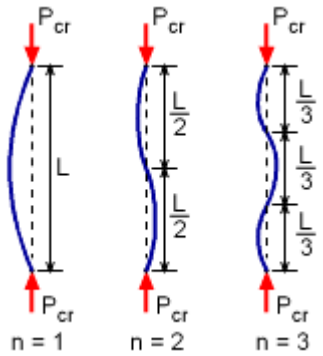

Gambar 2.10. Ilustrasi Column Buckling pada batang tekan

(Sumber: ecourse.ou.edu)

2.5.4. *Local Buckling*

Local buckling adalah fenomena *buckling* yang terjadi hanya pada bagian tertentu struktur saja (*local*) dan secara keseluruhan struktur masih bisa dianggap lurus. Hal ini biasanya terjadi pada batang tekan yang langsing dimana nila D/t lebih besar dari 60. Ada dua macam fenomena *local buckling* yaitu *elastic buckling* dan *inelastic buckling*. Pada fenomena *elastic buckling*, *buckling* terjadi hanya saat struktur menerima tegangan tertentu dan akan kembali seperti semula saat beban dihilangkan. Batas dari *elastic buckling stress* pada struktur tubular menurut API RP 2A WSD adalah sebagai berikut.

$$F_{xe} = 2CE\ t/D \tag{2.27}$$

Dimana :

C = koefisien kritis *elastic buckling*

E = modulus elastisitas young, ksi (MPa)

t = tebal batang silinder, in (m)

D = diameter silinder, in (m)

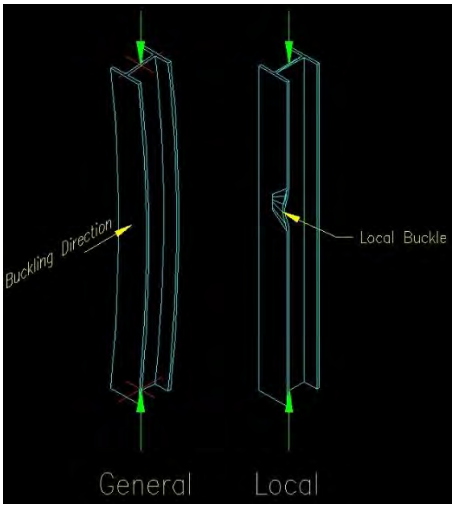

Gambar 2.11. Ilustrasi perbedaan antara global (column) buckling dan local buckling

(Sumber : bgstructuralengineering.com)

Ketika struktur mengalami tegangan diatas nilai *elastic stress local buckling*, maka struktur akan mengalami *buckling* permanen yang artinya struktur tidak dapat kembali ke bentuk semula meskipun beban sudah dihilangkan. Batas nilai plastis dari *buckling* atau disebut *inelastic local buckling* adalah sebagai berikut.

$$F_{xc} = F_y \times \left[1{,}64 - 0{,}23\,(D/t)^{1/4}\right] \leq F_{xe} \qquad (2.28)$$

$$F_{xc} = F_y \text{ untuk } (D/t) \leq 60 \qquad (2.28)$$

2.5.5. Tegangan Tarik Aksial

Tegangan tarik aksial adalah tegangan yang disebabkan oleh gaya yang tegak lurus penampang dan arahnya menarik struktur. Berdasarkan API RP 2A WSD tahun 2002, tegangan aksial yang dibolehkan terjadi pada struktur member silinder yang biasa digunakan dalam struktur *jacket* adalah sebagai berikut.

$$F_t = 0{,}6\,F_y \qquad (2.29)$$

Dimana :

F_y = tegangan *yield* material, ksi (MPa)

2.5.6. Lenturan (*Bending*)

Bending atau lenturan adalah fenomena tegangan yang disebabkan oleh momen, besarnya tegangan bending dirumuskan sebagai berikut.

$$\sigma_{max} = \frac{Mc}{I} = \frac{M}{S} \tag{2.30}$$

Dimana :

M = momen internal struktur, kips-in (MN-m)

c = jarak titik tinjauan terhadap sumbu normal, in (m)

I = momen inersia, in^4 (m^4)

S = modulus elastis, in^3 (m^3)

Menurut API RP 2A WSD, tegangan akibat bending yang diijinkan adalah

$$F_b = 0{,}75\, F_y \; untuk \; \frac{D}{t} \leq \frac{1500}{F_y} \tag{2.31}$$

$$\left(\frac{D}{t} \leq \frac{10340}{F_y}, untuk\ satuan\ SI\right)$$

$$F_b = \left[0{,}84 - 1{,}74\frac{F_y D}{Et}\right] F_y \; untuk \; \frac{1500}{F_y} < \frac{D}{t} \leq \frac{3000}{F_y} \tag{2.32}$$

$$\left(\frac{20680}{F_y} < \frac{D}{t} \leq 300, untuk\ satuan\ SI\right)$$

2.5.7. Tegangan Geser (*Shear*)

Tegangan geser adalah tegangan yang terjadi akibat gaya yang menggeser luasan potongan dari struktur. Terdapat dua fenomena yang mengakibatkan terjadinya tegangan geser, yaitu gaya geser dan momen torsi. Mengacu pada API RP 2A WSD, tegangan geser maksimum akibat gaya geser direpresentasikan sebagai berikut.

$$f_v = \frac{V}{0{,}5A} \tag{2.33}$$

Dimana :

f_v = tegangan geser maksimum, ksi (MPa)

V = gaya geser, kips (MN)

A = luasan potongan struktur, in^2 (m^2)

Dan untuk tegangan geser ijinnya adalah sebagai berikut.

$$F_v = 0{,}4\ F_y \tag{2.34}$$

Sementara untuk tegangan geser akibat momen torsi dirumuskan sebagai berikut.

$$f_{vt} = \frac{M_t(D/2)}{I_p} \tag{2.35}$$

Dimana :

f_{vt} = tegangan maksimum akibat torsi, ksi (Mpa)

M_t = momen torsi, kips-in (MN-m)

I_p = momen inersia kutub, in^4 (m^4)

2.5.8. Tegangan *Hoop*

Ketika struktur dikenai tekanan yang tersebar merata dan mengelilinya, maka struktur akan mengalami tegangan yang disebut dengan tegangan *hoop* (*hoop stress*). Pada struktur tubular *jacket platform*, tegangan hoop ini terjadi akibat adanya tekanan hidrostatis. Tegangan *hoop* bisa mengakibatkan terjadinya *local buckling* pada struktur. Secara umum Tegangan *hoop* dirumuskan sebagai berikut.

$$\sigma = \frac{PD}{2t} \tag{2.36}$$

Seperti halnya pada fenomena *buckling*, ada dua batas tegangan *hoop* yaitu *elastic hoop stress* dan *inelastic hoop stress*. Nilai masing-masing menurut API RP 2A WSD adalah.

1. Elastic hoop stress

$$F_{he} = 2\ C_h\ t/D \tag{2.37}$$

Nilai C_h adalah koefisien buckling yang terjadi akibat ketidaksempurnaan geometri struktur.

$C_h = 0{,}44\ t/D$ @$M \geq 1{,}66\ D/t$

$C_h = 0{,}44\ t/D + \frac{0{,}21(D/t)^3}{M^3}$ @$0{,}825\ D/t \leq M < 1{,}60\ D/t$

$C_h = 0{,}736/(M - 0{,}636)$ @$3{,}5 \leq M < 0{,}825\ D/t$

$C_h = 0{,}755/(M - 0{,}559)$ @$1{,}5 \leq M < 3{,}5$

$C_h = 0{,}8$ @$M < 1{,}5$

Dimana :

$M = \frac{L}{D}\ (2D/t)^{1/2}$

2. Inelastic hoop stress

$F_{hc} = 0{,}45\ F_y + 0{,}18\ F_{he}$ @$0{,}55F_y < F_{he} \leq 1{,}6\ F_y$ (2.38)

$F_{hc} = \frac{1{,}31\ F_y}{1{,}15 + (F_y/F_{he})}$ @$1{,}6\ F_y < F_{he} < 6{,}2\ F_y$ (2.39)

$F_{hc} = F_y$ @$F_{he} > 6{,}2\ F_y$ (2.40)

2.5.9. Tegangan Kombinasi

Sebelumnya telah dibahas macam-macam tegangan dasar dimana tegangan-tegangan tersebut bisa berkombinasi satu sama lainnya dan tentu harus di tinjau bagaimana efek dari kombinasi tegangan-tegangan tersebut terhadap struktur. Untuk lebih lengkapnya tegangan kombinasi untuk member silinder dan member non-silinder bisa di lihat dan dipelajarai di API RP 2A WSD atau API RP 2A LRFD dan AISC.

2.6. Kriteria Penilaian *Platform* (*Platform Assesment*)

Penilaian platform (*platform assesment*) dilakukan apabila sebuah platform mengalami beberapa kondisi atau disebut *assessment inisiator* sebagai berikut:

1. Penambahan personel

2. Penambahan fasilitas
3. Penambahan beban pada struktur
4. Tinggi dek yang tidak memadai
5. Ditemukannya kerusakan pada saat inspeksi
6. Perubahan dari desain awal

Dalam penulisan tugas akhir ini, *platform* dikategorikan telah mengalami perubahan dari desain awal, sehingga perlu diadakannya *platform assesment*. Penilain sebuah platform yang sudah ada, menurut API RP 2A WSD terdapat enam proses yaitu:

1. Pemilihan anjungan (*platform selection*)
2. Pengkategorian (*categorization*)
3. Penlaian kondisi (*condition aassesment*)
4. Cek basis desain (*design basis check*)
5. Analisis (*analysis check*)
6. Pertimbangan mitigasi (*consideration of mitigations*)

Pada tahap analysis *check*, ada dua tahapan analisis yaitu *inplace analysis* dan *colapse analysis*, ketika platform tidak lolos *screening* di tahap *inplace analysis*, maka akan dilakukan *colapse analysis*. Sebelumnya kita harus mengenal terlebih dahulu kategori keamanan dan keselamatan berdasarkan API sebagai berikut.

- S-1 *High Consequence*, adanya personel tanpa evakuasi (*manned non evacuated*)
- S-2 *Medium Consequance*, adanya personel dengan evakuasi (*manned evacuated*)
- S-3 *Low Consequance*, tidak ada personel (*unmanned*)

Selain itu terdapat juga konsekuensi kegagalan yang harus kita ketahui sebagai berikut *(Consequence of Failure)* :

- C-1 : kegagalan dengan konsekuensi tinggi *(High Consequence of Failure)*

- C-2 : kegagalan dengan konsekuensi menengah *(Medium Consequence of Failure)*
- C-3 : kegagalan dengan konsekuensi rendah *(Low Consequence of Failure)*

Dari kedua kriteria ini, kita bisa menentukan *exposure level* dari sebuah *platform*, berikut adalah *exposure level* yang diberikan oleh ISO 19902.

Tabel 2.2. Kriteria *Exposure Level*

(Sumber : ISO 19902)

Life Safety Category	***Consequence category***		
	CI	**C2**	**C3**
S1	L1	L1	L1
S2	L1	L2	L2
S3	L1	L2	L3

Setelah didapatkan *Exposure Level* dari *platform*, maka akan didapatkan nilai minimum RSR yang harus dimiliki oleh platform sesuai paparan tabel berikut.

Tabel 2.3. *Assesment Citeria*

(Sumber : API RP 2A WSD)

Level	***Exposure Category***		**Ultimate Strength Analysis**
L-1	*High Consequances*	*Manned-Nonevacuated*	RSR ≥ 1,6
		Unmanned	
L-3	*Low Consequances*	*Unmanned*	RSR ≥ 0,8

2.7. Efek P Delta (P-Δ)

Efek P delta adalah tambahan momen yang diakibatkan oleh pergeseran COG pada struktur. Biasanya efek P delta timbul saat struktur menerima beban lateral berupa beban seismik yang menyebabkan *lateral displacement* dan selanjutnya menimbulkan momen P delta seperti pada ilustrasi gambar 2.13.

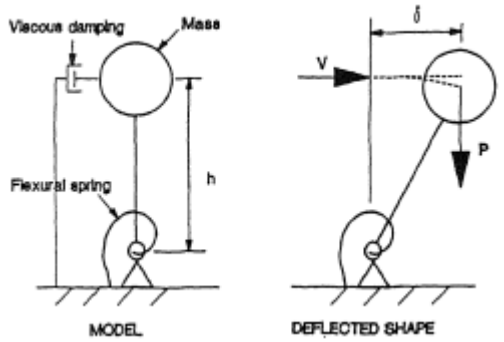

Gambar 2.12. Ilustrasi pergeseran beban akibat defleksi

(Sumber : B.J. Davidson, 1992)

Pada penelitian kali ini efek P-delta akan digunakan sebagai cara untuk memodelkan struktur miring dengan cara menambahkan nilai momen P delta pada kemiringan tertentu pada model awal. Nilai P delta pada sudut kemiringan dicari dengan mengalikan beban vertikal struktur dengan pergeseran lateral pada struktur yang dapat dicari dengan persamaan rotasi antara dua titik dengan mengasumsikan ada satu titik yang tidak mengalami perpindahan sebagai titik pusat rotasi seperti pada persamaan berikut.

$$\begin{bmatrix} X' \\ Z' \end{bmatrix} = \begin{bmatrix} (x-a) & -(z-b) \\ (z+b) & (x-a) \end{bmatrix} \begin{bmatrix} \cos\theta \\ \sin\theta \end{bmatrix} + \begin{bmatrix} a \\ b \end{bmatrix} \tag{2.41}$$

2.8. Analisis Keruntuhan

Definisi analisis keruntuhan menurut SACS adalah analisis tiga dimensi, *non-linear, large-displacement* dan *static finite element*. Analisis keruntuhan dilakukan dengan metode *pushover* untuk mengetahui cadangan kekuatan dari struktur untuk menerima beban sebelum struktur mengalami keruntuhan (Ainillah, 2017). Pada analisis *inplace*, setiap *member* pada struktur tidak diperbolehkan mempunyai *unity check* melebihi satu dalam menerima beban lingkungan baik kondisi satu tahunan

(*1-year*) maupun kondisi badai seratus tahunan (*100-year storm*). *Unity check* adalah perbandingan antara tegangan aktual pada struktur dengan tegangan ijin.

$$UC = \frac{\sigma_{actual}}{\sigma_{allowable}} \tag{2.42}$$

Nilai dari tegangan ijin selalu lebih kecil dari tegangan *yield material* dan berbeda-beda tergangung dari jenis tegangannya seperti yang sudah kita bahas pada subbab 2.5. oleh karena itu saat nilai UC dari suatu member lebih besar dari satu, struktur belum tentu mengalami keruntuhan dan meskipun nilai tegangannya melebihi tegangan *yield* dari *material*, struktur hanya mengalami deformasi secara plastis.

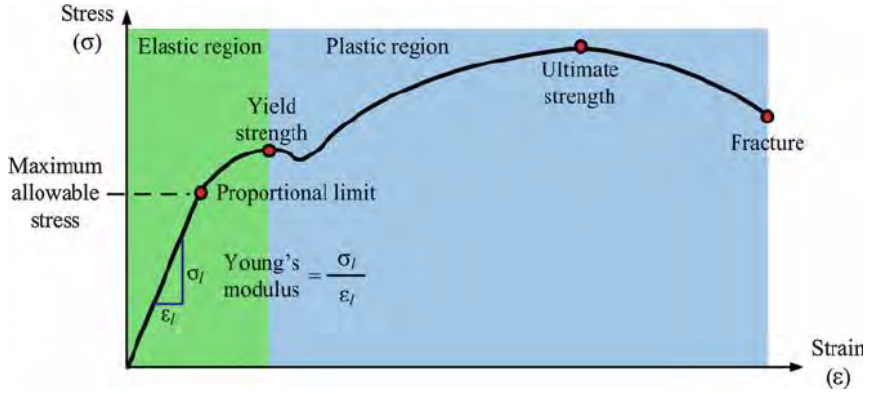

Gambar 2.14. Hubungan antara tegangan ijin, titik yield dan titik ultimat

(Sumber : researhgate.net)

Artinya struktur masih mempunyai cadangan kekuatan. Batas kekuatan struktur kita cari dengan menaikan beban secara perlahan (*incremental load*) sampai struktur *collapse*. Nilai yang kita naikan adalah beban lingkungan yang bersifat lateral, sementara beban struktur dan *appurtenance* kita anggap tetap. Nilai beban yang membuat *collapse* kita bandingkan dengan beban awal, inilah yang akan kita cari dalam analisis keruntuhan dan disebut dengan *reserve strength ratio* (RSR) (Ainillah, 2017). RSR dinyatakan dengan persamaan sebagai berikut.

$$RSR = \frac{Beban\ saat\ struktur\ collapse}{Beban\ kondisi\ awal} \tag{2.43}$$

2.9. Analisis Keandalan

2.9.1. Keandalan pada Sistem Rekayasa

Keandalan (*Reliability*) adalah kemungkinan dari suatu sistem atau komponen untuk dapat memenuhi fungsi yang dibutuhkan, pada kondisi tertentu dan pada periode waktu tertentu (IEEE, 1990). Atau bisa juga disebut sebagai kemungkinan sistem untuk tidak mengalami kegagalan (*failure*). Pada suatu sistem struktur agar tidak mengalami kegagalan, maka dibuatlah nilai *safety factor* (Z) yang harganya selalu lebih besar dari satu dimana nilai ini adalah perbandingan antara kapasitas suatu sistem struktur dalam menerima beban (X') dan beban yang ditumpunya (Y').

$$Z = \frac{X'}{Y'} \tag{2.44}$$

Mengingat harga nominal dari kapasitas X' dan beban Y' tidak dapat ditentukan dengan pasti, fungsi-fungsi kapasitas dan beban perlu dinyatakan sebagai peluang. Ketidakmampuan suatu sistem untuk memenuhi tuntutan dan tugasnya yang diukur dengan peluang kegagalan (*Probabillty of Failure*) dapat dihubungkan dengan bagian dari distribusi angka keamanan yang nilainya kurang dari satu. Peluang kegagalan sistem (PoF) diberikan dengan persamaan:

$$PoF = P[Z \leq 1] = F_z(1) \tag{2.45}$$

Dengan F_z adalah fungsi distribusi kumulatif dari Z dengan pernyataan lain, peluang sistem untuk tidak gagal (keandalan) adalah:

$$K = 1 - PoF = P[Z > 1] = 1 - F_z(1) \tag{2.46}$$

Ketika distribusi peluang bersama *(Joint Probability Distribution)* dari X dan Y diketahui, keandalan sebuah sistem dapat dihitung berdasarkan fungsi distribusi kumulatif dari X/Y. Peluang kegagalan nol (PoF = 0) dan keandalan 100 (K = 1) hanya terjadi ketika tuntutan maksimum Y_{max} tidak melewati kapasitas minimum X_{min}, sehingga kedua distribusi tidak saling *overlaping.*

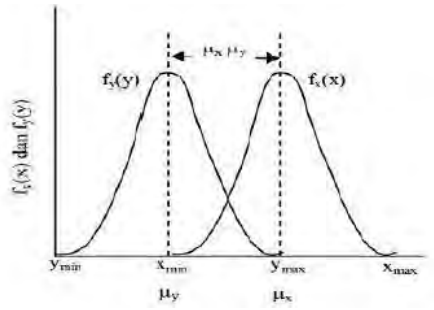

Gambar 2.14. Fungsi Distribusi Peluang X dan Y

(Sumber : Rosyid, 2007)

2.9.2. Keandalan Sistem Seri

Sebuah sistem dikatakan seri apabila salah satu komponen penyusunnya sudah cukup untuk menyebabkan kegagalan sebagian atau keseluruhan sistem tersebut. Dari sudut keandalan, seluruh konponen harus berfungsi supaya sistem tersebut berfugsi. Sistem seperti ini disebut juga sebagai *weakest link system*. Secara grafis sistem seri dapat dilihat pada gambar berikut.

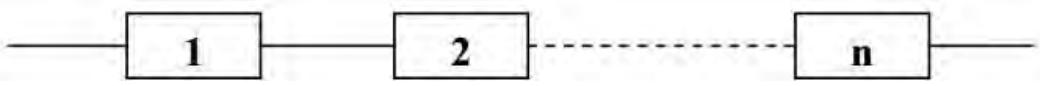

Gambar 2.15. Ilustrasi keandalan sistem seri

(Sumber : Rosyid, 2007)

Untuk sistem dengan n komponen maka keandalan sistem tersebut dapat dihitung dengan persamaans sebagai berikut.

$$Ks = K_1 x K_2 x \dots . K_n \tag{2.47}$$

Dengan memperhatikan persamaan diatas dapat dipahami dalam sistem ini semakin banyak komponen dalam sistem, maka keandalannya akan semakin kecil.

2.9.3. Keandalan Sistem Paralel

Dari aspek kegagalan, bila sebuah sistem memerlukan kegagalan seluruh komponen penyusunnya untuk tidak berfungsi sama sekali, maka sistem ini disebut sistem paralel. Dari segi keandalan, maka sistem seperti ini hanya memerlukan satu komponen penyusunnya yang berfungsi agar sistem keseluruhan tetap berfungsi.

Bila kegagalan komponen dapat dianggap *s-independent*, maka peluang kegagalan sistem paralel adalah.

$$Ks = 1 - [(1 - K_1)x(1 - K_2)x \ldots . (1 - K_n)] \quad (2.48)$$

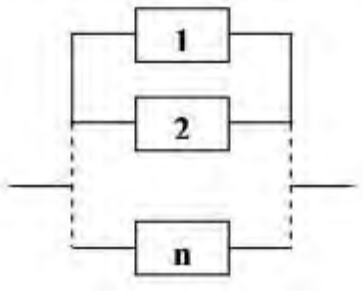

Gambar 2.16. Ilustrasi keandalan sistem paralel

(Sumber: Rosyid, 2007)

2.9.4. Metode Simulasi *Monte Carlo*

Metode simulasi monte carlo adalah metode simulasi yang dapat dilakukan untuk menyelesaikan permasalahan keandalan pada suatu sistem yang mempunyai variabel acak (Rosyid, 2007). Karakteristik pokok simulasi monte carlo adalah bahwa pada simulasi ini, suatu set nilai tiap-tiap variabel dari suatu sistem disimulasikan berdasarkan distribusi peluangnya. Dari sini kita dapat menghitung kinerja dari sistem tersebut. Perhitungan respon atau kinerja sistem ini bersifat deterministik untuk suatu set nilai dari setiap variabel. Prosedur ini diulang-ulang sampai diperoleh sekumpulan nilai dari respon atau kinerja sistem tersebut, sehingga akan didapat sekumpulan data dari kinerja sistem. Sekumpulan data ini bisa dianggap sebagai sampel data. Selanjutnya analisis statistik dapat dilakukan untuk menentukan rata-rata, simpangan baku, bahkan distribusi peluang dari respon atau kinerja sistem tersbut.

Unsur pokok yang dibutuhkan dalam simulasi monte carlo adalah *random number generator* (RNG). Simulasi akan dilakukan dengan mengambil beberapa sampel dari distribusi variabel acak dengan bantuan *random number generator* tersebut. Sampel yang telah diambil tersebut dipakai sebagai masukan ke dalam persamaan fungsi kinerja MK (x) dan MK (x) kemudian dihitung . Misalnya untuk suatu fungsi kinerja tertentu, setiap kali MK (x) > 1 maka sistem/komponen yang

ditinjau dianggap sukses, jika jumlah sampel tersebut tersebut adalah N (jumlah replikasi) dan di dapat kejadian MK (x) > 1 sejumlah n kali, maka peluang suskes dari sistem tersbut adalah P_{sukses} = n/N.

Metode simulasi monte carlo bisa dilakukan menggunakan microsoft excell yang didalamnya sudah mempunyai program RNG. Namun memang ada beberapa kelemahan dimana RNG yang tersedia cenderung linear, sedangkan peubah dasar dalam MK (x) seringkali tidak demikian (misal tersistribusi secara normal, lognormal, dan sebagainya) (Ainillah, 2017).

2.9.5. Mode Kegagalan

Dalam suatu analisis keandalan, diperlukan suatu moda kegagalan yang akan menjadi parameter dalam menentukan kesuksesan maupun kegagalan pada struktur. Moda kegagalan yang digunakan dalam tugas akhir ini adalah tegangan Von mises yang digunakan software SACS sebagai kriteria plastis dari struktur.

Tegangan Von Mises adalah kriteria kegagalan suatu objek dimana objek tersebut akan mengalami kegagalan ketika nilai tegangan Von-Misesnya melebihi tegangan ultimat dari material pembentuk objek tersebut seperti pada persamaan berikut ini.

$$\sigma_{VM} \geq \sigma_u \tag{2.49}$$

Persamaan dari tegangan Von Mises tergantung dari jenis pembebaban yang mengenai objek tersebut. Pada dasarnya persamaan tegangan Von Mises dirumuskan dari enam tegangan dasar yang mengenai objek seperti dipaparkan pada gambar 2.18 dan persamaan 2.50 berikut ini.

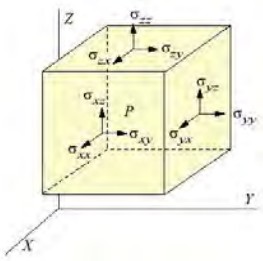

Gambar. 2.17. Ilustrasi 6 tegangan dasar pada suatu objek

(Sumber: jennarocca.com)

$$\sigma_{VM} = \sqrt{\frac{1}{2}[(\sigma_{xx} - \sigma_{yy})^2 + (\sigma_{yy} - \sigma_{zz})^2 + (\sigma_{zz} - \sigma_{xx})^2 + 6(\sigma_{xy}{}^2 + \sigma_{yz}{}^2 + \sigma_{zx}{}^2)]} \qquad (2.50)$$

Persamaan Von Mises juga bisa disusun ketika tegangan prinsip yang diketahui mengenai suatu objek seperti pada gambar 2.19 dan dinyatakan dalam persamaan 2.51. sebagai berikut.

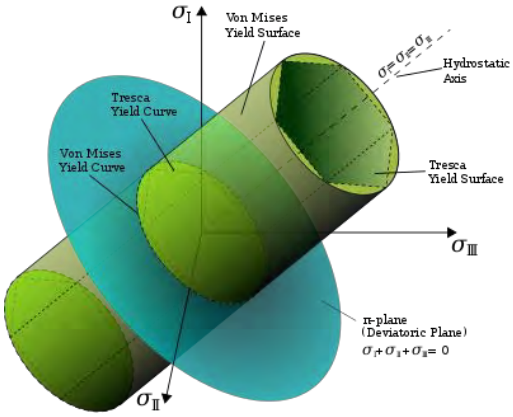

Gambar 2.18. Ilustrasi beban yang dikenai tegangan principal

(Sumber: wikipedia.com)

$$\sigma_{VM} = \sqrt{\frac{(\sigma_1-\sigma_2)^2+(\sigma_2-\sigma_3)^2+(\sigma_3-\sigma_1)^2}{2}} \qquad (2.51)$$

Mode kegagalan pada analisis keandalan dalam tugas akhir ini akan menggunakan persamaan pada 2.50 sebagai fungsi dari 6 tegangan dasar. Berdasarkan persamaan moda kegagalan tersebut, terdapat beberapa variabel yang memiliki ketidakpastian yang digunakan sebagai variabel acak yaitu σ_{xx}, σ_{yy}, σ_{zz}, σ_{xy}, σ_{xz}, σ_{yz}, σ_{xy}, dan σ_u yang disimulasikan menggunakan metode monte carlo dengan meng-generate *random number generator* (RNG). *Coefficient of varians* (CoV) untuk kapasitas adalah 0,15 dan kondisi pembebaban aktual adalah 0,3 menurut moses (1986) dalam Robayasa (2012). Berikut adalah persamaan dari CoV:

$$CoV = {}^{\sigma}/_{\mu} \qquad (2.52)$$

Dengan :

$\boldsymbol{\mu}$ = *mean*

$\boldsymbol{\sigma}$ = standard deviasi

CoV = *coefficient of varians*

Pada tugas akhir ini, persebaran beban dan kapasitas diasumsikan memiliki distribusi normal dengan pengambilan sampel lebih dari 30 yang menjadi sarat untuk mengasumsikan suatu persebara dikatakan normal.

2.9.6. Indeks Keandalan

Pada analisa keandalan, kita telah mengenal istilah safety margin atau mode kegagalan yang merupakan suatu nilai yang menentukan suatu struktur gagal atau tidak. Safety margin atau mode kegagalan seperti yang sudah dirumuskan pada persamaan 2.44.

Dari persamaan tersebut bisa didapatkan bahwa ketika z > 1 maka itu merupakan daerah aman, z = 0 adalah batas kegagalan (*failure surface*) dan ketika z < 1 maka struktur didefinisikan gagal yang diekspresikan pada persamaan 2.45. Ketika kita melakukan perhitungan probabilitas dengan jumlah percobaan tertentu pada safety margin atau mode kegagalan tersebut, maka nilai z akan mempunya rata-rata (μ_z) dan standar deviasi (σ_z). Dari sini bias kita dapatkan nilai indek keandalan yang dirumuskan pada persamaan berikut.

$$\beta = \frac{\mu_z}{\sigma_z} \tag{2.53}$$

Indeks keandalan Indek keandalan akan menjadi ukuran keandalan suatu system atau struktur disamping nilai keandalan itu sendiri. Suatu sistem atau struktur dikatakan handal ketika nilai indeks keandalannya melebihi dua.

BAB III

METODOLOGI PENELITIAN

3.1. Diagram Alir *(Flow Chart)*

Berikut merupakan diagram alir pada penulisan tugas akhir ini.

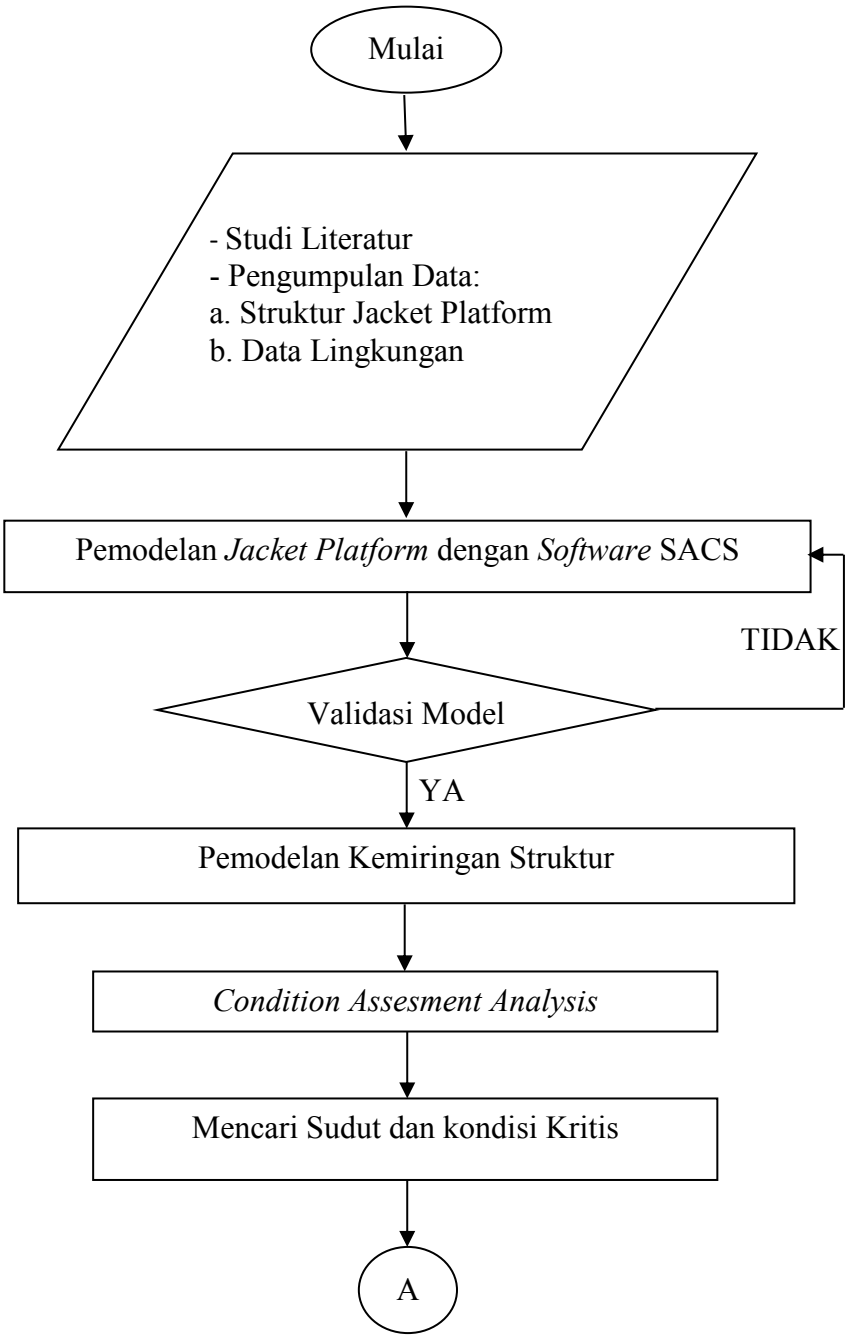

Gambar 3.1. Diagram Alir Pengerjaan Tugas Akhir

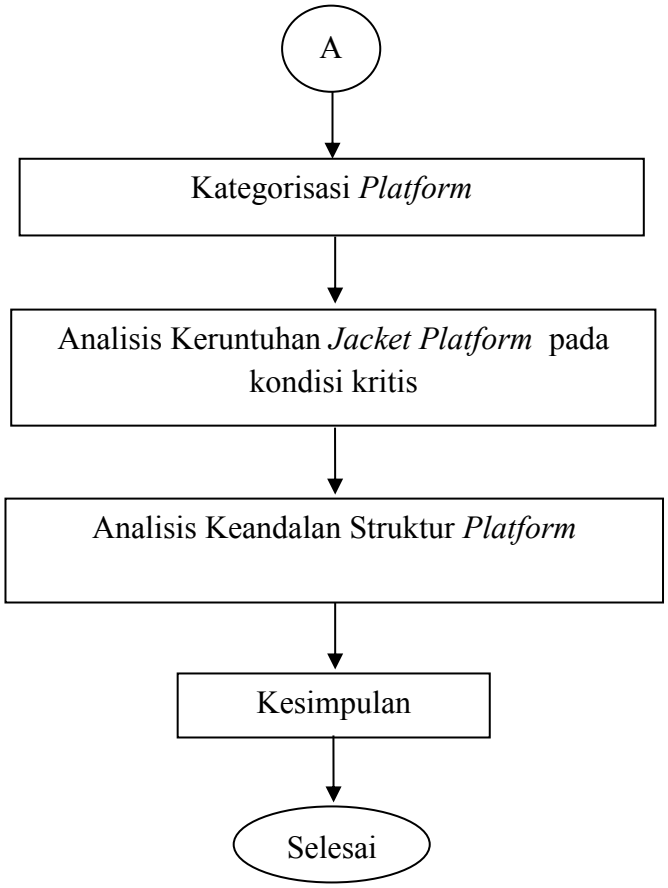

Gambar 3.1. Diagram Alir Pengerjaan Tugas Akhir

3.2. Penjelasan Diagram Alir

Berdasarkan diagram alir penelitian diatas, adapun prosedur penelitian dan langkah-langkah penelitian dalam mencapai tujuan tugas akhir ini dijelaskan sebagai berikut:

1. Studi Literatur

   Studi dan pengumpulan literatur berupa jurnal, buku dan karya tulis ilmiah lainnya sebagai bahan-bahan referensi dan sumber teori-teori yang diperlukan dalam penyelesaian tugas akhir ini.

2. Pengumpulan Data

   Data yang dibutuhkan berupa data struktur, pembebanan pada struktur (*equipment, appurtenance, dll*) dan data lingkungan.

3. Pemodelan *Platform* dengan Software SACS

Pemodelan struktur, *appurtenance*, serta pembebabanan dari data *equipment* dan lingkungan menggunakan software SACS.

4. Validasi Model

Validasi dilakukan dengan meembandingkan berat model di SACS dengan data *weigth control* struktur, model dianggap valid apabila *error* antara berat model dan yang tertera di *weight control* tidak lebih dari lima persen. Hal ini bertujuan agar model pada SACS bisa mewakili struktur sebenarnya.

5. Pemodelan Kemiringan Struktur

Pada tahap ini struktur akan dimodelkan mengalami kemiringan pada SACS yaitu dengan menambahkan beban joint deflection pada joint-joint tertentu dengan nilai tertentu sehingga struktur seolah-olah mengalami kemiringan sebesar 0 – 3 derajat.

6. Condition Assesment Analysis

Tahap ini dilakukan untuk mengecek apakah terjadi penigkatan beban pada struktur atau tidak. Struktur dikakatkan perlu dilakukan analisis keruntuhan apabila telah terjadi peingkatan beban pada struktur meskipun dalam tahap kategorisasi dihasilkan bahwa struktur tidak mebutuhkannya. Hal ini di diidentifikasi dengan melihat nila *Unity Check* (UC) di member pada struktur. Analisis keruntuhan dilakukan pada kondis yang lebih dulu menimbulkan UC sama dengan 1.

7. Menentukan Sudut dan Kondisi Kritis

Sudut dan kondisi kritis ditentukan dengan melakukan analisis regresi pada nilai UC tiap kondisi kemiringan. Maka akan didapatkan nilai sudut dan P-d kritis.

8. Kategorisasi Platform

Kategorisasi platform dilakukan untuk menentukan nilai RSR minimum yang harus dimiliki suatu platform yang nantinya akan dijadikan acuan apakah suatu platform dikatakan masih layak atau tidak. Kategorisasi platform dilakukan denganmengklasifikasikan platform berdasarkan tingkat *life safety* dan konsekuensi dari kegagalan platform tersebut.

9. Analisis Keruntuhan *Jacket Platform* pada Kondisi Kritis.

Analisis ini digunakan untuk menemukan beban yang menyebabkan jacket platform *collapse*. Pada analisis ini nilai yang akan dicari berupa *base shear* pada struktur yang menyebabkan struktur *collapse*. Dari analisis ini akan didapatkan juga member yang mengalami plastisitas 100 % saat struktur *collapse*.

10. Analisis Keandalan Struktur

Analisis keandalan struktur dilakukan untuk meninjau adanya kemungkinan beban pada struktur melapaui kapasitas bebannya. Dari analisis ini akan dihasilakn peluang gagal dan peluang sukses dari struktur platform terhadap keruntuhan. Analisis keandalan akan dilakukan dengan menggunakan metode monte carlo.

11. Menentukan Kesimpulan

Kesimpulan yang akan ditarik pada analisis ini berupa nilai maksmum member stress check tiap kondisi dan kemiringan, sudut dan kondisi kritis platform, nilai RSR pada kondisi kritis dan keandalan struktur.

BAB IV

HASIL & PEMBAHASAN

4.1 Pengumpulan Data

4.1.1 Deskripsi *Platform*

Platform terdiri dari sebuah *caisson* berdiameter 56 inch yang disangga oleh dua *braced pile* dengan diamater 42 inch. *Caisson* akan digunakan sebagai *conductor casing* dan juga sebagai pondasi, koneksi antara *caisson* dan *deck leg* disambung dengan pengelasan. Terdapat *guardian sleeve* yang terdiri dari tiga struktur *leg tubular framed* sampai kedalaman 190 ft. Elevasi *working point* terletak pada (+) 15'-0". *Batter* antara *caisson* dan dua *braced piles* adalah 1:4. Konfigurasi deck didesain untuk menopang operasi *drilling* dengan *cantilever jack-up rig*. *Deck* terdiri dari empat level yaitu *main deck* (+) 65'-0", *mezzanine deck* (+) 53'-0", *cellar deck* 40'-0" dan *sub-cellar deck* (+) 24'-0". *Deck* mempunyai luasan 26 ft x 26 ft persegi. *Appurtenance* pada deck terdiri dari satu *crane pedestal*, dan *crane boom rest*, satu *vent boom* dan *utility room*. Data dari *platform* dapat dilihat pada table 4.1-4.4 dan untuk selengkapanya dapat dilihat di lampiran.

Tabel 4.1. Deskripsi *Jacket platform*

Jacket	
Type	*Braced Monopod Jacket*
Caisson	Satu (1) (56" dia.)
Braced Piles	Dua (2) (46" dia.)
Boatlanding	Dua (2)
Risers	Dua (2) (Satu (1) 6,625 " dia. dan satu (1) 8.625" dia.)
Risers Guard	Satu (1)
Conductors	Lima (5) (Tiga (3) 30" dia. outboard, satu (1) present conductors, dau (2) Future conductors dan dua (2) 14" dia pada Caisson

Tabel 4.2. *Appurtenance* pada *topside platform*

Topside	
Crane Pedestal	1
Crane Boom Rest	2
Vent Boom	1

Tabel 4.3. Elevasi *Platform*

Mudline Elevation	(-) 190'-0"
Jacket Elevation 1	(-) 130'-0"
Jacket Elevation 2	(-) 84'-0"
Jacket Elevation 3	(-) 61'-0"
Jacket Elevation 4	(-) 46'-0"
T.O.S. Main Boatlanding	(+) 6'-3 15/16"
T.O.S. Secondary Boatlanding	(+) 8'-6 15/16"
Top of Caisson	(+) 15'-0"
Sub-Cellar Deck	(+) 24'-0"
Cellar Deck	(+) 40'-0"
Mezzanine Deck	(+) 53'-0"
Main Deck	(+) 65'-0"

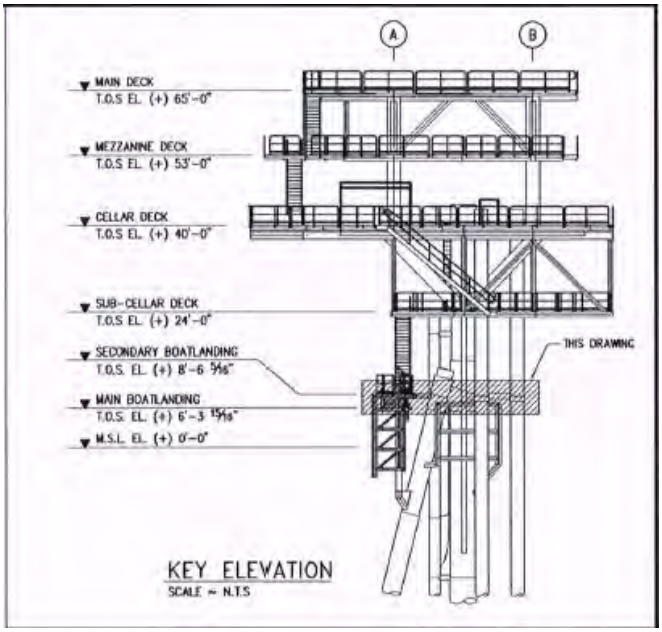

Gambar 4.1. *Topside Elevetion*

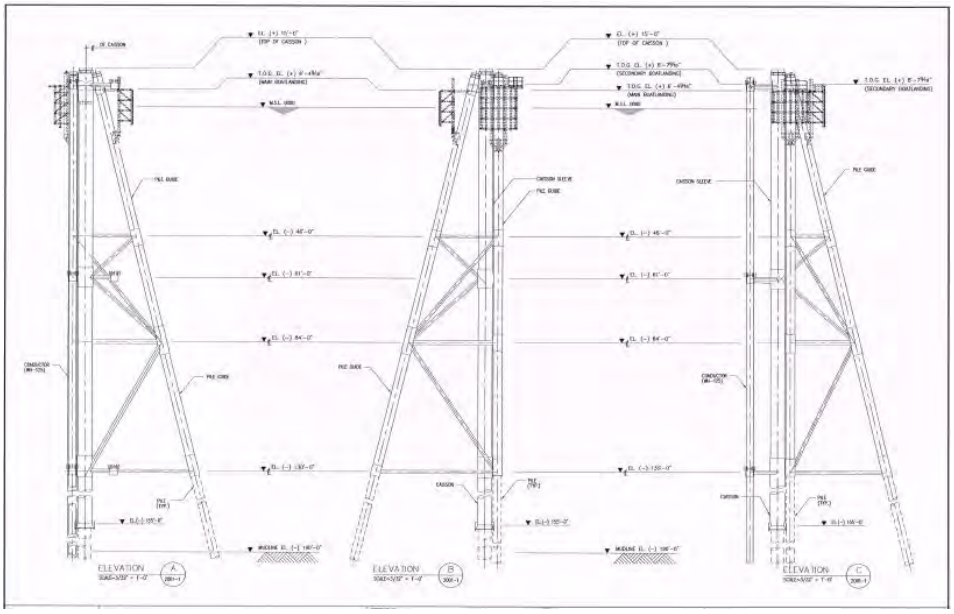

Gambar 4.2. *Jacket Elevation*

4.1.2 *Weight Calculation Report* (WCR)

WCR adalah data berat struktur dan perencanaan pembebanan yang akan dilakukan pada platform. WCR akan menjadi acuan penulis dalam memodelkan platform. WCR dapat dilihat pada tabel 4.4.

Tabel 4.4. WCR dari *platform*

No.	Deskripsi	WCR (Kips)
1	*Topside Structural Dead Load*	419,60
2	*Guardian Sleeve Structural Dead Load*	653,56
3	*Caisson and Batter Piles (above mudline)*	450,29
4	*Deck NGDL*	282,20
5	*Guardian Sleeve NGDL*	91,66
6	*Piping Opearting Load*	176,96
7	*Live Load*	540,00
8	*Mecahnical Operating Load*	283,72
9	*Electrical Load*	12,98
10	*Instrument Load*	7,05
Total		1949,105

4.1.3. Data Lingkungan

4.1.3.1. Kedalaman Perairan

Kedalaman perairan yang akan ditinjau pada analisis ini adalah kedalaman maksimum pada kondisi operasi dan badai yang akan dipaparkan pada tabel 4.5. berikut ini.

Tabel 4.5. Kedalaman Perairan

Deskripsi	Kondisi Analisis	
	Operasi	Badai
MSL	190,00 ft	190,00 ft
HHWL	2,49 ft	2,49 ft
LLWL	-	-
Storm Surge	1,11 ft	2,76 ft
Water Depth	193,60 ft	195,25 ft

4.1.3.2. Data Gelombang, Arus dan Angin

Data gelombang, arus dan angin yang akan dipakai dalam analisis adalah data dengan periode ulang 1 tahunan untuk kondisi operasi dan periode ulang 100 tahunan untuk kondisi badai yang dapat dilihat pada tabel 4.6. – 4.8.

Tabel 4.6. Data Gelombang

Periode Ulang	Tinggi Gelombang Max.	Periode Gelombang Max.
1- Year	12,60 ft	5,82 Sec
100-Year	30,64 ft	9,16 Sec

Tabel 4.7. Data Arus

Persentase Kedalaman dari *seabed*	Ksecepatan Arus *(ft/sec)*	
	1-Year	***100-Year***
0	1,313	2,362
10	1,502	2,702
20	1,658	2,983
30	1,757	3,161
40	1,831	3,293
50	1,890	3,400
60	1,940	3,490
70	1,983	3,567
80	2,021	3,636
90	2,056	3,698
100	2,087	3,754

Tabel 4.8. Data Angin

Periode Ulang	Kecepatan Angin (miles/hour)
1-Year	29,08
100-Year	43,11

4.1.3.3. Parameter-parameter lainnya

Selain parameter yang telah disebutkan diatas, terdapat juga beberapa parameter yang akan ikut ditinjau dalam analisis dan sudah diatur oleh *standard* dan *code*. Parameter-parameter tersebut ialah koefisien hidrodinamika, *current blockage factor*, ketebalan *marine growth*, *allowable vertical displacement* dan *corrosion allowance* yang diapaparkan pada tabel 4.9. - 4.14.

Tabel 4.9. Koefisien Hidrodinamika

Deskripsi	Cd	Cm
Tubular Smooth	0,65	1,60
Tubulat member rough	1,05	1,20

Tabel 4.10. *Current Blockage Factor*

Heading	Factor
All	1,0

Tabel 4.11. Marine Growth

Lokasi	***Thickness* (in)**	***Density* (lb/ft3)**
MSL to EL. (-) 20'-0"	4,0	87,4
EL (-) 20'-0" to EL. (-) 120'-0"	2,0	87,4
EL (-) 120'-0" to Mudline	1,0	87,4

Tabel 4.12. *Allowable Stresses*

Condition		***Allowable Stress***
Inplace	*1-Year Operating*	1,000
	100-Year Storm	1,333

Tabel 4.13. *Allowable Vertical Displacement*

Deskripsi	***Allowable Vertical Displacement***
Floor beam primary	L/300
Secondary structure	L/200
Plating (thickness)	T (t = Thickness)
Equipment support	L/500
Cantilever beam	L/100

Tabel 4.14. *Corrosion Allowance*

Corosion Allowance	¼ Inch

4.2. Pemodelan Struktur

Model struktur dari *platform* dibuat berdasarkan drawing dengan menggunakan *software* SACS. Pemodelan dilakukan pada setiap member pada

topside, jacket dan *appurtenance*. Sedangkan *non-generated load* dimodelkan dalam bentuk beban. Model dari platform bias dilihat pada gambar 4.3 sebagai berikut.

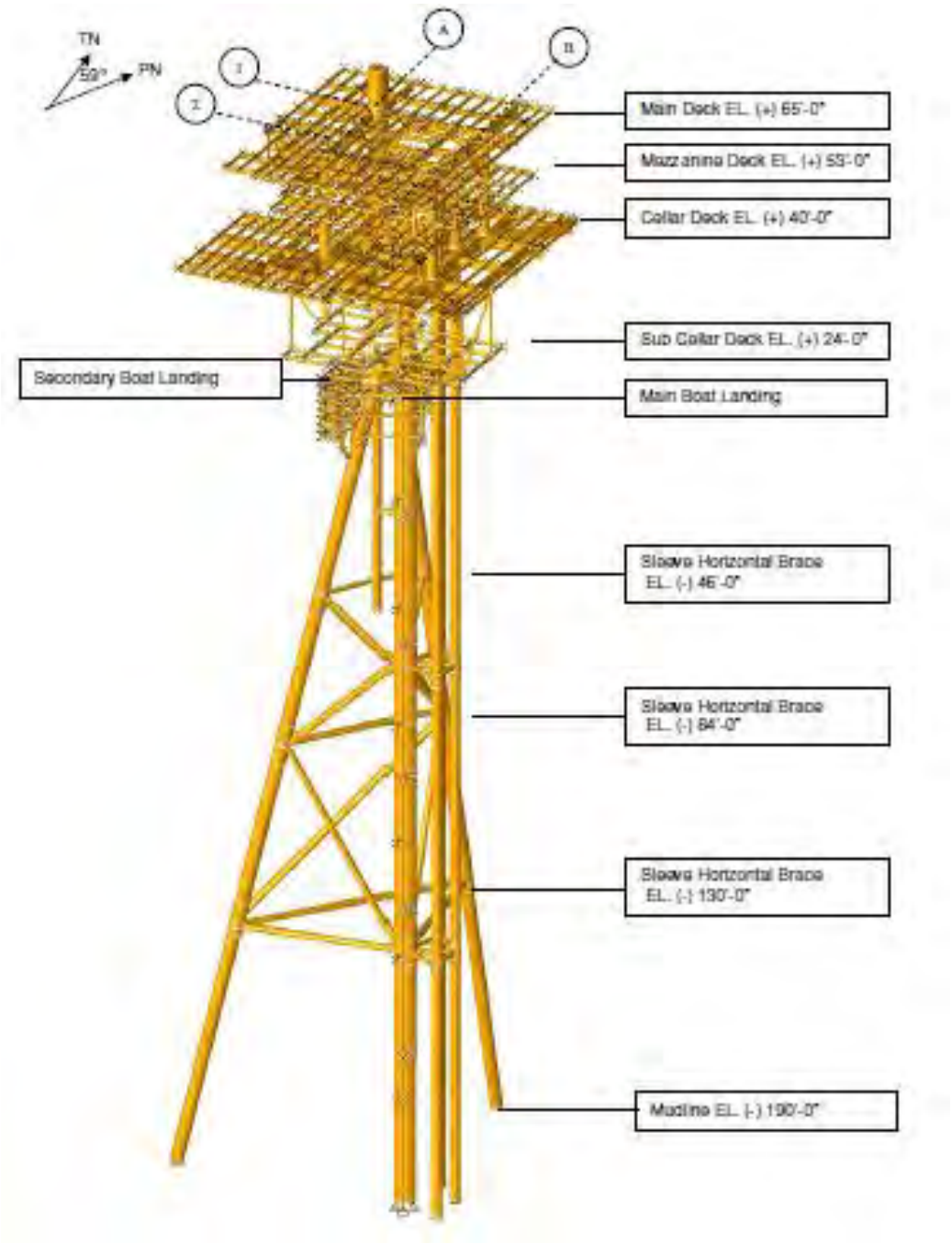

Gambar 4.3. Model *platform* pada software SACS

Tabel 4.15. *Member Group Fix Letter*

Deskripsi	Goup Pre-Fix Letter
Main Deck	MD
Mezzanine Deck	MZ
Cellar Deck	CD
Sub Cellar Deck	SC
Deck Leg	DL, DSP
Deck Diagonal Bracing	BRC, HG
Caisson Sleeve	SL
Pile Sleeve	PJ
Guardian Sleeve Horizontal Framing	H0
Guardian Sleeve Diagonal Bracing	A, X
Caisson Pile	PL
Battered Pile	LP
Boatlanding	BL
Riser	RS
Riser Support	SP
Conductor	CND
Boat Landing	BL

Sementara itu sistem koordinat global yang dipakai pada pemodelan ini adalah sebagai berikut:

Arah X positif adalah arah timur platform

Arah Y positif adalah arah utara platform

Arah Z positif adalah arah vertikal ke atas platform

4.3. Validasi Model

Validasi dilakukan dengan membandingkan *weight calculation report* (WCR) dengan beban pada model SACS (*SACS load*).

Tabel 4.16. Perbanding WCR dengan SACS load

No.	Deskripsi	*WCR* (Kips)	*Basic SACS Load* (Kips)	Faktor Kontingensi	*Analysis Load* (Kips)
1	*a. Topside Structural Dead Load*	419,600	1404,109	1,1	1544,520
	b. Guardian Sleeve Strcutural Dead Load	653,560			
	c. Caisson and Batter Piles (above mudline)	450,290			
2	*Deck Non- Genenrated Dead Load*	282,200	245,71	1,1	270,281
3	*Guardian Sleeve Non-Generated Dead Load*	91,660	77,86	1,1	85,646
4	*Piping Operating Load on Main Deck*	176,960	15,86	1,1	17,446
5	*Piping Operating on Mezzanine Deck*		40,02	1,1	44,022
6	*Piping Operating on Cellar Deck*		77,2	1,1	84,92
7	*Piping Operating on Sub Cellar Deck*		30,93	1,1	34,023
8	*Live Load on Open Area Main Deck*	540,000	540,296	1,0	540,296
9	*Live Load on Laydown Area Main Deck*				
10	*Live Load on Escape Route Area Main Deck*				
11	*Live Load on Open Area Mezzaninen Deck*				
12	*Live Load on Open Area Cellar Deck*				
13	*Live Load on Laydown Area Cellar Deck*				
14	*Live Load on Escape Route Area Cellar Deck*				
15	*Live Load on Open Area Sub Cellar Deck*				
16	*Live Load on Laydown Area Sub Cellar Deck*				
17	*Live Load on Escape Area Sub Cellar Deck*				
18	*Live Load on Open Area Boat Landing*				
19	*Mechanical Operating Load*	283,720	251,76	1,1	276,936
21	*Electrical Load*	12,980	18,37	1,1	20,207
22	*Instrumental Load*	7,050	4,77	1,1	5,247
Total		2918,020	2706,885		2923,544

Proses validasi dilakukan sebagai berikut

$$\%\ Error = \left|\frac{WCR - Analysis\ Load}{WCR}\right| = \left|\frac{2918{,}02 - 2923{,}544}{2918{,}02}\right| = 0{,}19\%$$

Dari hasil validasi diketahui error sebesar 0,19 % dan dari hasil ini didapatkan proses pemodelan sukses dan analisis bisa dilanjutkan.

4.4. Pemodelan Kemiringan Struktur

Pemodelan dilakukan dengan menggunakan skema perubahan COG akibat kemiringan. Dari hasil perpindahan COG ini akan ada penambahan momen yang disebut sebagai P-Δ momen. Dari perhitunng P-Δ momen, akan didapatkan besar beban yang harus ditambahkan pada struktur yang akan membuat perubahan COG pada struktur dan dapat mewakili kondisi kemiringan pada struktur. Skema perubahan COG di hitung dengan menggunakan persamaan rotasi titik terhadap titik dengan persamaan sebagai berikut.

$$\begin{bmatrix} X' \\ Z' \end{bmatrix} = \begin{bmatrix} (x-a) & -(z-b) \\ (z+b) & (x-a) \end{bmatrix} \begin{bmatrix} \cos\theta \\ \sin\theta \end{bmatrix} + \begin{bmatrix} a \\ b \end{bmatrix} \tag{4.1}$$

Titik (X,Z) adalah titik COG awal, titik (X',Z') adalah titik COG baru akibat kemiringan struktur, titik (a,b) adalah titik pusat rotasi yang merupakan joint terbawah dari *braced pile* dan θ adalah sudut kemiringan. Dari analisa tersebut maka dihasilkan titik COG baru dan perubahan titik COG (Δ). Pada analisis ini hanya momen akibat perubahan COG di sumbu X yang akan ditinjau. Karena kemiringan yang terjadi diasumsikan hanya rotasi pada sumbu Y. Nilai dari COG awal, perubahannya dan nilai Δx diapaparkan pada tabel 4.16 dan 4.17.

Tabel 4.17. Titik putar COG awal dan beban vertikal struktur

Kondisi	Titik Pusat Putar		Titik COG		Vertical Load (kips)
	a (ft)	b (ft)	Xo (ft)	Zo (ft)	
Operasi	-54,183	-190	-4,99	10,45	-2654,02
Badai	-54,183	-190	-4,990	10,450	-2654,020

Tabel 4.18. Nilai Δx pada tiap kemiringan dan kondisi

Nilai Δx (ft)							
Kondisi	Degree						
	0	0,5	1	1,5	2	2,5	3
Operasi	0	1,746	3,489	5,228	6,962	8,692	10,418
Badai	0	1,746	3,489	5,228	6,962	8,692	10,418

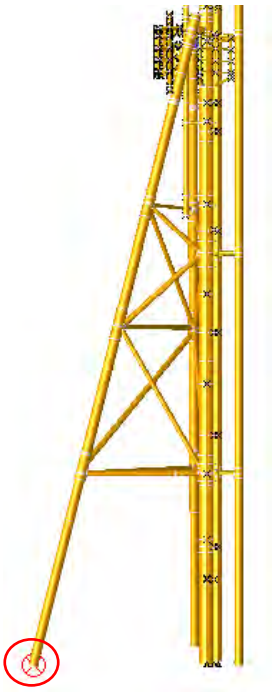

Gambar 4.4 Titik Pusat Rotasi

Setelah nilai Δx didapatkan, maka akan didapatkan nilai P-Δ, Berikut adalah hasil P-Δ tiap variasi kemiringan.

Tabel 4.19. Nilai P-Δx pada variasi kemiringan dan kondisi

Nilai P-Δx (ft-kips)		
Deg	**Operasi**	**Badai**
0	0	0
0,5	4635	4635
1,0	9260	9260
1,5	13874	13874
2,0	18478	18478
2,5	23070	23070
3,0	27650	27650

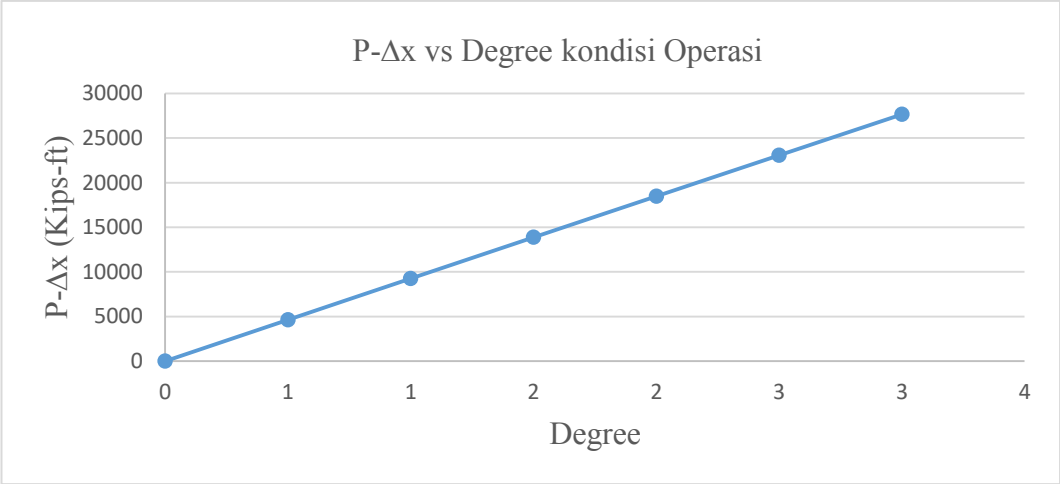

Gambar 4.5. Hubungan P-Δx tiap variasi sudut pada kondisi operasi

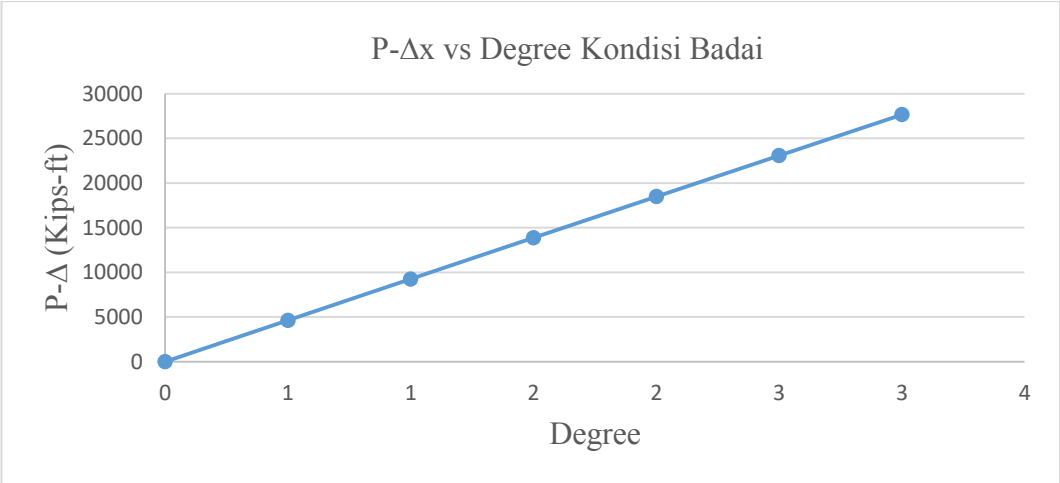

Gambar 4.6. Hubungan P-Δx tiap variasi sudut pada kondisi badai

Nilai P-Δx ini yang akan memberikan tambahan beban pada struktur miring dan selanjtnya akan menambah tegangan pada setiap member struktur.

4.5. *Condition Assesment Analysis*

Pada tahap ini akan dilakukan analisis *inplace* pada setiap kondisi dan pada tiap derajat kemiringan. Analisis *inplace* dilakukan dengan menggunakan *software* pemodelan dan analiis struktur SACS. Pada tahap ini akan diambil nilai *unity check* maksimum pada struktur dan kita juga akan mendapatkan hubnungan antara kemiringsn nilai tambahan momen yang ditambahkan dan UC seperti yang dipaparkan pada table 4.20 dan 4.21.

Tabel 4.20. Nilai UC maksimum dan tambahan momen (P-ΔX) tiap derajat kemiringan pada kondisi operasi

Operasi		
Deg.	P-d (ft-kips)	UC
0,0	0	0,837
0,5	4635	1,047
1,0	9260	1,046
1,5	13874	1,046
2,0	18478	1,047
2,5	23070	1,330
3,0	27650	1,634

Tabel 4.21. Nilai UC maksimum dan tambahan momen (P-ΔX) tiap derajat kemiringan pada kondisi badai

Badai		
Deg.	P-d (ft-kips)	UC
0,0	0	0,720
0,5	4635	0,720
1,0	9260	0,720
1,5	13874	0,720
2,0	18478	0,720
2,5	23070	1,106
3,0	27650	1,355

4.6. Menentukan Kondisi Kritis pada Platform

Penentuan kondisi kritis pada platform dilakukan dengan melakukan analisis regresi pada nilai UC terhadap derajat kemiringan dan nilai P-Δ. Jenis regresi yang dipilih adalah regresi eksponensial. Kondisi kritis didefinisikan sebagai kondisi kemiringan dengan nilai P-Δ tertentu yang akan membuat nilai UC maksimum sama dengan 1. Analisis regresi dilakukan dengan bantuan *software* Microsoft Ecxell dan dari analisis regresi ini akan didapatkan persamaan hubungan antara UC dengan derajat kemiringan dan nilai P-Δ sebagai berikut.

$$UC = 0{,}8565\, e^{0{,}1776\, Deg} \qquad \text{(Kondisi Operasi)} \qquad (4.2)$$

$$UC = 0{,}8561\ e^{2E-5\ P-\Delta} \qquad \text{(Kondisi Operasi)} \qquad (4.3)$$

$$UC = 0{,}6237\ e^{0{,}1968\ Deg} \qquad \text{(Kondisi Badai)} \qquad (4.4)$$

$$UC = 0{,}6236\ e^{2E-5\ P-\Delta} \qquad \text{(Kondisi Badai)} \qquad (4.5)$$

Kurva regresi dari nilai UC terhadap derajat kemiringan dan nilai P-Δ akan disajikan pada gambar 4.10 – 4.17

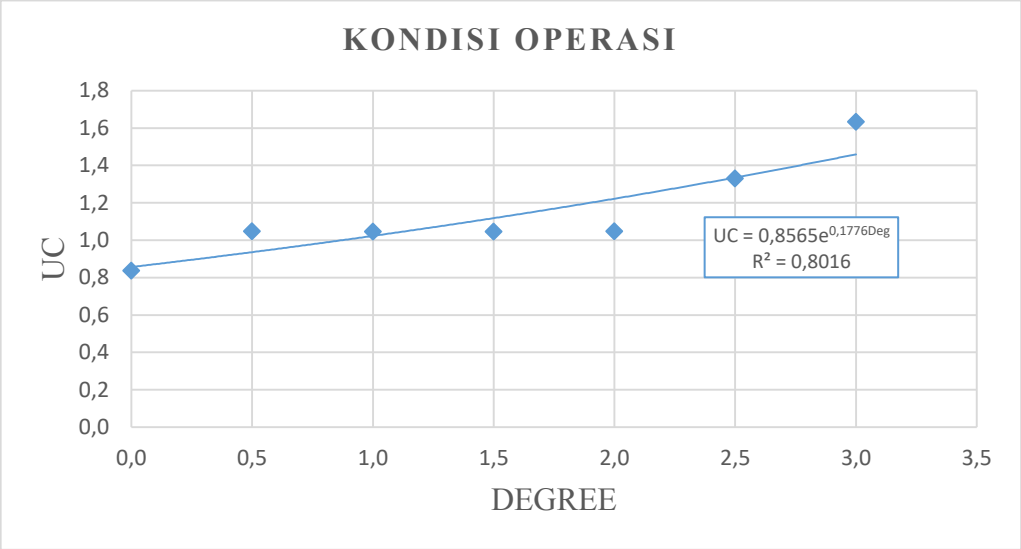

Gambar 4.7. Kurva regresi nilai UC terhadap kemiringan kondisi Operasi

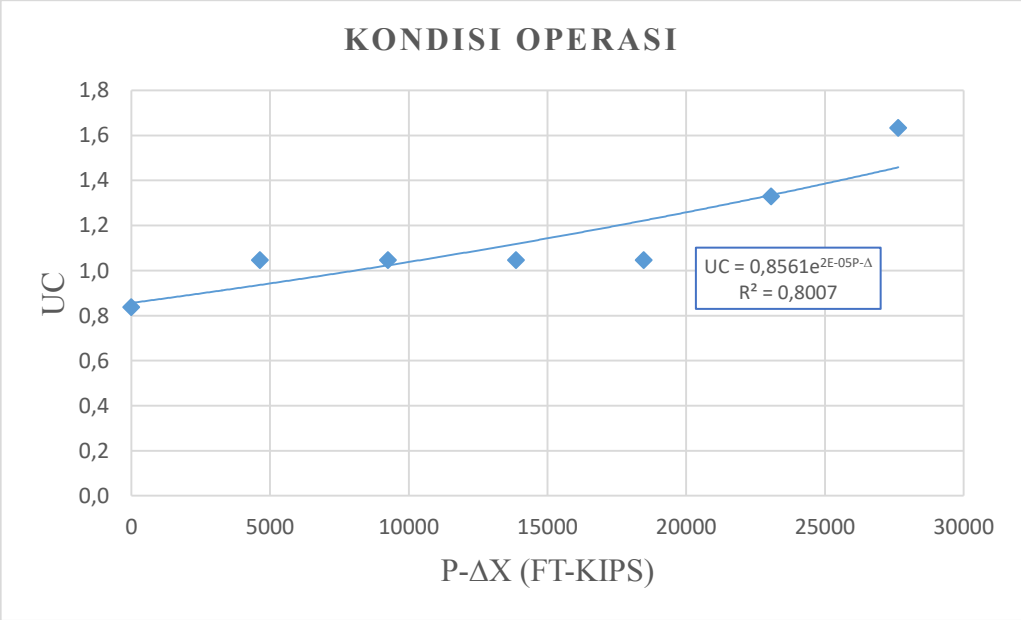

Gambar 4.8. Kurva regresi nilai UC terhadap nilai P-Δx kondisi Operasi

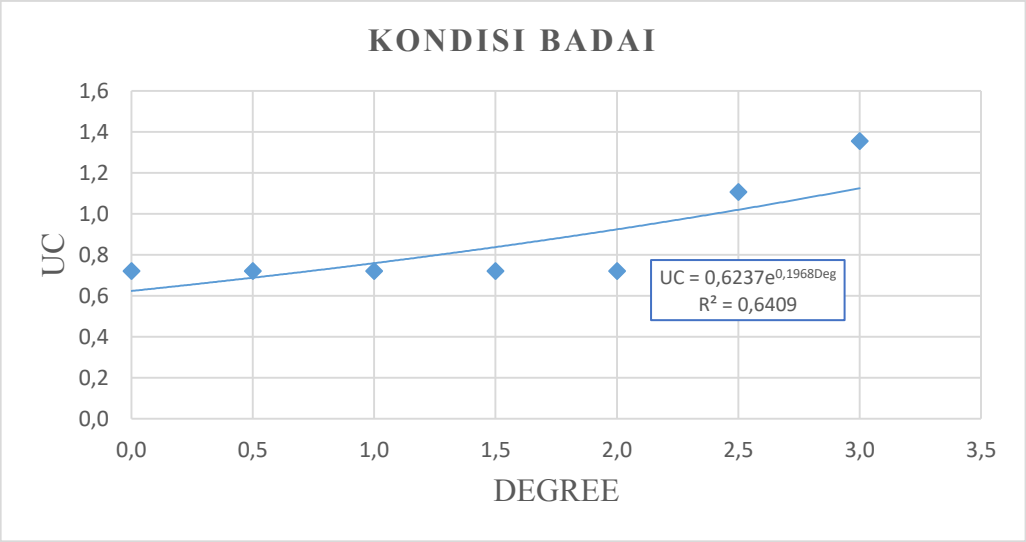

Gambar 4.9. Kurva regresi nilai UC terhadap kemirngan kondisi Badai

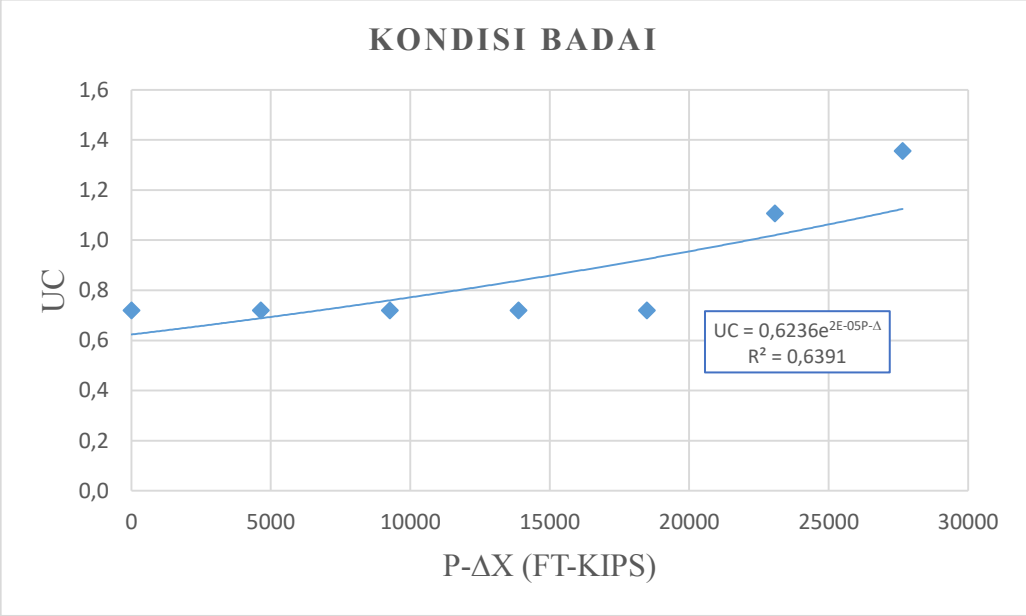

Gambar 4.10. Kurva regresi nilai UC terhadap nilai P-Δx kondisi Badai

4.7. Menentukan Kondisi Kritis *Platform*

Kondisi kritis platform didefinisikan sebagai kondisi pembebanan pada derajat kemiringan tertentu yang menimbulkan nilai UC sama dengan 1. Kondisi ini didapat dari perhitungan dengan persamaan regresi yang telah didapat pada langkah sebelumnya. Pertama-tama sudut kritis pada tiap kondisi akan dihitung, lalu kondisi kritis ditentukan berdasarkan nilai sudut terkecil. Paparan dari nilai

sudut dan nilai P-Δx kritis dari masing-masing kondisi akan dipaparkan pada tabel 4.20. sebagai berikut.

Tabel 4.22. Nilai sudut dan P-Δx kritis pada tiap kondisi

Critical Condition Condition		
Condition	**Critical Degree**	**Nilai P-Δx (ft-kips)**
Operasi.	0,832	8815
Badai	2,202	21055

Dari hasil ini akan didapatkan jika kondisi kritis pada platform terdapat pada kondisi pembebanan operasi dengan kemiringan 0,832 derajat dengan nilai P-Δ sebesar 8815 ft-kips. Kondisi inilah yang akan ditinjau dengan melakukan analisis keruntuhan dan analisis keandalan.

4.8. Kategorisasi *Platform*

Kategorisasi platform dilakukan dengan malakukan klasifikasi berdasarkan tingkat *life safety* dan konsekuensi dari kegagalan *platform* tersebut. Dari segi *life safety*, *platform* didesain sebagai *unmanned platform*, maka dari segi *life safety platform* berada pada level S-3. Sementara itu mengacu pada API RP 2A WSD, PHE-12 bisa dikategorikan sebagai platform yang memiliki konsekuensi sedang (*high consequences*) atau C-1 karena platform dapat di *shut-down* ketika terjadi bahaya dan *platform* berada pada kedalam diatas 100 ft. Dari hasil kategorisasi ini, didapatkan *exposure level* platform pada kondisi L-1 seperti yang akan dipaparkan pada table berikut.

Tabel 4.23. *Exposure Level*

Life Safety Category	***Consequence category***		
	CI	**C2**	**C3**
S1	L1	L1	L1
S2	L1	L2	L2
S3	L1	L2	L3

Berdasarkan API RP 2A WSD, platform dengan kategori L-1 harus mempunyai nilai RSR lebih besar dari 1,6 berdasarkan penjelasan pada subab 2.6.

4.9. Analisis Keruntuhan

Analisis keruntuhan dilakukan pada kondisi kritis untuk menentukan nilai RSR. RSR *(Reserve Strength Ratio)* adalah perbandingan antara *base shear* saat kondisi yang menyebabkan keruntuhan dibanding dengan *base shear* saat kondisi kritis. Analisis keruntuhan dilakukan pada masing-masing arah pembebanan untuk menentukan arah pembebanan yang paling cepat menyebakan keruntuhan dengan melihat nilai RSR terkecil. Nilai RSR ini akan kita bandingkan dengan nilai RSR minimum yang harus dimiliki sebuah *platform* dari hasil proses kategorisasi *platform* yang sudah dilakukan sebelumnya. Analisis keruntuhan dilakukan dengan bantuan *software* pemodelan dan analisis struktur SACS. Pada analisis keruntuhan akan dilakukan *increment* pada beban lingkungan berupa beban angin, gelombang dan arus kondisi operasi sampai struktur runtuh *(collapse)*. Nilai *base shear* dan RSR dari masing-masing arah pembebaban pada kondisi operasi dapat dilihat pada tabel 4.21. sebagai berikut.

Tabel 4.24. Nilai *base shear* dan RSR pada masing-masing arah pembebanan kondisi operasi

Arah Pembebanan (Deg)	Base Shear Kondisi Awal (kips)	Base Shear Kondisi Runtuh (kips)	RSR
0	104,89	2127,92	20,29
30	105,57	2309,74	21,88
60	106,05	2749,62	25,93
90	106,82	1732,33	16,22
120	106,42	1827,06	17,17
150	104,48	1867,06	17,87
180	101,15	1732,97	17,13
210	96,47	1894,19	19,64
240	93,80	2514,50	26,81
270	94,43	2163,23	22,91
300	97,09	2283,56	23,52
330	101,13	2308,76	22,83

Dari analisis keruntuhan ini didapatkan bahwa arah pembebaban kritis pada kondisi operasi adalah arah pembebaban 90 derajat dengan nilai *base shear* awal 106,82 kips dan *base shear* saat *collapse* 1732,33 kips dan nilai RSR sebesar 16,22. Dari hasil analisis keruntuhan ini, didapatkan bahwa *platform* memiliki nilai RSR yang cukup pada kondisi kritis yang artinya struktur *platform* masih layak untuk menunjang segala beban saat operasi.

4.10. Analisis Keandalan

Analisis keandalan dilakukan pada member-member jacket yang mengalami plastisitas maksimum. Nilai keandalan didapat dengan membandingkan tegangan Von Mises dan tegangan ultimatnya.

$$\sigma_{VM} = \sqrt{\frac{1}{2}[(\sigma_{xx} - \sigma_{yy})^2 + (\sigma_{yy} - \sigma_{zz})^2 + (\sigma_{zz} - \sigma_{xx})^2 + 6(\sigma_{yz}{}^2 + \sigma_{xz}{}^2)]} \quad (4.6)$$

$$z = \frac{\sigma_{VM}}{\sigma_u} \quad (4.7)$$

Kegagalan didefinisikan ketika nilai z ≤ 1 dan simulasi dilakukan dengan simulasi monte carlo. Yang dibutuhkan untuk analisis ini adalah data tegangan prinsipal pada member-member yang mengalami plastisitas maksimum dan nilai tegangan yieldnya. Nilai tegangan prinsipal yang terjadi pada member didapatkan dari hasil analisis keruntuhan oleh SACS yang akan dipaparkan pada table 4.25.

Tabel 4.25. Nilai tegangan aktual pada member dan nilai tegangan yieldnya

Member JA -JB	σ_{xx} (ksi)	σ_{yy} (ksi)	σ_{zz} (ksi)	σ_{xz} (ksi)	σ_{yz} (ksi)	σ_u (ksi)
403- 402	50,040	1,160	1,030	0,200	0,220	65
102- 292	1,290	20,420	6,480	3,780	15,590	65
392- 492	16,220	34,960	7,050	0,560	1,780	65
792- 802	8,890	42,590	30,820	10,980	17,070	65
302- 402	51,950	1,060	0,780	0,320	0,470	65
702- 802	8,780	40,960	35,120	13,770	17,260	65

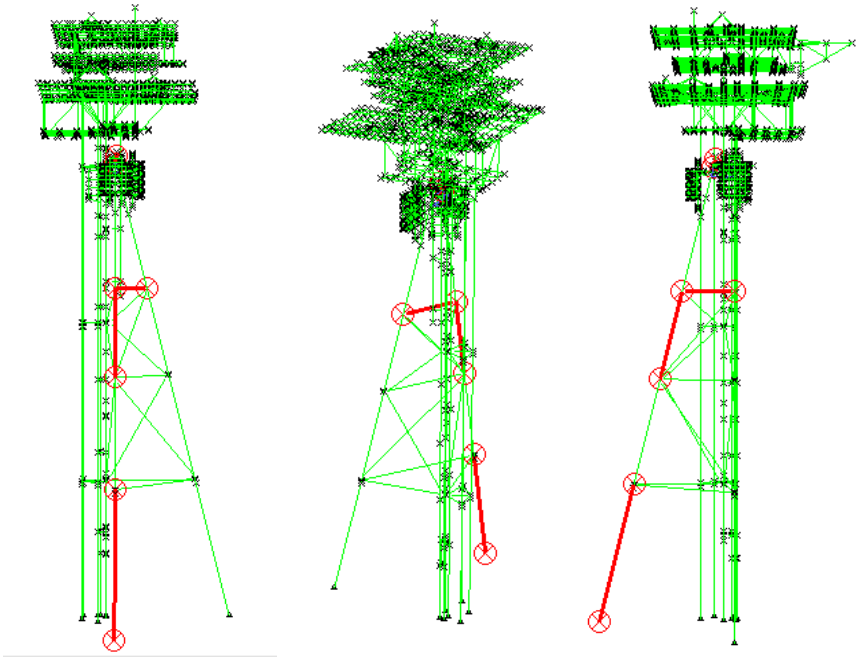

Gambar 4.11. Letak member-member yang mengalami plastisitas

Nilai tegangan pada tabel 4.25 akan menjadi rata-rata pada perhitungan keandalan. Setealah itu akan dicari nilai standar deviasi dari data tegangan tersebut dengan mengalikannya dengan CoV. CoV untuk beban adalah 0,3 dan untuk kapasitas adalah 0,15 yang akan dipaparkan sebagai berikut.

Tabel 4.26. Variabel acak

Deskripsi	**Distribusi**	**Cov**
σ_{xx}	Normal	0,3
σ_{yy}	Normal	0,3
σ_{zz}	Normal	0,3
σ_{yz}	Normal	0,3
σ_{xz}	Normal	0,3
σ_{u}	Normal	0,15

Setelah nilai CoV dan jenis distribusi ditentukan, maka nilai standar deviasi bias kita cari dan dipaparkan pada table 4.27 berikut.

Tabel 4.27. Nilai standar deviasi dari tegangan aktual dan kapasitas

Member JA -JB	σ_x (ksi)	σ_y (ksi)	σ_z (ksi)	σ_{xz} (ksi)	σ_{zy} (ksi)	σ_u (ksi)
403- 402	15,012	0,348	0,309	0,06	0,066	9,75
102- 292	0,387	6,126	1,944	1,134	4,677	9,75
392- 492	4,866	10,488	2,115	0,168	0,534	9,75
792- 802	2,667	12,777	9,246	3,294	5,121	9,75
302- 402	15,585	0,318	0,234	0,096	0,141	9,75
702- 802	2,634	12,288	10,536	4,131	5,178	9,75

Setelah nilai standar deviasi didapatkan , maka akan dilakukan perhitungan keandalan dengan menggunakan simulasi monte carlo dengan 1000 kali simulasi. Maka akan didapatkan nilai keandalan dari masing-masing member yang akan dipaparkan pada tabel 4.28.

Tabel 4.28. Nilai keandalan tiap member

Member JA -JB	Keandalan	PoF
403- 402	0,805	0,195
102- 292	0,993	0,007
392- 492	0,997	0,003
792- 802	0,338	0,662
302- 402	0,805	0,195
702- 802	0,842	0,158

Ketika keandalan dari masing-masing member sudah diketahui, maka selanjutnya akan dicari keandalan gabungan dari struktur. Untuk menghitung keandalan gabungan tersebut, kita harus mencari hubungan antar member-member yang mengalami plastisitas tersebut terhadap keruntuhan.

Pada tugas akhir ini hubungan antara member-member yang mengalami plastisitas ditinjau dari hasil analisis keruntuhan dari SACS dengan melihat runtutan kegagalan member tehadap struktur seperti yang akan diapaparkan pada tabel 4.29. berikut ini.

Tabel 4.29. Runtutan kegagalan member

Load Inc.	Load Factor	Member JA -JB
81	15,83	792- 802
82	16,02	792- 802
83	16,21	792- 802
84	16,4	792- 802
85	16,59	792- 802
86	16,78	792- 802
87	16,97	102- 292
87	16,97	792- 802
88	17,16	102- 292
88	17,16	792- 802
88	17,16	702- 802
89	17,35	403- 402
89	17,35	102- 292
89	17,35	392- 492
89	17,35	792- 802
89	17,35	302- 402
89	17,35	702- 802

Dari hasil analisis keruntuhan bias kita lihat bahwa member 792-802 adalah member yang pertama kali gagal pada load increment 81 dikuti oleh member 102-291 dan 702-802 pada increment 87 dan 88, setelah itu member 403-402, 392-492, dan 302-402 gagal bersamaan pada increment 89 bersamaan dengan runtuh ya struktur. Maka hubungan dari member-member tersebut adalah terdapat empat sistem kegagaln seri yaitu pada increment 81, 87, 88, dan 89. Tiga member yang gagal pada increment 89 dianggap memiliki hubungan parallel. Untuk lebih jelasnya hubungan keandalan member-member tersebut bias di gambarkan pada diagram berikut ini.

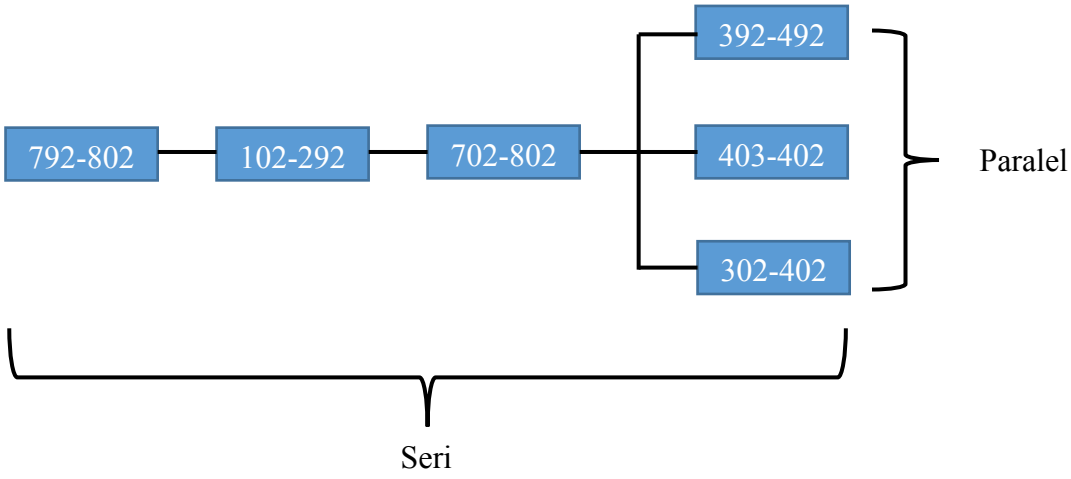

Gambar 4.12. Hubungan keandalan tiap member

Dari skema pada gambar 4.12, maka persamaan keandalan gabungan struktur dapat ditulis sebagai berikut.

$$Ks = K_{792-802}\ x\ K_{102-292}\ x\ K_{702-802}\ x\ (1 - PoF_{392-492}\ x\ PoF_{403-402}\ x\ PoF_{302-402})$$

$$Ks = 0{,}805\ x\ 0{,}993\ x\ 0{,}997\ x\ (1 - 0{,}662\ x\ 0{,}195\ x\ 0{,}158)$$

$$Ks = 0{,}7807$$

$$PoFs = 1 - Ks = 0{,}2193$$

Dari perhitungan keandalan didapatkan nilai keandalan struktur 0,7807 dan nilai peluang kegagalan struktur (PoF) 0,2193 yang berarti struktur masih handala karena nilai keandalan lebih besar dari nilai peluang kegagalan struktur.

Selanjutnya adalah mencari nilai indeks keandalan, indeks keandalan dicari dengan mencari nilai rata-rata dan standar deviasi dari nilai mode kegagalan, selanjutnya nilai indeks keandalan dicari dengan persamaan 2.53. Nilai Indeks keandalan dari masing-masing member akan dipaparkan pada tabel 4.30.

Tabel 4.30. Nilai indeks keandalan dari masing-masing member

Member JA -JB	Indeks Keandalan
403- 402	2,045
102- 292	3,250
392- 492	1,592
792- 802	4,050
302- 402	1,762
702- 802	4,248

Dari hasil perhitungan indeks keandalan didapatkan nilai indeks keandalan terkecil sebesar 1,592 yaitu pada member 392-492. Dari hasil indeks keandalan didapatkan bahwa struktur belum cukup handal karena memiliki nilai indeks keandalan dibawah dua yang artinya nilai *safety margin* tidak cukup konsisten.

BAB V

KESIMPULAN DAN SARAN

5.1. Kesimpulan

1. Kondisi kritis *platform* adalah pada kondisi operasi dengan kemiringann 0,872 derajat dan nilai tambahan momen sebesar 8815 ft-kips.

2. Nilai RSR *platform* pada kondisi kritis adalah 16,22 dengan nilai *base shear* awal 106,82 kips dan *base shear* saat *collaps*e 1732,33 kips pada arah pembebabnan 90 derajat yang menyatakan *platform* masih layak karena diatas nilai standar RSR platform sebesar 1,6.

3. Nilai keandalan struktur terhadap keruntuhan pada kondisi kemiringan kritis adalah 0,7807 yang berarti struktur bisa dianggap handal namun dari segi nilai indeks keandalan struktur didapatkan nilai 1,592 yang diambil dari nilai indeks keandalan member 392-492 yang menyatakan nilai keandalan belum mempunyai jaminan yang cukup.

5.2. Saran

1. Pada penelitian selanjutnya disarankan untuk memperbanyak variasi kemiringan agar didapatkan hasil regresi yang lebih teliti.

2. Pada penelitian selanjutnya disarankan untuk memakai *second order P-δ* dalam pemodelan kemiringan agar tegangan yang dihasilkan lebih bisa mewakili dari kondisi platform miring tersebut.

3. Pada penelitian selanjutnya disarankan untuk menganalisis tegangan dengan metode analisis lokal untuk mendapatlan hasil yang lebih baik.

4. Pada penelitian selanjutnya disarankan untuk menggunakan membandingkan berbagai metode keandalan.

(Halaman ini sengaja dikosongkan)

DAFTAR PUSTAKA

Ainillah, Shaila. 2017. *Analisa Ultimate Strength Struktur Jacket Platform Berbasis Keandalan Pasca Subsidence.* Surabaya: Jurnal Tugas Akhir Departemen Teknik Kelautan ITS.

American Institute of Steel Constructions. 2010. *Specification for Structural Steel Building*. Chicago : API.

American Petroleum Institute. 2002. *Recomended Practice for Planning, Designing and Construction Fixed Offshore Platform, Working Stress Design*. Washington DC : API.

American Standard of Testing Material. 2015. *Standard Specification for Carbpn Structurak Steel*. West Consohocken : ASTM International.

Azmi, Fatih. 2016. *Analisa Resiko Keruntuhan Struktur Jacket Breasting Dolphin Akibat Penambahan DWT Kapal Tanker*. Surabaya : Jurnal Tugas Akhir Departemen Teknik Kelautan ITS.

Braja M. Das. 2008. *Advance Soil Mechanics*. New York : Taylor & Francis.

Davidson, B.J., Fenwick, R.C., Chung, B.T. *P-delta effects in multi-storey structural design*. Rotterdam: Earthquake Engineering, Tenth World Conference.

Djatmiko. 2014. Gaya Gelombang pada Struktur Langsing Terpancang. Surabaya : Institut Teknologi Sepuluh Nopember.

International Standardization Organization 19902. 2007. *International Standard Petroleum and Natural Gas Industries Fixed Steel Offshore Structures*. Switzerland : ISO.

Nizamani, Zafarullah. 2015. *Environmental Load Factors and System Strength Evaluation of Offshore Jacket Platforms*. Switzerland: Springler.

Pratama, Widi Chalbi. 2013. *Analisis Ultimate Strength Struktur Jacket Platform Berbasis Keandalan dengan Variasi Jenis Tanah.* Surabaya : Jurnal Tugas Akhir Departemen Teknik Kelautan ITS.

Popov, E.P. 1984. *Mekanika Teknik*, Jakarta : Erlangga.

Robayasa, Nasta Ina. 2012. *Analisa kekuatan Ultimate Strength Jacket Well Tripod Platform Berbasis Resiko*. Surabaya: Jurnal Tugas Akhir Departemen Teknik Kelautan ITS.

Rosyid, D. M. 2007. *Pengantar Rekayasa Keandalan*. Surabaya : Airlangga University Press.

Skjelbreia, L., Hendrickson, J. 1958. *Fifth Order Gravity Wave Theory*. California : National Engineering Science Company.

S. K. Chakrabharti. 2005. *Handbook of Offshore Engineering*. Amsterdam : Elsevier.

S. K. Chakrabharti. 1987. *Hydrodynamic of Offshore Structure*. Berlin : Springler Verlag.

Y. Murotsu dkk. 1984. Probabilistic Collapse Analysis of Offshore Structure. Texas : The 4th International Symposium on Offshore Mechanics and Artic Engineering.

LAMPIRAN 1

DRAWING DARI *PLATFORM*

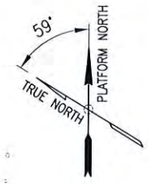

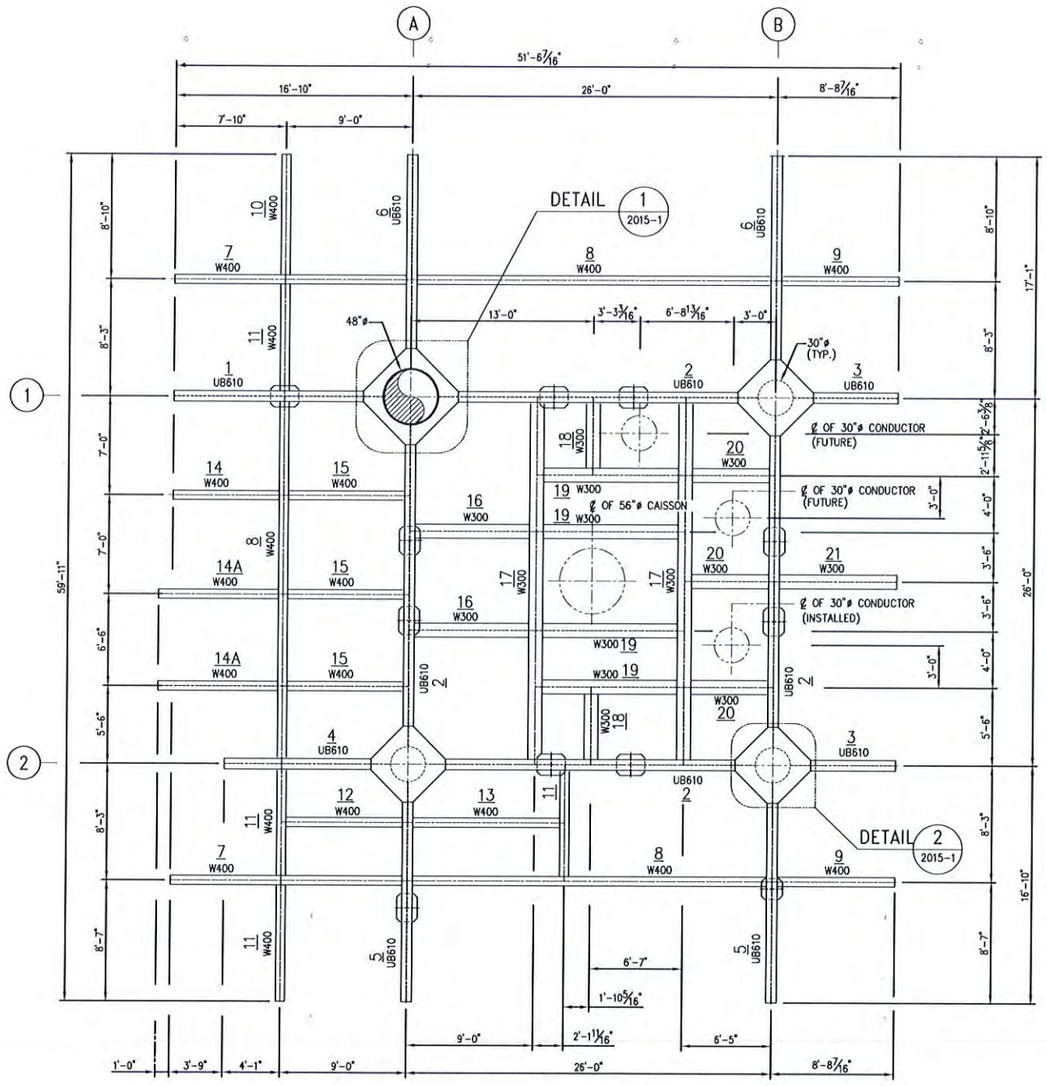

MAIN DECK PRIMARY FRAMING PLAN T.O.S EL. (+) 65'-0"

SCALE 3/16" = 1'-0"

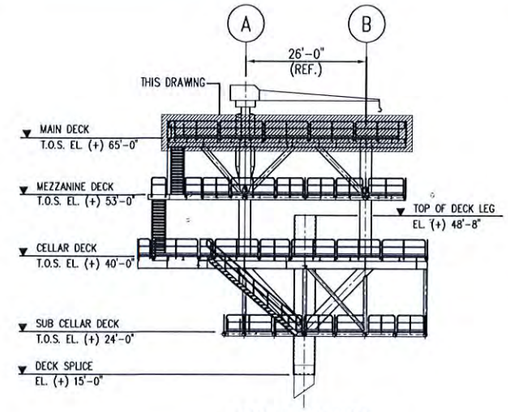

KEY-ELEVATION

SCALE 1/16" = 1'-0"

MATERIAL TAKE OFF

MARK	DESCRIPTION	MATERIAL SPEC.	L/A/V (*)	QTY	TOTAL L/A/V (*)	UNIT (U)	UNIT WEIGHT (lb/U)	TOTAL WEIGHT (lb)	SPEC.	TYPE
	SUPPLIED BY COMPANY									
1	UB610x229x11.1x17.3	ASTM A572 Gr.50	16.83	1	16.83	FT	75.94	1278	I	I
2	UB610x229x11.1x17.3	ASTM A572 Gr.50	26.00	4	104.00	FT	75.94	7898	I	I
3	UB610x229x11.1x17.3	ASTM A572 Gr.50	7.50	2	15.00	FT	75.94	1139	I	I
4	UB610x229x11.1x17.3	ASTM A572 Gr.50	13.08	1	13.08	FT	75.94	993	I	I
5	UB610x229x11.1x17.3	ASTM A572 Gr.50	16.83	2	33.67	FT	75.94	2557	I	I
6	UB610x229x11.1x17.3	ASTM A572 Gr.50	17.08	2	34.17	FT	75.94	2595	I	I
7	W400x200x8x13	ASTM A572 Gr.50	16.5	2	33.00	FT	44.35	1464	I	I
8	W400x200x8x13	ASTM A572 Gr.50	26.00	3	78.00	FT	44.35	3459	I	I
9	W400x200x8x13	ASTM A572 Gr.50	8.70	2	17.41	FT	44.35	772	I	I
10	W400x200x8x13	ASTM A572 Gr.50	8.50	1	8.50	FT	44.35	377	I	I
11	W400x200x8x13	ASTM A572 Gr.50	8.25	4	33.00	FT	44.35	1464	I	I
12	W400x200x8x13	ASTM A572 Gr.50	9.00	1	9.00	FT	44.35	400	I	I
13	W400x200x8x13	ASTM A572 Gr.50	11.14	1	11.14	FT	44.35	494	I	I
14	W400x200x8x13	ASTM A572 Gr.50	7.83	1	7.83	FT	44.35	347	I	I
14A	W400x200x8x13	ASTM A572 Gr.50	8.83	2	17.66	FT	44.35	783	I	I
15	W400x200x8x13	ASTM A572 Gr.50	9.00	3	27.00	FT	44.35	1198	I	I
16	W300x300x10x15	ASTM A572 Gr.50	9.00	2	18.00	FT	63.66	1146	I	I
17	W300x300x10x15	ASTM A572 Gr.50	26.00	2	52.00	FT	63.66	3310	I	I
18	W300x300x10x15	ASTM A572 Gr.50	5.50	2	11.00	FT	63.66	700	I	I
19	W300x300x10x15	ASTM A572 Gr.50	10.58	4	42.32	FT	63.66	2694	I	I
20	W300x300x10x15	ASTM A572 Gr.50	6.42	3	19.25	FT	63.66	1226	I	I
21	W300x300x10x15	ASTM A572 Gr.50	8.70	1	8.70	FT	63.66	554	I	I
							SUB TOTAL WEIGHT =	36848 Lb		

SPECIFICATION (SPEC.): 1 = PHEWMO-C-SPE-0101 (REV.0); 2 = -

(*) L = LENGTH (ft) ; A = AREA (sq.ft) ; V = VOLUME (lbs/ft)

TYPE CLASSIFICATION (TYPE): I = TYPE I, II = TYPE II, III = TYPE III, IV = TYPE IV

APPROVED FOR CONSTRUCTION

PERTAMINA HULU ENERGI JAWA PROJECT
17 NOV 201

NOTE

1. FOR GENERAL NOTES REFER. TO DWG. NO. PHEWMO-PHE12-C-SDE-2000
2. ALL DIMENSIONS ARE IN FEET AND INCH UNLESS NOTED OTHERWISE.
3. ALL MEMBERS ARE TYPE-I UNLESS NOTED OTHERWISE.

CONTRACT NO. 189A/TS/OPS/13

REVISIONS

REV	BY	DATE	DESCRIPTION	PRE'D	CHK'D	APP'D
0	SGH	16-NOV-2015	APPROVED FOR CONSTRUCTION	BS	HSI/AW	JH/AHR
B	BK	05-NOV-2015	ISSUED FOR APPROVAL	BS	HSI/AW	JH/AHR
A	BK	27-OCT-2015	ISSUED FOR REVIEW	BS	HSI/AW	JH/AHR

REF. NO.

ENGINEERING APPROVAL

	BY	DATE
PROCESS		
ELECTRICAL		
INSTRUMENT		
STRUCTURAL		17/11/15
MECHANICAL		
PIPING		
PIPELINE		
PROCESS SAFETY		

PHE WMO APP'D — DATE:

CONTRACTOR APP'D — DATE: 16/11/2015

PROJECT TITLE : EPCI-1 : PHE-12, PHE-24, AND CPP2 PLATFORM AND PIPELINE

PERTAMINA PHE WMO

CONSORTIUM

PT. TIMAS SUPLINDO — PT. GUNANUSA UTAMA FABRICATORS

PHE-12 WELLHEAD PLATFORM
MAIN DECK PRIMARY FRAMING PLAN
AT T.O.S EL. (+) 65'-0"

SCALE	DOCUMENT No	SHEET		REV.
3/16"=1'-0	PHEWMO-PHE12-C-SDE-2001	1	OF 1	0

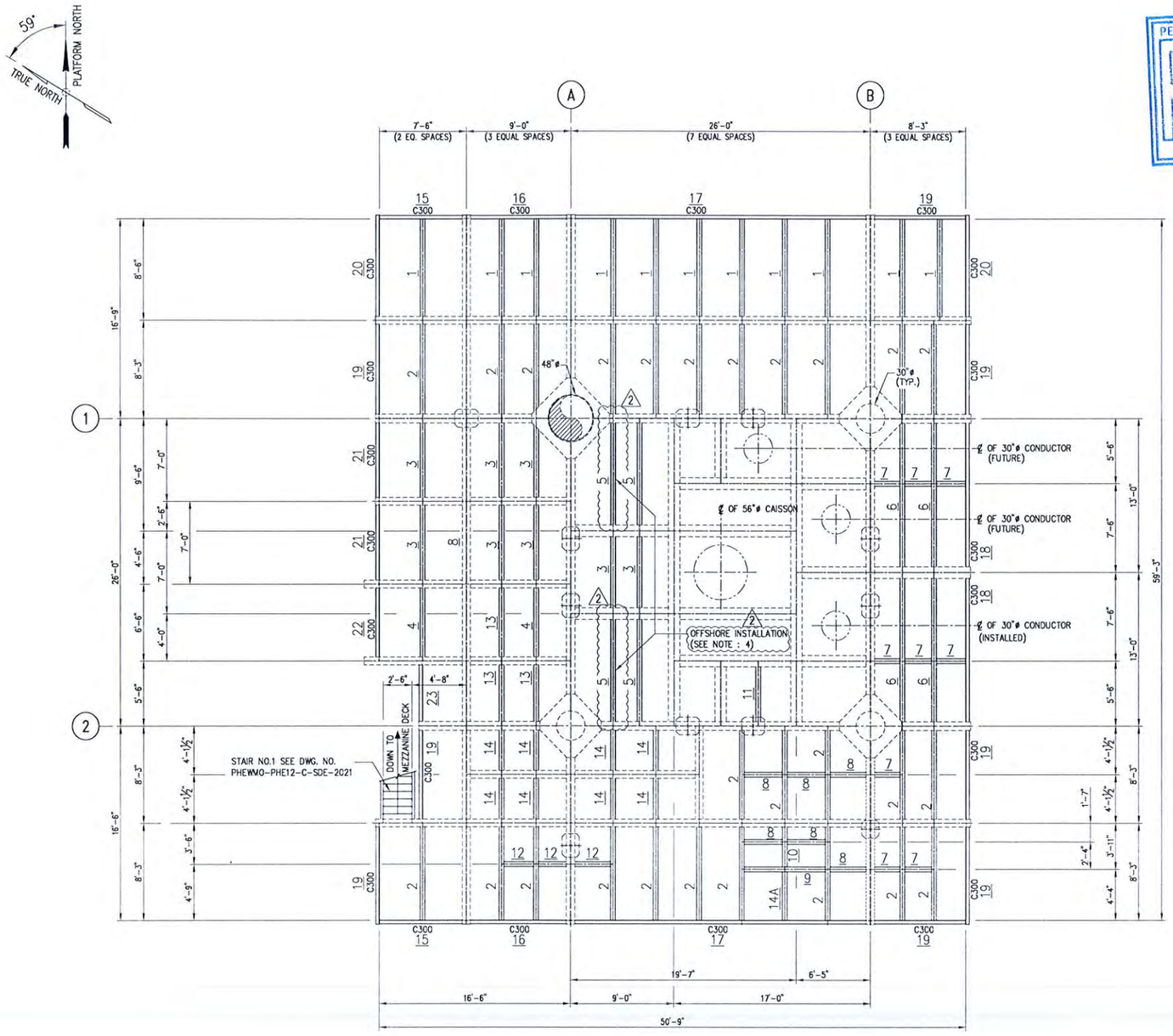

MAIN DECK SECONDARY FRAMING PLAN T.O.S. EL. (+) 65'-0"

SCALE 3/16" = 1'-0"

(ALL MATERIAL MEMBERS SHALL BE H250x125x6x9 U.N.O.)

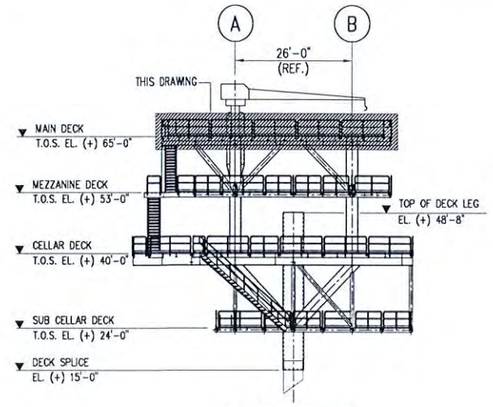

KEY-ELEVATION

SCALE 1/16" = 1'-0"

MATERIAL TAKE OFF

MARK	DESCRIPTION	MATERIAL SPEC.	L/A/V (*)	QTY	TOTAL L/A/V (*)	UNIT (U)	UNIT WEIGHT (lb/U)	TOTAL WEIGHT (lb)	SPEC.	TYPE
	SUPPLIED BY COMPANY									
1	H250x125x6x9	ASTM A36	8.50	11	93.50	FT	19.89	1860	1	III
2	H250x125x6x9	ASTM A36	8.25	26	215.00	FT	19.89	4266	1	III
3	H250x125x6x9	ASTM A36	7.00	8	56.00	FT	19.89	1114	1	III
4	H250x125x6x9	ASTM A36	6.50	2	13.00	FT	19.89	259	1	III
5	H250x125x6x9	ASTM A36	9.50	4	38.00	FT	19.89	756	1	III
6	H250x125x6x9	ASTM A36	13.00	4	52.00	FT	19.89	1034	1	III
7	H250x125x6x9	ASTM A36	2.75	9	24.75	FT	19.89	492	1	III
8	H250x125x6x9	ASTM A36	3.71	6	22.28	FT	19.89	443	1	III
9	H250x125x6x9	ASTM A36	7.43	1	7.43	FT	19.89	148	1	III
10	H250x125x6x9	ASTM A36	3.92	1	3.92	FT	19.89	78	1	III
11	H250x125x6x9	ASTM A36	5.50	1	5.50	FT	19.89	109	1	III
12	H250x125x6x9	ASTM A36	3.00	3	9.00	FT	19.89	179	1	III
13	H250x125x6x9	ASTM A36	5.50	2	11.00	FT	19.89	219	1	III
14	H250x125x6x9	ASTM A36	4.125	8	33.00	FT	19.89	656	1	III
14A	H250x125x6x9	ASTM A36	4.33	1	4.33	FT	19.89	86	1	III
	SUPPLIED BY CONTRACTOR									
15	C300x90x10x15.5	ASTM A36	7.49	2	14.98	FT	29.43	441	1	III
16	C300x90x10x15.5	ASTM A36	8.97	2	17.94	FT	29.43	528	1	III
17	C300x90x10x15.5	ASTM A36	26.00	2	52.00	FT	29.43	1530	1	III
18	C300x90x10x15.5	ASTM A36	13.00	2	26.00	FT	29.43	765	1	III
19	C300x90x10x15.5	ASTM A36	8.25	8	66.00	FT	29.43	1942	1	III
20	C300x90x10x15.5	ASTM A36	8.50	2	17.00	FT	29.43	500	1	III
21	C300x90x10x15.5	ASTM A36	7.00	2	14.00	FT	29.43	412	1	III
22	C300x90x10x15.5	ASTM A36	6.50	1	6.50	FT	29.43	191	1	III
23	C300x90x10x15.5	ASTM A36	5.50	1	5.50	FT	29.43	162	1	III
							SUB TOTAL WEIGHT =	18170 Lb		

SPECIFICATION (SPEC.): 1 = PHEWMO-C-SPE-0101 (REV.0); 2 = -

TYPE CLASSIFICATION (TYPE): I = TYPE I, III = TYPE III, II = TYPE II, IV = TYPE IV

(*) L = LENGTH (ft) ; A = AREA (sq.ft) ; V = VOLUME (lbs/ft)

APPROVED FOR CONSTRUCTION

NOTE

1. FOR GENERAL NOTES REFER. TO DWG. NO. PHEWMO-PHE12-C-SDE-2000
2. ALL DIMENSIONS ARE IN FEET AND INCH UNLESS NOTED OTHERWISE.
3. ALL MEMBERS ARE TYPE-III UNLESS NOTED OTHERWISE.
4. SECONDARY BEAMS MARKED WITH [ ] TO BE OFFSHORE INSTALLED IN ORDER TO ENABLE ACCESS FOR SHACKLE INSTALLATION/ REMOVAL AND DECK LIFTING (INSTALLATION) 2

CONTRACT NO. 189A/TS/OPS/13

REVISIONS

REV	BY	DATE	DESCRIPTION	PRE'D	CHK'D	APP'D
2	SGH	28-JAN-2016	RE-APPROVED FOR CONSTRUCTION	BS	HSI/AW	JH/AHR
1	SGH	16-DES-2015	RE-APPROVED FOR CONSTRUCTION	BS	HSI/AW	JH/HR
C	SGH	16-NOV-2015	APPROVED FOR CONSTRUCTION	BS	HSI/AW	JH/AHR
B	BK	05-NOV-2015	ISSUED FOR APPROVAL	BS	HSI/AW	JH/AHR
A	BK	27-OCT-2015	ISSUED FOR REVIEW	BS	HSI/AW	JH/AHR

REF. NO.

ENGINEERING APPROVAL	BY	DATE
PROCESS		
ELECTRICAL		
INSTRUMENT		
STRUCTURAL	AE	9/2/16
MECHANICAL		
PIPING		
PIPELINE		
PROCESS SAFETY		

PHE WMO APP'D — DATE

CONTRACTOR APP'D — DATE: 4/02/2016

PROJECT TITLE : EPCI-1 : PHE-12, PHE-24, AND CPP2 PLATFORM AND PIPELINE

PERTAMINA PHE WMO

CONSORTIUM

PT. TIMAS SUPLINDO — PT. GUNANUSA UTAMA FABRICATORS

PHE-12 WELLHEAD PLATFORM
MAIN DECK SECONDARY FRAMING PLAN
AT T.O.S EL. (+) 65'-0"

SCALE	DOCUMENT No	SHEET	REV.
3/16"=1'-0"	PHEWMO-PHE12-C-SDE-2002	1 OF 1	2

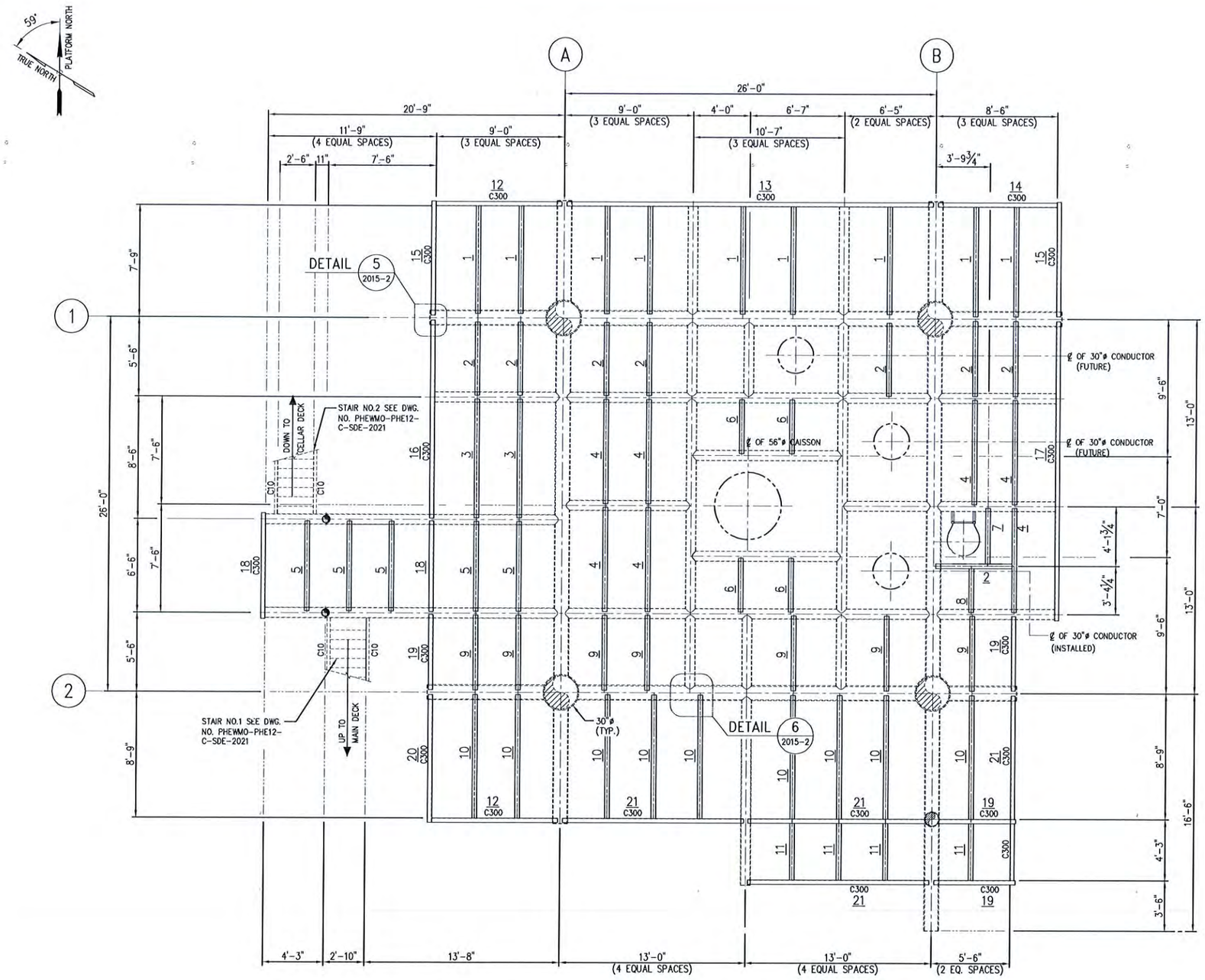

MEZZANINE DECK SECONDARY FRAMING PLAN T.O.S EL. (+) 53'-0"

SCALE ¼" = 1'-0"
(THIS ELEVATION TO BE TOP FLUSH)
(ALL MATERIAL MEMBER SHALL BE H200x100x5.5x8 U.N.O.)

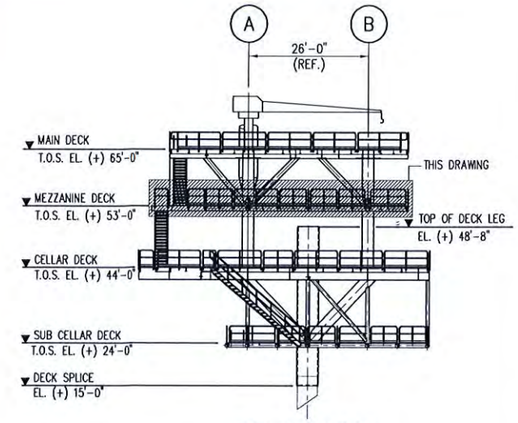

KEY-ELEVATION
SCALE 1/16" = 1'-0"

MATERIAL TAKE OFF

MARK	DESCRIPTION	MATERIAL SPEC.	L/A/V (*)	QTY	TOTAL L/A/V (*)	UNIT (U)	UNIT WEIGHT (lb/U)	TOTAL WEIGHT (lb)	SPEC	TYPE
	SUPPLIED BY COMPANY									
1	H200x100x5.5x8	ASTM A36	7.75	9	69.75	FT	14.33	1000	1	III
2	H200x100x5.5x8	ASTM A36	5.50	8	44.00	FT	14.33	631	1	III
3	H200x100x5.5x8	ASTM A36	8.50	2	17.00	FT	14.33	244	1	III
4	H200x100x5.5x8	ASTM A36	7.50	7	52.50	FT	14.33	752	1	III
5	H200x100x5.5x8	ASTM A36	6.50	5	32.50	FT	14.33	466	1	III
6	H200x100x5.5x8	ASTM A36	4.00	4	16.00	FT	14.33	229	1	III
7	H200x100x5.5x8	ASTM A36	4.15	1	4.15	FT	14.33	59	1	III
8	H200x100x5.5x8	ASTM A36	3.35	1	3.35	FT	14.33	48	1	III
9	H200x100x5.5x8	ASTM A36	5.50	7	38.50	FT	14.33	552	1	III
10	H200x100x5.5x8	ASTM A36	8.75	9	78.75	FT	14.33	1128	1	III
11	H200x100x5.5x8	ASTM A36	4.25	4	17.00	FT	14.33	244	1	III
	SUPPLIED BY CONTRACTOR									
12	C300x90x10x15.5	ASTM A36	9.00	2	18.00	FT	29.43	530	1	III
13	C300x90x10x15.5	ASTM A36	26.00	1	26.00	FT	29.43	765	1	III
14	C300x90x10x15.5	ASTM A36	8.50	1	8.50	FT	29.43	250	1	III
15	C300x90x10x15.5	ASTM A36	7.75	2	15.50	FT	29.43	456	1	III
16	C300x90x10x15.5	ASTM A36	14.00	1	14.00	FT	29.43	412	1	III
17	C300x90x10x15.5	ASTM A36	20.50	1	20.50	FT	29.43	603	1	III
18	C300x90x10x15.5	ASTM A36	6.50	2	13.00	FT	29.43	383	1	III
19	C300x90x10x15.5	ASTM A36	5.50	4	22.00	FT	29.43	648	1	III
20	C300x90x10x15.5	ASTM A36	8.75	1	8.75	FT	29.43	258	1	III
21	C300x90x10x15.5	ASTM A36	13.00	4	52.00	FT	29.43	1530	1	III
							TOTAL WEIGHT =	11188 LB		

SPECIFICATION (SPEC.): 1 = PHEWMO-C-SPE-0101 (REV.0); 2 = -

TYPE CLASSIFICATION (TYPE): I = TYPE I, II = TYPE II, III = TYPE III, IV = TYPE IV

(*) L = LENGTH (ft) ; A = AREA (sq.ft) ; V = VOLUME (lbs/ft)

PERTAMINA HULU ENERGI WMO
RECEIVED
17 NOV 2015
PROJECT

APPROVED FOR CONSTRUCTION

NOTE

1. FOR GENERAL NOTES REFER. TO DWG. NO. PHEWMO-PHE12-C-SDE-2000
2. ALL DIMENSIONS ARE IN FEET AND INCH UNLESS NOTED OTHERWISE.
3. ALL MEMBERS ARE TYPE-III UNLESS NOTED OTHERWISE

CONTRACT NO. 189A/TS/OPS/13

REV	BY	DATE	DESCRIPTION	PRE'D	CHK'D	APP'D
0	SGH	16-NOV-2015	APPROVED FOR CONSTRUCTION	BS	HSI/AW	JH/AHR
B	BK	05-NOV-2015	ISSUED FOR APPROVAL	BS	HSI/AW	JH/AHR
A	SGH	27-OCT-2015	ISSUED FOR REVIEW	BS	HSI/AW	JH/AHR

REF. NO.

ENGINEERING APPROVAL	BY	DATE
PROCESS		
ELECTRICAL		
INSTRUMENT		
STRUCTURAL		17/11/15
MECHANICAL		
PIPING		
PIPELINE		
PROCESS SAFETY		

PHE WMO APP'D — DATE:
CONTRACTOR APP'D — DATE: 16/11/2015

PROJECT TITLE : EPCI-1 : PHE-12, PHE-24, AND CPP2 PLATFORM AND PIPELINE

PERTAMINA PHE WMO

CONSORTIUM
PT. TIMAS SUPLINDO
PT. GUNANUSA UTAMA FABRICATORS

PHE-12 WELLHEAD PLATFORM
MEZZANINE DECK SECONDARY FRAMING PLAN
AT T.O.S. EL (+) 53'-0"

SCALE	DOCUMENT No	SHEET		REV.
¼"=1'-0"	PHEWMO-PHE12-C-SDE-2004	1	OF 1	0

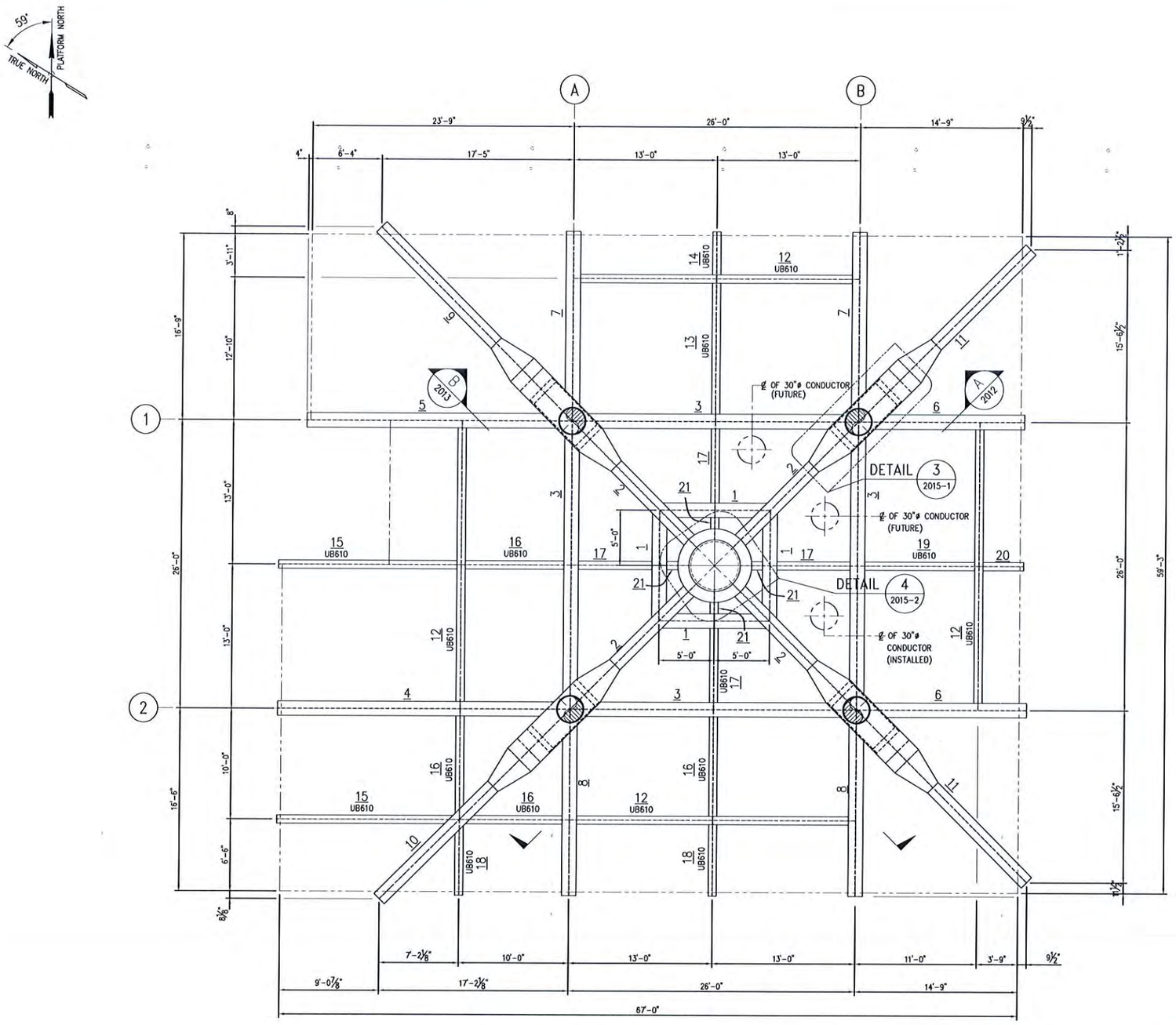

CELLAR DECK PRIMARY FRAMING PLAN T.O.S EL. (+) 40'-0"

SCALE 13/16" =1'-0"

(ALL MATERIAL MEMBER SHALL BE W800x400x14x28 U.N.O.)

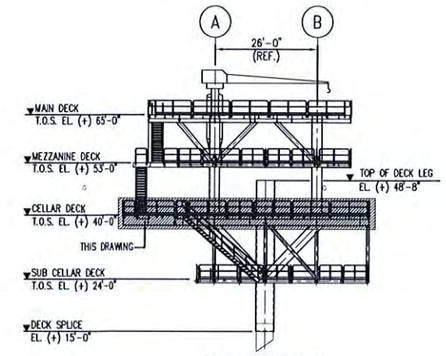

KEY-ELEVATION

SCALE 1/16" = 1'-0"

MATERIAL TAKE OFF

MARK	DESCRIPTION	MATERIAL SPEC.	L/A/V (*)	QTY	TOTAL L/A/V (*)	UNIT (U)	UNIT WEIGHT (lb/U)	TOTAL WEIGHT (lb)	SPEC.	TYPE
	SUPPLIED BY COMPANY									
1	W800x400x14x28	ASTM A572 Gr.50	10.00	4	40.00	FT	173.11	6924	1	I
2	W800x400x14x28	ASTM A572 Gr.50	12.30	4	49.20	FT	173.11	8517	1	I
3	W800x400x14x28	ASTM A572 Gr.50	26.00	4	104.00	FT	173.11	18003	1	I
4	W800x400x14x28	ASTM A572 Gr.50	26.58	1	26.58	FT	173.11	4601	1	I
5	W800x400x14x28	ASTM A572 Gr.50	24.08	1	24.08	FT	173.11	4168	1	I
6	W800x400x14x28	ASTM A572 Gr.50	15.54	2	31.08	FT	173.11	5380	1	I
7	W800x400x14x28	ASTM A572 Gr.50	17.08	2	34.16	FT	173.11	5913	1	I
8	W800x400x14x28	ASTM A572 Gr.50	16.83	2	33.66	FT	173.11	5827	1	I
9	W800x400x14x28	ASTM A572 Gr.50	17.13	1	17.13	FT	173.11	2965	1	I
10	W800x400x14x28	ASTM A572 Gr.50	16.79	1	16.79	FT	173.11	2907	1	I
11	W800x400x14x28	ASTM A572 Gr.50	14.48	2	28.96	FT	173.11	5013	1	I
12	UB610x229x11.1x17.3	ASTM A572 Gr.50	26.00	4	104.00	FT	75.94	7898	1	I
13	UB610x229x11.1x17.3	ASTM A572 Gr.50	12.83	1	12.83	FT	75.94	974	1	I
14	UB610x229x11.1x17.3	ASTM A572 Gr.50	3.92	1	3.92	FT	75.94	298	1	I
15	UB610x229x11.1x17.3	ASTM A572 Gr.50	16.25	2	32.50	FT	75.94	2468	1	I
16	UB610x229x11.1x17.3	ASTM A572 Gr.50	10.00	4	40.00	FT	75.94	3038	1	I
17	UB610x229x11.1x17.3	ASTM A572 Gr.50	8.00	4	32.00	FT	75.94	2430	1	I
18	UB610x229x11.1x17.3	ASTM A572 Gr.50	6.50	2	13.00	FT	75.94	987	1	I
19	UB610x229x11.1x17.3	ASTM A572 Gr.50	11.00	1	11.00	FT	75.94	835	1	I
20	UB610x229x11.1x17.3	ASTM A572 Gr.50	3.75	1	3.75	FT	75.94	285	1	I
21	UB610x229x11.1x17.3	ASTM A572 Gr.50	1.68	4	6.73	FT	75.94	511	1	I
							TOTAL WEIGHT =	89942 LB		

SPECIFICATION : 1 = PHEWMO-C-SPE-0101 (REV.0)
(SPEC.) 2 = -

TYPE CLASSIFICATION : I = TYPE I III = TYPE III
(TYPE) II = TYPE II IV = TYPE IV

(*) L = LENGTH (ft) ; A = AREA (sq.ft) ; V = VOLUME (lbs/ft)

17 NOV 2015

APPROVED FOR CONSTRUCTION

NOTE

1. FOR GENERAL NOTES REFER. TO DWG. NO. PHEWMO-PHE12-C-SDE-2000
2. ALL DIMENSIONS ARE IN FEET AND INCH UNLESS NOTED OTHERWISE.
3. ALL MEMBERS ARE TYPE-I UNLESS NOTED OTHERWISE

CONTRACT NO. 189A/TS/OPS/13

REVISIONS

REV	BY	DATE	DESCRIPTION	PRE'D	CHK'D	APP'D
0	SGH	16-NOV-2015	APPROVED FOR CONSTRUCTION	BS	HSI/AW	JH/AHR
B	SGH	05-NOV-2015	ISSUED FOR APPROVAL	BS	HSI/AW	JH/AHR
A	SGH	27-OCT-2015	ISSUED FOR REVIEW	BS	HSI/AW	JH/AHR

REF. NO.

ENGINEERING APPROVAL	BY	DATE
PROCESS		
ELECTRICAL		
INSTRUMENT		
STRUCTURAL		
MECHANICAL		
PIPING		
PIPELINE		
PROCESS SAFETY		

PHE WMO APP'D — DATE:

CONTRACTOR APP'D — DATE: 16/11/2015

PROJECT TITLE : EPCI-1 : PHE-12, PHE-24, AND CPP2 PLATFORM AND PIPELINE

PERTAMINA PHE WMO

CONSORTIUM

PT. TIMAS SUPLINDO PT. GUNANUSA UTAMA FABRICATORS

PHE-12 WELLHEAD PLATFORM
CELLAR DECK PRIMARY FRAMING PLAN
AT T.O.S. EL (+) 40'-0"

SCALE	DOCUMENT No	SHEET			REV.
3/16"=1'-0"	PHEWMO-PHE12-C-SDE-2005	1	OF	1	0

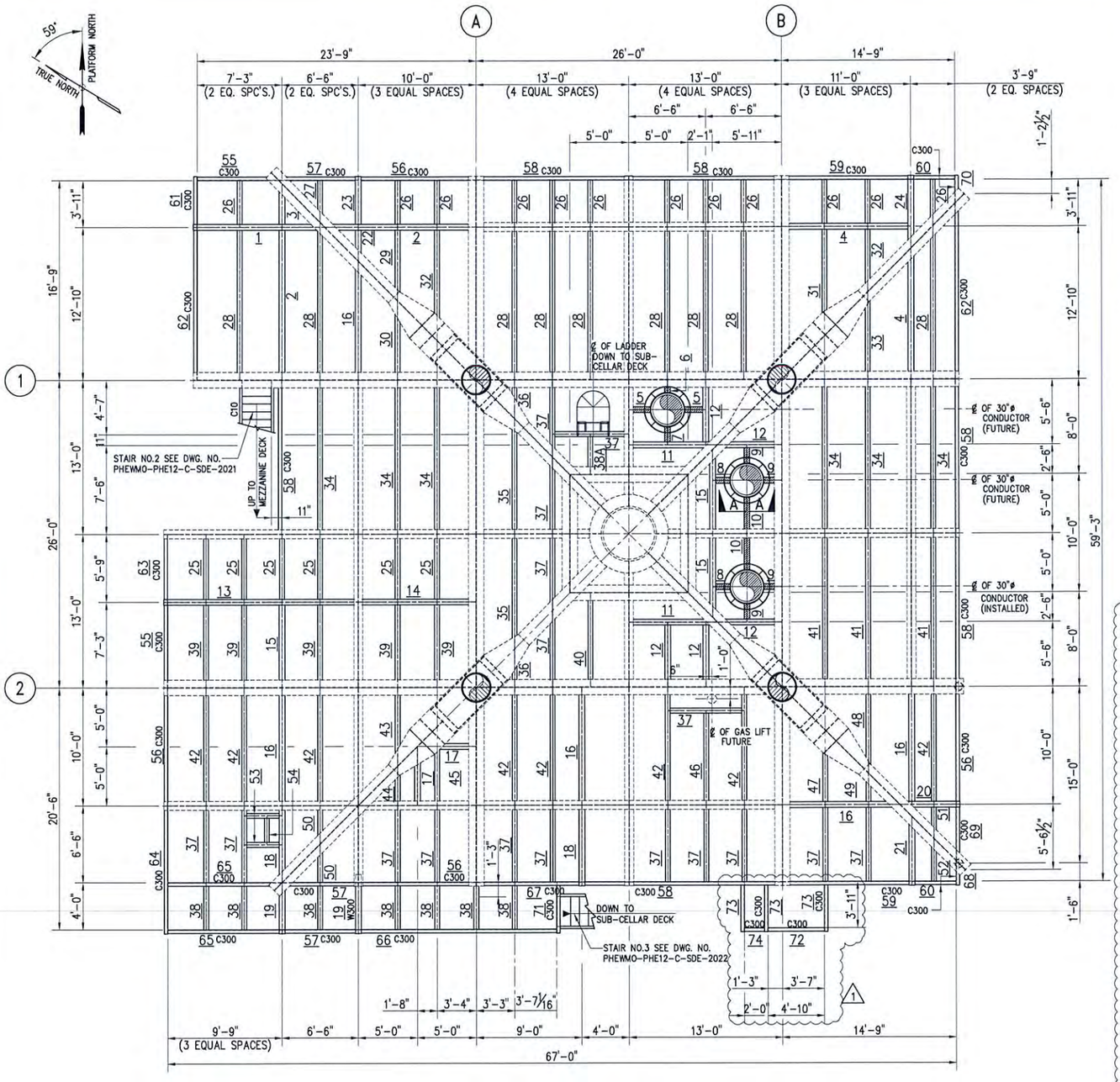

CELLAR DECK SECONDARY FRAMING PLAN T.O.S EL. (+) 40'-0"

SCALE 3/16" = 1'-0"

(ALL MATERIAL MEMBER SHALL BE H250x125x6x9 U.N.O.)

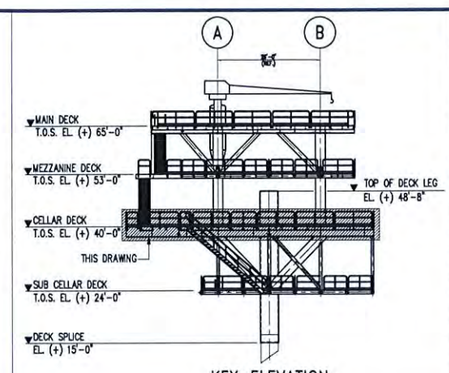

KEY-ELEVATION

SCALE 1/16" = 1'-0"

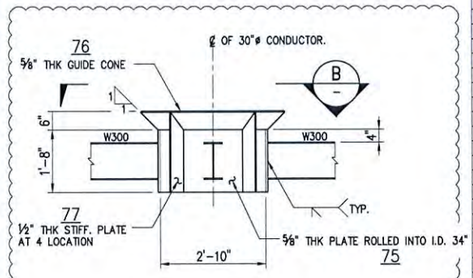

SECTION A

SCALE 1/2"=1'-0"

(3 LOCATIONS)

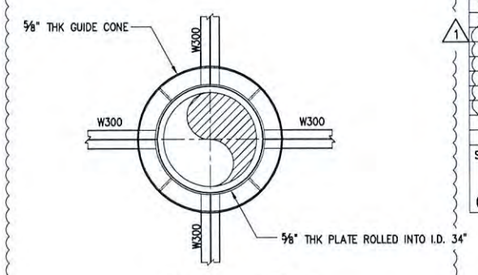

SECTION B

SCALE 1/2"=1'-0"

PERTAMINA HULU ENERGI WMO
26 JAN 2016
PROJECT

MATERIAL TAKE OFF

MARK	DESCRIPTION	MATERIAL SPEC.	L/A/V (*)	QTY	TOTAL L/A/V (*)	UNIT (U)	UNIT WEIGHT (lb/U)	TOTAL WEIGHT (lb)	SPEC	TYPE
	SUPPLIED BY COMPANY									
1	W300x150x6.5x9	ASTM A572 Gr.50	11.25	1	11.25	FT	24.66	277	1	I
2	W300x150x6.5x9	ASTM A572 Gr.50	12.83	2	25.66	FT	24.66	633	1	I
3	W300x150x6.5x9	ASTM A572 Gr.50	3.92	1	3.92	FT	24.66	97	1	I
4	W300x150x6.5x9	ASTM A572 Gr.50	11.00	2	22.00	FT	24.66	543	1	I
5	W300x150x6.5x9	ASTM A572 Gr.50	1.94	2	3.88	FT	24.66	96	1	I
6	W300x150x6.5x9	ASTM A572 Gr.50	1.24	1	1.24	FT	24.66	31	1	I
7	W300x150x6.5x9	ASTM A572 Gr.50	1.68	1	1.68	FT	24.66	41	1	I
8	W300x150x6.5x9	ASTM A572 Gr.50	1.63	2	3.26	FT	24.66	80	1	I
9	W300x150x6.5x9	ASTM A572 Gr.50	1.71	4	6.84	FT	24.66	169	1	I
10	W300x150x6.5x9	ASTM A572 Gr.50	3.21	2	6.42	FT	24.66	158	1	I
11	W300x150x6.5x9	ASTM A572 Gr.50	7.50	1	15.00	FT	24.66	370	1	I
12	W300x150x6.5x9	ASTM A572 Gr.50	5.50	5	27.50	FT	24.66	678	1	I
13	W300x150x6.5x9	ASTM A572 Gr.50	16.25	1	16.25	FT	24.66	401	1	I
14	W300x150x6.5x9	ASTM A572 Gr.50	10.00	1	10.00	FT	24.66	247	1	I
15	W300x150x6.5x9	ASTM A572 Gr.50	7.08	1	7.08	FT	24.66	175	1	I
16	W300x150x6.5x9	ASTM A572 Gr.50	10.00	4	40.00	FT	24.66	986	1	I
17	W300x150x6.5x9	ASTM A572 Gr.50	5.00	2	10.00	FT	24.66	247	1	I
18	W300x150x6.5x9	ASTM A572 Gr.50	6.50	2	13.00	FT	24.66	321	1	I
19	W300x150x6.5x9	ASTM A572 Gr.50	4.00	2	8.00	FT	24.66	197	1	I
20	W300x150x6.5x9	ASTM A572 Gr.50	5.08	1	5.08	FT	24.66	125	1	I
21	W300x150x6.5x9	ASTM A572 Gr.50	5.83	2	11.66	FT	24.66	288	1	I
22	W300x150x6.5x9	ASTM A572 Gr.50	7.08	1	7.08	FT	24.66	175	1	I
23	W300x150x6.5x9	ASTM A572 Gr.50	3.92	1	3.92	FT	24.66	97	1	I
24	W300x150x6.5x9	ASTM A572 Gr.50	1.85	1	1.85	FT	24.66	46	1	I
25	H250x125x6x9	ASTM A36	5.75	6	34.5	FT	19.89	686	1	III
26	H250x125x6x9	ASTM A36	3.92	12	47.04	FT	19.89	936	1	III
27	H250x125x6x9	ASTM A36	3.50	1	3.50	FT	19.89	70	1	III
28	H250x125x6x9	ASTM A36	12.83	9	115.47	FT	19.89	2297	1	III
29	H250x125x6x9	ASTM A36	6.17	1	6.17	FT	19.89	123	1	III
30	H250x125x6x9	ASTM A36	6.67	1	6.67	FT	19.89	133	1	III
31	H250x125x6x9	ASTM A36	9.17	2	18.34	FT	19.89	365	1	III
32	H250x125x6x9	ASTM A36	5.50	1	5.50	FT	19.89	109	1	III
33	H250x125x6x9	ASTM A36	7.33	1	7.33	FT	19.89	146	1	III
34	H250x125x6x9	ASTM A36	13.00	6	78.00	FT	19.89	1551	1	III
35	H250x125x6x9	ASTM A36	9.75	2	19.50	FT	19.89	388	1	III
36	H250x125x6x9	ASTM A36	3.25	2	6.50	FT	19.89	129	1	III
37	H250x125x6x9	ASTM A36	6.50	17	110.50	FT	19.89	2198	1	III
38	H250x125x6x9	ASTM A36	4.00	7	28.00	FT	19.89	557	1	III
38A	H250x125x6x9	ASTM A36	3.42	1	3.42	FT	19.89	68	1	III
39	H250x125x6x9	ASTM A36	7.25	5	36.25	FT	19.89	721	1	III
40	H250x125x6x9	ASTM A36	8.00	1	8.00	FT	19.89	159	1	III
41	H250x125x6x9	ASTM A36	13.00	3	39.00	FT	19.89	776	1	III
42	H250x125x6x9	ASTM A36	10.00	8	80.00	FT	19.89	1591	1	III
43	H250x125x6x9	ASTM A36	6.67	1	6.67	FT	19.89	133	1	III
44	H250x125x6x9	ASTM A36	3.33	1	3.33	FT	19.89	66	1	III
45	H250x125x6x9	ASTM A36	5.00	1	5.00	FT	19.89	99	1	III
46	H250x125x6x9	ASTM A36	8.00	1	8.00	FT	19.89	159	1	III
47	H250x125x6x9	ASTM A36	6.33	1	6.33	FT	19.89	126	1	III
48	H250x125x6x9	ASTM A36	7.33	1	7.33	FT	19.89	146	1	III
49	H250x125x6x9	ASTM A36	2.67	1	2.67	FT	19.89	53	1	III
50	H250x125x6x9	ASTM A36	3.25	2	6.50	FT	19.89	129	1	III
51	H250x125x6x9	ASTM A36	2.88	1	2.88	FT	19.89	57	1	III
52	H250x125x6x9	ASTM A36	3.63	1	3.63	FT	19.89	72	1	III
53	H250x125x6x9	ASTM A36	3.25	2	6.50	FT	19.89	129	1	III
54	H250x125x6x9	ASTM A36	2.46	1	2.46	FT	19.89	49	1	III
	SUPPLIED BY CONTRACTOR									
55	C300x90x10x15.5	ASTM A36	7.25	2	14.50	FT	29.43	427	1	III
56	C300x90x10x15.5	ASTM A36	10.00	4	40.00	FT	29.43	1177	1	III
57	C300x90x10x15.5	ASTM A36	6.50	3	19.50	FT	29.43	574	1	III
58	C300x90x10x15.5	ASTM A36	13.00	6	78.00	FT	29.43	2296	1	III
59	C300x90x10x15.5	ASTM A36	11.00	2	22.00	FT	29.43	648	1	III
60	C300x90x10x15.5	ASTM A36	3.75	2	7.50	FT	29.43	221	1	III
61	C300x90x10x15.5	ASTM A36	3.92	1	3.92	FT	29.43	115	1	III
62	C300x90x10x15.5	ASTM A36	12.83	2	25.66	FT	29.43	755	1	III
63	C300x90x10x15.5	ASTM A36	5.75	1	5.75	FT	29.43	169	1	III
64	C300x90x10x15.5	ASTM A36	10.50	1	10.50	FT	29.43	309	1	III
65	C300x90x10x15.5	ASTM A36	9.75	2	19.50	FT	29.43	574	1	III
66	C300x90x10x15.5	ASTM A36	16.84	1	16.84	FT	29.43	496	1	III
67	C300x90x10x15.5	ASTM A36	9.00	1	9.00	FT	29.43	265	1	III
68	C300x90x10x15.5	ASTM A36	1.50	1	1.50	FT	29.43	44	1	III
69	C300x90x10x15.5	ASTM A36	5.54	1	5.54	FT	29.43	163	1	III
70	C300x90x10x15.5	ASTM A36	1.21	1	1.21	FT	29.43	36	1	III
71	C300x90x10x15.5	ASTM A36	4.30	1	4.30	FT	29.43	127	1	III
72	C300x90x10x15.5	ASTM A36	4.83	1	4.83	FT	29.43	142	1	III
73	C300x90x10x15.5	ASTM A36	3.92	3	11.76	FT	29.43	346	1	III
74	C300x90x10x15.5	ASTM A36	2.00	1	2.00	FT	29.43	59	1	III
75	5/8" THK. PLATE	ASTM A36	15.41	3	46.23	FT2	25.52	1180	1	III
76	5/8" THK. PLATE	ASTM A36	6.12	3	18.36	FT2	25.52	469	1	III
77	1/2" THK. PLATE	ASTM A36	0.89	12	10.68	FT2	20.42	218	1	III
							TOTAL WEIGHT =	31410 LB		

SPECIFICATION (SPEC.): 1 = PHEWMO-C-SPE-0101 (REV.0); 2 = –

TYPE CLASSIFICATION (TYPE): I = TYPE I, II = TYPE II, III = TYPE III, IV = TYPE IV

(*) L = LENGTH (ft) ; A = AREA (sq.ft) ; V = VOLUME (lbs/ft)

APPROVED FOR CONSTRUCTION

NOTE

1. FOR GENERAL NOTES REFER. TO DWG. NO. PHEWMO-PHE12-C-SDE-2000
2. ALL DIMENSIONS ARE IN FEET AND INCH UNLESS NOTED OTHERWISE.
3. ALL MEMBERS ARE TYPE-I UNLESS NOTED OTHERWISE

CONTRACT NO. 189A/TS/OPS/13

REVISIONS

REV	BY	DATE	DESCRIPTION	PRE'D	CHK'D	APP'D
1	SGH	21-JAN-2016	RE-APPROVED FOR CONSTRUCTION	BS	HSI/AW	JH/AHR
0	SGH	16-NOV-2015	APPROVED FOR CONSTRUCTION	BS	HSI/AW	JH/AHR
B	BK	05-NOV-2015	ISSUED FOR APPROVAL	BS	HSI/AW	JH/AHR
A	SGH	27-OCT-2015	ISSUED FOR REVIEW	BS	HSI/AW	JH/AHR

REF. NO.

ENGINEERING APPROVAL	BY	DATE
PROCESS		
ELECTRICAL		
INSTRUMENT		
STRUCTURAL		2/2/16
MECHANICAL		
PIPING		
PIPELINE		
PROCESS SAFETY		

PHE WMO APP'D — DATE:

CONTRACTOR APP'D — DATE: 25/1/2016

PROJECT TITLE : EPCI-1 : PHE-12, PHE-24, AND CPP2 PLATFORM AND PIPELINE

PERTAMINA PHE WMO

CONSORTIUM

PT. TIMAS SUPLINDO — PT. GUNANUSA UTAMA FABRICATORS

PHE-12 WELLHEAD PLATFORM
CELLAR DECK SECONDARY FRAMING PLAN
AT T.O.S. EL (+) 40'-0"

SCALE	DOCUMENT No	SHEET		REV.
3/16"=1'-0"	PHEWMO-PHE12-C-SDE-2006	1	OF 1	1

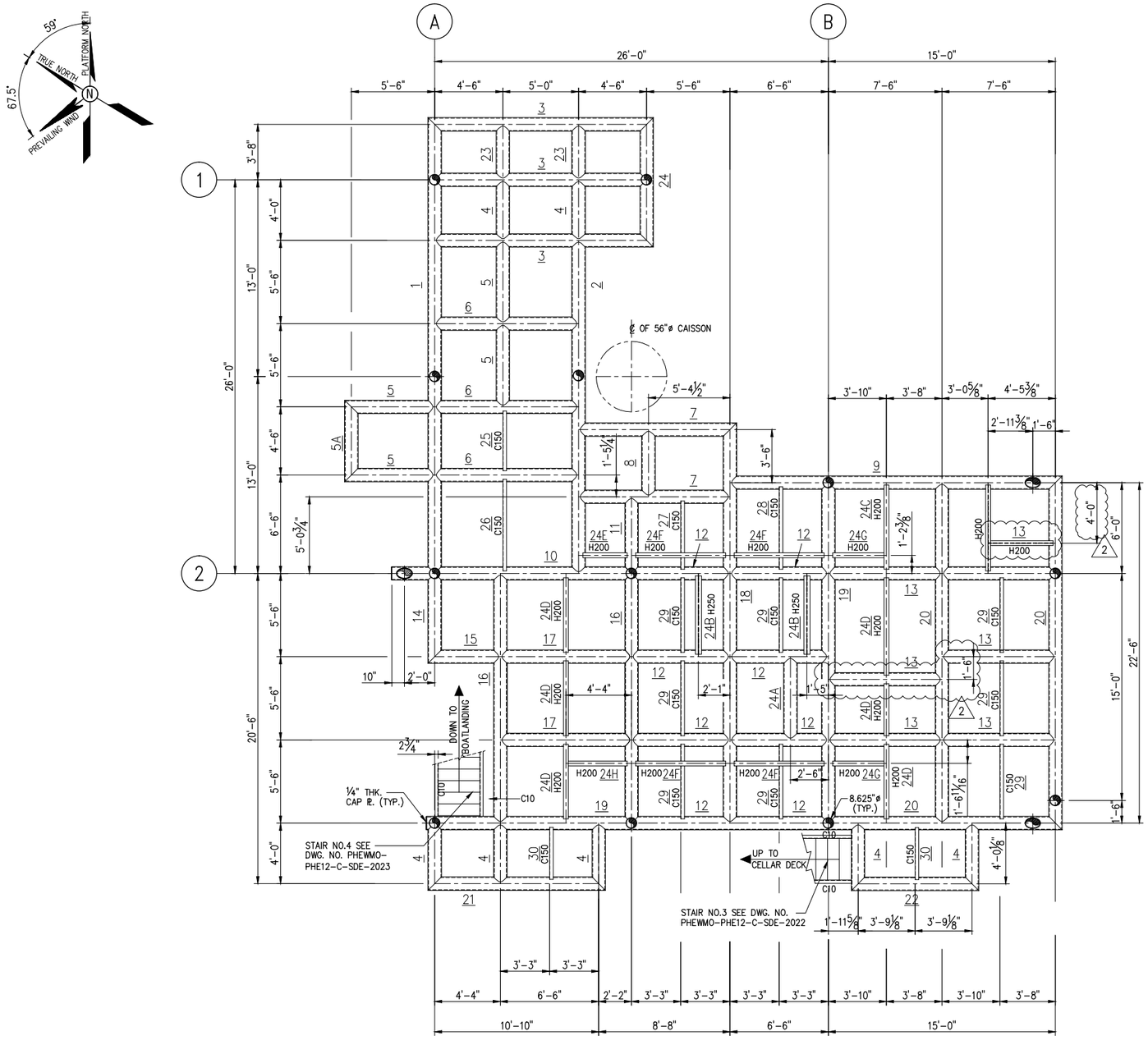

SUB CELLAR DECK FRAMING PLAN T.O.S EL. (+) 24'-0"

SCALE ¼" = 1'-0"
(THIS ELEVATION TO BE TOP FLUSH)
(ALL MATERIAL MEMBERS SHALL BE 10.750"O.D.x0.500"WT. U.N.O.)

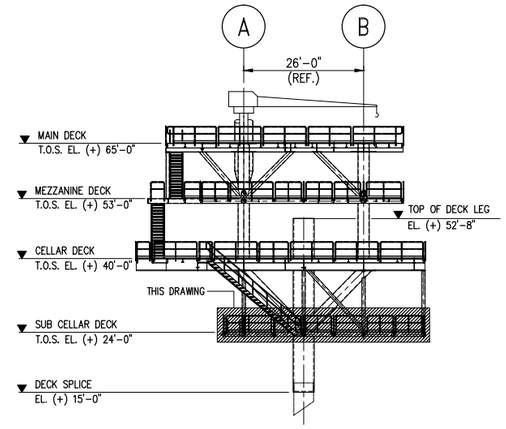

KEY-ELEVATION

SCALE 1/16" = 1'-0"

MATERIAL TAKE OFF

MARK	DESCRIPTION	MATERIAL SPEC.	L/A/V (*)	QTY	TOTAL L/A/V (*)	UNIT (U)	UNIT WEIGHT (lb/U)	TOTAL WEIGHT (lb)	SPEC.	TYPE
	SUPPLIED BY COMPANY									
1	10.75"ø x 0.500" WT. PIPE	API 5L X52 PSL2	30.11	1	30.11	FT	54.79	1650	1	I
2	10.75"ø x 0.500" WT. PIPE	API 5L X52 PSL2	22.00	1	22.00	FT	54.79	1205	1	I
3	10.75"ø x 0.500" WT. PIPE	API 5L X52 PSL2	13.98	3	41.94	FT	54.79	2298	1	I
4	10.75"ø x 0.500" WT. PIPE	API 5L X52 PSL2	4.00	7	28.00	FT	54.79	1534	1	I
5	10.75"ø x 0.500" WT. PIPE	API 5L X52 PSL2	5.50	4	22.00	FT	54.79	1205	1	I
5A	10.75"ø x 0.500" WT. PIPE	API 5L X52 PSL2	4.50	1	4.50	FT	54.79	247	1	I
6	10.75"ø x 0.500" WT. PIPE	API 5L X52 PSL2	9.50	3	28.50	FT	54.79	1562	1	I
7	10.75"ø x 0.500" WT. PIPE	API 5L X52 PSL2	10.00	2	20.00	FT	54.79	1096	1	I
8	10.75"ø x 0.500" WT. PIPE	API 5L X52 PSL2	4.44	1	4.44	FT	54.79	243	1	I
9	10.75"ø x 0.500" WT. PIPE	API 5L X52 PSL2	21.95	1	21.95	FT	54.79	1203	1	I
10	10.75"ø x 0.500" WT. PIPE	API 5L X52 PSL2	15.83	1	15.83	FT	54.79	868	1	I
11	10.75"ø x 0.500" WT. PIPE	API 5L X52 PSL2	5.06	1	5.06	FT	54.79	277	1	I
12	10.75"ø x 0.500" WT. PIPE	API 5L X52 PSL2	6.50	8	52.00	FT	54.79	2849	1	I
13	10.75"ø x 0.500" WT. PIPE	API 5L X52 PSL2	7.50	6	45.00	FT	54.79	2466	1	I
14	10.75"ø x 0.500" WT. PIPE	API 5L X52 PSL2	5.95	1	5.95	FT	54.79	326	1	I
15	10.75"ø x 0.500" WT. PIPE	API 5L X52 PSL2	4.78	1	4.78	FT	54.79	262	1	I
16	10.75"ø x 0.500" WT. PIPE	API 5L X52 PSL2	11.00	2	22.00	FT	54.79	1205	1	I
17	10.75"ø x 0.500" WT. PIPE	API 5L X52 PSL2	8.67	2	17.33	FT	54.79	950	1	I
18	10.75"ø x 0.500" WT. PIPE	API 5L X52 PSL2	26.45	1	26.45	FT	54.79	1449	1	I
19	10.75"ø x 0.500" WT. PIPE	API 5L X52 PSL2	22.50	1	22.50	FT	54.79	1233	1	I
20	10.75"ø x 0.500" WT. PIPE	API 5L X52 PSL2	23.40	2	46.79	FT	54.79	2564	1	I
21	10.75"ø x 0.500" WT. PIPE	API 5L X52 PSL2	11.73	1	11.73	FT	54.79	643	1	I
22	10.75"ø x 0.500" WT. PIPE	API 5L X52 PSL2	8.42	1	8.42	FT	54.79	461	1	I
23	10.75"ø x 0.500" WT. PIPE	API 5L X52 PSL2	3.67	2	7.33	FT	54.79	402	1	I
24	10.75"ø x 0.500" WT. PIPE	API 5L X52 PSL2	8.56	1	8.56	FT	54.79	469	1	I
24A	10.75"ø x 0.500" WT. PIPE	API 5L X52 PSL2	5.50	1	5.50	FT	54.79	301	1	I
24B	H250x125x6x9	ASTM A36	5.50	2	11.00	FT	19.21	211	1	III
24C	H200x100x5.5x8	ASTM A36	6.00	1	6.00	FT	14.33	86	1	III
24D	H200x100x5.5x8	ASTM A36	5.50	6	33	FT	14.33	473	1	III
24E	H200x100x5.5x8	ASTM A36	3.50	1	3.50	FT	14.33	50	1	III
24F	H200x100x5.5x8	ASTM A36	6.50	4	26.00	FT	14.33	373	1	III
24G	H200x100x5.5x8	ASTM A36	3.83	2	7.66	FT	14.33	110	1	III
24H	H200x100x5.5x8	ASTM A36	4.33	1	4.33	FT	14.33	62	1	III
	SUPPLIED BY CONTRACTOR									
25	C 150x75x6	ASTM A36	4.50	1	4.50	FT	12.63	57	1	III
26	C 150x75x6	ASTM A36	6.50	1	6.50	FT	12.63	82	1	III
27	C 150x75x6	ASTM A36	5.06	1	5.06	FT	12.63	64	1	III
28	C 150x75x6	ASTM A36	6.00	1	6.00	FT	12.63	76	1	III
29	C 150x75x6	ASTM A36	5.50	8	44.00	FT	12.63	556	1	III
30	C 150x75x6	ASTM A36	4.00	2	8.00	FT	12.63	101	1	III
31	DELETED									
							TOTAL WEIGHT =	31269 LB		

SPECIFICATION : 1 = PHEWMO-C-SPE-0101 (REV.0)
(SPEC.) 2 = -

TYPE CLASSIFICATION : I = TYPE I III = TYPE III
(TYPE) II = TYPE II IV = TYPE IV

(*) L = LENGTH (ft) ; A = AREA (sq.ft) ; V = VOLUME (lbs/ft)

NOTE

1. FOR GENERAL NOTES REFER. TO DWG. NO. PHEWMO-PHE12-C-SDE-2000
2. ALL DIMENSIONS ARE IN FEET AND INCH UNLESS NOTED OTHERWISE.
3. ALL MEMBERS ARE TYPE-I UNLESS NOTED OTHERWISE.

CONTRACT NO. 189A/TS/OPS/13

REVISIONS

REV	BY	DATE	DESCRIPTION	PRE'D	CHK'D	APP'D
2	JS	29-JAN-2016	RE-APPROVED FOR CONSTRUCTION	BS	HSI/AW	JH/AHR
1	SGH	17-DEC-2015	RE-APPROVED FOR CONSTRUCTION	BS	HSI/AW	JH/AHR
0	SGH	16-NOV-2015	APPROVED FOR CONSTRUCTION	BS	HSI/AW	JH/AHR
B	BK	05-NOV-2015	ISSUED FOR APPROVAL	BS	HSI/AW	JH/AHR
A	BK	27-OCT-2015	ISSUED FOR REVIEW	BS	HSI/AW	JH/AHR

REF. NO.

ENGINEERING APPROVAL	BY	DATE
PROCESS		
ELECTRICAL		
INSTRUMENT		
STRUCTURAL		
MECHANICAL		
PIPING		
PIPELINE		
PROCESS SAFETY		

PHE WMO APP"D

DATE:

CONTRACTOR APP"D

DATE:

PROJECT TITLE : EPCI-1 : PHE-12, PHE-24, AND CPP2 PLATFORM AND PIPELINE

PERTAMINA PHE WMO

CONSORTIUM

PT. TIMAS SUPLINDO PT. GUNANUSA UTAMA FABRICATORS

PHE-12 WELLHEAD PLATFORM
SUB CELLAR DECK FRAMING PLAN
AT T.O.S EL. (+) 24'-0"

SCALE	DOCUMENT No	SHEET			REV.
¼"=1'-0"	PHEWMO-PHE12-C-SDE-2007	1	OF	1	2

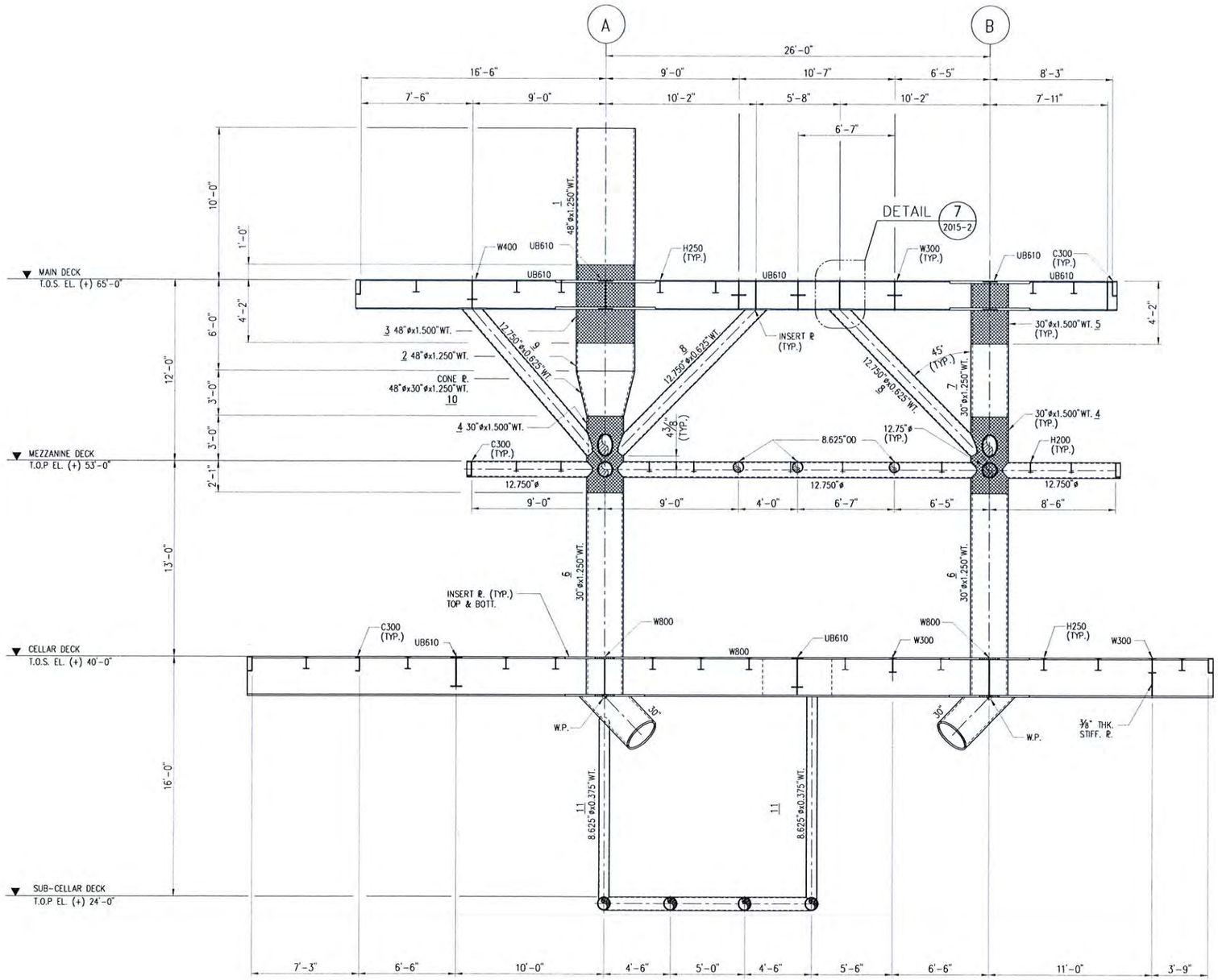

FRAMING ELEVATION ROW-1
SCALE 1/4" = 1'-0"

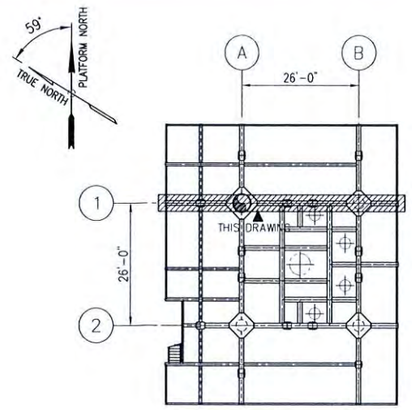

KEY-PLAN
SCALE ~ N.T.S

MATERIAL TAKE OFF

MARK	DESCRIPTION	MATERIAL SPEC.	L/A/V (*)	QTY	TOTAL L/A/V (*)	UNIT (U)	UNIT WEIGHT (lb/U)	TOTAL WEIGHT (lb)	SPEC.	TYPE
	SUPPLIED BY COMPANY									
1	48"ø x1.250" WT. PIPE	API 5L X52 PSL2	9.00	1	9.00	FT	624.71	5622	1	I
2	48"ø x1.250" WT. PIPE	API 5L X52 PSL2	1.83	1	1.83	FT	624.71	1143	1	I
3	48"ø x1.500" WT. PIPE	API 2H Gr.50	5.17	1	5.17	FT	745.64	3855	1	II
4	30"ø x1.500" WT. PIPE	API 2H Gr.50	5.08	2	10.16	FT	457.00	4643	1	II
5	30"ø x1.500" WT. PIPE	API 2H Gr.50	4.17	1	4.17	FT	457.00	1906	1	II
6	30"ø x1.250" WT. PIPE	API 5L X52 PSL2	13.54	2	27.08	FT	384.18	10404	1	I
7	30"ø x1.250" WT. PIPE	API 5L X52 PSL2	4.83	1	4.83	FT	384.18	1856	1	I
8	12.750"ø x0.625" WT. PIPE	API 5L X52 PSL2	14.41	2	28.82	FT	81.01	2335	1	I
9	12.750"ø x0.625" WT. PIPE	API 5L X52 PSL2	13.70	1	13.70	FT	81.01	1110	1	I
10	CONE ℞ 48"ø x30"ø x1.250" WT.	ASTM A572 Gr.50	3.00	1	3.00	FT	504.63	1514	1	I
11	8.625"ø x0.375" WT. PIPE	API 5L X52 PSL2	13.82	2	27.64	FT	33.07	914	1	I
							SUB TOTAL WEIGHT =	35302 LB		

SPECIFICATION (SPEC.): 1 = PHEWMO-C-SPE-0101 (REV.0); 2 = -

TYPE CLASSIFICATION (TYPE): I = TYPE I, II = TYPE II, III = TYPE III, IV = TYPE IV

(*) L = LENGTH (ft) ; A = AREA (sq.ft) ; V = VOLUME (lbs/ft)

APPROVED FOR CONSTRUCTION

17 NOV 2015

This drawing and the design it covers are the property of PERTAMINA PHE WMO it is merely loaned on borrower's expressed agreement that it will not be transmitted, reproduced or disclosed to anyone or otherwise used except privately and then only in a manner stated in the written consent by the lender.

NOTE

1. FOR GENERAL NOTES REFER. TO DWG. NO. PHEWMO-PHE12-C-SDE-2000
2. ALL DIMENSIONS ARE IN FEET AND INCH UNLESS NOTED OTHERWISE.
3. ALL MEMBERS ARE TYPE-I UNLESS NOTED OTHERWISE.
4. MEMBERS MARKED WITH ▩ SHALL BE TYPE-II MATERIAL.

CONTRACT NO. 189A/TS/OPS/13

REVISIONS

REV	BY	DATE	DESCRIPTION	PRE'D	CHK'D	APP'D
0	SGH	16-NOV-2015	APPROVED FOR CONSTRUCTION	BS	HSI/AW	JH/AHR
B	BK	05-NOV-2015	ISSUED FOR APPROVAL	BS	HSI/AW	JH/AHR
A	BK	27-OCT-2015	ISSUED FOR REVIEW	BS	HSI/AW	JH/AHR

REF. NO.

ENGINEERING APPROVAL	BY	DATE
PROCESS		
ELECTRICAL		
INSTRUMENT		
STRUCTURAL		17/11/15
MECHANICAL		
PIPING		
PIPELINE		
PROCESS SAFETY		

PHE WMO APP'D — DATE
CONTRACTOR APP'D — DATE

PROJECT TITLE : EPCI-1 : PHE-12, PHE-24, AND CPP2 PLATFORM AND PIPELINE

PERTAMINA PHE WMO

CONSORTIUM
PT. TIMAS SUPLINDO — PT. GUNANUSA UTAMA FABRICATORS

PHE-12 WELLHEAD PLATFORM
FRAMING ELEVATION ROW-1

SCALE	DOCUMENT No	SHEET		REV.
1/4"=1'-0"	PHEWMO-PHE12-C-SDE-2008	1	OF 1	0

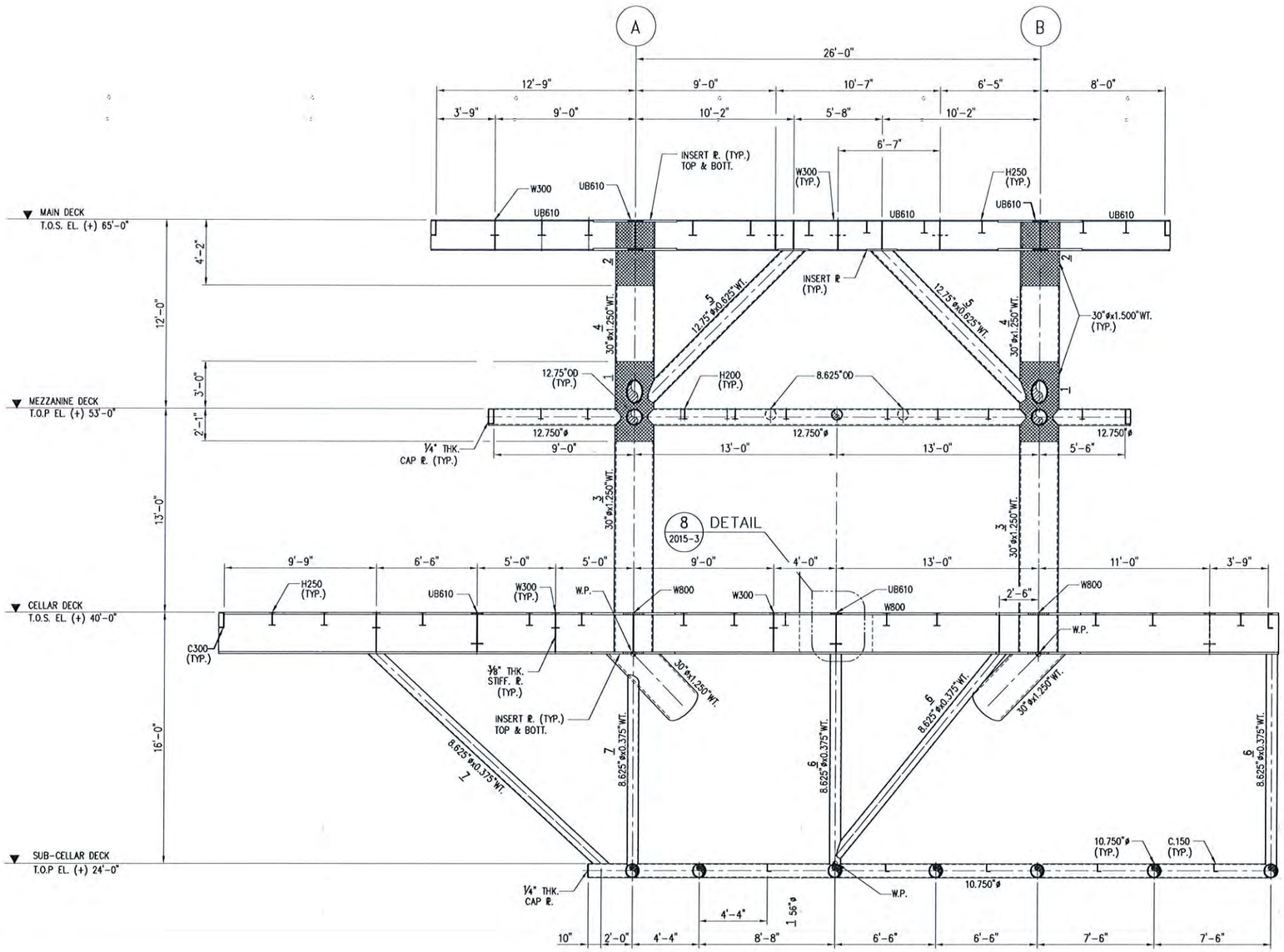

FRAMING ELEVATION ROW-2
SCALE 1/4" = 1'-0"

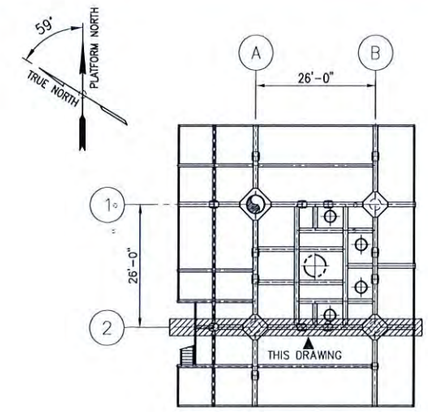

KEY-PLAN
SCALE ~ N.T.S

MATERIAL TAKE OFF

MARK	DESCRIPTION	MATERIAL SPEC.	L/A/V (*)	QTY	TOTAL L/A/V (*)	UNIT (U)	UNIT WEIGHT (lb/U)	TOTAL WEIGHT (lb)	SPEC.	TYPE
	SUPPLIED BY COMPANY									
1	30"øx1.500" WT. PIPE	API 2H Gr.50	5.08	2	10.16	FT	457.00	4643	1	II
2	30"øx1.500" WT. PIPE	API 2H Gr.50	4.17	2	8.34	FT	457.00	3811	1	II
3	30"øx1.250" WT. PIPE	API 5L X52 PSL2	13.54	2	27.08	FT	384.18	10404	1	I
4	30"øx1.250" WT. PIPE	API 5L X52 PSL2	4.83	2	9.66	FT	384.18	3711	1	I
5	12.750"øx0.625" WT. PIPE	API 5L X52 PSL2	14.41	2	28.82	FT	81.01	2335	1	I
6	8.625"øx0.375" WT. PIPE	API 5L X52 PSL2	16.65	3	49.95	FT	33.07	1652	1	I
7	8.625"øx0.375" WT. PIPE	API 5L X52 PSL2	19.73	2	39.46	FT	33.07	1305	1	I
							SUB TOTAL WEIGHT =	27861 LB		

SPECIFICATION : 1 = PHEWMO-C-SPE-0101 (REV.0)
(SPEC.) 2 = -

(*) L = LENGTH (ft) ; A = AREA (sq.ft) ; V = VOLUME (lbs/ft)

TYPE CLASSIFICATION : I = TYPE I III = TYPE III
(TYPE) II = TYPE II IV = TYPE IV

APPROVED FOR CONSTRUCTION

17 NOV 2015

NOTE

1. FOR GENERAL NOTES REFER TO DWG. NO. PHEWMO-PHE12-C-SDE-2000
2. ALL DIMENSIONS ARE IN FEET AND INCH UNLESS NOTED OTHERWISE.
3. ALL MEMBERS ARE TYPE-I UNLESS NOTED OTHERWISE.
4. MEMBERS MARKED WITH ▩ SHALL BE TYPE-II MATERIAL.

CONTRACT NO. 189A/TS/OPS/13

REVISIONS

REV	BY	DATE	DESCRIPTION	PRE'D	CHK'D	APP'D
0	SGH	16-NOV-2015	APPROVED FOR CONSTRUCTION	BS	HSI/AW	JH/AHR
B	SGH	05-NOV-2015	ISSUED FOR APPROVAL	BS	HSI/AW	JH/AHR
A	SGH	27-OCT-2015	ISSUED FOR REVIEW	BS	HSI/AW	JH/AHR

REF. NO.

ENGINEERING APPROVAL	BY	DATE
PROCESS		
ELECTRICAL		
INSTRUMENT		
STRUCTURAL		17/11/15
MECHANICAL		
PIPING		
PIPELINE		
PROCESS SAFETY		

PHE WMO APP'D
DATE:
CONTRACTOR APP'D
DATE: 16/11/2015

PROJECT TITLE : EPCI-1 : PHE-12, PHE-24, AND CPP2 PLATFORM AND PIPELINE

PERTAMINA PHE WMO

CONSORTIUM
PT. TIMAS SUPLINDO PT. GUNANUSA UTAMA FABRICATORS

PHE-12 WELLHEAD PLATFORM
FRAMING ELEVATION ROW-2

SCALE	DOCUMENT No	SHEET		REV.
1/4"=1'-0"	PHEWMO-PHE12-C-SDE-2009	1	OF 1	0

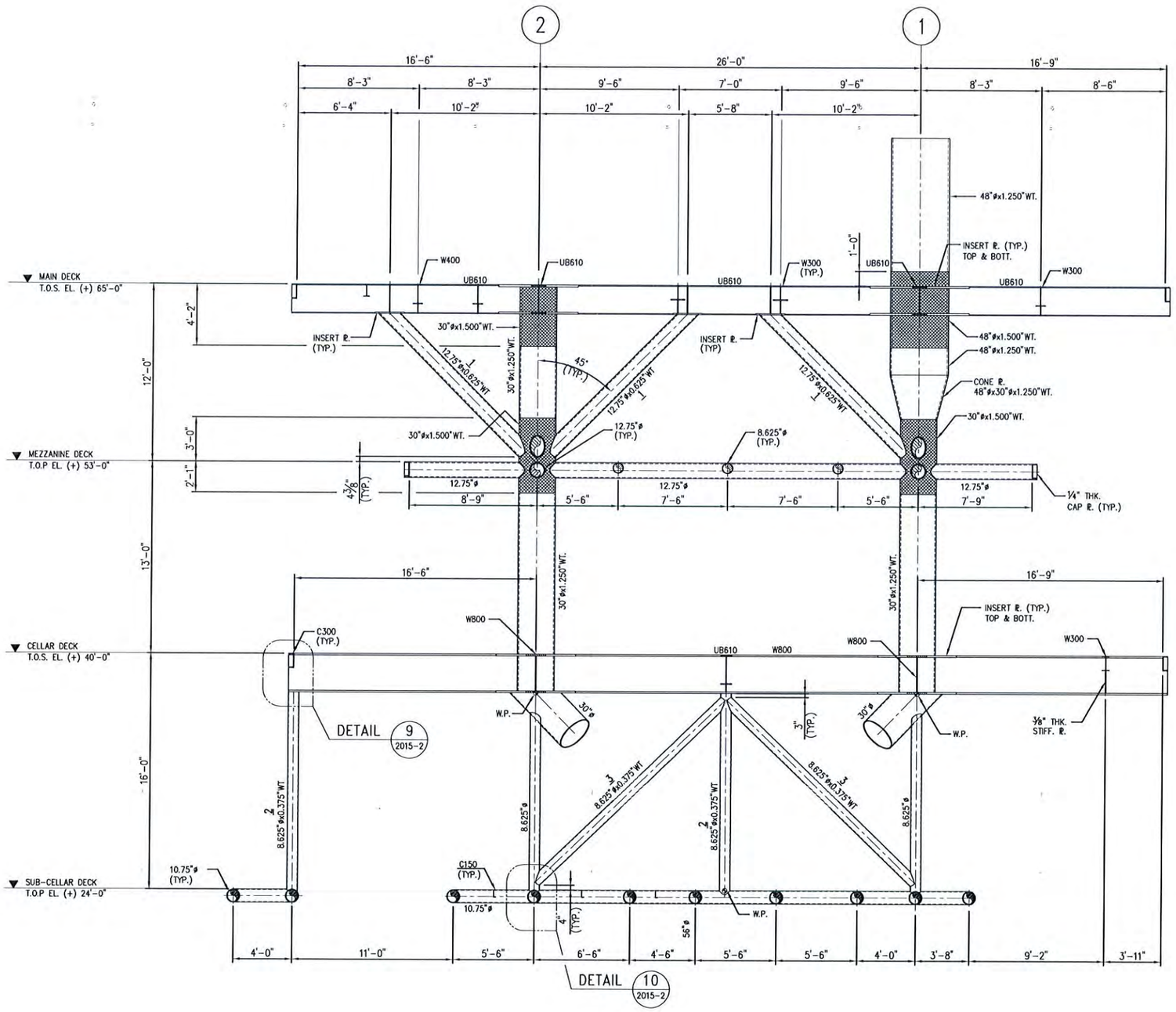

FRAMING ELEVATION ROW-A
SCALE ¼" = 1'-0"

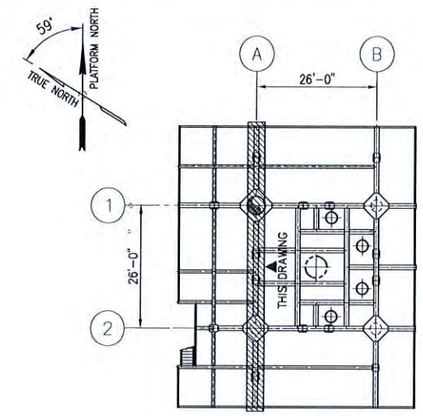

KEY-PLAN
SCALE ~ N.T.S

MATERIAL TAKE OFF

MARK	DESCRIPTION	MATERIAL SPEC.	L/A/V (*)	QTY	TOTAL L/A/V (*)	UNIT (U)	UNIT WEIGHT (lb/U)	TOTAL WEIGHT (lb)	SPEC.	TYPE
SUPPLIED BY COMPANY										
1	12.75"øx0.625" WT. PIPE	API 5L X52 PSL2	14.38	3	43.14	FT	81.01	3495	1	I
2	8.625"øx0.375" WT. PIPE	API 5L X52 PSL2	13.38	2	26.76	FT	33.07	885	1	I
3	8.625"øx0.375" WT. PIPE	API 5L X52 PSL2	18.03	2	36.06	FT	33.07	1193	1	I
							SUB TOTAL WEIGHT =	5573 LB		

SPECIFICATION (SPEC.): 1 = PHEWMO-C-SPE-0101 (REV.0); 2 = -

TYPE CLASSIFICATION (TYPE): I = TYPE I, II = TYPE II, III = TYPE III, IV = TYPE IV

(*) L = LENGTH (ft) ; A = AREA (sq.ft) ; V = VOLUME (lbs/ft)

APPROVED FOR CONSTRUCTION

17 NOV 201

This drawing and the design it covers are the property of PERTAMINA PHE WMO it is merely loaned on borrower's expressed agreement that it will not be transmitted, reproduced or disclosed to anyone or otherwise used except privately and then only in a manner stated in the written consent by the lender.

NOTE

1. FOR GENERAL NOTES REFER. TO DWG. NO. PHEWMO-PHE12-C-SDE-2000
2. ALL DIMENSIONS ARE IN FEET AND INCH UNLESS NOTED OTHERWISE.
3. ALL MEMBERS ARE TYPE-I UNLESS NOTED OTHERWISE.
4. MEMBERS MARKED WITH ▩ SHALL BE TYPE-II MATERIAL.

CONTRACT NO. 189A/TS/OPS/13

REVISIONS

REV	BY	DATE	DESCRIPTION	PRE'D	CHK'D	APP'D
0	SGH	16-NOV-2015	APPROVED FOR CONSTRUCTION	BS	HSI/AW	JH/AHR
B	BK	05-NOV-2015	ISSUED FOR APPROVAL	BS	HSI/AW	JH/AHR
A	SGH	27-OCT-2015	ISSUED FOR REVIEW	BS	HSI/AW	JH/AHR

REF. NO.

ENGINEERING APPROVAL	BY	DATE
PROCESS		
ELECTRICAL		
INSTRUMENT		
STRUCTURAL		17/11/15
MECHANICAL		
PIPING		
PIPELINE		
PROCESS SAFETY		

PHE WMO APP'D — DATE:
CONTRACTOR APP'D — DATE: 16/11/2015

PROJECT TITLE : EPCI-1 : PHE-12, PHE-24, AND CPP2 PLATFORM AND PIPELINE

PERTAMINA PHE WMO

CONSORTIUM
PT. TIMAS SUPLINDO — PT. GUNANUSA UTAMA FABRICATORS

PHE-12 WELLHEAD PLATFORM
FRAMING ELEVATION ROW-A

SCALE	DOCUMENT No	SHEET		REV.
¼"=1'-0"	PHEWMO-PHE12-C-SDE-2010	1	OF 1	0

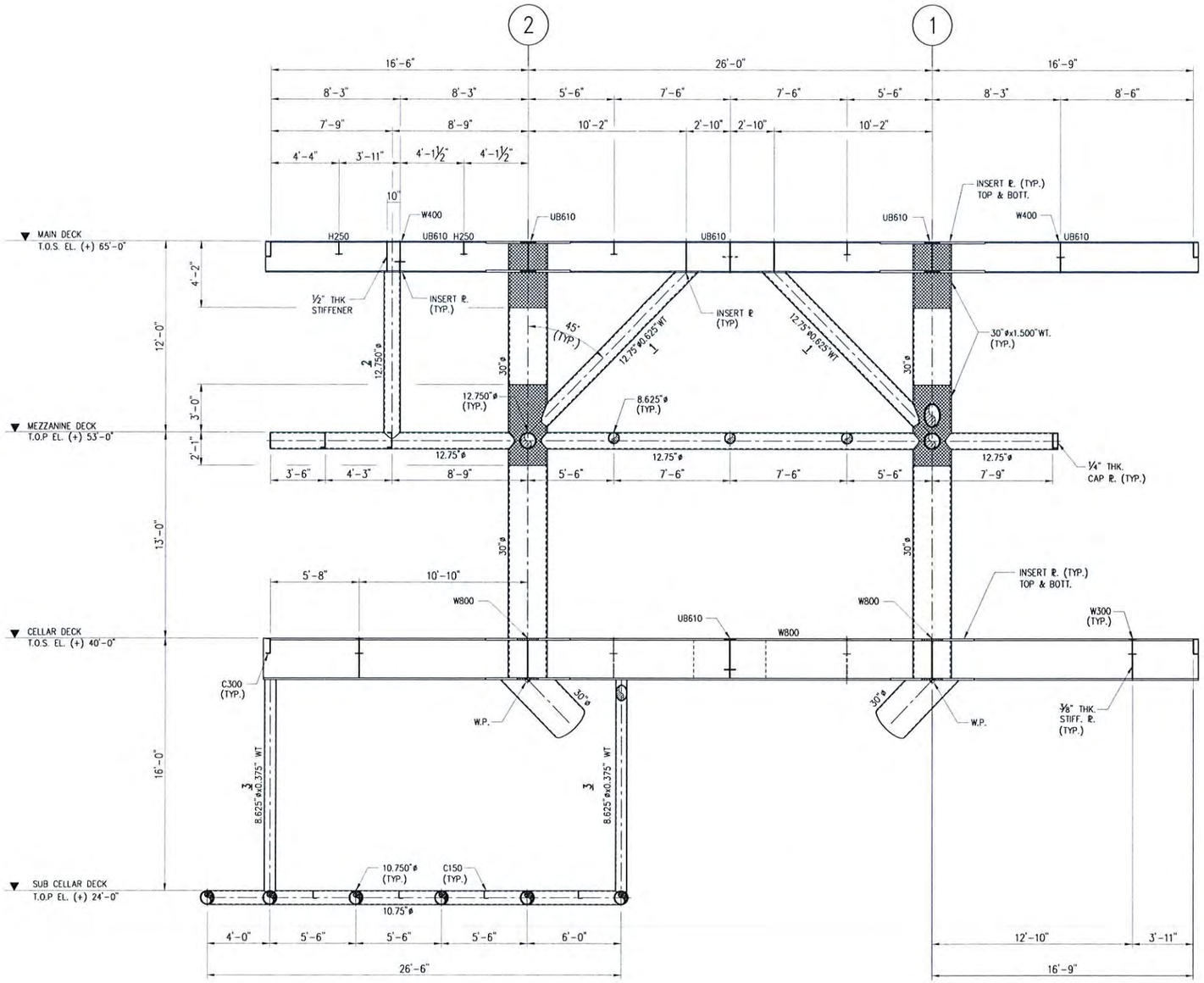

FRAMING ELEVATION ROW-B
SCALE ¼" = 1'-0"

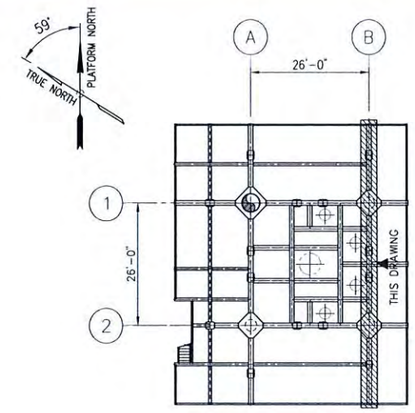

KEY-PLAN
SCALE ~ N.T.S

MATERIAL TAKE OFF

MARK	DESCRIPTION	MATERIAL SPEC.	L/A/V (*)	QTY	TOTAL L/A/V (*)	UNIT (U)	UNIT WEIGHT (lb/U)	TOTAL WEIGHT (lb)	SPEC	TYPE
SUPPLIED BY COMPANY										
1	12.750"øx0.625" WT. PIPE	API 5L X52 PSL2	14.41	2	28.82	FT	81.01	2335	1	I
2	12.750"øx0.625" WT. PIPE	API 5L X52 PSL2	10.68	1	10.68	FT	81.01	865	1	I
3	8.625"øx0.375" WT. PIPE	API 5L X52 PSL2	13.38	2	26.76	FT	33.07	885	1	I
							SUB TOTAL WEIGHT =	4085 LB		

SPECIFICATION (SPEC.): 1 = PHEWMO-C-SPE-0101 (REV.0); 2 = –

TYPE CLASSIFICATION (TYPE): I = TYPE I, II = TYPE II, III = TYPE III, IV = TYPE IV

(*) L = LENGTH (ft) ; A = AREA (sq.ft) ; V = VOLUME (lbs/ft)

APPROVED FOR CONSTRUCTION

17 NOV 2015

NOTE

1. FOR GENERAL NOTES REFER. TO DWG. NO. PHEWMO-PHE12-C-SDE-2000
2. ALL DIMENSIONS ARE IN FEET AND INCH UNLESS NOTED OTHERWISE.
3. ALL MEMBERS ARE TYPE-I UNLESS NOTED OTHERWISE.
4. MEMBERS MARKED WITH ▩ SHALL BE TYPE-II MATERIAL.

CONTRACT NO. 189A/TS/OPS/13

REVISIONS

REV	BY	DATE	DESCRIPTION	PRE'D	CHK'D	APP'D
0	SGH	16-NOV-2015	APPROVED FOR CONSTRUCTION	BS	HSI/AW	JH/AHR
B	SGH	05-NOV-2015	ISSUED FOR APPROVAL	BS	HSI/AW	JH/AHR
A	SGH	27-OCT-2015	ISSUED FOR REVIEW	BS	HSI/AW	JH/AHR

REF. NO.

ENGINEERING APPROVAL	BY	DATE
PROCESS		
ELECTRICAL		
INSTRUMENT		
STRUCTURAL		17/11/15
MECHANICAL		
PIPING		
PIPELINE		
PROCESS SAFETY		

PHE WMO APP'D — DATE:

CONTRACTOR APP'D — DATE:

PROJECT TITLE : EPCI-1 : PHE-12, PHE-24, AND CPP2 PLATFORM AND PIPELINE

PERTAMINA PHE WMO

CONSORTIUM

PT. TIMAS SUPLINDO — PT. GUNANUSA UTAMA FABRICATORS

PHE-12 WELLHEAD PLATFORM
FRAMING ELEVATION ROW-B

SCALE	DOCUMENT No	SHEET			REV.
¼"=1'-0"	PHEWMO-PHE12-C-SDE-2011	1	OF	1	0

PERTAMINA HULU ENERGI WMO
RECEIVED
30 DEC 2015
PROJECT

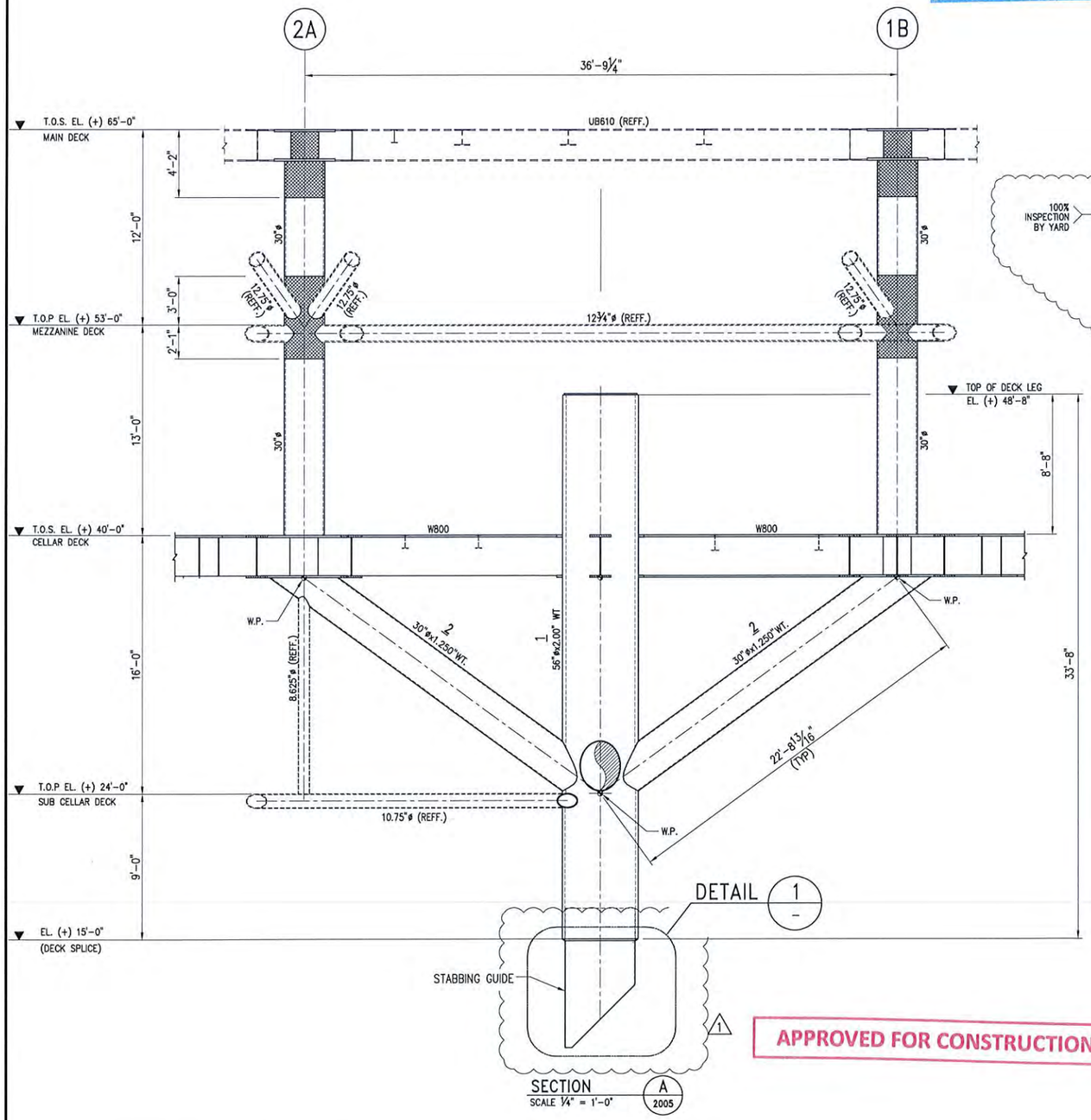

APPROVED FOR CONSTRUCTION

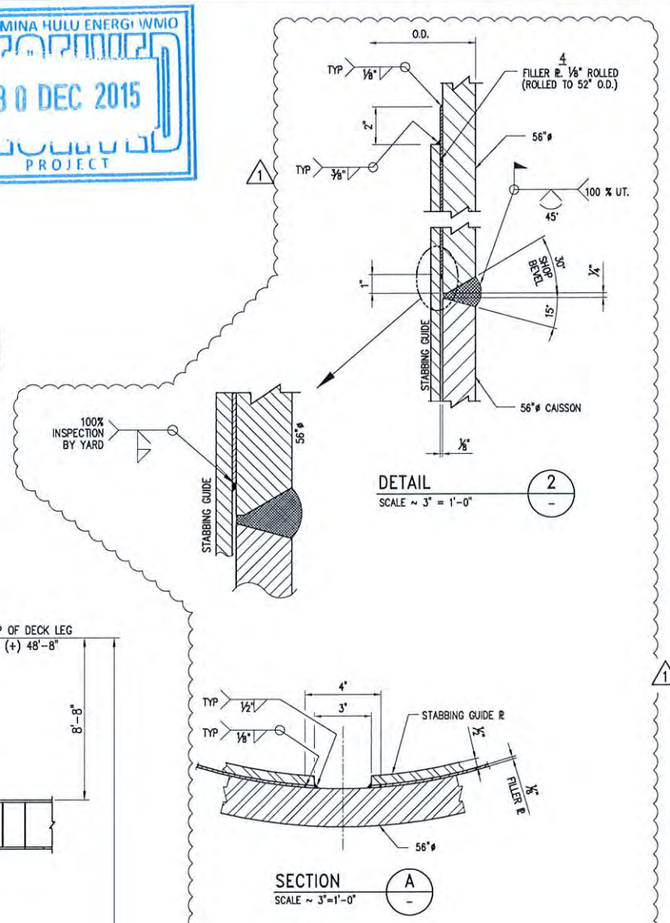

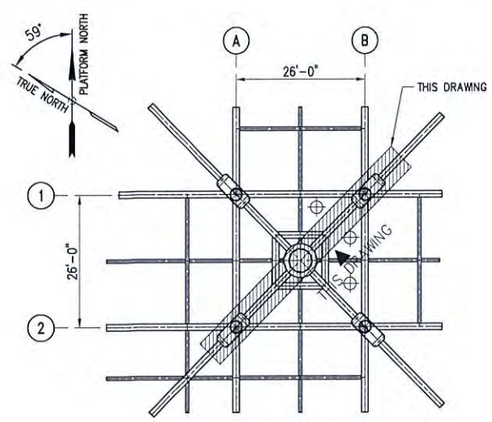

KEY-PLAN
SCALE ~ N.T.S

MATERIAL TAKE OFF

MARK	DESCRIPTION	MATERIAL SPEC.	L/A/V (*)	QTY	TOTAL L/A/V (*)	UNIT (U)	UNIT WEIGHT (lb/U)	TOTAL WEIGHT (lb)	SPEC.	TYPE
	SUPPLIED BY COMPANY									
1	56"ø x2.00" WT. PIPE	API 5L X52 PSL2	33.67	1	33.67	FT	1154.54	38873	1	I
2	30"ø x1.250" WT. PIPE	API 5L X52 PSL2	22.73	2	45.46	FT	384.18	17465	1	I
	SUPPLIED BY CONTRACTOR									
3	½" THK. PLATE	ASTM A572 Gr.50	116.17	1	116.17	FT²	20.42	2372	1	I
4	⅛" THK. PLATE	ASTM A36	28.16	1	28.16	FT²	5.10	144	1	III
5	¼" THK. PLATE	ASTM A36	0.06	1	0.06	FT²	10.21	1	1	III
6	¼" THK. PLATE	ASTM A36	0.11	1	0.11	FT²	10.21	1	1	III
					SUB TOTAL WEIGHT =			58856 LB		

SPECIFICATION (SPEC.): 1 = PHEWMO-C-SPE-0101 (REV.0); 2 = –

TYPE CLASSIFICATION (TYPE): I = TYPE I, II = TYPE II, III = TYPE III, IV = TYPE IV

(*) L = LENGTH (ft) ; A = AREA (sq.ft) ; V = VOLUME (lbs/ft)

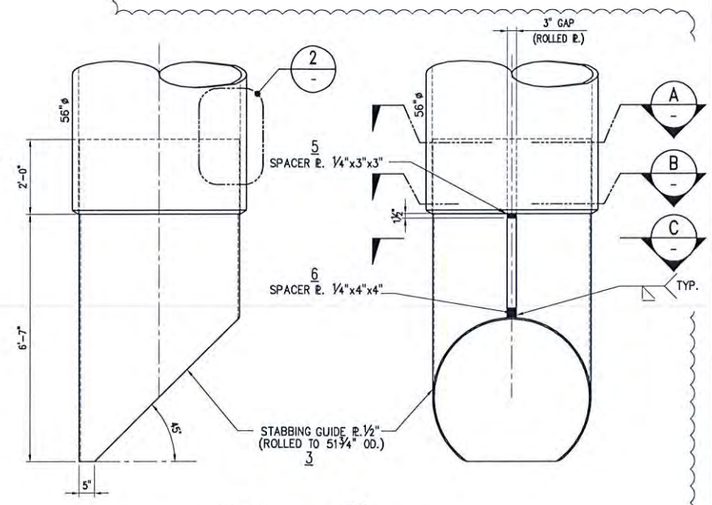

NOTE

1. FOR GENERAL NOTES REFER. TO DWG. NO. PHEWMO-PHE12-C-SDE-2000
2. ALL DIMENSIONS ARE IN FEET AND INCH UNLESS NOTED OTHERWISE.
3. ALL MEMBERS ARE TYPE-I UNLESS NOTED OTHERWISE.
4. MEMBERS MARKED WITH ▩ SHALL BE TYPE-II MATERIAL.

CONTRACT NO. 189A/TS/OPS/13

REVISIONS

REV	BY	DATE	DESCRIPTION	PRE'D	CHK'D	APP'D
1	SGH	29-DEC-2015	RE APPROVED FOR CONSTRUCTION	BS	HSI/AW	JH/AHR
0	SGH	16-NOV-2015	APPROVED FOR CONSTRUCTION	BS	HSI/AW	JH/AHR
B	BK	05-NOV-2015	ISSUED FOR APPROVAL	BS	HSI/AW	JH/AHR
A	BK	27-OCT-2015	ISSUED FOR REVIEW	BS	HSI/AW	JH/AHR

REF. NO.

ENGINEERING APPROVAL	BY	DATE
PROCESS		
ELECTRICAL		
INSTRUMENT		
STRUCTURAL		4/1/16
MECHANICAL		
PIPING		
PIPELINE		
PROCESS SAFETY		

PHE WMO APP'D — DATE:
CONTRACTOR APP'D — DATE: 30/12/2015

PROJECT TITLE : EPCI-1 : PHE-12, PHE-24, AND CPP2 PLATFORM AND PIPELINE

PERTAMINA PHE WMO

CONSORTIUM
PT. TIMAS SUPLINDO — PT. GUNANUSA UTAMA FABRICATORS

PHE-12 WELLHEAD PLATFORM
FRAMING ELEVATION SECTION-A

SCALE	DOCUMENT No	SHEET			REV.
¼"=1'-0"	PHEWMO-PHE12-C-SDE-2012	1	OF	1	1

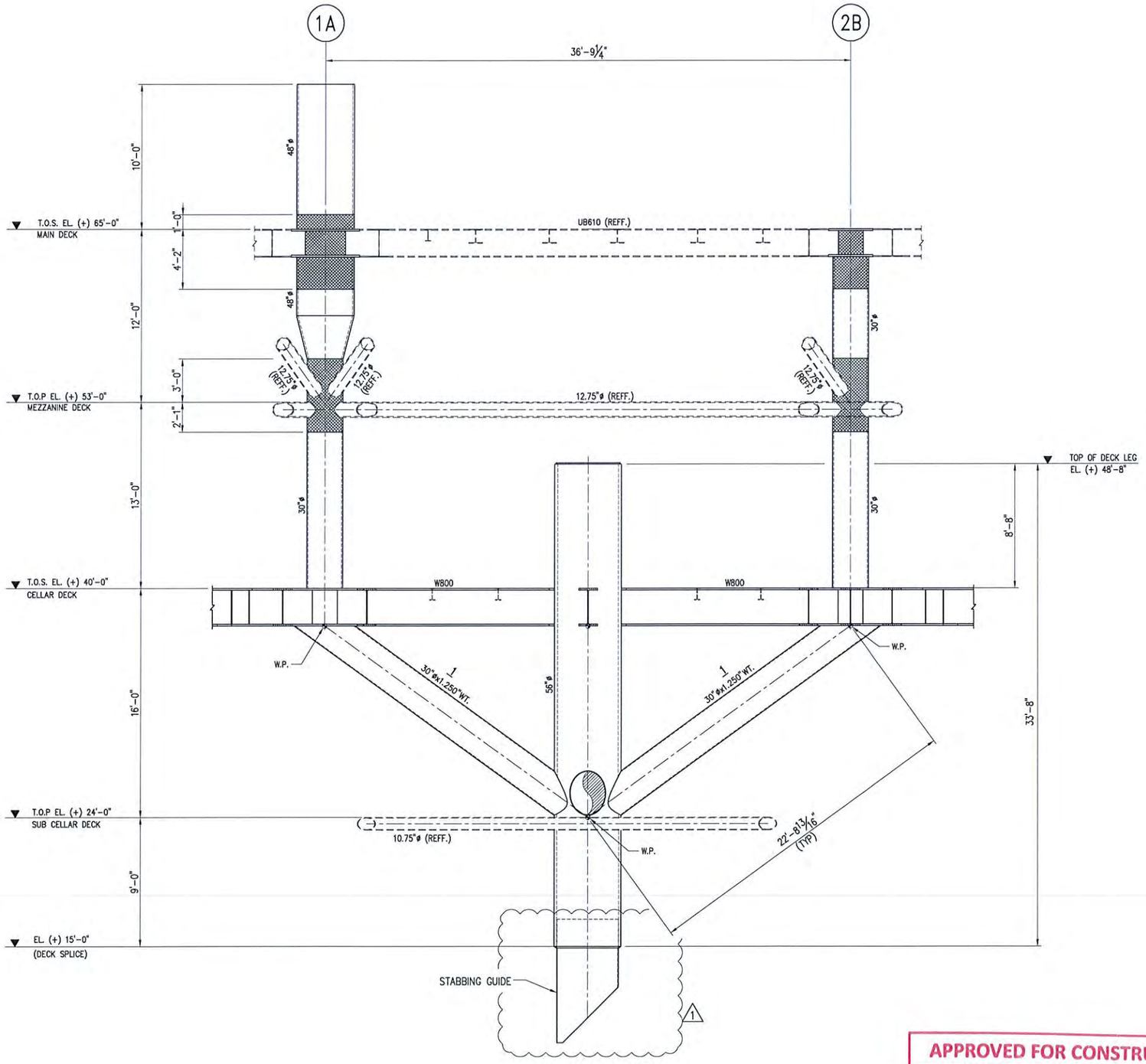

SECTION B
SCALE ¼" = 1'-0"
2005

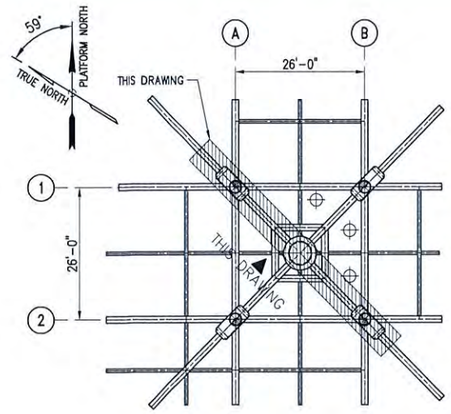

KEY-PLAN
SCALE ~ N.T.S

MATERIAL TAKE OFF

MARK	DESCRIPTION	MATERIAL SPEC.	L/A/V (*)	QTY	TOTAL L/A/V (*)	UNIT (U)	UNIT WEIGHT (lb/U)	TOTAL WEIGHT (lb)	SPEC.	TYPE
SUPPLIED BY COMPANY										
1	30"øx1.250" WT. PIPE	API 5L X52 PSL2	22.73	2	45.46	FT	384.18	17465	1	I
							SUB TOTAL WEIGHT =		17465 LB	

SPECIFICATION (SPEC.): 1 = PHEWMO-C-SPE-0101 (REV.0); 2 = -

(*) L = LENGTH (ft) ; A = AREA (sq.ft) ; V = VOLUME (lbs/ft)

TYPE CLASSIFICATION (TYPE): I = TYPE I, II = TYPE II, III = TYPE III, IV = TYPE IV

PERTAMINA HULU ENERGI WMO
RECEIVED
30 DEC 2015
PROJECT

APPROVED FOR CONSTRUCTION

NOTE

1. FOR GENERAL NOTES REFER. TO DWG. NO. PHEWMO-PHE12-C-SDE-2000
2. ALL DIMENSIONS ARE IN FEET AND INCH UNLESS NOTED OTHERWISE.
3. ALL MEMBERS ARE TYPE-I UNLESS NOTED OTHERWISE.
4. MEMBERS MARKED WITH ▩ SHALL BE TYPE-II MATERIAL.

CONTRACT NO. 189A/TS/OPS/13

REF. NO.

REVISIONS

REV	BY	DATE	DESCRIPTION	PRE'D	CHK'D	APP'D
1	SGH	29-DEC-2015	RE APPROVED FOR CONSTRUCTION	BS	HSI/AW	JH/AHR
0	SGH	16-NOV-2015	APPROVED FOR CONSTRUCTION	BS	HSI/AW	JH/AHR
B	SGH	05-NOV-2015	ISSUED FOR APPROVAL	BS	HSI/AW	JH/AHR
A	BK	27-OCT-2015	ISSUED FOR REVIEW	BS	HSI/AW	JH/AHR

ENGINEERING APPROVAL	BY	DATE
PROCESS		
ELECTRICAL		
INSTRUMENT		
STRUCTURAL		31/12/16
MECHANICAL		
PIPING		
PIPELINE		
PROCESS SAFETY		

PHE WMO APP'D
DATE:
CONTRACTOR APP'D
DATE: 30/12/2015

PROJECT TITLE : EPCI-1 : PHE-12, PHE-24, AND CPP2 PLATFORM AND PIPELINE

PERTAMINA PHE WMO

CONSORTIUM
PT. TIMAS SUPLINDO
PT. GUNANUSA UTAMA FABRICATORS

PHE-12 WELLHEAD PLATFORM
FRAMING ELEVATION SECTION-B

SCALE	DOCUMENT No	SHEET		REV.
¼"=1'-0"	PHEWMO-PHE12-C-SDE-2013	1	OF 1	1

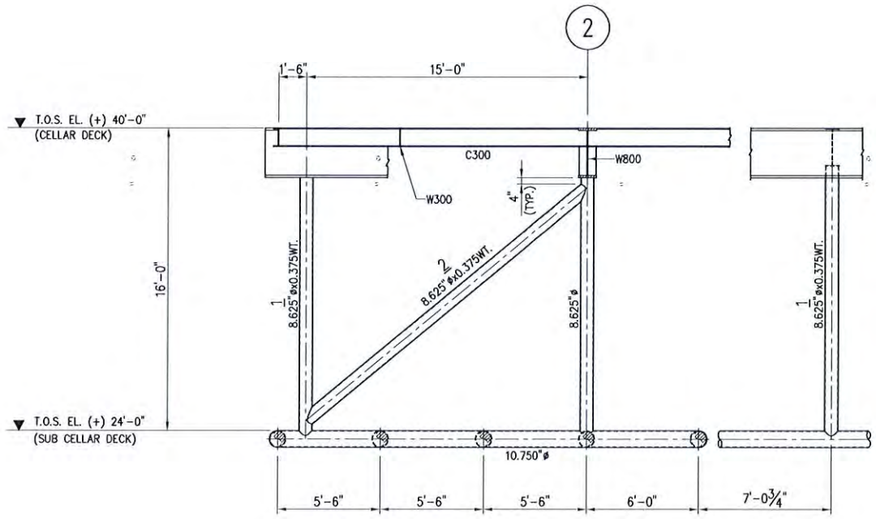

ELEVATION C
SCALE ¼" = 1'-0"

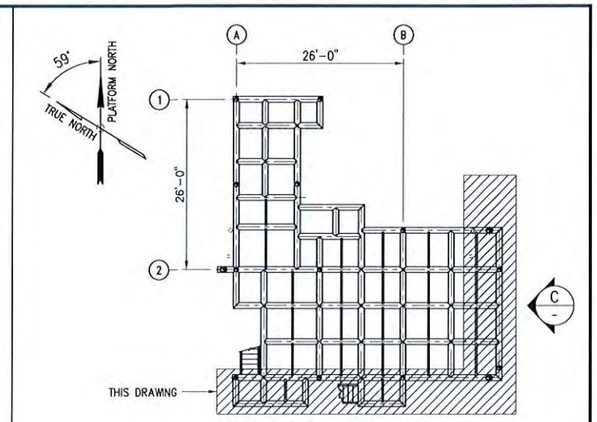

KEY-PLAN D
SCALE ~ N.T.S

MATERIAL TAKE OFF

MARK	DESCRIPTION	MATERIAL SPEC.	L/A/V (*)	QTY	TOTAL L/A/V (*)	UNIT (U)	UNIT WEIGHT (lb/U)	TOTAL WEIGHT (lb)	SPEC.	TYPE
	SUPPLIED BY COMPANY									
1	8.625"øx0.375" WT. PIPE	API 5L X52 PSL2	14.50	3	43.50	ft	33.07	1439	1	I
2	8.625"øx0.375" WT. PIPE	API 5L X52 PSL2	19.44	1	19.44	ft	33.07	643	1	I
3	8.625"øx0.375" WT. PIPE	API 5L X52 PSL2	17.96	1	17.96	ft	33.07	594	1	I
4	8.625"øx0.375" WT. PIPE	API 5L X52 PSL2	19.31	2	38.63	ft	33.07	1277	1	I
							SUB TOTAL WEIGHT =	3953 LB		

SPECIFICATION (SPEC.): 1 = PHEWMO-C-SPE-0101 (REV.0); 2 = –

TYPE CLASSIFICATION (TYPE): I = TYPE I; II = TYPE II; III = TYPE III; IV = TYPE IV

(*) L = LENGTH (ft) ; A = AREA (sq.ft) ; V = VOLUME (lbs/ft)

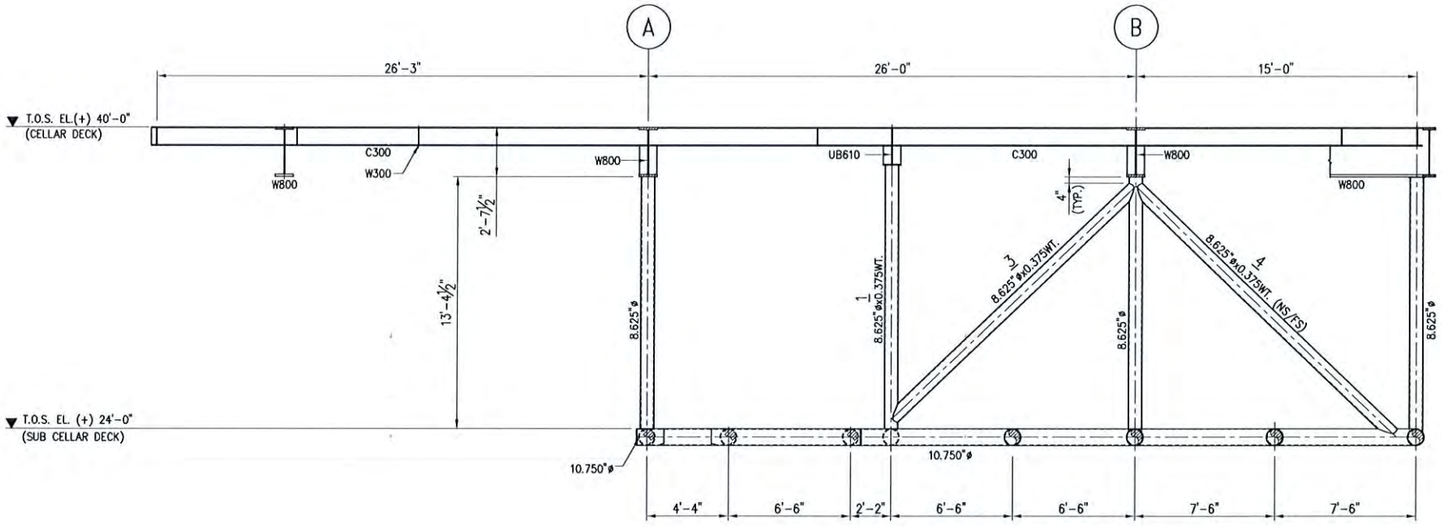

ELEVATION D
SCALE ¼" = 1'-0"

17 NOV 2015

APPROVED FOR CONSTRUCTION

NOTE

CONTRACT NO. 189A/TS/OPS/13

REVISIONS

REV	BY	DATE	DESCRIPTION	PRE'D	CHK'D	APP'D
0	SGH	16-NOV-2015	APPROVED FOR CONSTRUCTION	BS	HSI/AW	JH/AHR
B	BK	05-NOV-2015	ISSUED FOR APPROVAL	BS	HSI/AW	JH/AHR
A	BK	27-OCT-2015	ISSUED FOR REVIEW	BS	HSI/AW	JH/AHR

REF. NO.

ENGINEERING APPROVAL	BY	DATE
PROCESS		
ELECTRICAL		
INSTRUMENT		
STRUCTURAL		
MECHANICAL		
PIPING		
PIPELINE		
PROCESS SAFETY		

PHE WMO APP'D DATE:

CONTRACTOR APP'D DATE: 16/11/2015

PROJECT TITLE : EPCI-1 : PHE-12, PHE-24, AND CPP2 PLATFORM AND PIPELINE

PERTAMINA PHE WMO

CONSORTIUM

PT. TIMAS SUPLINDO PT. GUNANUSA UTAMA FABRICATORS

PHE-12 WELLHEAD PLATFORM
SUB CELLAR FRAMING ELEVATION
SECTION-C & D

SCALE	DOCUMENT No	SHEET		REV.
¼"=1'-0"	PHEWMO-PHE12-C-SDE-2014	1	OF 1	0

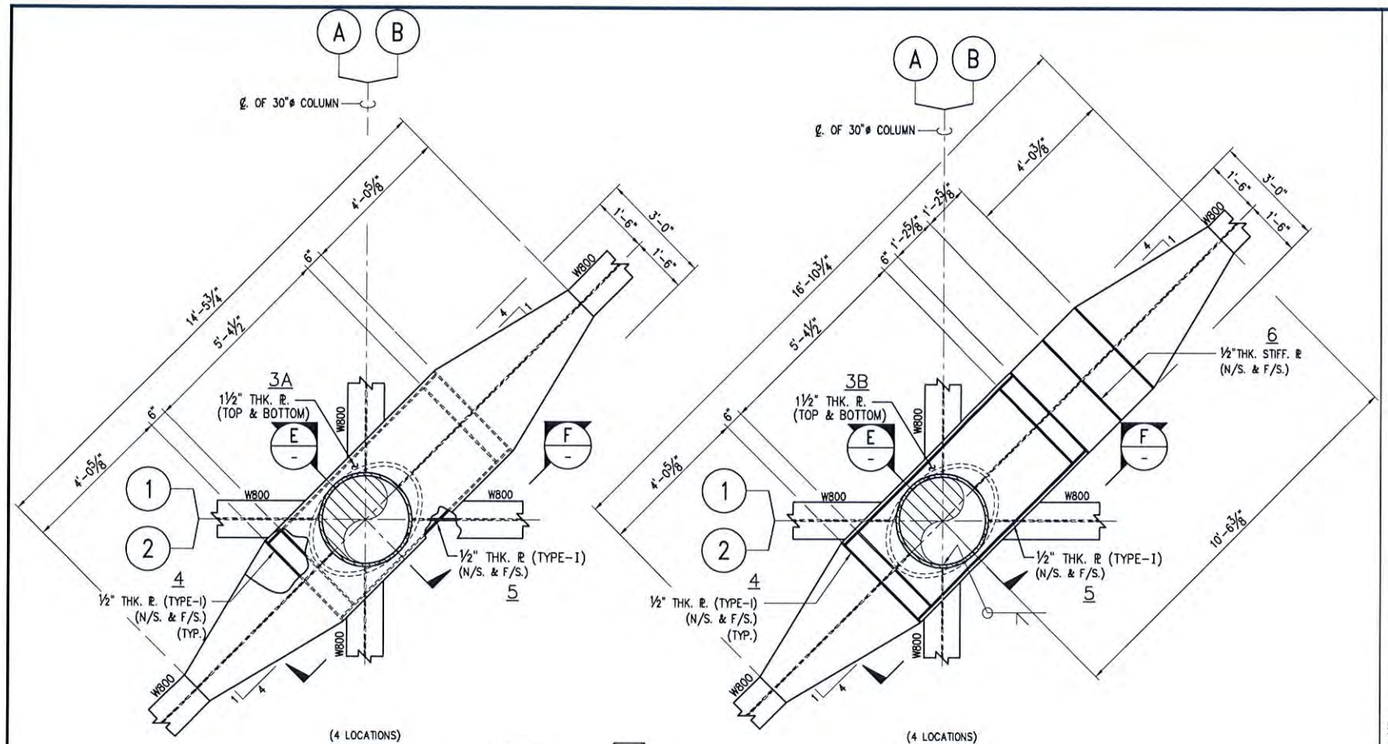

DETAIL 3 / 2006
SCALE 1/2" = 1'-0"

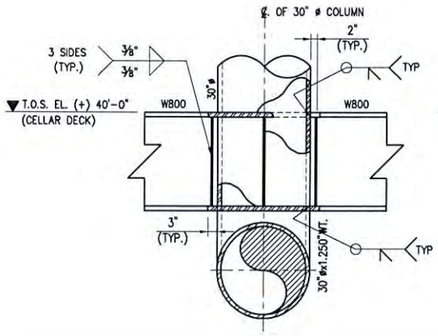

SECTION E
SCALE 1/2" = 1'-0"

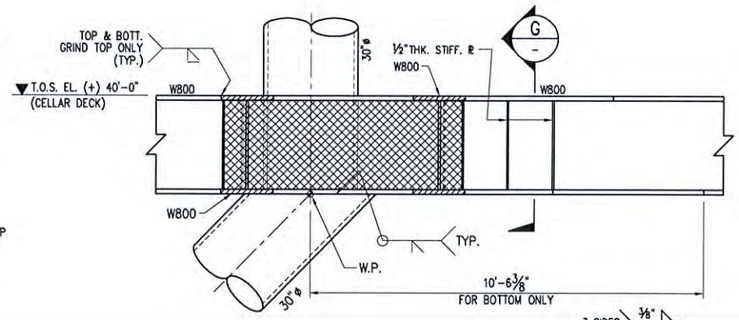

SECTION F
SCALE 1/2" = 1'-0"

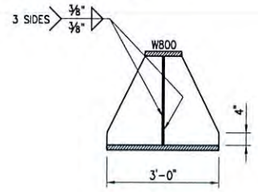

SECTION G
SCALE 1/2" = 1'-0"

APPROVED FOR CONSTRUCTION

MATERIAL TAKE OFF

MARK	DESCRIPTION	MATERIAL SPEC.	L/A/V (*)	QTY	TOTAL L/A/V (*)	UNIT (U)	UNIT WEIGHT (lb/U)	TOTAL WEIGHT (lb)	SPEC.	TYPE
	SUPPLIED BY COMPANY									
1	2" THK. PLATE	ASTM A572 Gr.50	30.25	2	60.50	FT²	81.67	4941	1	II
2	2" THK. PLATE	ASTM A572 Gr.50	20.25	8	162.00	FT²	81.67	13231	1	II
3A	1 1/2" THK. PLATE	ASTM A572 Gr.50	43.44	4	173.76	FT²	61.25	10643	1	I
3B	1 1/2" THK. PLATE	ASTM A572 Gr.50	50.69	4	202.76	FT²	61.25	12419	1	I
	SUPPLIED BY CONTRACTOR									
4	1/2" THK. PLATE	ASTM A36	7.17	16	114.72	FT²	20.42	2343	1	III
5	1/2" THK. PLATE	ASTM A36	15.34	8	122.72	FT²	20.42	2506	1	III
6	1/2" THK. PLATE	ASTM A36	3.51	16	56.16	FT²	20.42	1147	1	III
							SUB TOTAL WEIGHT =	47230 LB		

SPECIFICATION (SPEC.): 1 = PHEWMO-C-SPE-0101 (REV.0); 2 = -

TYPE CLASSIFICATION (TYPE): I = TYPE I, II = TYPE II, III = TYPE III, IV = TYPE IV

(*) L = LENGTH (ft) ; A = AREA (sq.ft) ; V = VOLUME (lbs/ft)

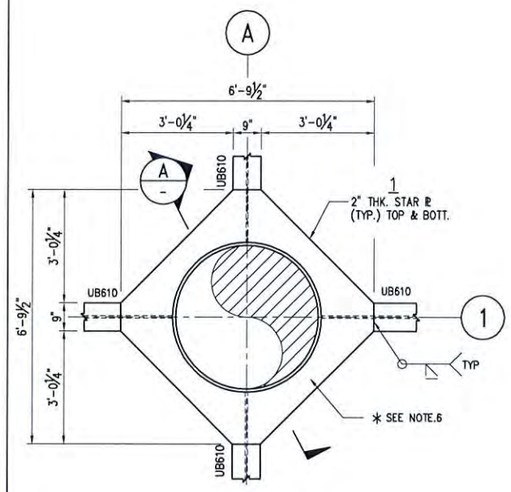

DETAIL 1 / 2001
SCALE 1/2" = 1'-0"

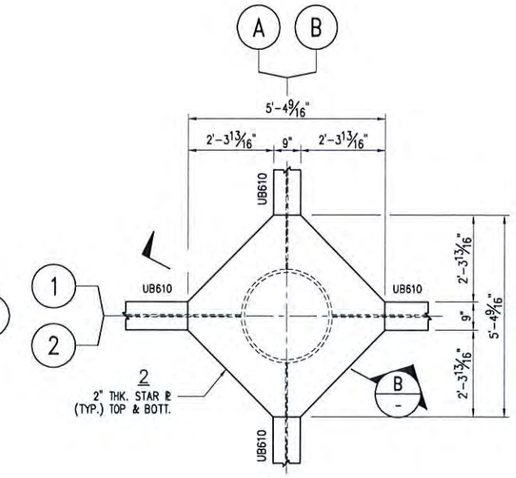

DETAIL 2 / 2001
SCALE 1/2" = 1'-0"

(3 LOCATIONS)

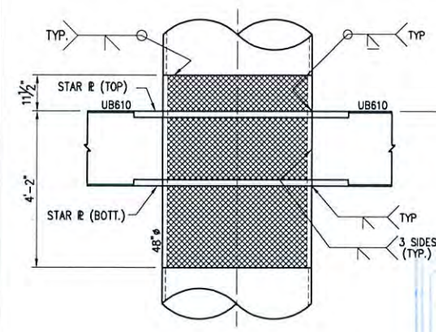

SECTION A
SCALE 1/2" = 1'-0"

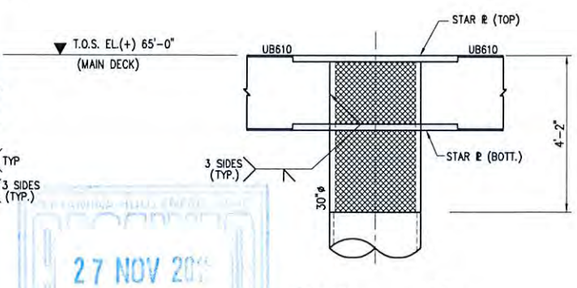

SECTION B
SCALE 1/2" = 1'-0"

NOTE

1. FOR GENERAL NOTES REFER. TO DWG. NO. PHEWMO-PHE12-C-SDE-2000
2. ALL DIMENSIONS ARE IN FEET AND INCH UNLESS NOTED OTHERWISE.
3. ALL MEMBERS ARE TYPE-I UNLESS NOTED OTHERWISE.
4. MEMBERS MARKED WITH ▒ SHALL BE TYPE-II MATERIAL.
5. FOR TYPICAL WELDING DETAILS REFER TO DWG. NO. PHEWMO-PHE12-C-GEN-2005
6. PADEYE LOCATION AND DETAILS WILL BE SHOWN IN PADEYE DRAWINGS.

CONTRACT NO. 189A/TS/OPS/13

REVISIONS

REV.	BY	DATE	DESCRIPTION	PRE'D	CHK'D	APP'D
0	BK	26-NOV-2015	APPROVED FOR CONSTRUCTION	BS	HSI/AW	JH/AHR
B	SGH	16-NOV-2015	ISSUED FOR APPROVAL	BS	HSI/AW	JH/AHR
A	SGH	04-NOV-2015	ISSUED FOR REVIEW	BS	HSI/AW	JH/AHR

REF. NO.

ENGINEERING APPROVAL	BY	DATE
PROCESS		
ELECTRICAL		
INSTRUMENT		
STRUCTURAL		27/11/15
MECHANICAL		
PIPING		
PIPELINE		
PROCESS SAFETY		

PHE WMO APP'D — DATE:
CONTRACTOR APP'D — DATE: 26/11/2015

PROJECT TITLE : EPCI-1 : PHE-12, PHE-24, AND CPP2 PLATFORM AND PIPELINE

PERTAMINA PHE WMO

CONSORTIUM
PT. TIMAS SUPLINDO
PT. GUNANUSA UTAMA FABRICATORS

PHE-12 WELLHEAD PLATFORM
DECK JOINT CONNECTION
DETAILS

SCALE	DOCUMENT No	SHEET			REV.
AS SHOWN	PHEWMO-PHE12-C-SDE-2015	1	OF	3	0

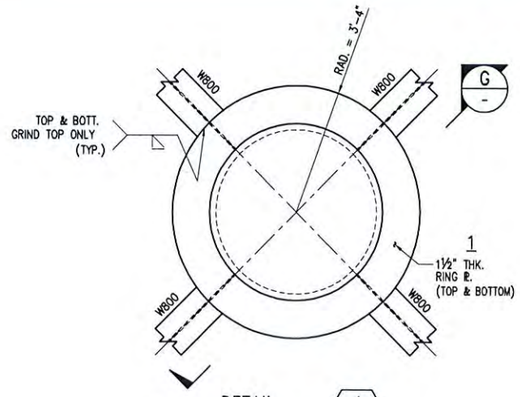

DETAIL 4 / 2005
SCALE ½" = 1'-0"

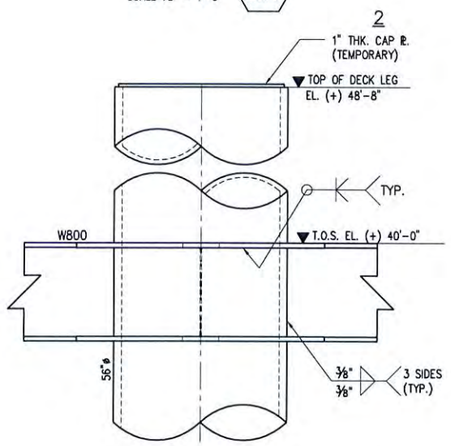

SECTION G
SCALE ½" = 1'-0"

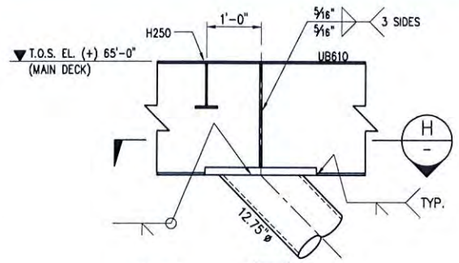

DETAIL 7 / 2008
SCALE 3/4" = 1'-0"

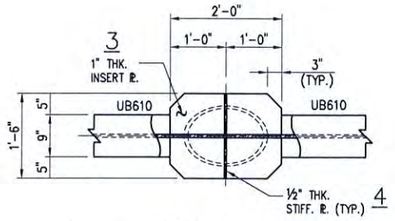

SECTION H

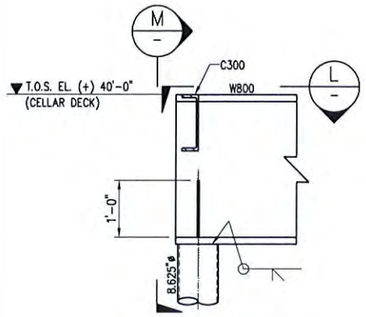

DETAIL 9 / 2010
SCALE 3/4" = 1'-0"

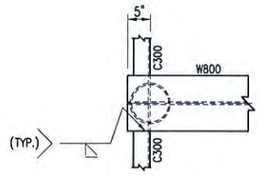

SECTION L

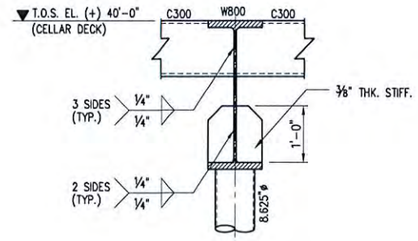

SECTION M

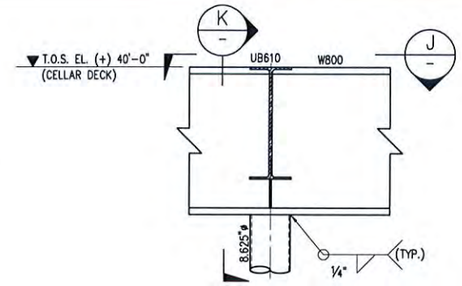

DETAIL 8 / 2009
SCALE 3/4" = 1'-0"

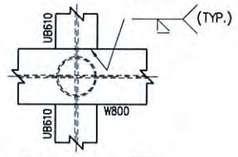

SECTION J

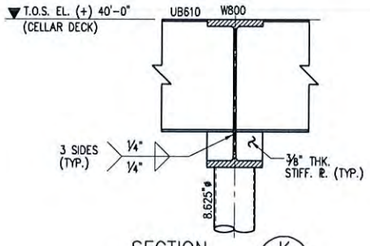

SECTION K

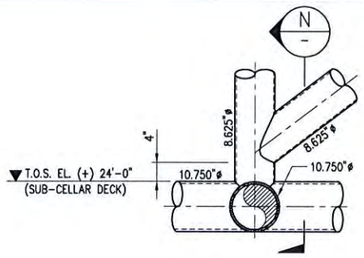

DETAIL 10 / 2010
SCALE 3/4" = 1'-0"

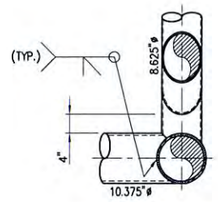

SECTION N

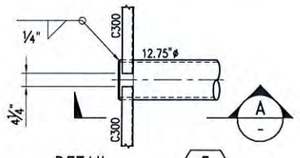

DETAIL 5 / 2004
SCALE ½" = 1'-0"

APPROVED FOR CONSTRUCTION

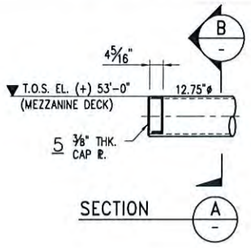

SECTION A

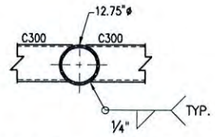

SECTION B

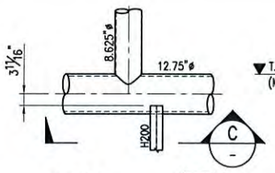

DETAIL 6 / 2004
SCALE ½" = 1'-0"

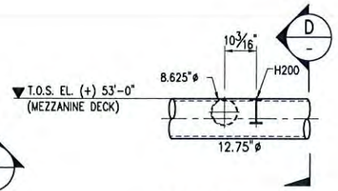

SECTION C

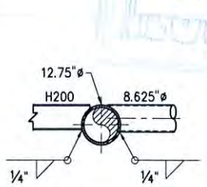

SECTION D

MATERIAL TAKE OFF

MARK	DESCRIPTION	MATERIAL SPEC.	L/A/V (*)	QTY	TOTAL L/A/V (*)	UNIT (U)	UNIT WEIGHT (lb/U)	TOTAL WEIGHT (lb)	SPEC.	TYPE
	SUPPLIED BY COMPANY									
1	1 ½" THK. PLATE	ASTM A572 Gr.50	34.89	2	69.78	FT²	61.25	4274	1	I
2	1 " THK. PLATE	ASTM A572 Gr.50	15.61	1	15.61	FT²	40.83	637	1	I
3	1 " THK. PLATE	ASTM A572 Gr.50	3.00	8	24.00	FT²	40.83	980	1	I
	SUPPLIED BY CONTRACTOR									
4	½ " THK. PLATE	ASTM A36	1.31	16	20.96	FT2	20.42	428	1	III
5	⅜ " THK. PLATE	ASTM A36	0.79	8	6.32	FT2	15.31	97	1	III
							SUB TOTAL WEIGHT =	6416 LB		

SPECIFICATION (SPEC.): 1 = PHEWMO-C-SPE-0101 (REV.0); 2 = -

TYPE CLASSIFICATION (TYPE): I = TYPE I, II = TYPE II, III = TYPE III, IV = TYPE IV

(*) L = LENGTH (ft) ; A = AREA (sq.ft) ; V = VOLUME (lbs/ft)

NOTE

1. FOR GENERAL NOTES REFER. TO DWG. NO. PHEWMO-PHE12-C-SDE-2000
2. ALL DIMENSIONS ARE IN FEET AND INCH UNLESS NOTED OTHERWISE.
3. FOR TYPICAL WELDING DETAILS REFER TO DWG. NO. PHEWMO-PHE12-C-GEN-2005

CONTRACT NO. 189A/TS/OPS/13

REVISIONS

REV	BY	DATE	DESCRIPTION	PRE'D	CHK'D	APP'D
0	BK	26-NOV-2015	APPROVED FOR CONSTRUCTION	BS	HSI/AW	JH/AHR
B	SGH	16-NOV-2015	ISSUED FOR APPROVAL	BS	HSI/AW	JH/AHR
A	SGH	04-NOV-2015	ISSUED FOR REVIEW	BS	HSI/AW	JH/AHR

REF. NO.

ENGINEERING APPROVAL	BY	DATE
PROCESS		
ELECTRICAL		
INSTRUMENT		
STRUCTURAL		23/11/15
MECHANICAL		
PIPING		
PIPELINE		
PROCESS SAFETY		

PHE WMO APP'D — DATE:
CONTRACTOR APP'D — DATE: 26/11/2015

PROJECT TITLE : EPCI-1 : PHE-12, PHE-24, AND CPP2 PLATFORM AND PIPELINE

PERTAMINA PHE WMO

CONSORTIUM

PT. TIMAS SUPLINDO — PT. GUNANUSA UTAMA FABRICATORS

PHE-12 WELLHEAD PLATFORM
DECK JOINT CONNECTION
DETAILS

SCALE	DOCUMENT No	SHEET			REV.
AS SHOWN	PHEWMO-PHE12-C-SDE-2015	2	OF	3	0

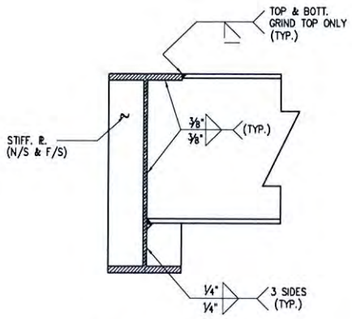

DETAIL 11
W600 TO W800
UB610 TO W800
SINGLE SIDE

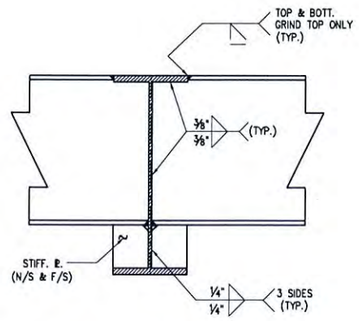

DETAIL 12
W600 TO W800
UB610 TO W800
W300 TO W800
DOUBLE SIDE

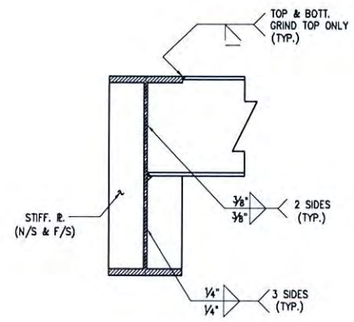

DETAIL 13
W300 TO W800
W300 TO W600
H250 TO W600
SINGLE SIDE

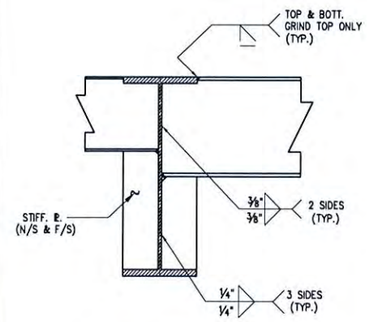

DETAIL 14
W600 & W300 TO W800
DOUBLE SIDE

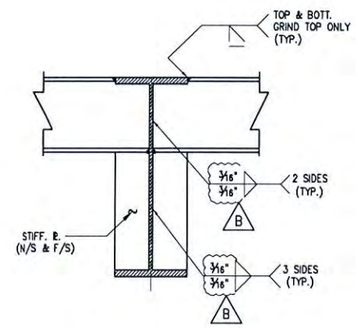

DETAIL 15
H250 TO W800
H250 TO W600
DOUBLE SIDE

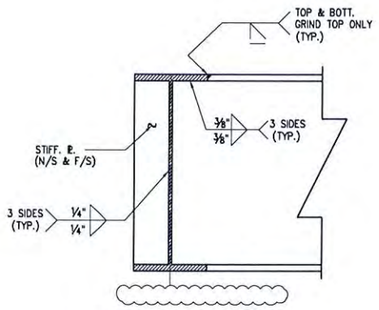

DETAIL 16
W800 TO W800
W600 TO W600
W300 TO W300
H200 TO H200
SINGLE SIDE

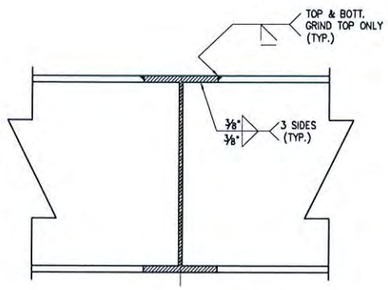

DETAIL 17
W800 TO W800
W600 TO W600
W300 TO W300
H250 TO H250
H200 TO H200
DOUBLE SIDE

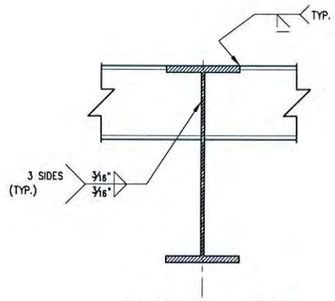

DETAIL 18
C300 TO W800
C300 TO W600
DOUBLE SIDE

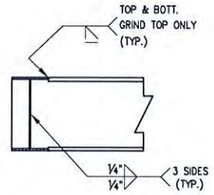

DETAIL 19
C300 TO W300
SINGLE SIDE

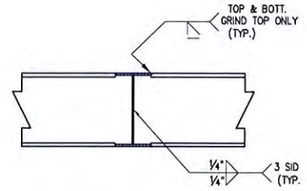

DETAIL 20
C300 TO W300
DOUBLE SIDE

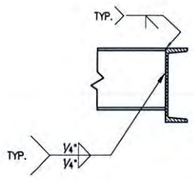

DETAIL 21
H250 TO C300
SINGLE SIDE

PLATE SCHEDULE	
MEMBERS V/B STIFF/WEB INSERT PLATE	
W600 TO W800	1/2"THK. STIFF PL.
W300 TO W800	3/8"THK. STIFF PL.
W300 TO W600	3/8"THK. STIFF PL.
W300 TO W300	3/8"THK. STIFF PL.
W300 TO C300	3/8"THK. STIFF PL.
H250 TO W800	3/8"THK. STIFF PL.

APPROVED FOR CONSTRUCTION

27 NOV 2015

NOTE

1. FOR GENERAL NOTES REFER. TO DWG. NO. PHEWMO-PHE12-C-SDE-2000
2. ALL DIMENSIONS ARE IN FEET AND INCH UNLESS NOTED OTHERWISE.
3. FOR TYPICAL WELDING DETAILS REFER TO DWG. NO. PHEWMO-PHE12-C-GEN-2005

CONTRACT NO. 189A/TS/OPS/13

REVISIONS

REV	BY	DATE	DESCRIPTION	PRE'D	CHK'D	APP'D
0	BK	26-NOV-2015	APPROVED FOR CONSTRUCTION	BS	HSI/AW	JH/AHR
B	SGH	16-NOV-2015	ISSUED FOR APPROVAL	BS	HSI/AW	JH/AHR
A	SGH	04-NOV-2015	ISSUED FOR REVIEW	BS	HSI/AW	JH/AHR

REF. NO.

ENGINEERING APPROVAL	BY	DATE
PROCESS		
ELECTRICAL		
INSTRUMENT		
STRUCTURAL		27/11/15
MECHANICAL		
PIPING		
PIPELINE		
PROCESS SAFETY		

PHE WMO APP'D — DATE:
CONTRACTOR APP'D — DATE: 26/11/2015

PROJECT TITLE : EPCI-1 : PHE-12, PHE-24, AND CPP2 PLATFORM AND PIPELINE

PERTAMINA PHE WMO

CONSORTIUM
PT. TIMAS SUPLINDO — PT. GUNANUSA UTAMA FABRICATORS

PHE-12 WELLHEAD PLATFORM
DECK JOINT CONNECTION
DETAILS

SCALE	DOCUMENT No	SHEET			REV.
AS SHOWN	PHEWMO-PHE12-C-SDE-2015	3	OF	3	0

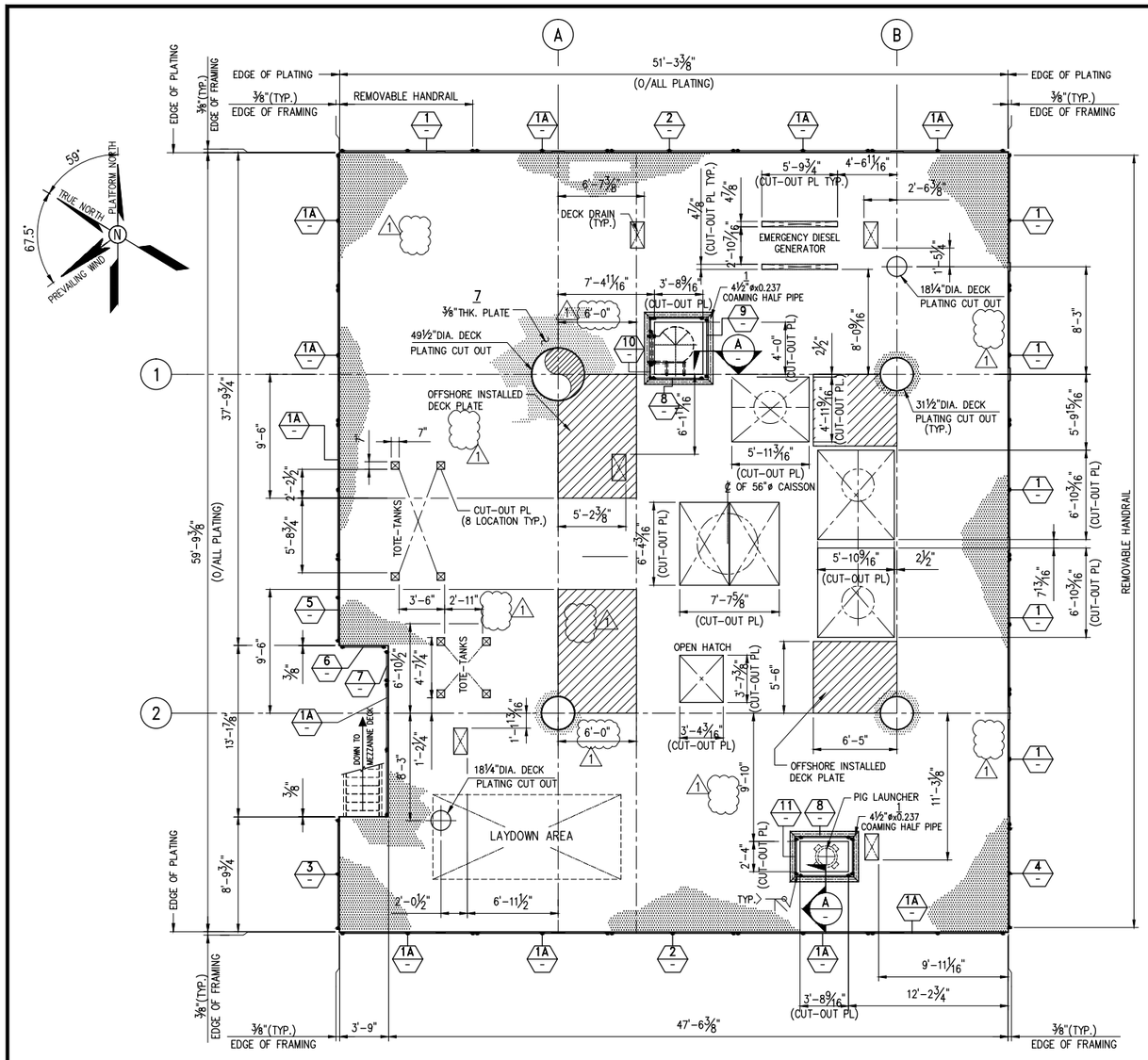

MAIN DECK FLOORING AND HANDRAIL LAYOUT

SCALE ~ 3/16" = 1'-0" T.O.R. EL.(+) 65'-3/8"

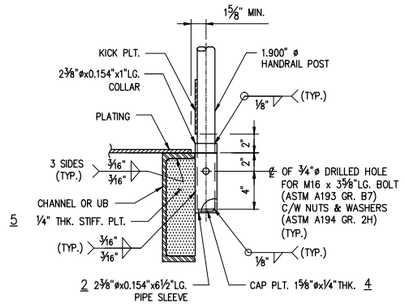

DETAIL 1

SCALE 1 1/2"=1'-0"

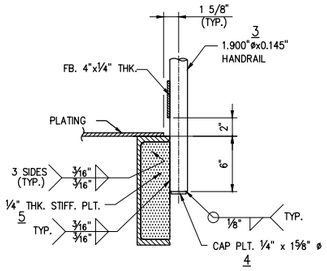

DETAIL 2

SCALE 1 1/2"=1'-0"

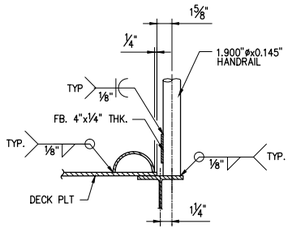

SECTION A

SCALE 1 1/2"=1'-0"

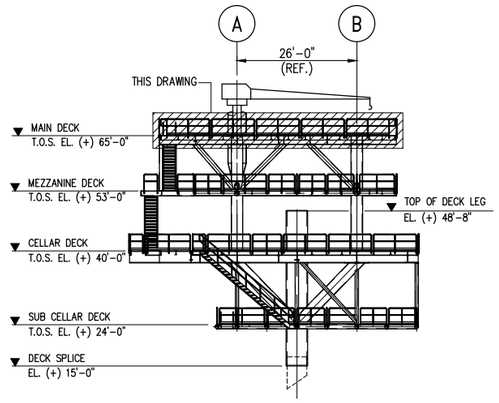

KEY-ELEVATION

SCALE 1/16" = 1'-0"

MATERIAL TAKE OFF

MARK	DESCRIPTION	MATERIAL SPEC.	L/A/V (*)	QTY	TOTAL L/A/V (*)	UNIT (U)	UNIT WEIGHT (lb/U)	TOTAL WEIGHT (lb)	SPEC.	TYPE
1	SUPPLIED BY COMPANY									
1	4.500"øx0.237" W.T. PIPE	API 5L X52 PSL2	33.86	1	33.86	FT	10.79	365	1	I
	SUPPLIED BY CONTRACTOR									
2	2.375"øx0.154" W.T. PIPE	API 5L Gr.B	0.604	21	12.684	FT	3.652	46	1	III
3	1.900"øx0.145" W.T. PIPE	API 5L Gr.B	1082.25	1	1082.25	FT	2.717	2940	1	III
4	1/4" THK. PLATE	ASTM A36	0.019	70	1.33	FT^2	10.21	14	1	III
5	1/4"THK. PLATE	ASTM A36	0.23	70	16.1	FT^2	10.21	164	1	III
6	4"x1/4"THK. FLAT BAR	ASTM A36	243.44	1	243.44	FT	3.40	828	1	III
7	3/8" THK. DECK PLATE	ASTM A36	3016.32	1	3016.32	FT^2	15.31	46180	1	III
								SUB TOTAL WEIGHT =	50537 Lb	

SPECIFICATION : 1 = PHEWMO-C-SPE-0101 (REV.0)
(SPEC.) 2 = –

(*) L = LENGTH (ft) ; A = AREA (sq.ft) ; V = VOLUME (lbs/ft)

TYPE CLASSIFICATION : I = TYPE I III = TYPE III
(TYPE) II = TYPE II IV = TYPE IV

HANDRAIL PANEL SCHEDULE

PIECE MARK	LENGTH	NO. REQ'D	REMARK
HR-1	10'-0"	6	REMOVABLE/DOUBLE PANEL
HR-1A	10'-0"	11	FIXED/DOUBLE PANEL
HR-2	9'-4"	2	FIXED/DOUBLE PANEL
HR-3	8'-3"	1	FIXED/DOUBLE PANEL
HR-4	7'-7"	1	REMOVABLE/DOUBLE PANEL
HR-5	6'-3"	1	FIXED/DOUBLE PANEL
HR-6	3'-2"	1	FIXED/SINGLE PANEL
HR-7	2'-2"	1	FIXED/SINGLE PANEL
HR-8	3'-11"	4	FIXED/SINGLE PANEL
HR-9	4'-4"	1	FIXED/SINGLE PANEL
HR-10	1'-0"	2	FIXED/SINGLE PANEL
HR-11	2'-8"	2	FIXED/SINGLE PANEL

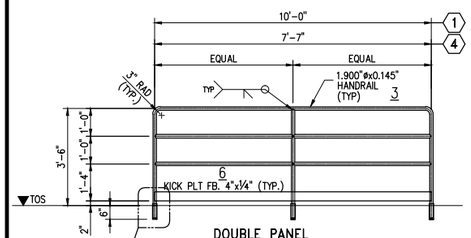

DOUBLE PANEL

TYPICAL REMOVABLE HANDRAIL DETAILS

SCALE : 3/8" = 1'-0"

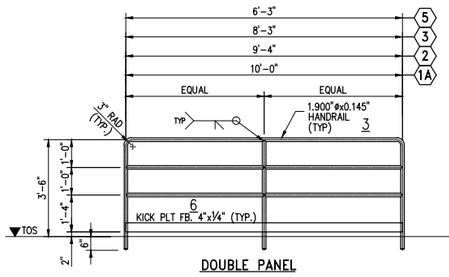

DOUBLE PANEL

TYPICAL FIXED HANDRAIL DETAILS

SCALE : 3/8" = 1'-0"

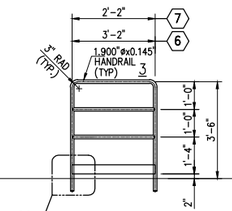

SINGLE PANEL

SCALE : 3/8" = 1'-0"

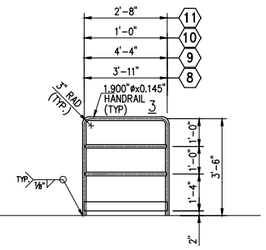

SINGLE PANEL

SCALE : 3/8" = 1'-0"

NOTE

1. FOR GENERAL NOTES REFER. TO DWG. NO. PHEWMO-PHE12-C-SDE-2000
2. ALL DIMENSIONS ARE IN FEET AND INCH UNLESS NOTED OTHERWISE.
3. DECK PLATING MARKED WITH ▨ TO BE OFFSHORE INSTALLED IN ORDER TO ENABLE DECK LIFTING (INSTALLATION)

CONTRACT NO. 189A/TS/OPS/13

REVISIONS

REV	BY	DATE	DESCRIPTION	PRE'D	CHK'D	APP'D
1	SGH	01-FEB-2016	RE-APPROVED FOR CONSTRUCTION	BS	HSI/AW	JH/AHR
0	SPR	07-JAN-2016	APPROVED FOR CONSTRUCTION	BS	HSI/AW	JH/AHR
B	BK	26-NOV-2015	ISSUED FOR APPROVAL	BS	HSI/AW	JH/AHR
A	BK	13-NOV-2015	ISSUED FOR REVIEW	BS	HSI/AW	JH/AHR

REF. NO.

ENGINEERING APPROVAL	BY	DATE
PROCESS		
ELECTRICAL		
INSTRUMENT		
STRUCTURAL		
MECHANICAL		
PIPING		
PIPELINE		
PROCESS SAFETY		

PHE WMO APP'D

DATE:

CONTRACTOR APP'D

DATE:

PROJECT TITLE : EPCI-1 : PHE-12, PHE-24, AND CPP2 PLATFORM AND PIPELINE

PERTAMINA PHE WMO

CONSORTIUM

PT. TIMAS SUPLINDO PT. GUNANUSA UTAMA FABRICATORS

PHE-12 WELLHEAD PLATFORM

MAIN DECK FLOORING AND HANDRAIL LAYOUT

SCALE	DOCUMENT No	SHEET		REV.
AS SHOWN	PHEWMO-PHE12-C-SDE-2016	1	OF 1	1

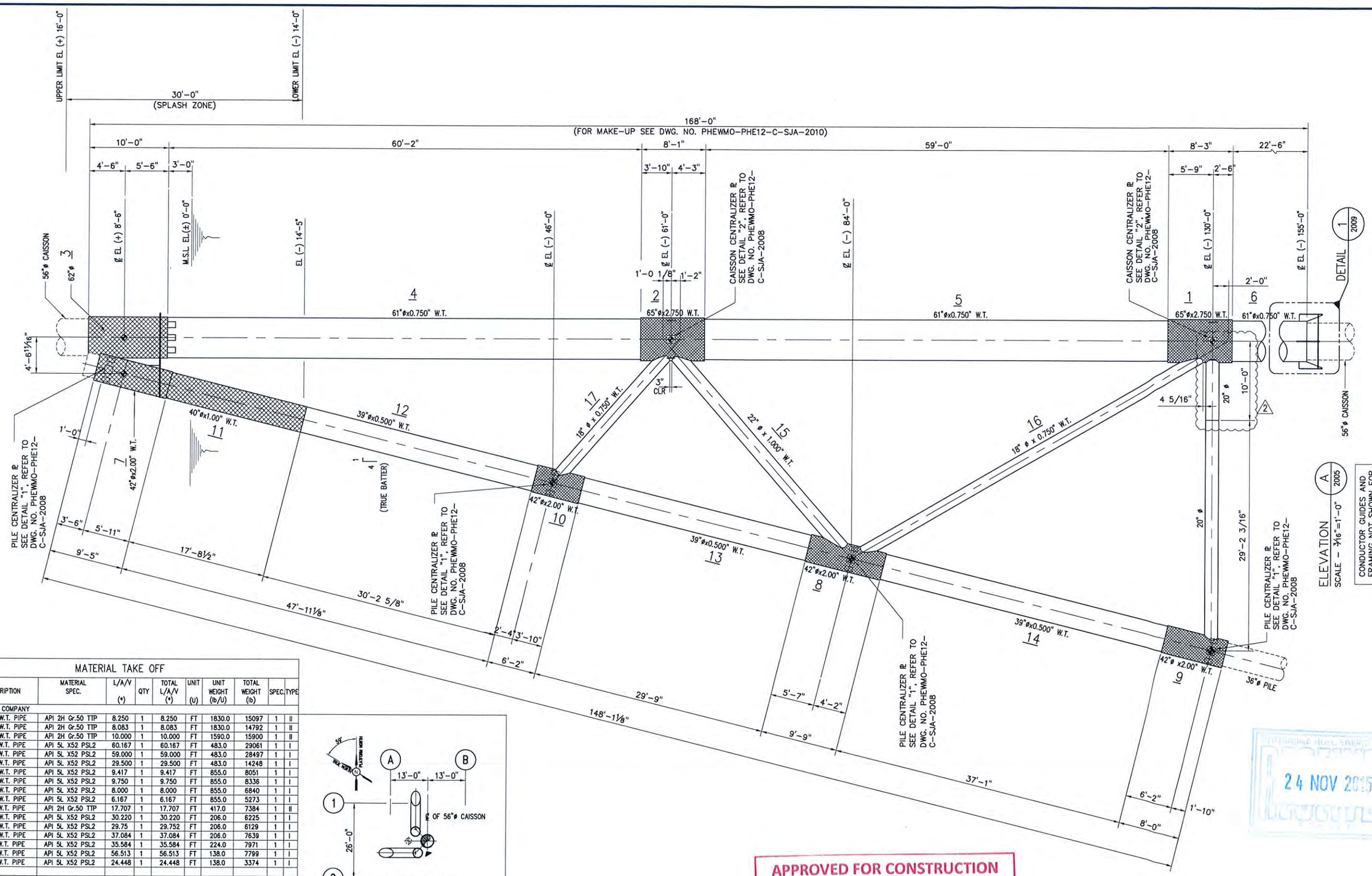

MATERIAL TAKE OFF

MARK	DESCRIPTION	MATERIAL SPEC.	L/A/V (*)	QTY	TOTAL L/A/V (*)	UNIT (U)	UNIT WEIGHT (lb/U)	TOTAL WEIGHT (lb)	SPEC.	TYPE
	SUPPLIED BY COMPANY									
1	65"øx2.750" W.T. PIPE	API 2H Gr.50 TTP	8.250	1	8.250	FT	1830.0	15097	1	II
2	65"øx2.750" W.T. PIPE	API 2H Gr.50 TTP	8.083	1	8.083	FT	1830.0	14792	1	II
3	62"øx2.500" W.T. PIPE	API 2H Gr.50 TTP	10.000	1	10.000	FT	1590.0	15900	1	II
4	61"øx0.750" W.T. PIPE	API 5L X52 PSL2	60.167	1	60.167	FT	483.0	29061	1	I
5	61"øx0.750" W.T. PIPE	API 5L X52 PSL2	59.000	1	59.000	FT	483.0	28497	1	I
6	61"øx0.750" W.T. PIPE	API 5L X52 PSL2	29.500	1	29.500	FT	483.0	14248	1	I
7	42"øx2.000" W.T. PIPE	API 5L X52 PSL2	9.417	1	9.417	FT	855.0	8051	1	I
8	42"øx2.000" W.T. PIPE	API 5L X52 PSL2	9.750	1	9.750	FT	855.0	8336	1	I
9	42"øx2.000" W.T. PIPE	API 5L X52 PSL2	8.000	1	8.000	FT	855.0	6840	1	I
10	42"øx2.000" W.T. PIPE	API 5L X52 PSL2	6.167	1	6.167	FT	855.0	5273	1	I
11	40"øx1.000" W.T. PIPE	API 2H Gr.50 TTP	17.707	1	17.707	FT	417.0	7384	1	II
12	39"øx0.500" W.T. PIPE	API 5L X52 PSL2	30.220	1	30.220	FT	206.0	6225	1	I
13	39"øx0.500" W.T. PIPE	API 5L X52 PSL2	29.75	1	29.752	FT	206.0	6129	1	I
14	39"øx0.500" W.T. PIPE	API 5L X52 PSL2	37.084	1	37.084	FT	206.0	7639	1	I
15	22"øx1.000" W.T. PIPE	API 5L X52 PSL2	35.584	1	35.584	FT	224.0	7971	1	I
16	18"øx0.750" W.T. PIPE	API 5L X52 PSL2	56.513	1	56.513	FT	138.0	7799	1	I
17	18"øx0.750" W.T. PIPE	API 5L X52 PSL2	24.448	1	24.448	FT	138.0	3374	1	I
					SUB TOTAL WEIGHT =			192616 Lb		

SPECIFICATION (SPEC.): 1 = PHEWMO-C-SPE-0101 (REV.0); 2 = -

TYPE CLASSIFICATION (TYPE): I = TYPE I; II = TYPE II; III = TYPE III; IV = TYPE IV

(*) L = LENGTH (ft) ; A = AREA (sq.ft) ; V = VOLUME (lbs/ft)

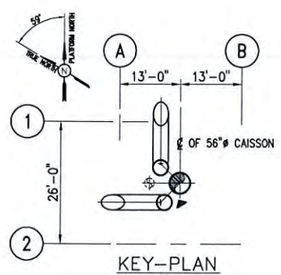

KEY-PLAN
SCALE 1/16" = 1'-0"

NOTE

1. FOR GENERAL NOTES REFER.TO DWG. NO. PHEWMO-PHE12-C-GEN-2001.
2. ALL STRUCTURAL STEEL MATERIALS IN THIS DWG SHALL BE TYPE 'I' U.N.O.
3. STRUCTURAL STEEL MARKED WITH ▩ SHALL BE MATERIALS TYPE 'II'.
4. THE TUBULLAR "CAN" LENGTH INDICATED IN THE DRAWING DO NOT INCLUDE TAPER LENGTHS AT ENDS FOR CHANGE IN TUBULLAR THICKNESSES

CONTRACT NO. 189A/TS/OPS/13

REVISIONS

REV	BY	DATE	DESCRIPTION	PRE'D	CHK'D	APP'D
2	SGH	23-NOV-2015	RE-APPROVED FOR CONSTRUCTION	BS	HSI/AW	JH/AHR
1	SGH	02-NOV-2015	RE-APPROVED FOR CONSTRUCTION	BS	HSI/AW	JH/AHR
0	SGH	21-OCT-2015	APPROVED FOR CONSTRUCTION	BS	HSI/AW	JH/AHR
B	SGH	16-OCT-2015	ISSUED FOR APPROVAL	BS	HSI/AW	JH/AHR
A	SGH	03-OCT-2015	ISSUED FOR REVIEW	WS	HSI/AW	JH/AHR

REF. NO.

ENGINEERING APPROVAL	BY	DATE
PROCESS		
ELECTRICAL		
INSTRUMENT		
STRUCTURAL		25/11/15
MECHANICAL		
PIPING		
PIPELINE		
PROCESS SAFETY		

PHE WMO APP'D — DATE:

CONTRACTOR APP'D — DATE: 25/11/2015

PROJECT TITLE : EPCI-1 : PHE-12, PHE-24, AND CPP2 PLATFORM AND PIPELINE

PERTAMINA PHE WMO

CONSORTIUM

PT. TIMAS SUPLINDO — PT. GUNANUSA UTAMA FABRICATORS

PHE-12 WELLHEAD PLATFORM
GUARDIAN SLEEVE
ELEVATION-A

SCALE	DOCUMENT No	SHEET	REV.
AS SHOWN	PHEWMO-PHE12-C-SJA-2002	1 OF 1	2

MATERIAL TAKE OFF

MARK	DESCRIPTION	MATERIAL SPEC.	L/A/V (*)	QTY	TOTAL L/A/V (*)	UNIT (U)	UNIT WEIGHT (lb/U)	TOTAL WEIGHT (lb)	SPEC.	TYP.
	SUPPLIED BY COMPANY									
1	42"ø x 2.000" W.T. PIPE	API 5L X52 PSL2	9.417	1	9.417	FT	855.0	8051	1	I
2	42"ø x 2.000" W.T. PIPE	API 5L X52 PSL2	9.750	1	9.750	FT	855.0	8336	1	I
3	42"ø x 2.000" W.T. PIPE	API 5L X52 PSL2	8.000	1	8.000	FT	855.0	6840	1	I
4	42"ø x 2.000" W.T. PIPE	API 5L X52 PSL2	6.167	1	6.167	FT	855.0	5273	1	I
5	40"ø x 1.000" W.T. PIPE	API 2H Gr.50 TTP	17.707	1	17.707	FT	417.0	7384	1	II
6	39"ø x 0.500" W.T. PIPE	API 5L X52 PSL2	37.083	1	37.083	FT	206.0	7639	1	I
7	39"ø x 0.500" W.T. PIPE	API 5L X52 PSL2	29.752	1	29.752	FT	206.0	6129	1	I
8	39"ø x 0.500" W.T. PIPE	API 5L X52 PSL2	30.22	1	30.22	FT	206.0	6225	1	I
9	22"ø x 1.000" W.T. PIPE	API 5L X52 PSL2	35.584	1	35.584	FT	224.0	7971	1	I
10	18"ø x 0.750" W.T. PIPE	API 5L X52 PSL2	56.513	1	56.513	FT	138.0	7799	1	I
11	18"ø x 0.750" W.T. PIPE	API 5L X52 PSL2	24.448	1	24.448	FT	138.0	3374	1	I
					SUB TOTAL WEIGHT =			75021 Lb		

SPECIFICATION (SPEC.): 1 = PHEWMO-C-SPE-0101 (REV.0); 2 = -

TYPE CLASSIFICATION (TYPE): I = TYPE I, II = TYPE II, III = TYPE III, IV = TYPE IV

(*) L = LENGTH (ft) ; A = AREA (sq.ft) ; V = VOLUME (lbs/ft)

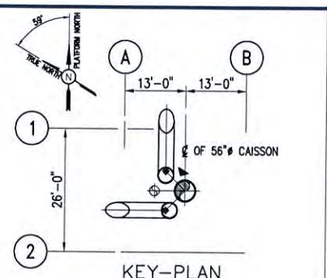

KEY-PLAN
SCALE 1/16" = 1'-0"

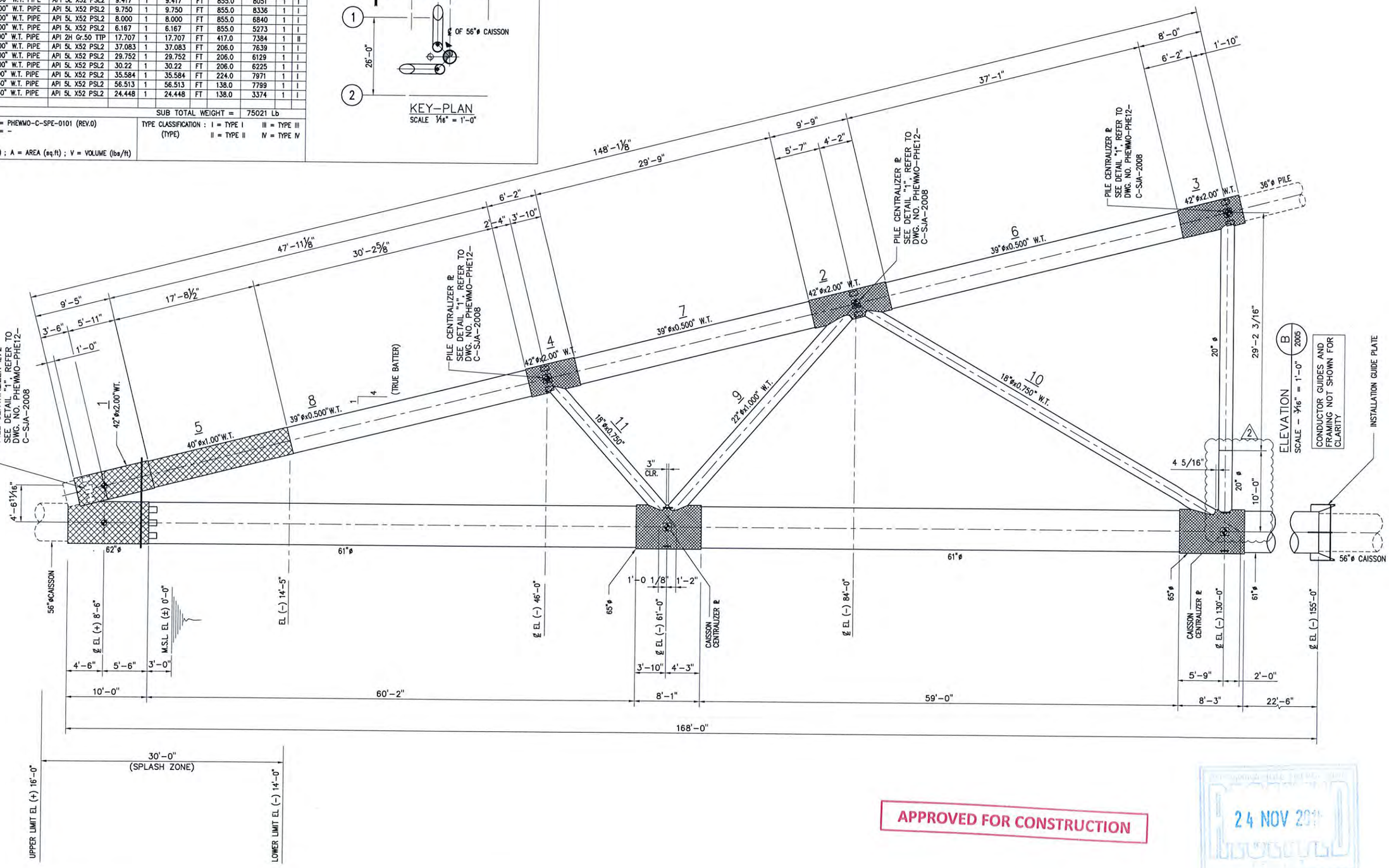

APPROVED FOR CONSTRUCTION

24 NOV 2015

NOTE

1. FOR GENERAL NOTES REFER TO DWG. NO. PHEWMO-PHE12-C-GEN-2001.
2. FOR PILE MAKE-UP, SEE DWG. NO PHEWMO-PHE12-C-SJA-2004.
3. ALL STRUCTURAL STEEL MATERIALS IN THIS DWG SHALL BE TYPE 'I' U.N.O.
4. STRUCTURAL STEEL MARKED WITH ▩ SHALL BE MATERIALS TYPE 'II'.
5. THE TUBULLAR "CAN" LENGTH INDICATED IN THE DRAWING DO NOT INCLUDE TAPER LENGTHS AT ANDS FOR CHANGE IN TUBULLAR THICKNESSES

CONTRACT NO. 189A/TS/OPS/13

REVISIONS

REV	BY	DATE	DESCRIPTION	PRE'D	CHK'D	APP'D
2	SGH	23-NOV-2015	RE-APPROVED FOR CONSTRUCTION	BS	HSI/AW	JH/AHR
1	SGH	02-NOV-2015	RE-APPROVED FOR CONSTRUCTION	BS	HSI/AW	JH/AHR
0	SGH	21-OCT-2015	APPROVED FOR CONSTRUCTION	BS	HSI/AW	JH/AHR
B	SGH	16-OCT-2015	ISSUED FOR APPROVAL	BS	HSI/AW	JH/AHR
A	SGH	03-OCT-2015	ISSUED FOR REVIEW	WS	HSI/AW	JH/AHR

REF. NO.

ENGINEERING APPROVAL	BY	DATE
PROCESS		
ELECTRICAL		
INSTRUMENT		
STRUCTURAL		25/11/15
MECHANICAL		
PIPING		
PIPELINE		
PROCESS SAFETY		

PHE WMO APP'D — DATE:

CONTRACTOR APP'D — DATE: 24-11-2015

PROJECT TITLE : EPCI-1 : PHE-12, PHE-24, AND CPP2 PLATFORM AND PIPELINE

PERTAMINA PHE WMO

CONSORTIUM

PT. TIMAS SUPLINDO — PT. GUNANUSA UTAMA FABRICATORS

PHE-12 WELLHEAD PLATFORM GUARDIAN SLEEVE ELEVATION-B

SCALE	DOCUMENT No	SHEET		REV.
AS SHOWN	PHEWMO-PHE12-C-SJA-2003	1 OF 1		2

MATERIAL TAKE OFF

MARK	DESCRIPTION	MATERIAL SPEC.	L/A/V (*)	QTY	TOTAL L/A/V (*)	UNIT (U)	UNIT WEIGHT (lb/U)	TOTAL WEIGHT (lb)	SPEC	TYP.
	SUPPLIED BY COMPANY									
1	22"øx0.500" W.T. PIPE	API 5L Gr X52 PSL2	65.073	1	65.073	FT	114.92	7478	1	I
2	18"øx0.500" W.T. PIPE	API 5L Gr X52 PSL2	49.964	1	49.964	FT	93.54	4674	1	I
							SUB TOTAL WEIGHT =	12152 Lb		

SPECIFICATION : 1 = PHEWMO-C-SPE-0101 (REV.0)
(SPEC.) 2 = -

(*) L = LENGTH (ft) ; A = AREA (sq.ft) ; V = VOLUME (lbs/ft)

TYPE CLASSIFICATION : I = TYPE I III = TYPE III
(TYPE) II = TYPE II IV = TYPE IV

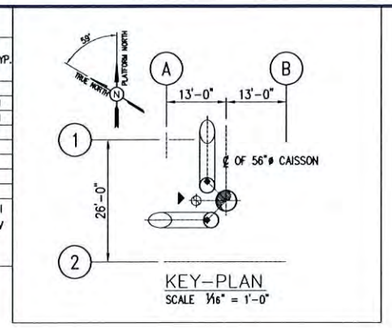

KEY-PLAN
SCALE 1/16" = 1'-0"

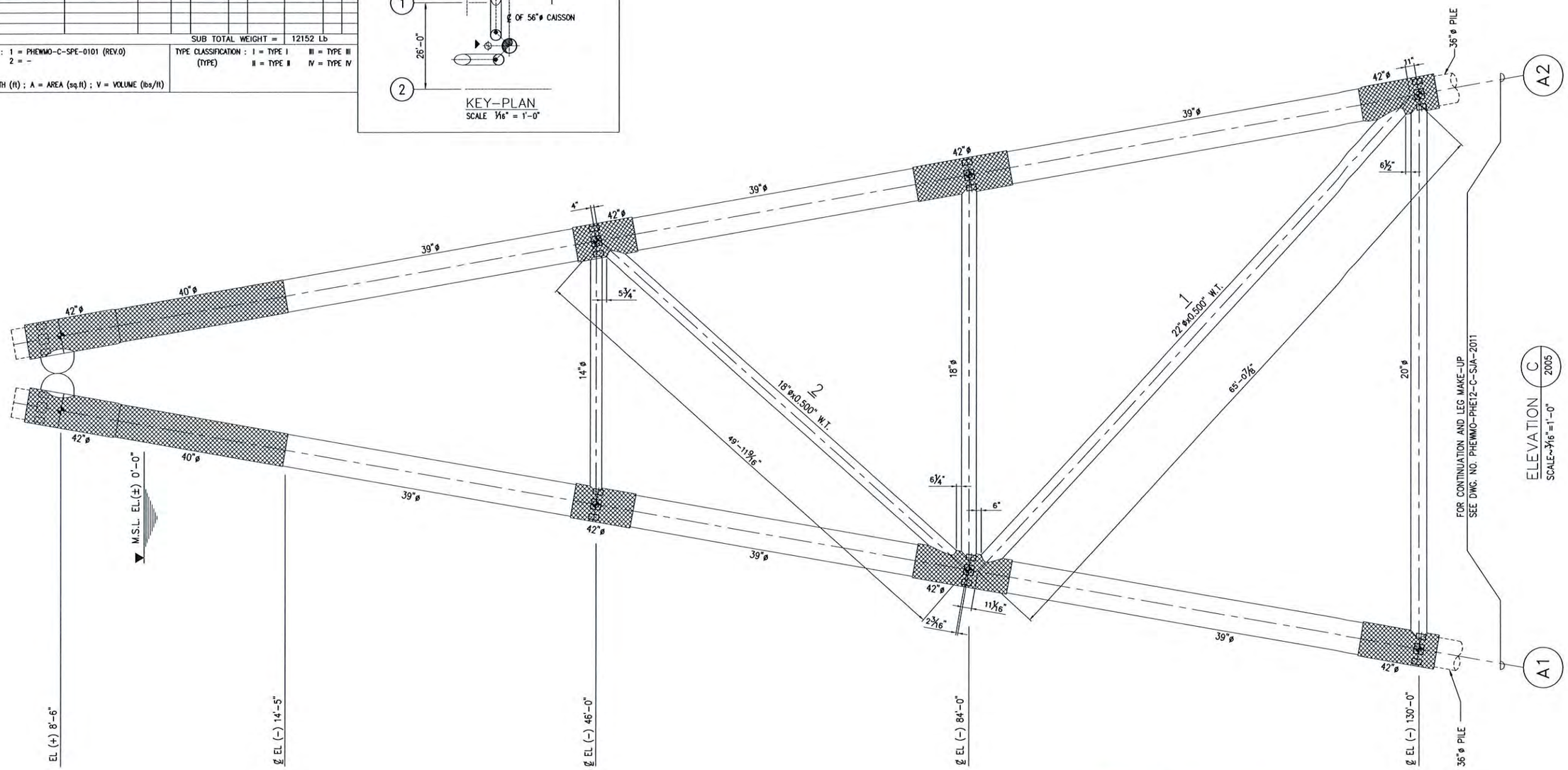

ELEVATION C 2005
SCALE-3/16"=1'-0"

APPROVED FOR CONSTRUCTION

PERTAMINA HULU ENERGI WMO
APPROVED
22 OCT 2015
PROJECT

NOTE

1. FOR GENERAL NOTES REFER TO DWG. NO. PHEWMO-PHE12-C-GEN-2001.
2. ALL STRUCTURAL STEEL MATERIALS IN THIS DWG SHALL BE TYPE 'I' U.N.O.
3. STRUCTURAL STEEL MARKED WITH ▒ SHALL BE MATERIALS TYPE 'II'.

CONTRACT NO. 189A/TS/OPS/13

REVISIONS

REV	BY	DATE	DESCRIPTION	PRE'D	CHK'D	APP'D
0	SGH	21-OCT-2015	APPROVED FOR CONSTRUCTION	BS	HSI/AW	JH/AHR
B	SGH	16-OCT-2015	ISSUED FOR APPROVAL	BS	HSI/AW	JH/AHR
A	SGH	03-OCT-2015	ISSUED FOR REVIEW	WS	HSI/AW	JH/AHR

REF. NO.

ENGINEERING APPROVAL	BY	DATE
PROCESS		
ELECTRICAL		
INSTRUMENT		
STRUCTURAL		
MECHANICAL		
PIPING		
PIPELINE		
PROCESS SAFETY		

PHE WMO APP'D
DATE: 22 OCT 15
CONTRACTOR APP'D
DATE: 22-10-15

PROJECT TITLE : EPCI-1 : PHE-12, PHE-24, AND CPP2 PLATFORM AND PIPELINE

PERTAMINA PHE WMO

CONSORTIUM
PT. TIMAS SUPLINDO PT. GUNANUSA UTAMA FABRICATORS

PHE-12 WELLHEAD PLATFORM
GUARDIAN SLEEVE
ELEVATION-C

SCALE	DOCUMENT No	SHEET	REV.
AS SHOWN	PHEWMO-PHE12-C-SJA-2004	1 OF 1	0

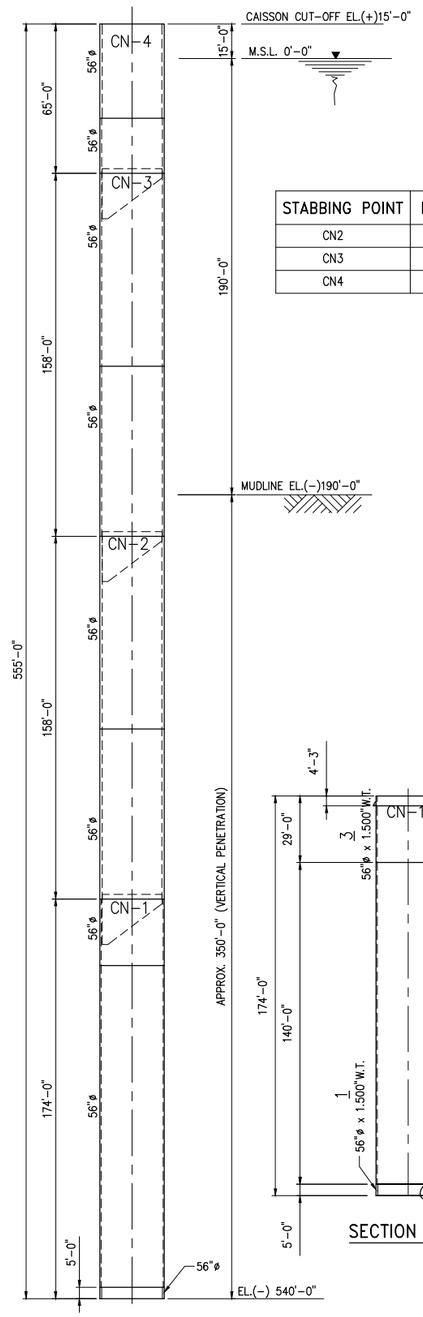

STABBING POINT	LEAST ID
CN2	51.5"
CN3	50.5"
CN4	51.5"

CAISSON ASSEMBLY ELEVATION

VERTICAL SCALE ~ 1/32" = 1'-0"
HORIZONTAL SCALE ~ 3/16" = 1'-0"

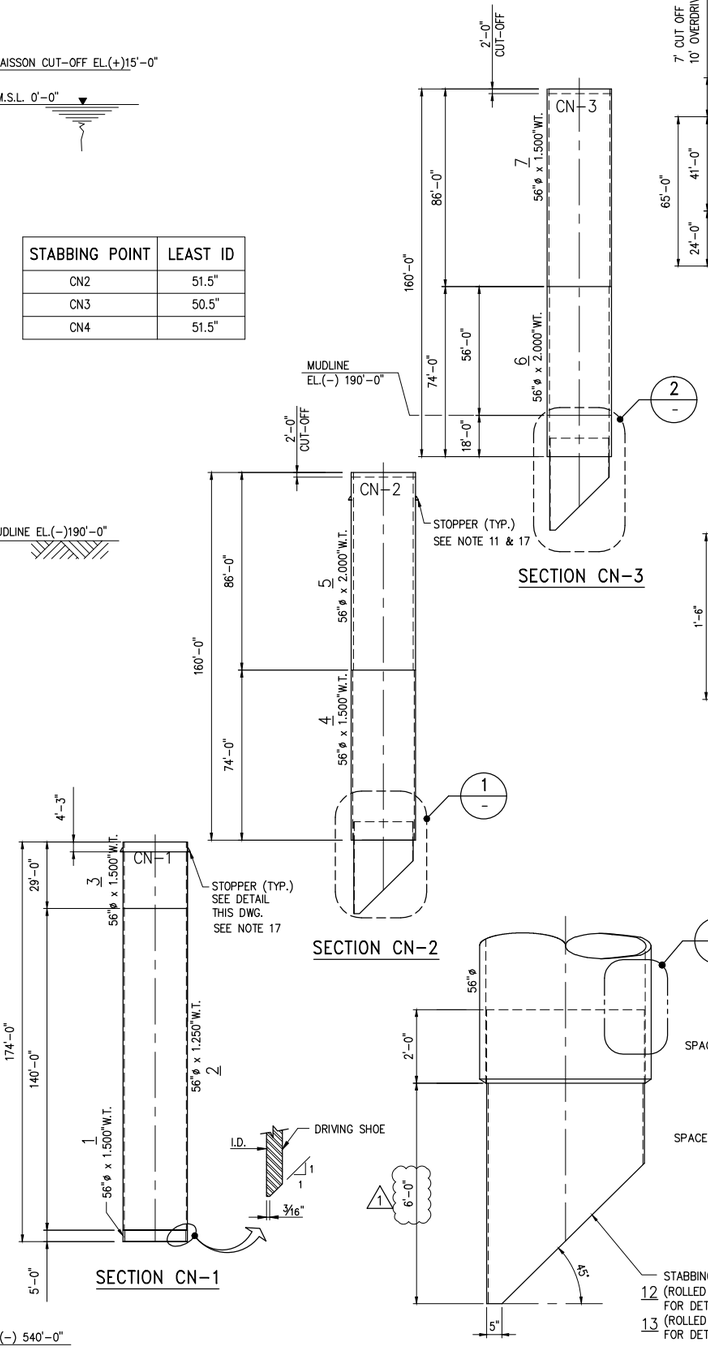

SECTION CN-3

SECTION CN-2

SECTION CN-1

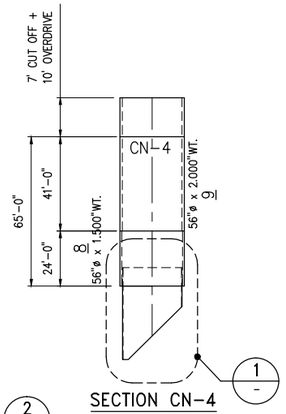

SECTION CN-4

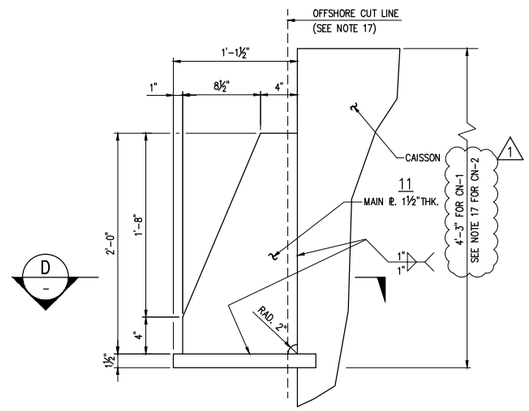

STOPPER DETAIL

SCALE ~ 1½" = 1'-0"
(4 NOS. REQ'D.)
SEE NOTE 13
SEE NOTE 17

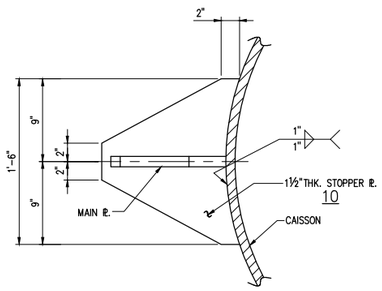

SECTION

SCALE ~ 1½" = 1'-0"

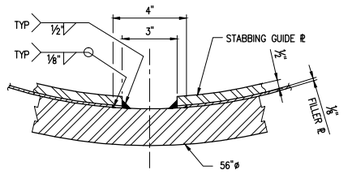

SECTION

SCALE ~ 3"=1'-0"

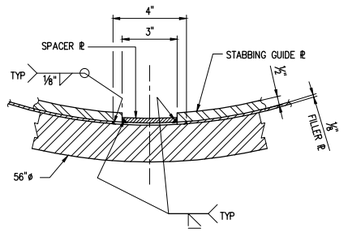

SECTION

SCALE ~ 3"=1'-0"

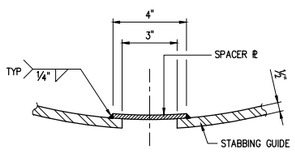

SECTION

SCALE ~ 3"=1'-0"

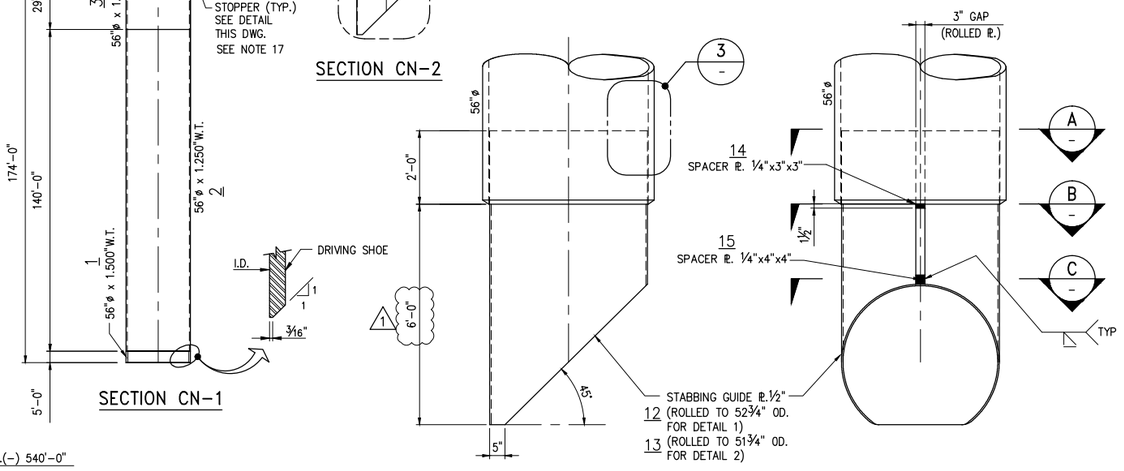

DETAIL

SCALE ~ ½" = 1'-0"

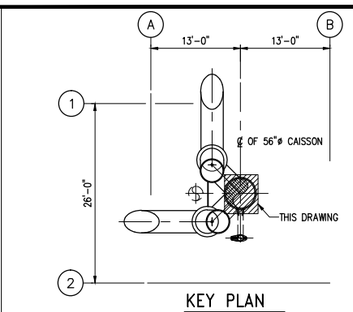

KEY PLAN

SCALE ~ 3/32"=1'-0"

MATERIAL TAKE OFF

MARK	DESCRIPTION	MATERIAL SPEC.	L/A/V (*)	QTY	TOTAL L/A/V (*)	UNIT (U)	UNIT WEIGHT (lb/U)	TOTAL WEIGHT (lb)	SPEC.	TYPE
	SUPPLIED BY COMPANY									
1	56"ø x1.500" W.T. PIPE	API 5L X52 PSL2	5.00	1	5.00	FT	873.92	4370	1	I
2	56"ø x1.250" W.T. PIPE	API 2H GR.50	140.00	1	140.00	FT	731.61	102425	1	I
3	56"ø x1.500" W.T. PIPE	API 5L X52 PSL2	29.00	1	29.00	FT	873.92	25344	1	I
4	56"ø x1.500" W.T. PIPE	API 5L X52 PSL2	74.00	1	74.00	FT	873.92	64670	1	I
5	56"ø x2.000" W.T. PIPE	API 5L X52 PSL2	86.00	1	86.00	FT	1154.54	99290	1	I
6	56"ø x2.000" W.T. PIPE	API 5L X52 PSL2	74.00	1	74.00	FT	1154.54	85436	1	I
7	56"ø x1.500" W.T. PIPE	API 5L X52 PSL2	86.00	1	86.00	FT	873.92	75157	1	I
8	56"ø x1.500" W.T. PIPE	API 5L X52 PSL2	24.00	1	24.00	FT	873.92	20974	1	I
9	56"ø x2.000" W.T. PIPE	API 5L X52 PSL2	58.00	1	58.00	FT	1154.54	66963	1	I
10	1½" THK. PLATE	ASTM A572 Gr.50	1.69	4	6.76	FT²	61.25	414	1	I
11	1½" THK. PLATE	ASTM A572 Gr.50	1.56	4	6.24	FT²	61.25	382	1	I
	SUPPLIED BY CONTRACTOR									
12	½" THK. PLATE	ASTM A572 Gr.50	110.50	2	221.00	FT²	20.42	4513	1	I
13	½" THK. PLATE	ASTM A572 Gr.50	108.38	1	108.38	FT²	20.42	2213	1	I
14	¼" THK. PLATE	ASTM A36	0.11	3	0.33	FT²	10.21	3	1	III
15	¼" THK. PLATE	ASTM A36	0.06	3	0.18	FT²	10.21	2	1	III
16	⅛" THK. PLATE	ASTM A36	27.69	3	83.07	FT²	5.10	424	1	III
17	⅛" THK. PLATE	ASTM A36	27.17	3	81.51	FT²	5.10	416	1	III
							SUB TOTAL WEIGHT =	552996 Lb		

SPECIFICATION : 1 = PHEWMO-C-SPE-0101 (REV.0)
(SPEC.) 2 = -

TYPE CLASSIFICATION : I = TYPE I III = TYPE III
(TYPE) II = TYPE II IV = TYPE IV

(*) L = LENGTH (ft) ; A = AREA (sq.ft) ; V = VOLUME (lbs/ft)

NOTE :

9. LONGITUDINAL SEAM WELDS SHALL BE MARKED 15'.0 AT THE TOP AND 10'.0 AT THE BOTTOM OF EACH CAISSON MAKE-UP PIECE.
10. OVER LENGTH SHALL BE SQUARE CUT BY CONTRACTOR.
11. STOPPER IS SHIPPED LOOSE AND INSTALLED OFFSHORE, THE LOCATION OF STOPPER TO BE DETERMINED AT OFFSHORE.
12. MHU-270T HAMMER TYPE IS USED WITH 99.87 KIPS OF SELF WEIGHT 10'-0" OVER DRIVE AND UNDER DRIVE AND 7'-0" CUT OFF ARE COVERED
13. TOP OF CN1 TO BE SHOP BEVEL 15DEG AS PER DETAIL-3. TOP OF CN2, CN3 AND CN4 TO BE SQUARE CUT FOR HAMMER DRIVING.
14. X-RAY IN YARD AND SAVE FILM TO BE SENDT OFFSHORE AS REFERENCE FOR ULTRASONIC TESTING OF OFFSHORE SPILCE WELD.
15. DRIVING HEAD SHALL BE PAINTED WHITE AND LATTERED "MUST BE CUT-OFF"
16. PILE SECTIONS CN2, CN3, CN4 SHALL HAVE LUMINOUS WHITE PAINT MARK 150mm WIDE AND 3000mm LONG FOR LONGITUDINAL WELD SEAM AT THE TOP AND BOTTOM OF SECTIONS.
17. PILE STOPPER TO BE REMOVED OFFSHORE

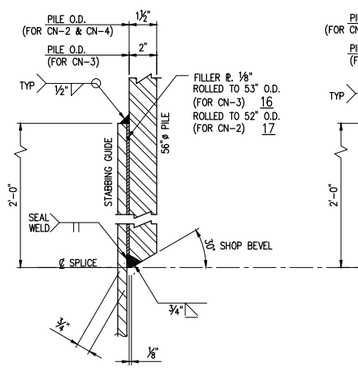

BEFORE SPLICE

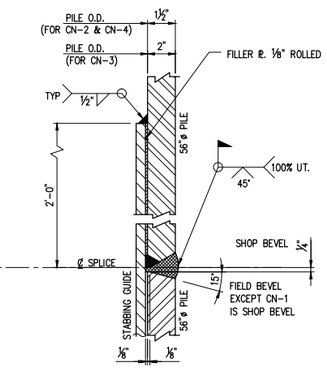

AFTER SPLICE

DETAIL

SCALE ~ 3" = 1'-0"

NOTE

1. FOR GENERAL NOTES REFER. TO DWG. NO. PHEWMO-PHE12-C-GEN-2001.
2. CAISSON SECTIONS ARE TO BE COATED IN ACCORDANCE WITH SPECIFICATION FOR PROTECTIVE COATING GS PHEWMO-H-PRC-0007.
3. CAISSON MAKE UP SHALL BE CONFIRMED BY OFFSHORE INSTALLATION CONTRACTOR.
4. LONGITUDINAL WELD SEAMS AT SPLICES SHALL BE MINIMUM BY 90 DEGREE.
5. FOR TYPICAL WELD DETAILS REFER TO DWG. PHEWMO-PHE12-C-GEN-2005
6. ALL STRUCTURAL STEEL MATERIAL IN THIS DWG SHALL BE TYPE "I" U.N.O.
7. INTERNAL LONGITUDINAL WELD SEAM IN THE TOP 10 FT. OF EACH MAKE-UP TO BE GROUND FLUSH.
8. EXTERNAL LONGITUDINAL WELD SEAM OF CN-4 TO BE GROUND SMOOTH FOR CAISSON SLEEVE INSTALLATION.

CONTRACT NO. 189A/TS/OPS/13

REVISIONS

REV	BY	DATE	DESCRIPTION	PRE'D	CHK'D	APP'D
1	SGH	21-JAN-2016	RE-APPROVED FOR CONSTRUCTION	BS	HSI/AW	JH/AHR
0	SPR	22-DEC-2015	APPROVED FOR CONSTRUCTION	BS	HSI/AW	JH/AHR
B	SGH	02-DEC-2015	ISSUED FOR APPROVAL	BS	HSI/AW	JH/AHR
A	BK	22-OCT-2015	ISSUED FOR REVIEW	BS	HSI/AW	JH/AHR

REF. NO.

ENGINEERING APPROVAL	BY	DATE
PROCESS		
ELECTRICAL		
INSTRUMENT		
STRUCTURAL		
MECHANICAL		
PIPING		
PIPELINE		
PROCESS SAFETY		

PHE WMO APP"D

DATE:

CONTRACTOR APP'D

DATE:

PROJECT TITLE : EPCI-1 : PHE-12, PHE-24, AND CPP2 PLATFORM AND PIPELINE

PERTAMINA PHE WMO

CONSORTIUM

PT. TIMAS SUPLINDO PT. GUNANUSA UTAMA FABRICATORS

PHE-12 WELL PLATFORM
CAISSON MAKE-UP AND DETAILS

SCALE	DOCUMENT No	SHEET		REV.
AS SHOWN	PHEWMO-PHE12-C-SJA-2010	1 OF 1		1

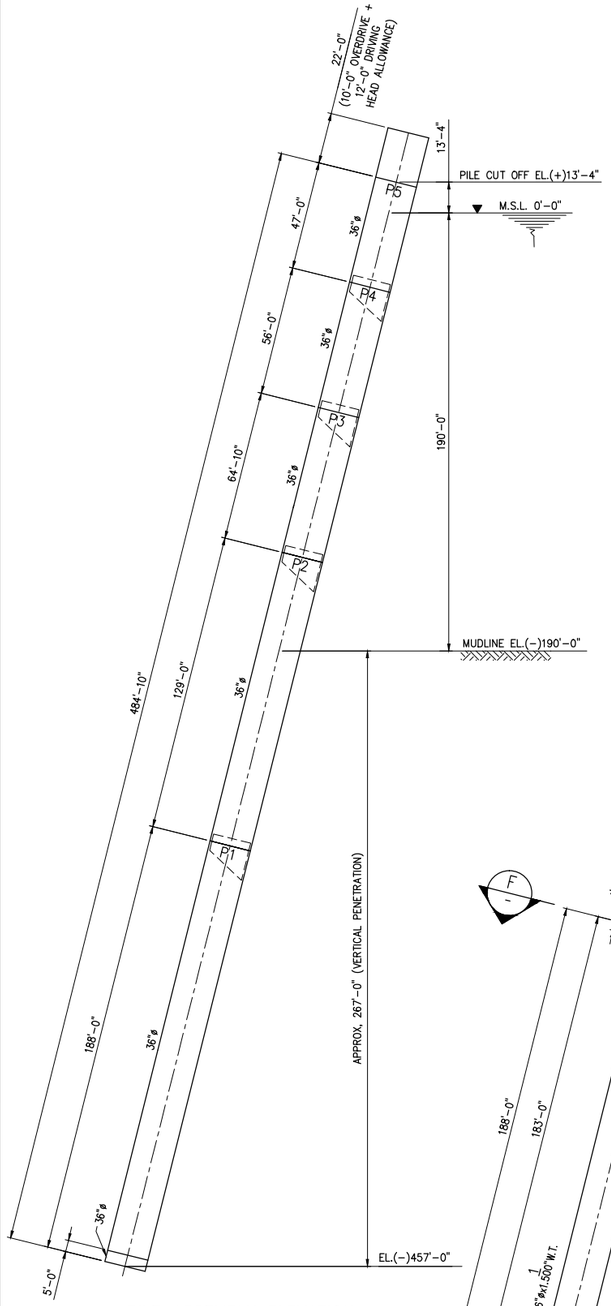

PILE ASSEMBLY ELEVATION

VERTICAL SCALE ~ 1/32" = 1'-0"
HORIZONTAL SCALE ~ 3/16" = 1'-0"

(2 N.O.S. REQUIRED)

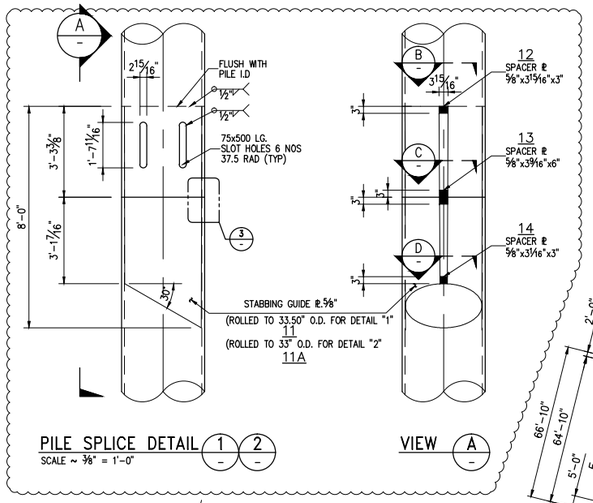

PILE SPLICE DETAIL 1 2
SCALE ~ 3/8" = 1'-0"

VIEW A

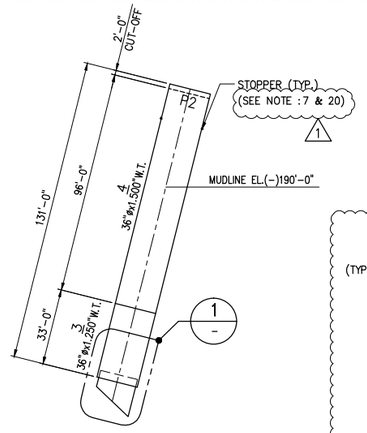

SECTION P2

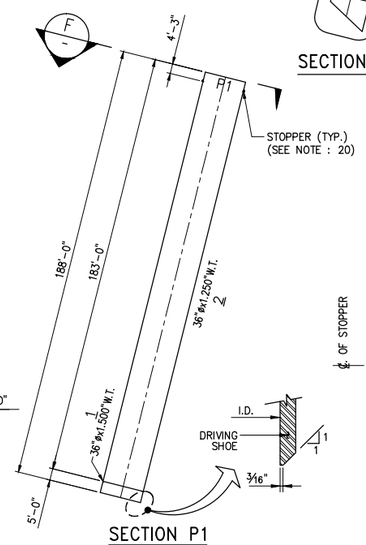

SECTION P1

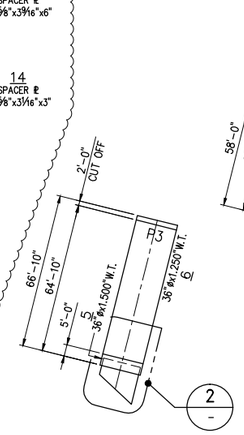

SECTION P3

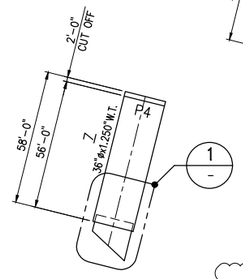

SECTION P4

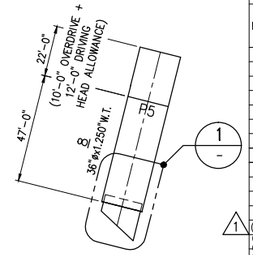

SECTION P5

MATERIAL TAKE OFF

MARK	DESCRIPTION	MATERIAL SPEC.	L/A/V (*)	QTY	TOTAL L/A/V (*)	UNIT (U)	UNIT WEIGHT (lb/U)	TOTAL WEIGHT (lb)	SPEC.	TYPE
	SUPPLIED BY COMPANY									
1	36"ø x1.500" W.T. PIPE	API 5L X52 PSL2	5.00	2	10.00	FT	553.21	5532	1	I
2	36"ø x1.250" W.T. PIPE	API 5L X52 PSL2	183.00	2	366.00	FT	464.35	169952	1	I
3	36"ø x1.250" W.T. PIPE	API 5L X52 PSL2	33.00	2	66.00	FT	464.35	30647	1	I
4	36"ø x1.500" W.T. PIPE	API 5L X52 PSL2	98.00	2	196.00	FT	553.21	108429	1	I
5	36"ø x1.500" W.T. PIPE	API 5L X52 PSL2	5.00	2	10.00	FT	553.21	5532	1	I
6	36"ø x1.250" W.T. PIPE	API 5L X52 PSL2	61.83	2	123.66	FT	464.35	57422	1	I
7	36"ø x1.250" W.T. PIPE	API 5L X52 PSL2	58.00	2	116.00	FT	464.35	53865	1	I
8	36"ø x1.250" W.T. PIPE	API 5L X52 PSL2	69.00	2	138.00	FT	464.35	64080	1	I
9	1¼" THK. PLATE	ASTM A572 Gr.50	0.61	8	4.88	FT²	51.04	249	1	I
10	1¼" THK. PLATE	ASTM A572 Gr.50	0.38	8	3.04	FT²	51.04	155	1	I
	SUPPLIED BY CONTRACTOR									
11	5/8" THK. PLATE	ASTM A572 Gr.50	70.17	6	421.02	FT²	25.52	10744	1	I
11A	5/8" THK. PLATE	ASTM A572 Gr.50	69.12	2	138.24	FT²	25.52	3528	1	I
12	5/8" THK. PLATE	ASTM A36	0.08	8	0.64	FT²	25.52	16	1	III
13	5/8" THK. PLATE	ASTM A36	0.15	8	1.20	FT²	25.52	31	1	III
14	5/8" THK. PLATE	ASTM A36	0.06	8	0.48	FT²	25.52	12	1	III
					SUB TOTAL WEIGHT =			510194 Lb		

SPECIFICATION (SPEC.): 1 = PHEWMO-C-SPE-0101 (REV.0); 2 = –

TYPE CLASSIFICATION (TYPE): I = TYPE I, II = TYPE II, III = TYPE III, IV = TYPE IV

(*) L = LENGTH (ft) ; A = AREA (sq.ft) ; V = VOLUME (lbs/ft)

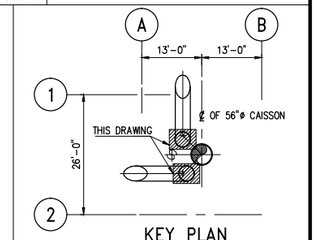

KEY PLAN
SCALE ~ 1/16" = 1'-0"

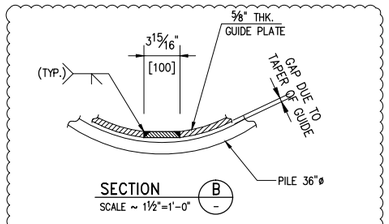

SECTION B
SCALE ~ 1½"=1'-0"

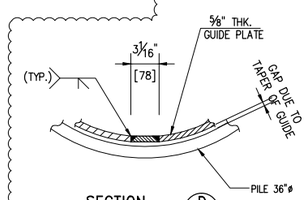

SECTION D
SCALE ~ 1½"=1'-0"

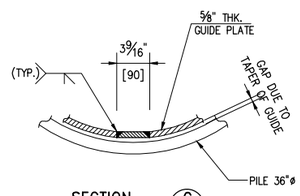

SECTION C
SCALE ~ 1½"=1'-0"

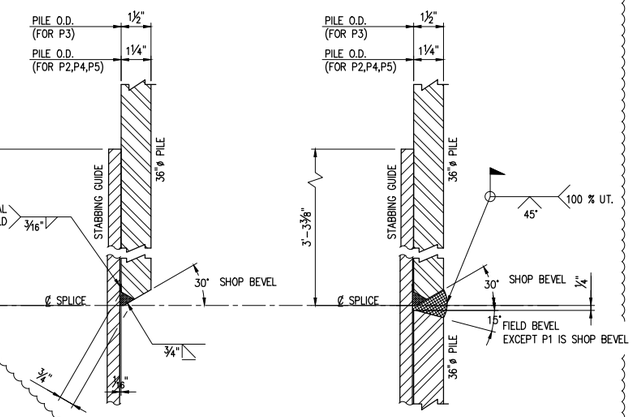

BEFORE SPLICE

AFTER SPLICE

DETAIL 3
SCALE ~ 3" = 1'-0"

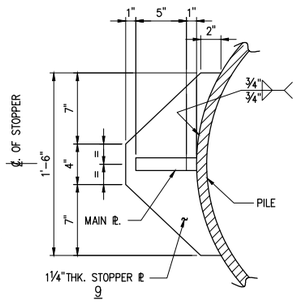

SECTION E
SCALE ~ 1½" = 1'-0"

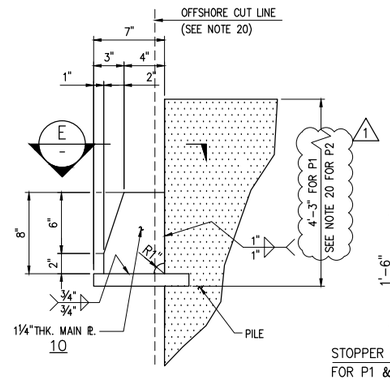

PILE STOPPER PLATE DETAIL
SCALE ~ 1½" = 1'-0"
(REQ'D.= 8 QTY)
SEE NOTE 18

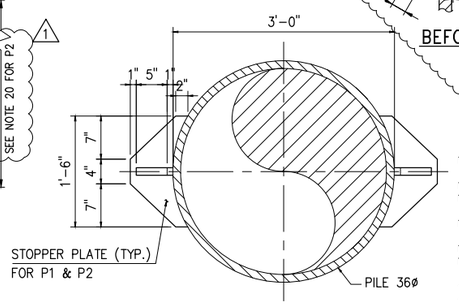

SECTION F
SCALE ~ 1" = 1'-0"

10. EXTERNAL LONGITUDINAL WELD SEAM & GIRTH WELD IN THE TOP 12 FT OF P5 SECTION TO BE GROUND SMOOTH FOR SEGMENT INSTALLATION.
11. LONGITUDINAL SEAM WELD SHALL BE MARKED 7 FT AT THE TOP AND BOTTOM OF EACH MAKE-UP PIECE.
12. TOP OF P1 TO BE SHOP BEVEL 15 DEG. AS PER DETAIL-3 OF P2, P3, P4, P5 TO BE SQUARE CUT OF HAMMER DRIVING
13. X-RAY IN YARD AND SAVE FILM TO BE SENT OFFSHORE AS REFERENCE FOR ULTRASONIC TESTING OF OFFSHORE SPLICE WELD.
14. DRIVING HEAD SHALL BE PAINTED WHITE AND LETTERED "MUST BE CUT-OFF"
15. PILE SECTIONS P2 TO P5 SHALL HAVE LUMINOUS WHITE PAINT MARK 150mm AND 3000mm LONG FOR LONGITUDINAL WELD SEAM AT THE TOP AND BOTTOM OF SECTIONS.
16. 12'-0" FOR DRIVING ALLOWANCE HEAD AND 10'-0" TO ACCOMODATE OVER DRIVE CONDITION.
17. PILE MAKE-UP DIMENSIONS ARE BASED ON MARK-UP DRAWINGS PROVIDED BY TIMAS.
18. INSTALLATION CONTRACTOR TO FINALIZED DETAIL DESIGN OF STOPPER AND PIN HOLE
19. MHU-1000C HAMMER TYPE IS USED WITH 36.8 KIPS OF WEIGHT.
20. PILE STOPPER TO BE REMOVED OFFSHORE.

NOTE

1. FOR GENERAL NOTES REFER. TO DWG. NO. PHEWMO-PHE12-GEN-2001.
2. PILE SECTIONS ARE TO BE COATED IN ACCORDANCE WITH SPECIFICATIONS FOR PROTECTIVE COATINGS GS PHEWMO-H-PRC-0007.
3. PILE MAKE-UP SHALL BE CONFIRMED BY OFFSHORE INSTALLATION CONTRACTOR.
4. LONGITUDINAL WELD SEAMS AT SPLICES SHALL BE MINIMUM BY 90 DEGREES.
5. FOR TYPICAL WELD DETAILS REFER TO DWG. NO. PHEWMO-PHE12-C-GEN-2005
6. ALL STRUCTURAL STEEL MATERIAL IN THIS DWG SHALL BE TYPE "I" U.N.O.
7. STOPPER IS SHIPPED LOOSE AND INSTALLED OFFSHORE, THE LOCATION OF STOPPER TO BE DETERMINED AT OFFSHORE.
8. OFFSHORE INSTALLATION CONTRACTOR TO CONFIRM STABBING GUIDE & STOPPER DESIGN AND PIN HOLE DETAIL.
9. INTERNAL LONGITUDINAL WELD SEAM & GIRTH WELD IN THE TOP 7 FT OF EACH MAKE-UP TO BE GROUND FLUSH.

CONTRACT NO. 189A/TS/OPS/13

REVISIONS

REV	BY	DATE	DESCRIPTION	PRE'D	CHK'D	APP'D
1	SGH	21-JAN-2016	RE-APPROVED FOR CONSTRUCTION	BS	HSI/AW	JH/AHR
0	SGH	10-DEC-2015	APPROVED FOR CONSTRUCTION	BS	HSI/AW	JH/AHR
B	SGH	20-NOV-2015	ISSUED FOR APPROVAL	BS	HSI/AW	JH/AHR
A	BK	22-OCT-2015	ISSUED FOR REVIEW	BS	HSI/AW	JH/AHR

REF. NO.

ENGINEERING APPROVAL	BY	DATE
PROCESS		
ELECTRICAL		
INSTRUMENT		
STRUCTURAL		
MECHANICAL		
PIPING		
PIPELINE		
PROCESS SAFETY		

PHE WMO APP'D

DATE:

CONTRACTOR APP'D

DATE:

PROJECT TITLE : EPCI-1 : PHE-12, PHE-24, AND CPP2 PLATFORM AND PIPELINE

PERTAMINA PHE WMO

CONSORTIUM

PT. TIMAS SUPLINDO — PT. GUNANUSA UTAMA FABRICATORS

PHE-12 WELL PLATFORM
BATTERED PILE MAKE-UP
AND DETAILS

SCALE	DOCUMENT No	SHEET			REV.
AS SHOWN	PHEWMO-PHE12-C-SJA-2011	1	OF	1	1

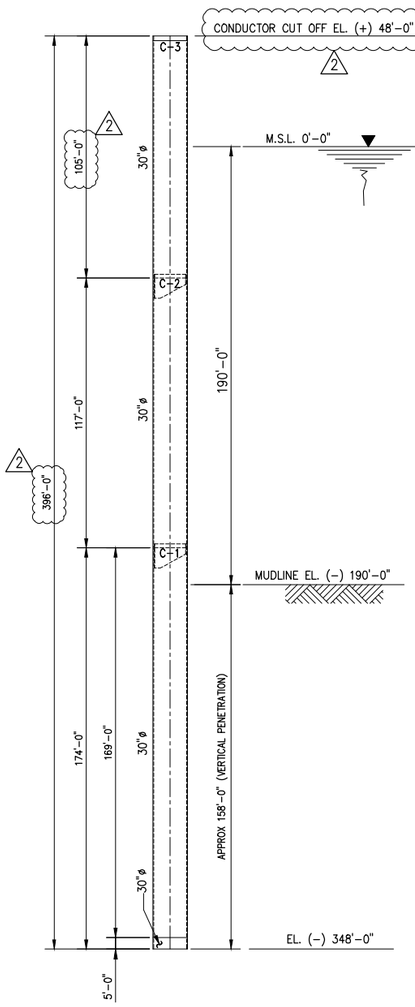

CONDUCTOR ASSEMBLY ELEVATION

CONDUCTOR MAKE UP
VERTICAL SCALE 1/32" = 1'-0"
HORIZONTAL SCALE 3/16" = 1'-0"
(1 NOS REQUIRED)

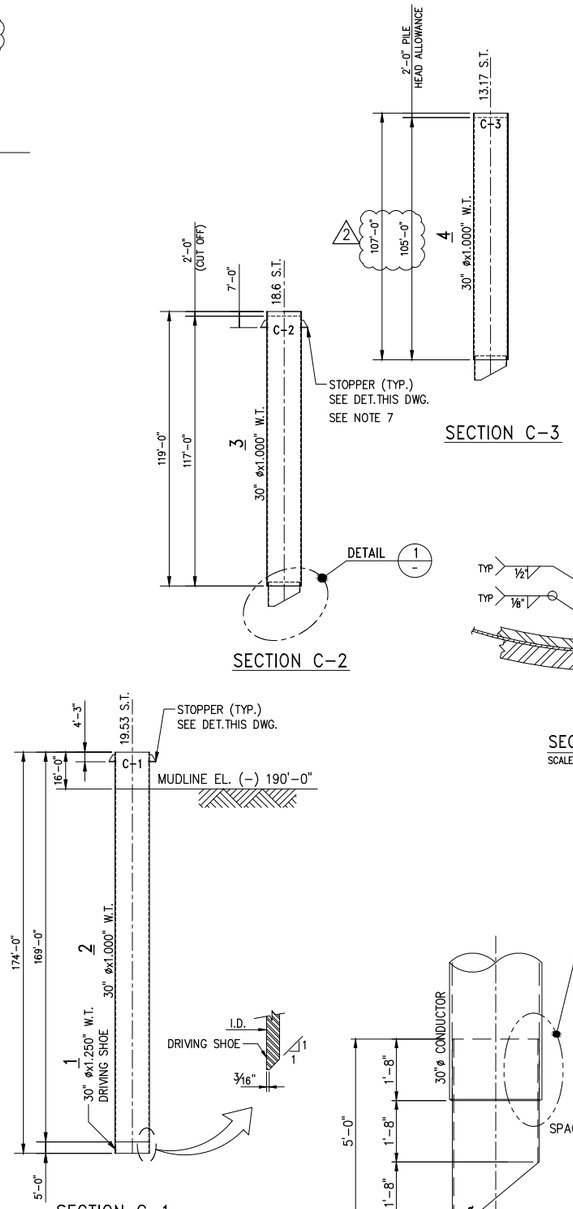

SECTION C-3

SECTION C-2

SECTION C-1

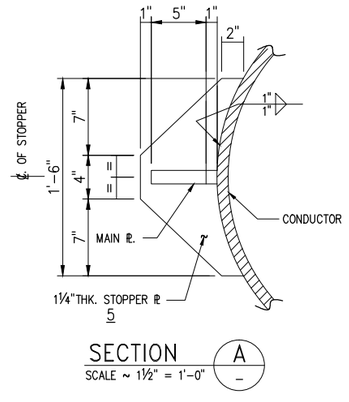

SECTION A
SCALE ~ 1½" = 1'-0"

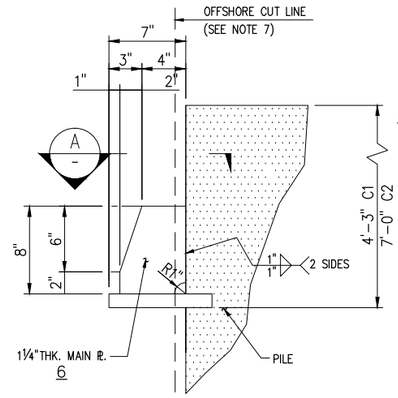

STOPPER DETAIL
SCALE ~ 1½" = 1'-0"
(REQ'D.= 4 QTY)
SEE NOTE 18

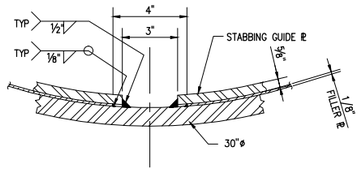

SECTION B
SCALE ~ 3"=1'-0"

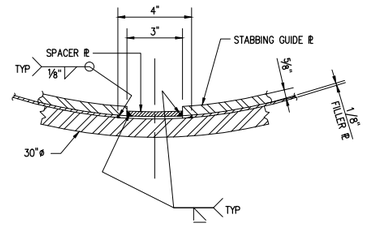

SECTION C
SCALE ~ 3"=1'-0"

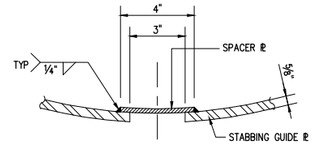

SECTION D
SCALE ~ 3"=1'-0"

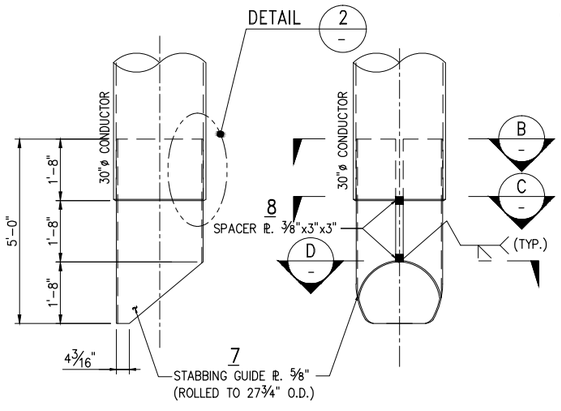

DETAIL 1
SCALE - ½" = 1'-0"
SEE NOTE 10

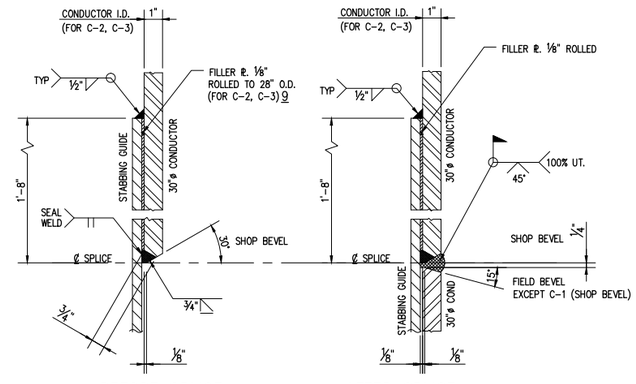

DETAIL 2
SCALE ~ 3" = 1'-0"

8. ITEM NO. 7 ~ 9 ARE CONTRACTOR SUPPLY MATERIAL.
9. IHC-S90 HAMMER TYPE IS USED FOR DRIVING THE CONDUCTOR. 2
10. OFFSHORE INSTALLATION CONTRACTOR TO CONFIRM STABING GUIDE & STOPPER DESIGN
11. INTERNAL LONGITUDINAL WELD SEAM & GIRTH WELD IN THE TOP 7' OF EACH MAKE-UP AND PIN HOLE DETAIL TO BE GROUND FLUSH.
12. EXTERNAL LONGITUDINAL WELD SEAM IN THE TOP 12' OF C3 SECTION TO BE GROUND SMOOTH FOR SEGMENT INSTALLATION.
13. LONGITUDINAL SEAM WELD SHALL BE MARKED 7' AT THE TOP AND BOTTOM OF EACH MAKE-UP PIECE.
14. TOP OF C1 TO BE SHOP BEVEL 15' AS PER DETAIL-2. TOP OF C2, C3 TO BE SQUARE CUT OF HAMMER DRIVING.
15. X-RAY IN YARD AND SAVE FILM TO BE SENT OFFSHORE AS REFERENCE FOR ULTRASONIC TESTING OF OF OFFSHORE SPILCE WELD.
16. DRIVING HEAD SHALL BE PAINTED WHITE AND LETTERED "MUST BE CUT-OFF"
17. PILE SECTIONS C2 TO C3 SHALL HAVE LUMINOUS WHITE PAINT MARK 150mm WIDE AND 3000mm LONG FOR LONGITUDINAL WELD SEAM AT THE TOP AND BOTTOM OF SECTIONS.
18. STOPPER & LIFTING SHACKLE PIN HOLE DETAILS TO BE ON HOLD

MATERIAL TAKE OFF

MARK	DESCRIPTION	MATERIAL SPEC.	L/A/V (*)	QTY	TOTAL L/A/V (*)	UNIT (U)	UNIT WEIGHT (lb/U)	TOTAL WEIGHT (lb)	SPEC.	TYPE
	SUPPLIED BY COMPANY									
1	30"øx1.250" WT. PIPE	API 5L X52 PSL2	5.00	1	5.00	FT	384.17	1921	1	I
2	30"øx1.000" WT. PIPE	API 5L X52 PSL2	169.00	1	169.00	FT	310.01	52392	1	I
3	30"øx1.000" WT. PIPE	API 5L X52 PSL2	119.00	1	119.00	FT	310.01	36891	1	I
4	30"øx1.000" WT. PIPE	API 5L X52 PSL2	107.00	1	107.00	FT	310.01	33171	1	I
5	1¼" THK. PLATE	ASTM A572 Gr.50	0.61	4	2.44	FT²	51.04	125	1	I
6	1¼" THK. PLATE	ASTM A572 Gr.50	0.38	4	1.52	FT²	51.04	78	1	I
	SUPPLIED BY CONTRACTOR									
7	⅝" THK. PLATE	ASTM A572	42.36	2	84.72	FT²	25.52	2162	1	I
8	⅜" THK. PLATE	ASTM A36	0.063	4	0.252	FT²	15.31	4	1	III
9	⅛" THK. PLATE	ASTM A36	23.60	2	47.2	FT²	5.10	241	1	III
							SUB TOTAL WEIGHT =	126985 Lb 2		

SPECIFICATION (SPEC.): 1 = PHEWMO-C-SPE-0101 (REV.0); 2 = -

TYPE CLASSIFICATION (TYPE): I = TYPE I, III = TYPE III, II = TYPE II, IV = TYPE IV

(*) L = LENGTH (ft) ; A = AREA (sq.ft) ; V = VOLUME (lbs/ft)

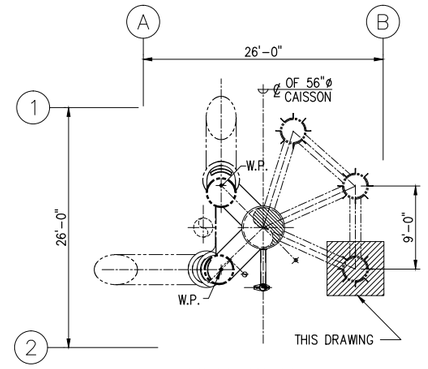

KEY-PLAN
SCALE ~ N.T.S

NOTE

1. FOR GENERAL NOTES REFER. TO DWG. NO. PHEWMO-PHE12-C-GEN-2001
2. CONDUCTOR SECTIONS ARE TO BE COATED IN ACCORDANCE WITH SPECIFICATION FOR PROTECTIVE COATING GS PHEWMO-H-PRC-0007.
3. CONDUCTOR MAKE UP SHALL BE CONFIRMED BY OFFSHORE INSTALLATION CONTRACTOR
4. LONGITUDINAL WELD SEAMS AT SPLICES SHALL BE MINIMUM BY 90 DEGREE.
5. DRILLING TO CONFIRM THE REQUIRED CONDUCTOR PENETRATION.
6. ALL STRUCTURAL STEEL MATERIAL IN THIS DWG SHALL BE TYPE "I" U.N.O.
7. CONDUCTOR STOPPER TO BE REMOVE OFFSHORE

CONTRACT NO. 189A/TS/OPS/13

REVISIONS

REV	BY	DATE	DESCRIPTION	PRE'D	CHK'D	APP'D
2	JS	25-JAN-2016	RE-APPROVED FOR CONSTRUCTION	BS	HSI/AW	JH/AHR
1	SPR	19-JAN-2016	RE-APPROVED FOR CONSTRUCTION	BS	HSI/AW	JH/AHR
0	SPR	22-DEC-2015	APPROVED FOR CONSTRUCTION	BS	HSI/AW	JH/AHR
B	SGH	20-NOV-2015	ISSUED FOR APPROVAL	BS	HSI/AW	JH/AHR
A	BK	22-OCT-2015	ISSUED FOR REVIEW	BS	HSI/AW	JH/AHR

REF. NO.

ENGINEERING APPROVAL	BY	DATE
PROCESS		
ELECTRICAL		
INSTRUMENT		
STRUCTURAL		
MECHANICAL		
PIPING		
PIPELINE		
PROCESS SAFETY		

PHE WMO APP"D
DATE:
CONTRACTOR APP'D
DATE:

PROJECT TITLE : EPCI-1 : PHE-12, PHE-24, AND CPP2 PLATFORM AND PIPELINE

PERTAMINA PHE WMO

CONSORTIUM
PT. TIMAS SUPLINDO
PT. GUNANUSA UTAMA FABRICATORS

PHE-12 WELL PLATFORM
CONDUCTOR MAKE-UP AND DETAILS

SCALE	DOCUMENT No	SHEET			REV.
AS SHOWN	PHEWMO-PHE12-C-SJA-2012	1	OF	1	2

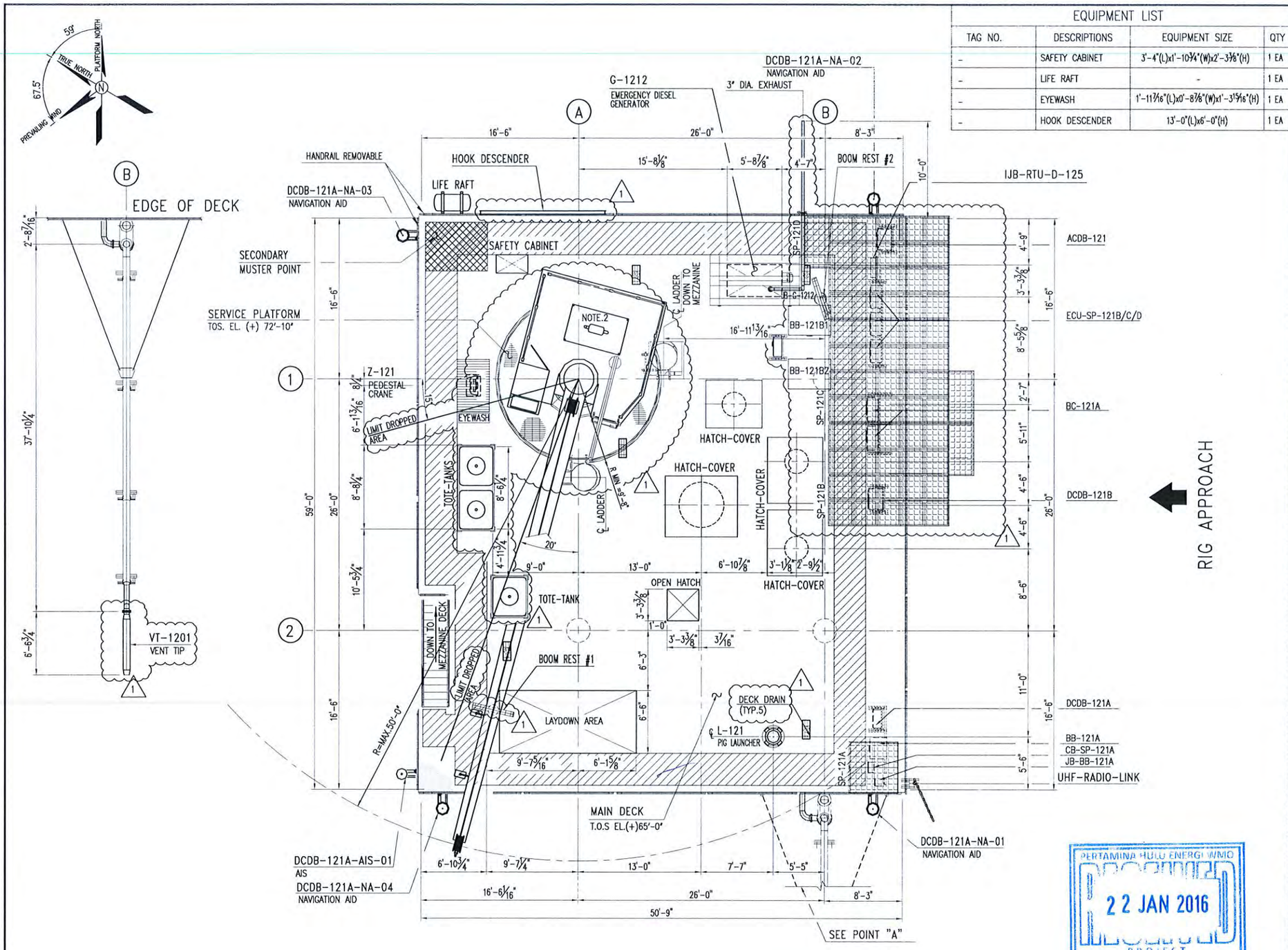

EQUIPMENT LIST

TAG NO.	DESCRIPTIONS	EQUIPMENT SIZE	QTY
-	SAFETY CABINET	3'-4"(L)x1'-10¾"(W)x2'-3⅜"(H)	1 EA
-	LIFE RAFT	-	1 EA
-	EYEWASH	1'-11⅞16"(L)x0'-8⅞"(W)x1'-3159/16"(H)	1 EA
-	HOOK DESCENDER	13'-0"(L)x6'-0"(H)	1 EA

KEY – ELEVATION

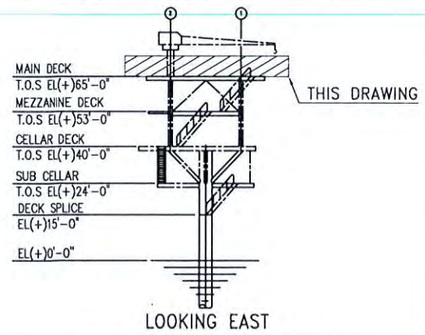

LEGEND

GRATING | PLATE | ESCAPE ROUTE

EQUIPMENT LIST

TAG NO.	DESCRIPTIONS	EQUIPMENT SIZE	QTY
ACDB-121	AC DISTRIBUTION BOARD	3'-1.8"(H)x2'-2"(W)x1'-6.3"(D)	1 EA
BB-121A	NAV BATTERY BANK	2'-0"(L) x 1'-9"(W) x 2'-6"(H)	1 EA
BB-121B1	BATTERY BANK	2'-0"(H) x 3'-4"(W) x 4'-8"(D)	1 EA
BB-121B2	BATTERY BANK	2'-0"(H) x 3'-4"(W) x 4'-8"(D)	1 EA
BC-121A	BATTERY CHARGER	5'-11"(H)x6'-3"(W)x1'-2.4"(D)	1 EA
CB-SP-121B/C/D	JUNCTION BOX	1'-5.8"(H) x 1'-3"(W) x 0'-8"(D)	3 EA
CB-SP-121A	SOLAR PANEL JUNCTION BOX (FOR NAVIGATION AID)	1'-1"(H) x 1'-1"(W) x 0'-8"(D)	1 EA
DCDB-121A-AIS-01	AIS	-	1 SET
DCDB-121A-NA-01/02 03/04	NAVIGATION AID	-	4 SET
DCDB-121A	NAV. AID CONTROL PANEL	2'-4.4"(H)x1'-11"(W)x0'-11"(D)	1 EA
DCDB-121B	24V DC-DISTRIBUTION BOARD	3'-1.8"(H)x2'-2"(W)x1'-6.3"(D)	1 EA
ECU-SP-121B/C/D	ELECTRICAL CONTROL UNIT	5'-11"(H)x9'-8.7"(W)x1'-2.2"(D)	3 EA
G-1212	EMERGENCY DIESEL GENERATOR (1)	5'-8⅞"(L)x4'-¾"(W)x4'-11"(H)	1 EA
IJB-RTU-D-125	JUNCTION BOX	1'-8"(L) x 0'-8"(W) x 2'-0"(H)	1 EA
JB-BB-121A	BATTERY ISOLATION SWITCH	1'-3"(H)x1'-1"(W)x0'-9"(D)	1 EA
JB-BB-121B	BATTERY TERMINAL BOX	2'-4.4"(H)x1'-11"(W)x0'-11"(D)	1 EA
L-121	PIG LAUNCHER	10 ¾"(ID) x 12'-11"(L) 8 ¾"(ID) x 3'-6"(L)	1 EA
SP-121A	SOLAR PANEL (FOR NAVIGATION AID)	5'-2.4"(L)x2'-7.2"(W)x0'-2"(THK)	1 EA
SP-121B/C/D	SOLAR PANEL	5'-2.4"(L)x2'-7"(W)x0'-2"(THK)	3 EA
VT-1201	VENT TIP	8" DIA x 6'-6¾" (L)	1 EA
Z-121	PEDESTAL CRANE	CAPACITY 5 TONS	1 EA
-	TOTE TANKS (1)	4'-0"(L) x 3'-6"(W) x 2'-0½"(H)	3 EA
-	FLAME ARRESTOR	ø 6"	1 EA
-	LAYDOWN AREA	14'-5"(L)x6'-6"(W)	1 EA
-	DECK DRAIN	2'-0"(L)x0'-9"(W)	5 EA
-	UHF RADIO LINK	- (1)	1 EA

REFERENCE DRAWING NO	DESCRIPTION
PHEWMO-PHE12-X-EQL-5004	EQUIPMENT LAYOUT SUB CELLAR & BOAT LANDING PHE-12-WELL PLATFORM
PHEWMO-PHE12-X-EQL-5003	EQUIPMENT LAYOUT CELLAR DECK PHE-12-WELL PLATFORM
PHEWMO-PHE12-X-EQL-5002	EQUIPMENT LAYOUT MEZZANINE DECK PHE-12-WELL PLATFORM

MAIN DECK
T.O.S EL.(+)65'-0"

APPROVED FOR CONSTRUCTION

0 5 10 FEET
GRAPHIC SCALE

PERTAMINA HULU ENERGI WMO
RECEIVED
22 JAN 2016
PROJECT

NOTE

1. ALL DIMENSIONS ARE IN FEET & INCHES UNLESS OTHERWISE NOTED
2. TO DEFINE WHETHER LIFTING LUG WILL BE INSTALLED IN THE SAME POINTS AS PEDESTAL CRANE

CONTRACT NO. 189A/TS/OPS/13

REVISIONS

REV	BY	DATE	DESCRIPTION	PRE'D	CHK'D	APP'D
1	AND	19-JAN-2016	RE-APPROVED FOR CONSTRUCTION	STR	AGW/AW	JH/AHR
0	AND	17-NOV-2015	APPROVED FOR CONSTRUCTION	STR	AGW/AW	JH/AHR
C	LNG	12-OCT-2015	RE ISSUED FOR APPROVAL	STR	AGW/AW	JH/AHR
B	LNG	17-SEP-2015	ISSUED FOR APPROVAL	STR	AGW/AW	JH/AHR
A	AND	01-SEP-2015	ISSUED FOR REVEW	STR	AGW/AW	JH/AHR

REF. NO.

ENGINEERING APPROVAL

	BY	DATE
PROCESS		
ELECTRICAL		
INSTRUMENT		
STRUCTURAL		
MECHANICAL		25/1/16
PIPING		25/1/16
PIPELINE		
PROCESS SAFETY		

PHE WMO APP'D
DATE
CONTRACTOR APP'D
DATE: 21/1/2016

PROJECT TITLE : EPCI-1 : PHE-12, PHE-24, AND CPP2 PLATFORM AND PIPELINE

PERTAMINA PHE WMO

CONSORTIUM

PT. TIMAS SUPLINDO | PT. GUNANUSA UTAMA FABRICATORS

EQUIPMENT LAYOUT
MAIN DECK
PHE-12 WELL PLATFORM

SCALE	DOCUMENT No	SHEET			REV.
3/16"=1'-0"	PHEWMO-PHE12-X-EQL-5001	1	OF	1	1

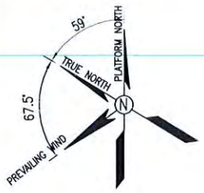

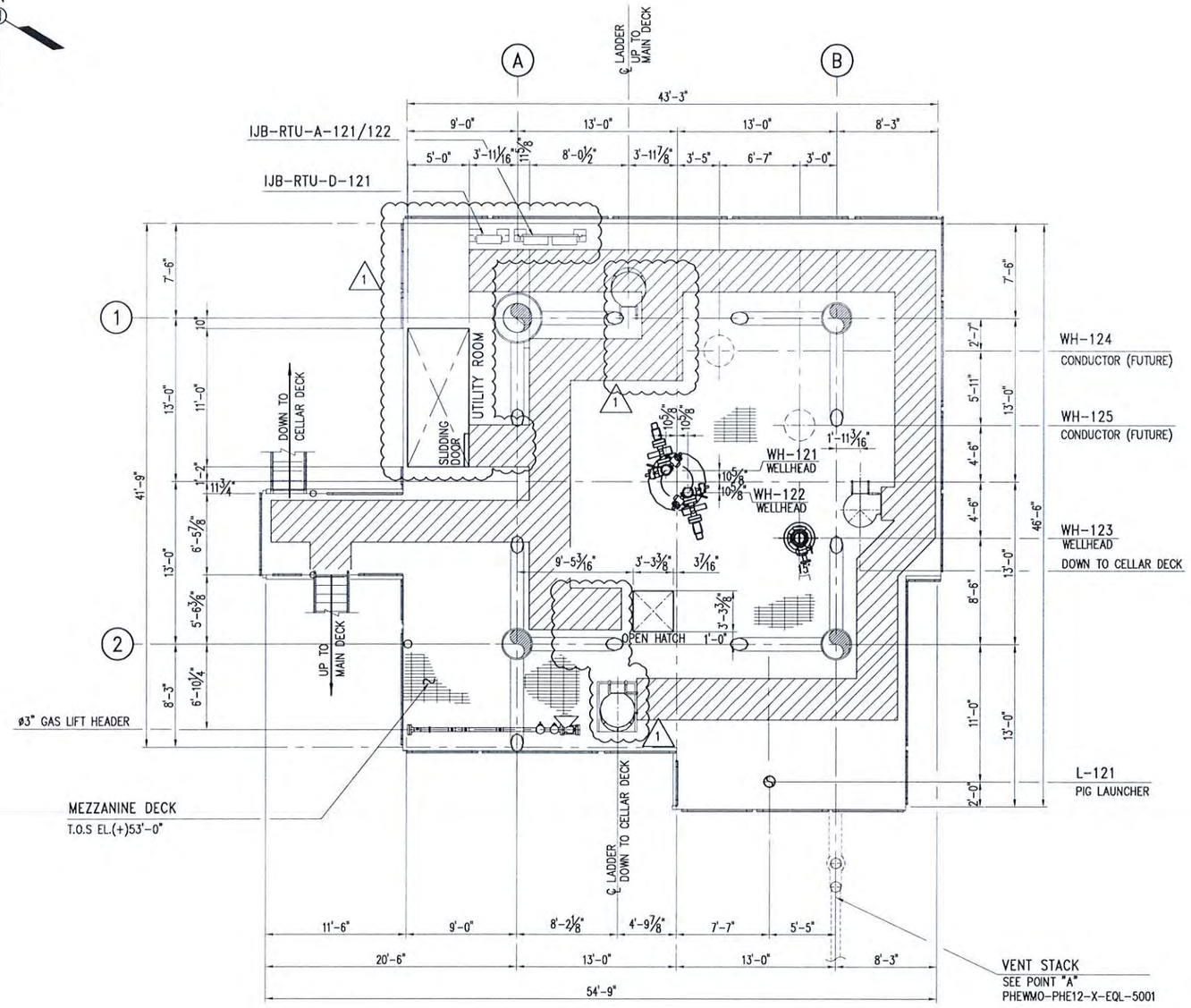

MEZZANINE DECK
T.O.S EL(+)53'-0"

RIG APPROACH

KEY – ELEVATION

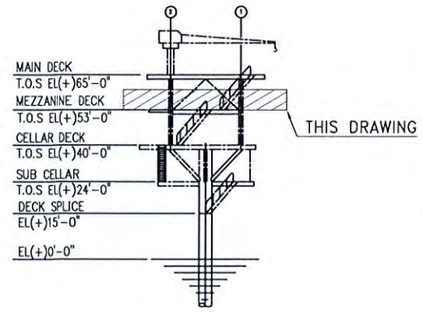

LOOKING EAST

LEGEND

GRATING

ESCAPE ROUTE

EQUIPMENT LIST

TAG NO.	DESCRIPTIONS	EQUIPMENT SIZE	QTY
IJB-RTU-A-121	JUNCTION BOX	2'-0"(L)x0'-8"(W)x2'-6"(H)	1 EA
IJB-RTU-A-122	JUNCTION BOX	2'-0"(L)x0'-8"(W)x2'-6"(H)	1 EA
IJB-RTU-D-121	JUNCTION BOX	2'-0"(L)x0'-8"(W)x2'-6"(H)	1 EA
WH-121	WELLHEAD	–	1 EA
WH-122	WELLHEAD	–	1 EA
WH-123	WELLHEAD	–	1 EA
WH-124	CONDUCTOR (FUTURE)	–	1 EA
WH-125	CONDUCTOR (FUTURE)	–	1 EA
–	3"ø GAS LIFT HEADER	–	1 EA
–	UTILITY ROOM	11'-0"(L)x5'-0"(W)x8'-0"(H)	1 EA
–	VENT STACK	–	1 EA

PERTAMINA HULU ENERGI WMO
RECEIVED
22 JAN 2016
PROJECT

APPROVED FOR CONSTRUCTION

0 5 10 FEET
GRAPHIC SCALE

REFERENCE DRAWING NO	DESCRIPTION
PHEWMO-PHE12-X-EQL-5004	EQUIPMENT LAYOUT SUB CELLAR & BOAT LANDING PHE-12-WELL PLATFORM
PHEWMO-PHE12-X-EQL-5003	EQUIPMENT LAYOUT CELLAR DECK PHE-12-WELL PLATFORM
PHEWMO-PHE12-X-EQL-5001	EQUIPMENT LAYOUT MAIN DECK PHE-12-WELL PLATFORM

NOTE

1. ALL DIMENSIONS ARE IN FEET & INCHES UNLESS OTHERWISE NOTED

CONTRACT NO. 189A/TS/OPS/13

REVISIONS

REV	BY	DATE	DESCRIPTION	PRE'D	CHK'D	APP'D
1	AND	19-JAN-2016	RE-APPROVED FOR CONSTRUCTION	STR	AGW/AW	JH/AHR
0	AND	17-NOV-2015	APPROVED FOR CONSTRUCTION	STR	AGW/AW	JH/AHR
C	LNG	12-OCT-2015	RE ISSUED FOR APPROVAL	STR	AGW/AW	JH/AHR
B	LNG	17-SEP-2015	ISSUED FOR APPROVAL	STR	AGW/AW	JH/AHR
A	AND	01-SEP-2015	ISSUED FOR REVIEW	STR	AGW/AW	JH/AHR

REF. NO.

ENGINEERING APPROVAL	BY	DATE
PROCESS		
ELECTRICAL		
INSTRUMENT		
STRUCTURAL		
MECHANICAL		25/01/16
PIPING		
PIPELINE		
PROCESS SAFETY		

PHE WMO APP'D
DATE:
CONTRACTOR APP'D
DATE: 21/1/2016

PROJECT TITLE : EPCI-1 : PHE-12, PHE-24, AND CPP2 PLATFORM AND PIPELINE

PERTAMINA PHE WMO

CONSORTIUM

PT. TIMAS SUPLINDO PT. GUNANUSA UTAMA FABRICATORS

EQUIPMENT LAYOUT
MEZZANINE DECK
PHE-12 WELL PLATFORM

SCALE	DOCUMENT No	SHEET	REV.
3/16"=1'-0"	PHEWMO-PHE12-X-EQL-5002	1 OF 1	1

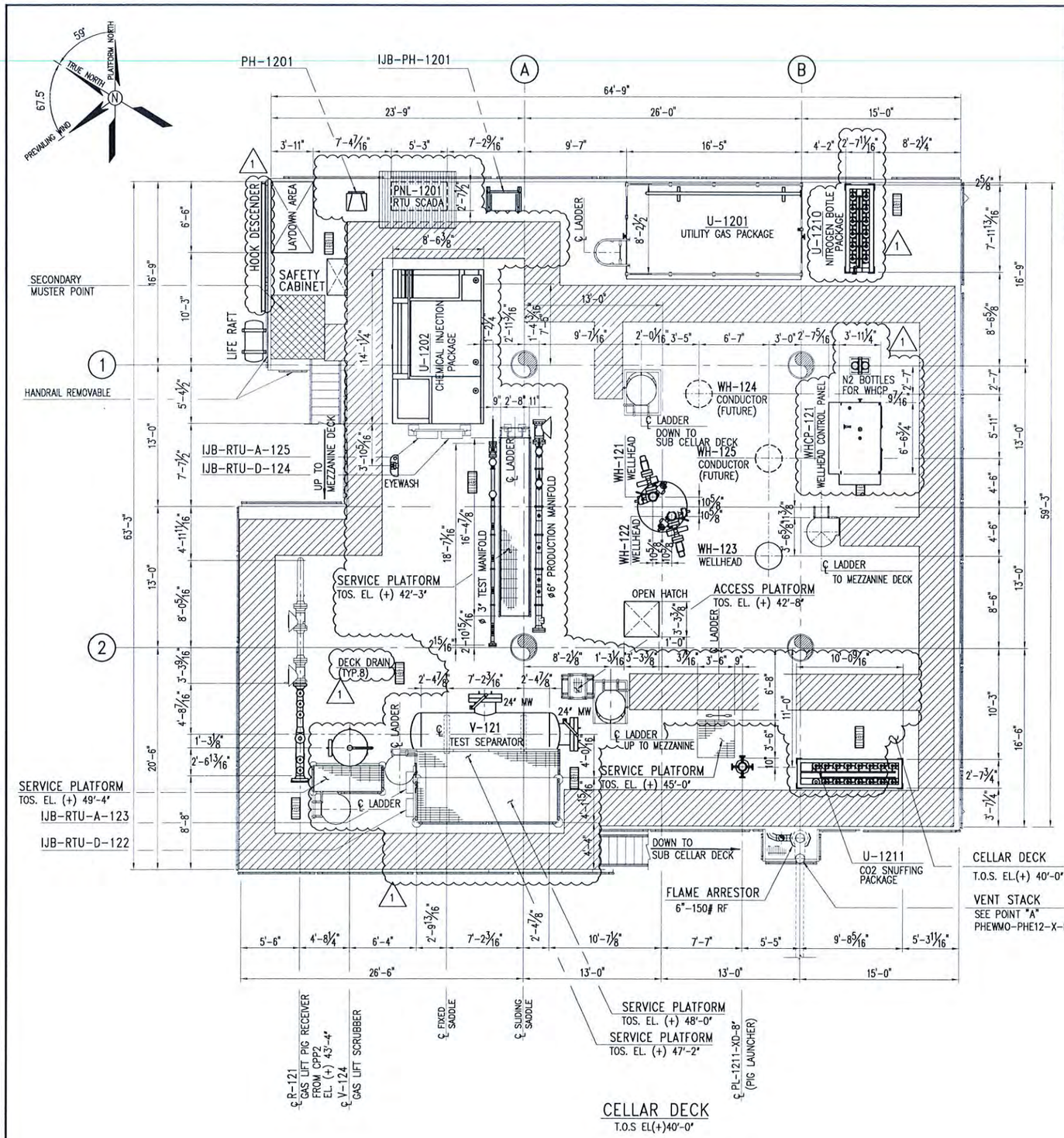

RIG APPROACH

EQUIPMENT LIST

TAG NO.	DESCRIPTIONS	EQUIPMENT SIZE	QTY
-	ø 8" TEST MANIFOLD	-	1 EA
-	ø 6" PRODUCTION MANIFOLD	-	1 EA
-	LAYDOWN AREA	6'-8"(L) x 3'-11"(W)	1 EA
-	SAFETY CABINET	3'-4"(L)x1'-10¾"(W)x2'-3⅜"(H)	1 EA
-	LIFE RAFT	-	1 EA
-	DECK DRAIN	2'-0"(L)x0'-9"(W)	8 EA
-	EYEWASH	1'-11⅞"(L)x0'-8⅞"(W)x1'-3¹⁵⁄₁₆"(H)	1 EA
-	HOOK DESCENDER	11'-8"(L)x6'-0"(H)	1 EA

KEY – ELEVATION

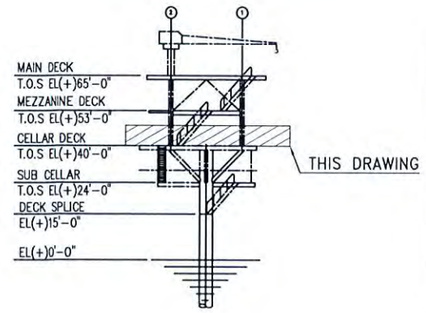

LOOKING EAST

LEGEND

- GRATING
- PLATE
- ESCAPE ROUTE

EQUIPMENT LIST

TAG NO.	DESCRIPTIONS	EQUIPMENT SIZE	QTY
IJB-RTU-A-121	JUNCTION BOX	2'-0"(L) x 0'-8"(W) x 2'-6"(H)	1 EA
IJB-RTU-A-122	JUNCTION BOX	2'-0"(L) x 0'-8"(W) x 2'-6"(H)	1 EA
IJB-RTU-D-121	JUNCTION BOX	2'-0"(L) x 0'-8"(W) x 2'-6"(H)	1 EA
IJB-RTU-A-125	JUNCTION BOX	2'-0"(L) x 0'-8"(W) x 2'-6"(H)	1 EA
IJB-RTU-D-124	JUNCTION BOX	2'-0"(L) x 0'-8"(W) x 2'-6"(H)	1 EA
IJB-RTU-A-123	JUNCTION BOX	2'-0"(L) x 0'-8"(W) x 2'-6"(H)	1 EA
IJB-RTU-D-122	JUNCTION BOX	2'-0"(L) x 0'-8"(W) x 2'-6"(H)	1 EA
IJB-PH-1201	JUNCTION BOX	700 (L) x 500 (W) x 1000 (H)	1 EA
PNL-1201	RTU-SCADA	5'-3"(L)x2'-7.1/2"(W)x6'-6.3/4"(H)	1 EA
PH-1201	TELEPHONE	-	1 EA
R-121	GAS LIFT PIG RECEIVER	8 ¾"(ID) x 4'-0"(L) 6 ¾"(ID) x 4'-0"(L)	1 EA
TCB-1201	TELECOM CABINET	5"(L) x 3"(W) x 9"(H)	1 EA
U-1201	INSTR./UTILITY GAS PACKAGE	16'-5"(L)x8'-2½"(W)x16'-7"(H)	1 EA
U-1210	NITROGEN BOTTLE PACKAGE	7'-11.8"(L) x 2'-7.7"(W) x 7'-4.4"(H)	1 EA
U-1211	CO2 SNUFFING PACKAGE	10'-9⁹⁄₁₆"(L) x 2'-8.2"(W) x 7'-2.4"(H)	1 EA
U-1202	CHEMICAL INJECTION PACKAGE	14'-1¼(L)x8'-6⅜"(W)x9'-11½"(H)	1 EA
V-121	TEST SEPARATOR	48"(ID) X 12'-0"(T/T)	1 EA
V-124	GAS LIFT SCRUBBER	22"(ID) x 5'-6"(S/S)	1 EA
WHCP-121	WELLHEAD CONTROL PANEL	7'-6⁹⁄₁₆"(L)x4'-11¹⁄₁₆"(W)x6'-2¹³⁄₁₆"(H)	1 EA

APPROVED FOR CONSTRUCTION

PERTAMINA HULU ENERGI WMO
APPROVED
22 JAN 2016
PROJECT

0 5 FEET 10
GRAPHIC SCALE

REFERENCE DRAWING NO	DESCRIPTION
PHEWMO-PHE12-X-EQL-5004	EQUIPMENT LAYOUT SUB CELLAR & BOAT LANDING PHE-12-WELL PLATFORM
PHEWMO-PHE12-X-EQL-5002	EQUIPMENT LAYOUT MEZZANINE DECK PHE-12-WELL PLATFORM
PHEWMO-PHE12-X-EQL-5001	EQUIPMENT LAYOUT MAIN DECK PHE-12-WELL PLATFORM

NOTE

1. ALL DIMENSIONS ARE IN FEET & INCHES UNLESS OTHERWISE NOTED

CONTRACT NO. 189A/TS/OPS/13

REVISIONS

REV	BY	DATE	DESCRIPTION	PRE'D	CHK'D	APP'D
1	AND	19-JAN-2016	RE-APPROVED FOR CONSTRUCTION	STR	AGW/AW	JH/AHR
0	AND	17-NOV-2015	APPROVED FOR CONSTRUCTION	STR	AGW/AW	JH/AHR
C	LNG	12-OCT-2015	RE ISSUED FOR APPROVAL	STR	AGW/AW	JH/AHR
B	LNG	17-SEP-2015	ISSUED FOR APPROVAL	STR	AGW/AW	JH/AHR
A	AND	01-SEP-2015	ISSUED FOR REVIEW	STR	AGW/AW	JH/AHR

REF. NO.

ENGINEERING APPROVAL	BY	DATE
PROCESS		
ELECTRICAL		
INSTRUMENT		
STRUCTURAL		
MECHANICAL		25/1/16
PIPING		25/1/16
PIPELINE		
PROCESS SAFETY		

PHE WMO APP'D
DATE:
CONTRACTOR APP'D
DATE: 21/1/2016

PROJECT TITLE : EPCI-1 : PHE-12, PHE-24, AND CPP2 PLATFORM AND PIPELINE

PERTAMINA PHE WMO
CONSORTIUM
PT. TIMAS SUPLINDO PT. GUNANUSA UTAMA FABRICATORS

EQUIPMENT LAYOUT
CELLAR DECK
PHE-12 WELL PLATFORM

SCALE	DOCUMENT No	SHEET			REV.
3/16"=1'-0"	PHEWMO-PHE12-X-EQL-5003	1	OF	1	1

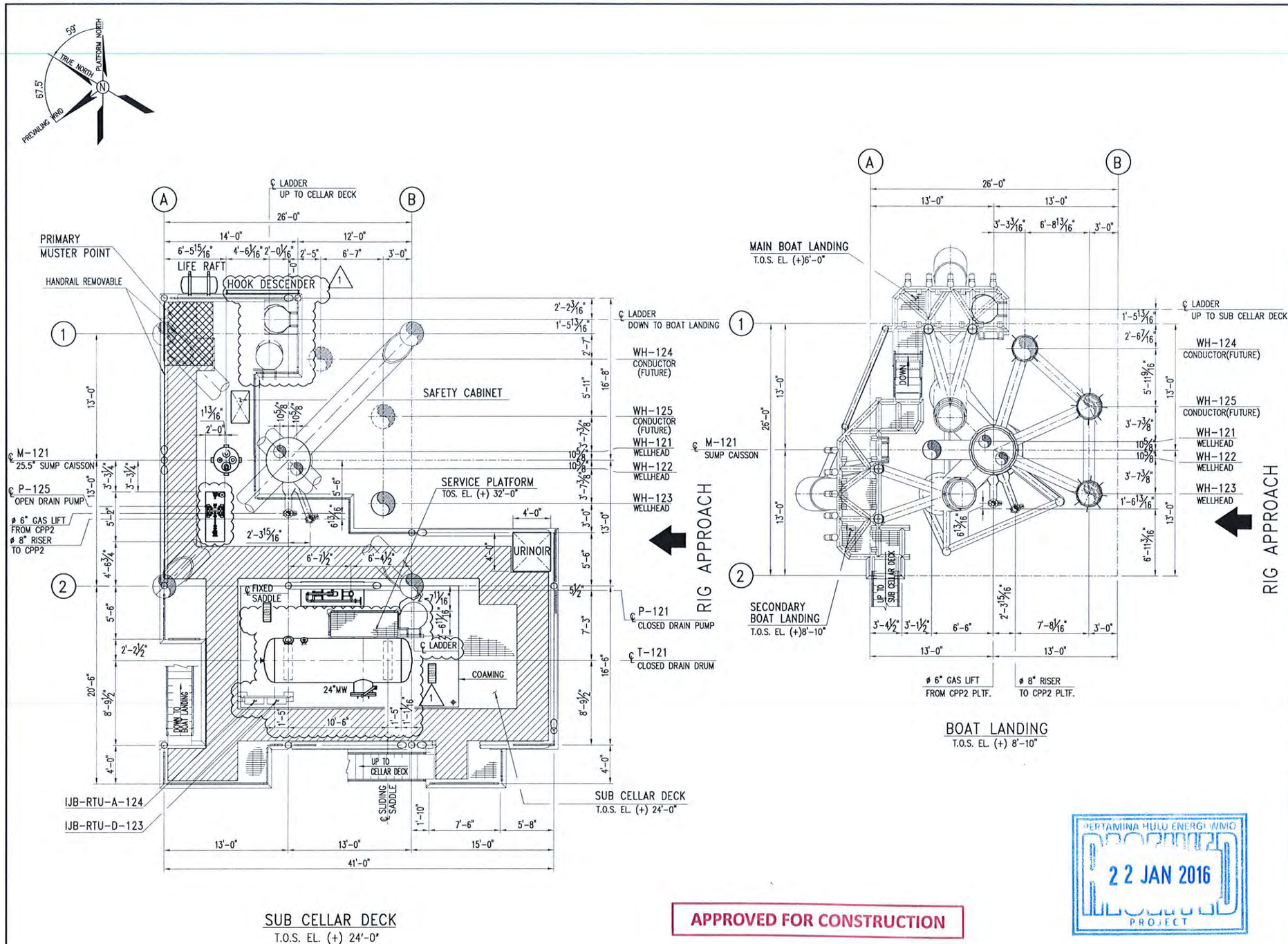

KEY – ELEVATION

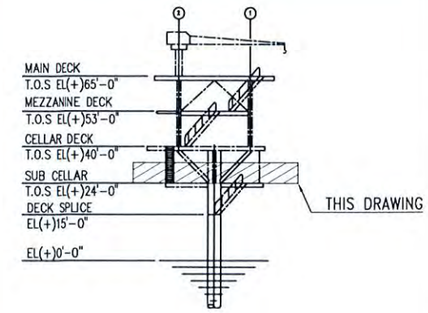

LOOKING EAST

LEGEND

GRATING

ESCAPE ROUTE

EQUIPMENT LIST

TAG NO.	DESCRIPTIONS	EQUIPMENT SIZE	QTY
IJB-RTU-A-124	JUNCTION BOX	2'-0"(L) x 0'-8"(W) x 3'-6"(H)	1 EA
IJB-RTU-D-123	JUNCTION BOX	2'-0"(L) x 0'-8"(W) x 3'-6"(H)	1 EA
M-121	SUMP CAISSON	25.5"(OD)x73'-11"(L)	1 EA
P-121	CLOSED DRAIN PUMP	46⅝"(H)x80"(L)x28"(W)	1 EA
P-125	OPEN DRAIN PUMP	–	1 EA
T-121	CLOSED DRAIN DRUM	55"(ID) x 13'-4" T/T	1 EA
–	SAFETY CABINET	3'-4"(L)x1'-10¾"(W)x2'-3⅜"(H)	1 EA
–	URINOIR	4'-0"(L)x4'-0"(W)x7'-0"(H)	1 EA
–	LIFE RAFT	–	1 EA
–	HOOK DESCENDER	7'-6"(L)x6'-0"(H)	1 EA
–	DECK DRAIN	2'-0"(L)x0'-9"(W)	2 EA

1

REFERENCE DRAWING NO	DESCRIPTION
PHEWMO-PHE12-X-EQL-5003	EQUIPMENT LAYOUT CELLAR DECK PHE-12-WELL PLATFORM
PHEWMO-PHE12-X-EQL-5002	EQUIPMENT LAYOUT MEZZANINE DECK PHE-12-WELL PLATFORM
PHEWMO-PHE12-X-EQL-5001	EQUIPMENT LAYOUT MAIN DECK PHE-12-WELL PLATFORM

0 5 10 FEET
GRAPHIC SCALE

PERTAMINA HULU ENERGI WMO
RECEIVED
22 JAN 2016
PROJECT

APPROVED FOR CONSTRUCTION

NOTE

1. ALL DIMENSIONS ARE IN FEET & INCHES UNLESS OTHERWISE NOTED
2. MAIN BOAT LANDING USE DURING NORMAL OPERATION
3. SECONDARY BOAT LANDING USE DURING STROM WEATHER

CONTRACT NO. 189A/TS/OPS/13

REVISIONS

REV	BY	DATE	DESCRIPTION	PRE'D	CHK'D	APP'D
1	AND	19-JAN-2016	RE-APPROVED FOR CONSTRUCTION	STR	AGW/AW	JH/AHR
0	AND	17-NOV-2015	APPROVED FOR CONSTRUCTION	STR	AGW/AW	JH/AHR
C	LNG	12-OCT-2015	RE ISSUED FOR APPROVAL	STR	AGW/AW	JH/AHR
B	LNG	17-SEP-2015	ISSUED FOR APPROVAL	STR	AGW/AW	JH/AHR
A	AND	01-SEP-2015	ISSUED FOR REVIEW	STR	AGW/AW	JH/AHR

REF. NO.

ENGINEERING APPROVAL	BY	DATE
PROCESS		
ELECTRICAL		
INSTRUMENT		
STRUCTURAL		
MECHANICAL		25/1/16
PIPING		25/01/16
PIPELINE		
PROCESS SAFETY		

PHE WMO APP'D
DATE:
CONTRACTOR APP'D
DATE: 21/1/2016

PROJECT TITLE : EPCI-1 : PHE-12, PHE-24, AND CPP2 PLATFORM AND PIPELINE

PERTAMINA PHE WMO

CONSORTIUM

PT. TIMAS SUPLINDO PT. GUNANUSA UTAMA FABRICATORS

EQUIPMENT LAYOUT
SUB CELLAR DECK AND BOAT LANDING
PHE-12 WELL PLATFORM

SCALE	DOCUMENT No	SHEET			REV.
3/16"=1'-0"	PHEWMO-PHE12-X-EQL-5004	1	OF	1	1

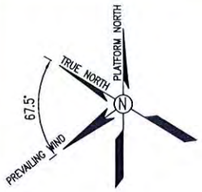

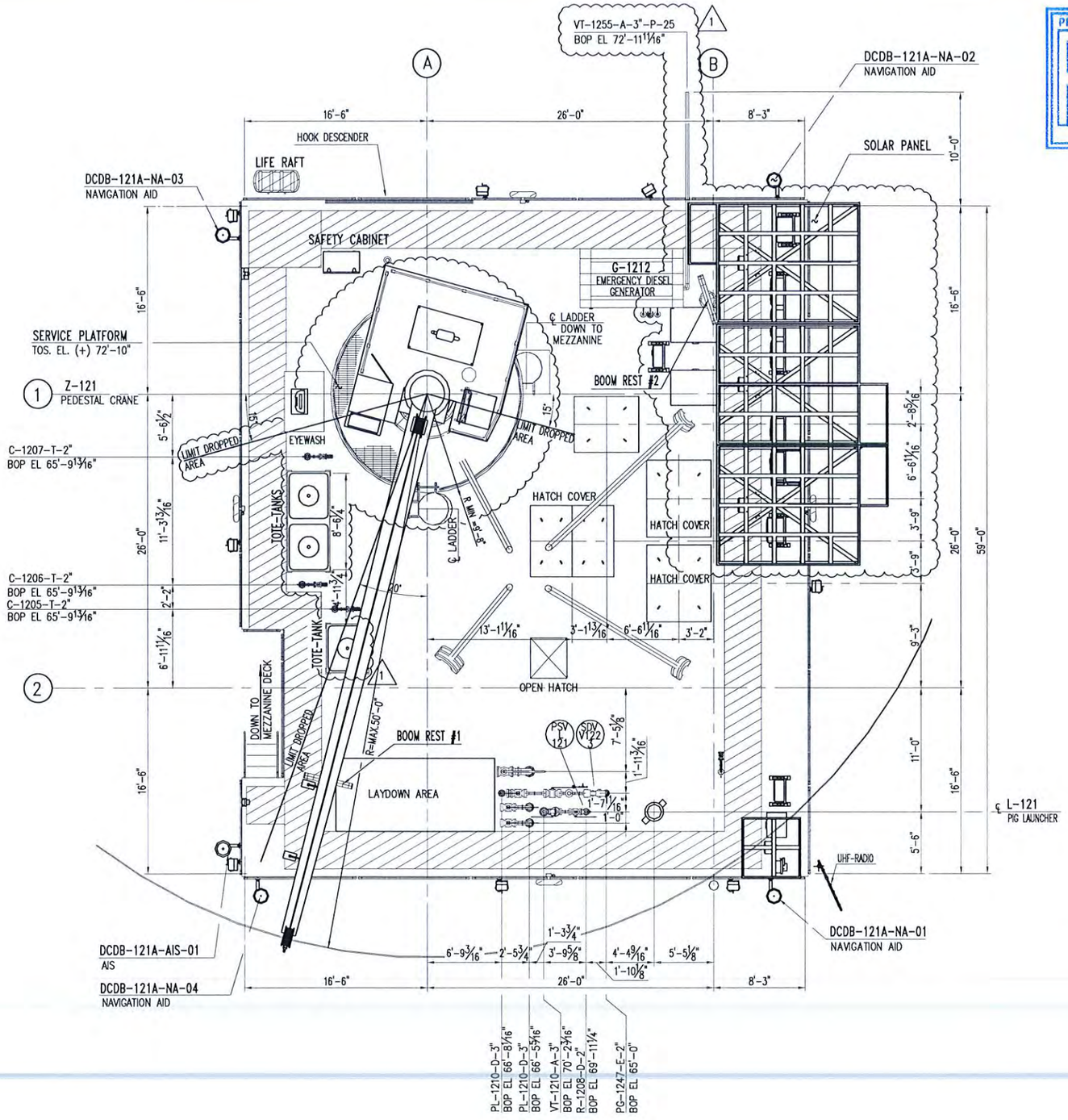

ABOVE MAIN DECK

T.O.S EL.(+)65'-0"~ABOVE

PERTAMINA HULU ENERGI WMO
DECLASSIFIED
01 FEB 2016
PROJECT

APPROVED FOR CONSTRUCTION

KEY – ELEVATION

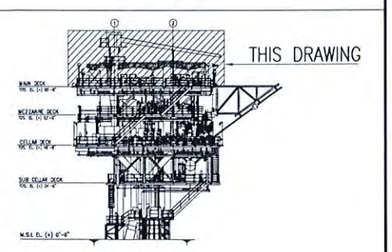

LOOKING EAST

LEGEND

- GRATING
- PLATE
- ESCAPE ROUTE

0 5 10 FEET
GRAPHIC SCALE

REFERENCE DRAWING NO	DESCRIPTION
PHEWMO-PHE12-X-PPD-5002	PIPING LAYOUT BELOW MAIN DECK PHE 12
PHEWMO-PHE12-X-EQL-5001	EQUIPMENT LAYOUT MAIN DECK PHE-12 WELL PLATFORM

NOTE

1. ALL DIMENSIONS ARE IN FEET & INCHES UNLESS OTHERWISE NOTED.

CONTRACT NO. 189A/TS/OPS/13

REVISIONS

REV	BY	DATE	DESCRIPTION	PRE'D	CHK'D	APP'D
1	AND	28-JAN-2016	RE-APPROVED FOR CONSTRUCTION	STR	AGW/AW	JH/AHR
0	LNG	29-DEC-2015	APPROVED FOR CONSTRUCTION	STR	AGW/AW	JH/AHR
C	TRI	18-DEC-2015	RE-ISSUED FOR APPROVAL	STR	AGW/AW	JH/AHR
B	AND	30-NOV-2015	ISSUED FOR APPROVAL	STR	AGW/AW	JH/AHR
A	AND	20-OCT-2015	ISSUED FOR REVIEW	STR	AGW/AW	JH/AHR

REF. NO.

ENGINEERING APPROVAL	BY	DATE
PROCESS		
ELECTRICAL		
INSTRUMENT		
STRUCTURAL		
MECHANICAL		
PIPING		05 Feb '16
PIPELINE		
PROCESS SAFETY		

PHE WMO APP'D

DATE:

CONTRACTOR APP'D

DATE: 01/2/2016

PROJECT TITLE : EPCI-1 : PHE-12, PHE-24, AND CPP2 PLATFORM AND PIPELINE

PERTAMINA PHE WMO

CONSORTIUM

PT TIMAS SUPLINDO PT. GUNANUSA UTAMA FABRICATORS

PIPING LAYOUT ABOVE MAIN DECK PHE 12

SCALE	DOCUMENT No	SHEET			REV.
3/16"=1'-0"	PHEWMO-PHE12-X-PPD-5001	1	OF	1	1

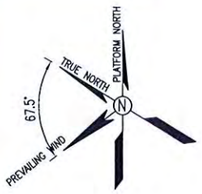

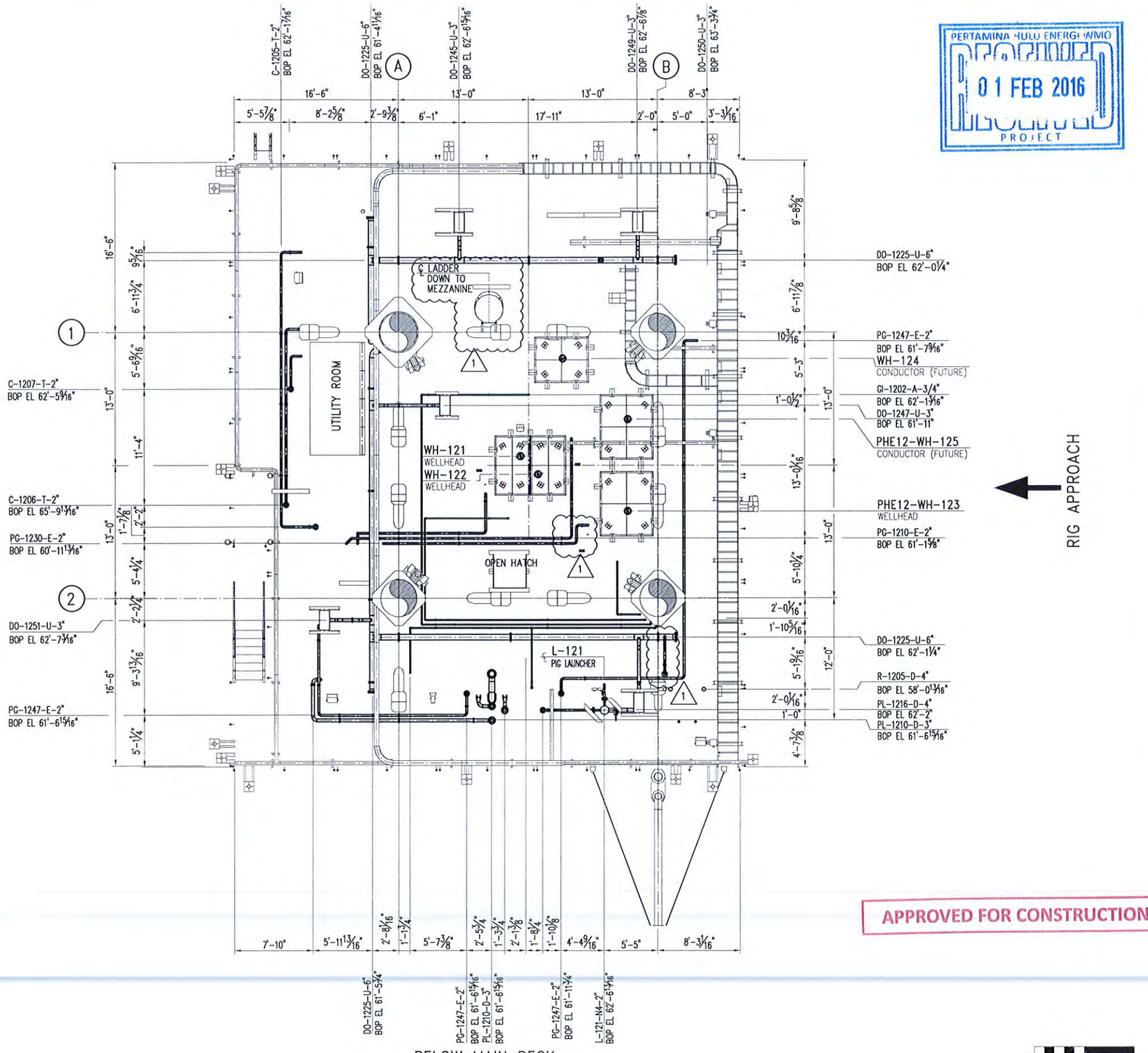

BELOW MAIN DECK

EL. 59'-0" ~ 65'-0"

PERTAMINA HULU ENERGI WMO
RECEIVED
01 FEB 2016
PROJECT

APPROVED FOR CONSTRUCTION

KEY – ELEVATION

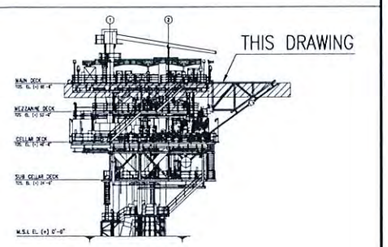

LOOKING EAST

LEGEND

0 5 10FEET
GRAPHIC SCALE

REFERENCE DRAWING NO	DESCRIPTION
PHEWMO-PHE12-X-PPD-5009	PIPING LAYOUT LOOKING NORTH PHE 12
PHEWMO-PHE12-X-PPD-5001	PIPING LAYOUT MAIN DECK PHE 12
PHEWMO-PHE12-X-EQL-5001	EQUIPMENT LAYOUT MAIN DECK PHE-12 WELL PLATFORM

NOTE

1. ALL DIMENSIONS ARE IN FEET & INCHES UNLESS OTHERWISE NOTED.

CONTRACT NO. 189A/TS/OPS/13

REVISIONS

REV	BY	DATE	DESCRIPTION	PRE'D	CHK'D	APP'D
1	AND	28-JAN-2016	RE-APPROVED FOR CONSTRUCTION	STR	AGW/AW	JH/AHR
0	HER	29-DEC-2015	APPROVED FOR CONSTRUCTION	STR	AGW/AW	JH/AHR
C	TRI	12-DEC-2015	RE-ISSUED APPROVAL	STR	AGW/AW	JH/AHR
B	AND	30-NOV-2015	ISSUED FOR APPROVAL	STR	AGW/AW	JH/AHR
A	AND	20-OCT-2015	ISSUED FOR REVEW	STR	AGW/AW	JH/AHR

REF. NO.

ENGINEERING APPROVAL	BY	DATE
PROCESS		
ELECTRICAL		
INSTRUMENT		
STRUCTURAL		
MECHANICAL		
PIPING		05 Feb '16
PIPELINE		
PROCESS SAFETY		

PHE WMO APP'D

DATE:

CONTRACTOR APP'D

DATE: 01/2/2016

PROJECT TITLE : EPCI-1 : PHE-12, PHE-24, AND CPP2 PLATFORM AND PIPELINE

PERTAMINA PHE WMO

CONSORTIUM

PT. TIMAS SUPLINDO PT. GUNANUSA UTAVA FABRICATORS

PIPING LAYOUT
BELOW MAIN DECK
PHE 12

SCALE	DOCUMENT No	SHEET			REV.
3/16"=1'-0"	PHEWMO-PHE12-X-PPD-5002	1	OF	1	1

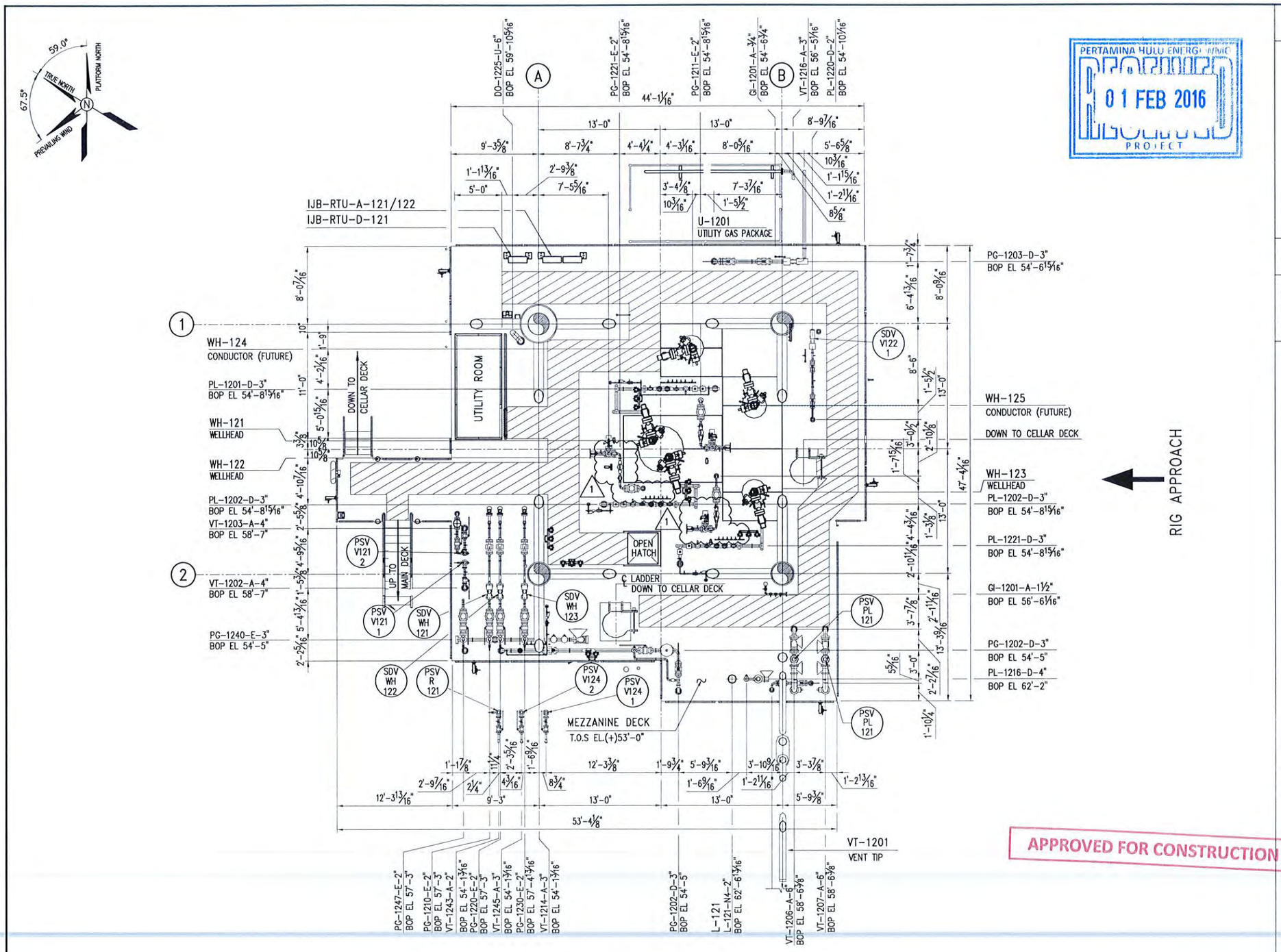

ABOVE MEZZANINE DECK

T.O.S EL. (+)53'-0" ~ 60'-4"

PERTAMINA HULU ENERGI WMO
RECEIVED
01 FEB 2016
PROJECT

APPROVED FOR CONSTRUCTION

KEY – ELEVATION

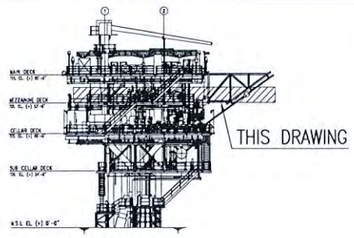

LOOKING EAST

LEGEND

- GRATING
- PLATE
- ESCAPE ROUTE

0 5 10 FEET
GRAPHIC SCALE

REFERENCE DRAWING NO	DESCRIPTION
PHEWMO-PHE12-X-PPD-5004	PIPING LAYOUT BELOW MEZZANINE DECK PHE 12
PHEWMO-PHE12-X-PPD-5002	PIPING LAYOUT BELOW MAIN DECK PHE 12
PHEWMO-PHE12-X-EQL-5002	EQUIPMENT LAYOUT MEZANINE DECK PHE-12-WELL PLATFORM

NOTE

1. ALL DIMENSIONS ARE IN FEET & INCHES UNLESS OTHERWISE NOTED.

CONTRACT NO. 189A/TS/OPS/13

REVISIONS

REV	BY	DATE	DESCRIPTION	PRE'D	CHK'D	APP'D
1	AND	28-JAN-2016	RE-APPROVED FOR CONSTRUCTION	STR	AGW/AW	JH/AHR
0	AND	29-DEC-2015	APPROVED FOR CONSTRUCTION	STR	AGW/AW	JH/AHR
C	AND	18-DEC-2015	RE-ISSUED FOR APPROVAL	STR	AGW/AW	JH/AHR
B	AND	30-NOV-2015	ISSUED FOR APPROVAL	STR	AGW/AW	JH/AHR
A	LNG	20-OCT-2015	ISSUED FOR REVIEW	STR	AGW/AW	JH/AHR

REF. NO.

ENGINEERING APPROVAL	BY	DATE
PROCESS		
ELECTRICAL		
INSTRUMENT		
STRUCTURAL		
MECHANICAL		
PIPING	CPP	05 FEB 16
PIPELINE		
PROCESS SAFETY		

PHE WMO APP'D
DATE:
CONTRACTOR APP'D
DATE: 01/2/2016

PROJECT TITLE : EPCI-1 : PHE-12, PHE-24, AND CPP2 PLATFORM AND PIPELINE

PERTAMINA PHE WMO

CONSORTIUM

PT. TIMAS SUPLINDO PT. GUNANUSA UTAMA FABRICATORS

PIPING LAYOUT
ABOVE MEZZANINE DECK
PHE-12

SCALE	DOCUMENT No	SHEET			REV.
3/16"=1'-0"	PHEWMO-PHE12-X-PPD-5003	1	OF	1	1

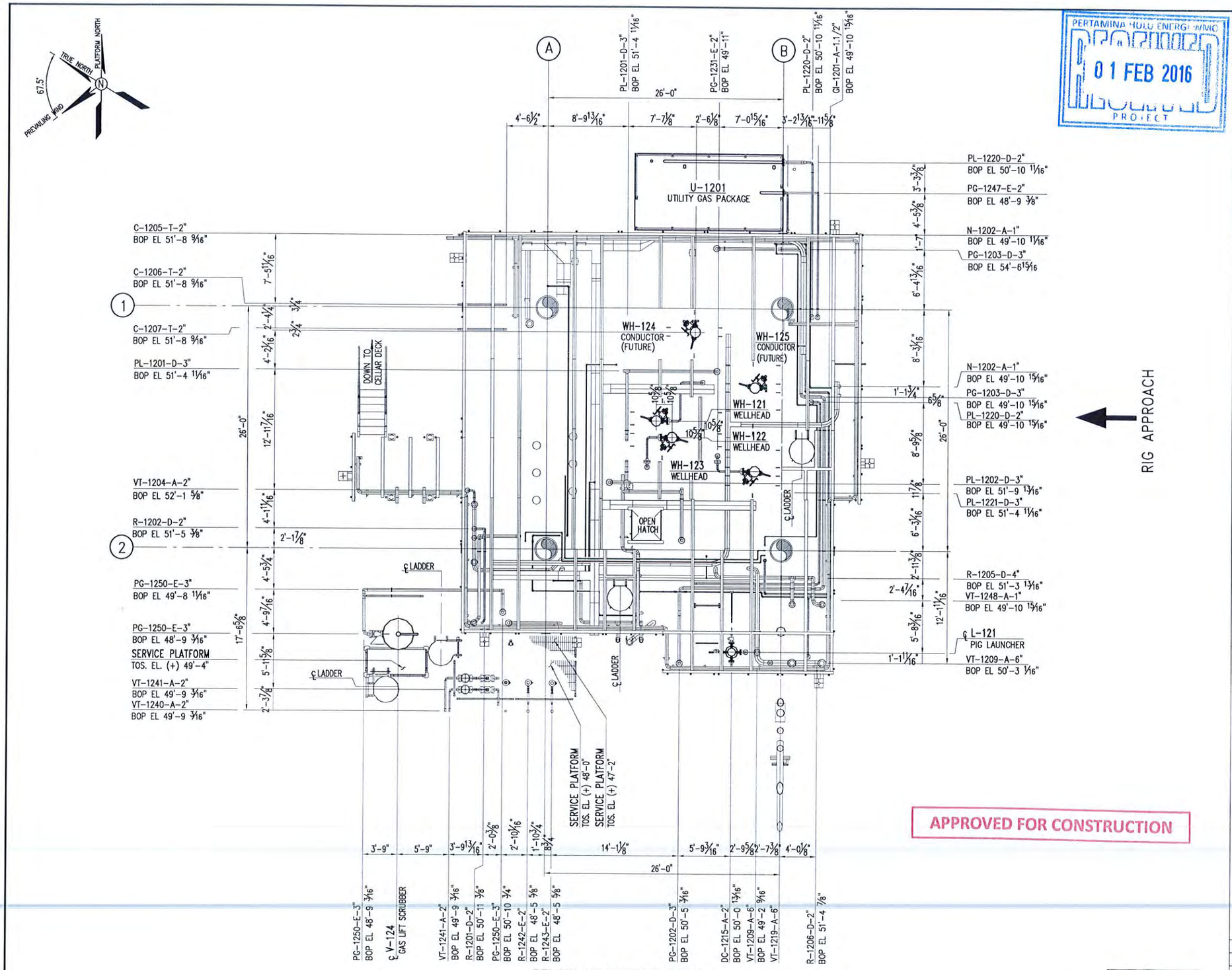

BELOW MEZZANINE DECK

EL. 46'-6" ~ 53'-0"

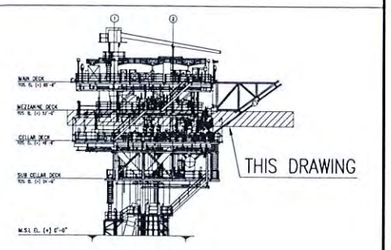

KEY – ELEVATION

LOOKING EAST

LEGEND

PERTAMINA HULU ENERGI WMO
01 FEB 2016
PROJECT

APPROVED FOR CONSTRUCTION

0 5 10 FEET
GRAPHIC SCALE

REFERENCE DRAWING NO	DESCRIPTION
PHEWMO-PHE12-X-PPD-5005	PIPING LAYOUT CELLAR DECK PHE 12
PHEWMO-PHE12-X-PPD-5003	PIPING LAYOUT ABOVE MEZZANINE DECK PHE 12
PHEWMO-PHE12-X-EQL-5002	EQUIPMENT LAYOUT MEZZANINE DECK PHE-12 WELL PLATFORM

NOTE

1. ALL DIMENSIONS ARE IN FEET & INCHES UNLESS OTHERWISE NOTED.

CONTRACT NO. 189A/TS/OPS/13

REF. NO.

REV	BY	DATE	DESCRIPTION	PRE'D	CHK'D	APP'D
1	AND	28-JAN-2016	RE-APPROVED FOR CONSTRUCTION	STR	AGW/AW	JH/AHR
0	TRI	29-DEC-2015	APPROVED FOR CONSTRUCTION	STR	AGW/AW	JH/AHR
C	AND	18-DEC-2015	RE-ISSUED FOR APPROVAL	STR	AGW/AW	JH/AHR
B	AND	30-NOV-2015	ISSUED FOR APPROVAL	STR	AGW/AW	JH/AHR
A	AND	20-OCT-2015	ISSUED FOR REVIEW	STR	AGW/AW	JH/AHR

REVISIONS

ENGINEERING APPROVAL	BY	DATE
PROCESS		
ELECTRICAL		
INSTRUMENT		
STRUCTURAL		
MECHANICAL		
PIPING		05 Feb '16
PIPELINE		
PROCESS SAFETY		

PHE WMO APP'D
DATE:
CONTRACTOR APP'D
DATE: 01/2/2016

PROJECT TITLE : EPCI-1 : PHE-12, PHE-24, AND CPP2 PLATFORM AND PIPELINE

PERTAMINA PHE WMO

CONSORTIUM

PT TIMAS SUPLINDO PT. GUNANUSA UTAMA FABRICATORS

PIPING LAYOUT BELOW MEZZANINE DECK PHE 12

SCALE	DOCUMENT No	SHEET			REV.
3/16"=1'-0"	PHEWMO-PHE12-X-PPD-5004	1	OF	1	1

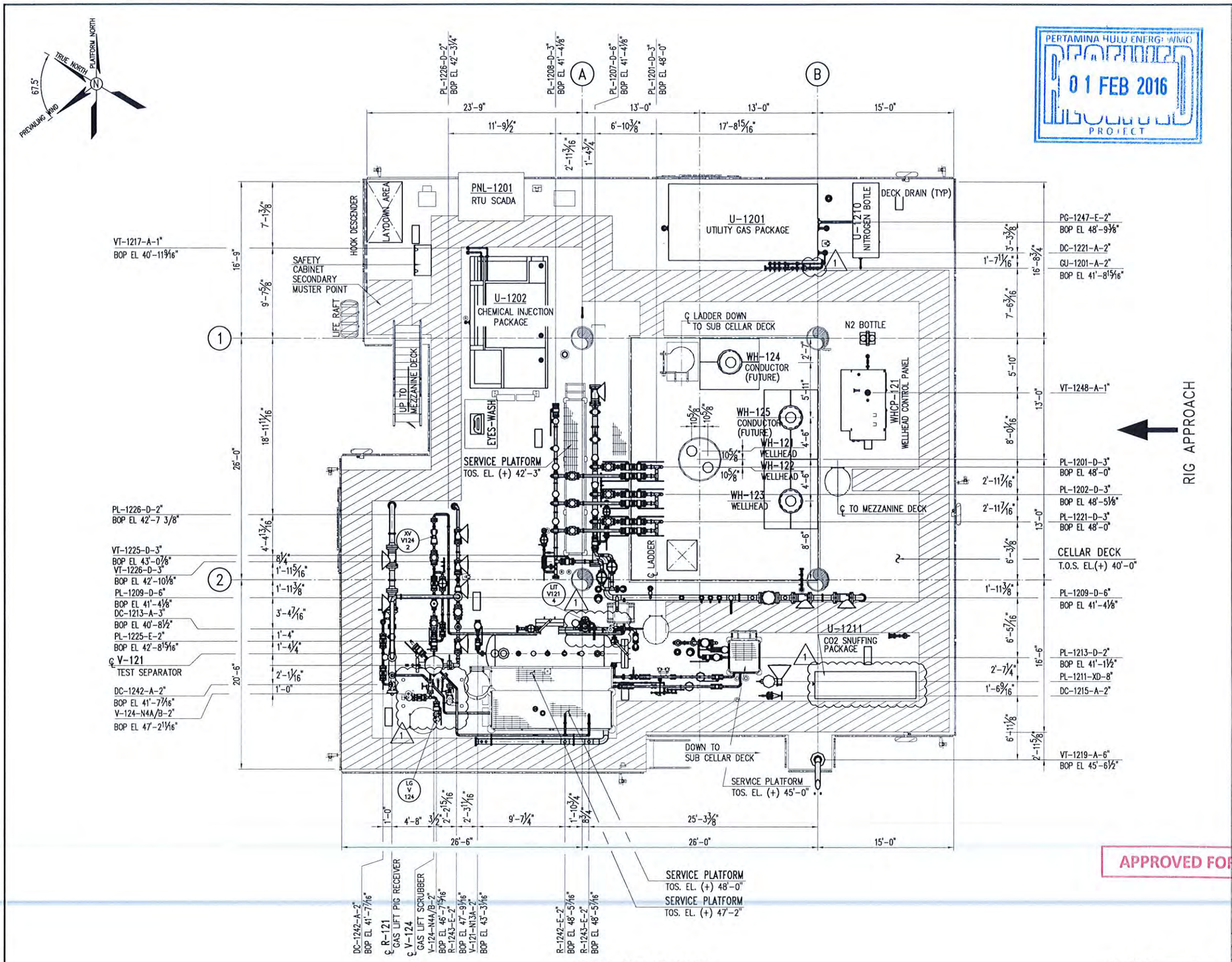

ABOVE CELLAR DECK

EL. 40'-0" ~ 46'-6"

PERTAMINA HULU ENERGI WMO
RECEIVED
01 FEB 2016
PROJECT

APPROVED FOR CONSTRUCTION

KEY – ELEVATION

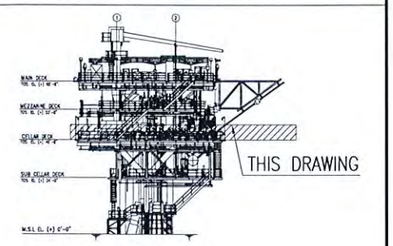

LOOKING EAST

LEGEND

GRATING
PLATE
ESCAPE ROUTE
MUSTER POINT

0 5 10 FEET
GRAPHIC SCALE

REFERENCE DRAWING NO	DESCRIPTION
PHEWMO-PHE12-X-PPD-5006	PIPING LAYOUT BELOW CELLAR DECK PHE-12
PHEWMO-PHE12-X-PPD-5004	PIPING LAYOUT BELOW MEZZANINE DECK PHE-12
PHEWMO-PHE12-X-EQL-5003	EQUIPMENT LAYOUT MEZZANINE DECK PHE-12 WELL PLATFORM

NOTE

1. ALL DIMENSIONS ARE IN FEET & INCHES UNLESS OTHERWISE NOTED.

CONTRACT NO. 189A/TS/CPS/13

REVISIONS

REV	BY	DATE	DESCRIPTION	PRE'D	CHK'D	APP'D
1	AND	28-JAN-2016	RE-APPROVED FOR CONSTRUCTION	STR	AGW/AW	JH/AHR
0	HER	29-DEC-2015	APPROVED FOR CONSTRUCTION	STR	AGW/AW	JH/AHR
C	TRI	18-DEC-2015	RE-ISSUED FOR APPROVAL	STR	AGW/AW	JH/AHR
B	AND	30-NOV-2015	ISSUED FOR APPROVAL	STR	AGW/AW	JH/AHR
A	HER	20-OCT-2015	ISSUED FOR REVIEW	STR	AGW/AW	JH/AHR

REF. NO.

ENGINEERING APPROVAL	BY	DATE
PROCESS		
ELECTRICAL		
INSTRUMENT		
STRUCTURAL		
MECHANICAL		
PIPING		05 Feb '16
PIPELINE		
PROCESS SAFETY		

PHE WMO APP'D
DATE:
CONTRACTOR APP'D
DATE: 01/2/2016

PROJECT TITLE : EPCI-1 : PHE-12, PHE-24, AND CPP2 PLATFORM AND PIPELINE

PERTAMINA PHE WMO

CONSORTIUM

PT. TIMAS SUPLINDO PT. GUNANUSA UTAMA FABRICATORS

PIPING LAYOUT
ABOVE CELLAR DECK
PHE 12

SCALE	DOCUMENT No	SHEET	REV.
3/16"=1'-0"	PHEWMO-PHE12-X-PPD-5005	1 OF 1	1

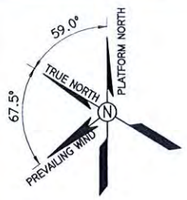

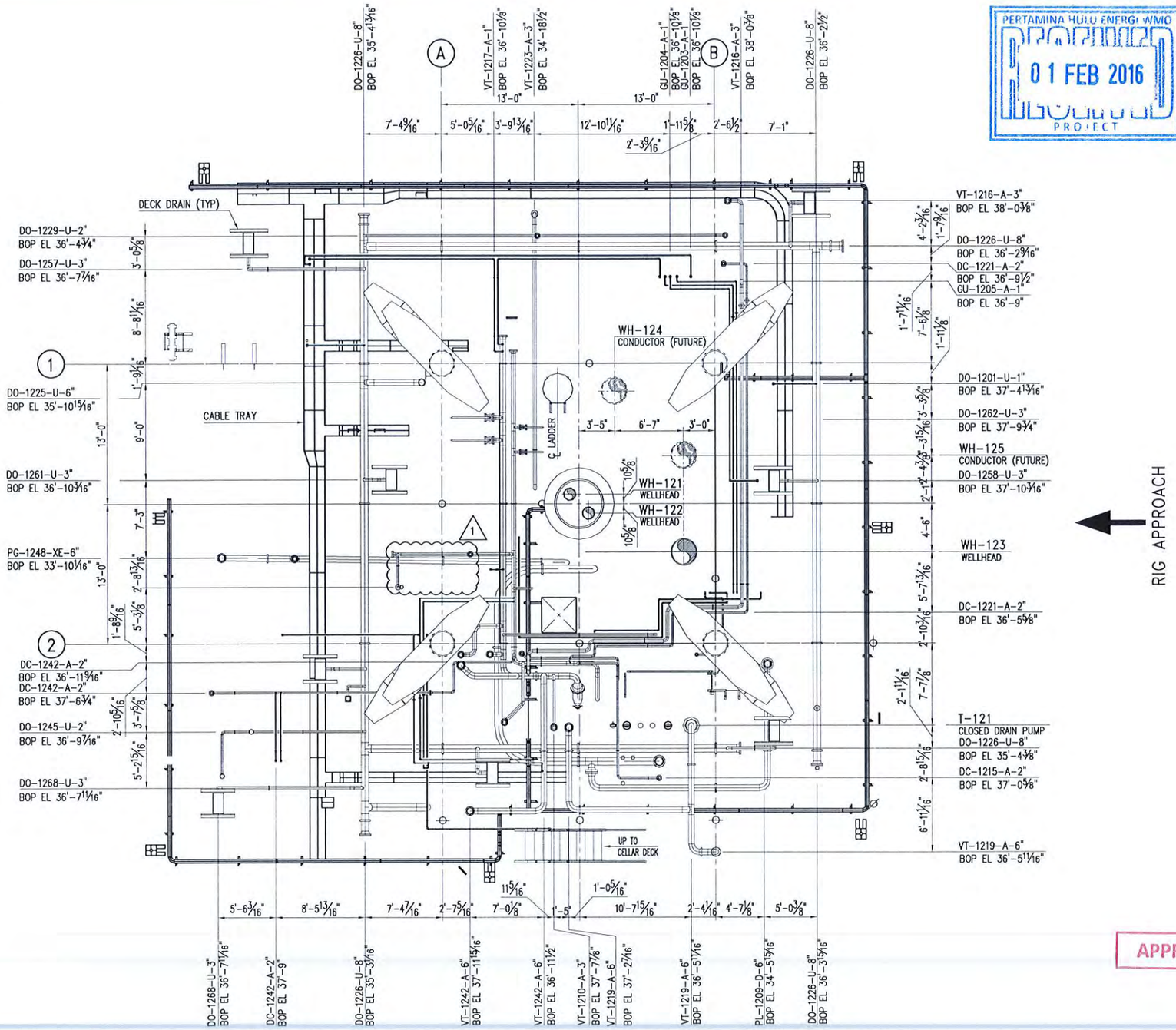

PERTAMINA HULU ENERGI WMO
RECEIVED
01 FEB 2016
PROJECT

APPROVED FOR CONSTRUCTION

BELOW CELLAR DECK

EL. 33'-9" ~ 40'-0"

KEY – ELEVATION

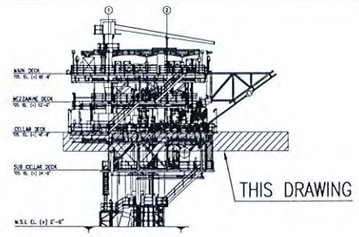

LOOKING EAST

LEGEND

REFERENCE DRAWING NO	DESCRIPTION
PHEWMO-PHE12-X-PPD-5007	PIPING LAYOUT SUBCELLAR DECK PHE-12
PHEWMO-PHE12-X-PPD-5005	PIPING LAYOUT CELLAR DECK PHE-12
PHEWMO-PHE12-X-EQL-5003	EQUIPMENT LAYOUT CELLAR DECK PHE-12-WELL PLATFORM

0 5 10 FEET
GRAPHIC SCALE

NOTE

1. ALL DIMENSIONS ARE IN FEET & INCHES UNLESS OTHERWISE NOTED.

CONTRACT NO. 189A/TS/OPS/13

REF. NO.

REVISIONS

REV	BY	DATE	DESCRIPTION	PRE'D	CHK'D	APP'D
1	AND	28-JAN-2016	RE-APPROVED FOR CONSTRUCTION	STR	AGW/AW	JH/AHR
0	LNG	29-DEC-2015	APPROVED FOR CONSTRUCTION	STR	AGW/AW	JH/AHR
C	AND	18-DEC-2015	RE-ISSUED FOR APPROVAL	STR	AGW/AW	JH/AHR
B	AND	30-NOV-2015	ISSUED FOR APPROVAL	STR	AGW/AW	JH/AHR
A	LNG	20-OCT-2015	ISSUED FOR REVIEW	STR	AGW/RJ	JH/AHR

ENGINEERING APPROVAL	BY	DATE
PROCESS		
ELECTRICAL		
INSTRUMENT		
STRUCTURAL		
MECHANICAL		
PIPING		
PIPELINE		
PROCESS SAFETY		

PHE WMO APP'D
DATE:
CONTRACTOR APP'D
DATE: 01/2/2016

PROJECT TITLE : EPCI-1 : PHE-12, PHE-24, AND CPP2 PLATFORM AND PIPELINE

PERTAMINA PHE WMO
CONSORTIUM
PT. TIMAS SUPLINDO PT. GUNANUSA UTAMA FABRICATORS

PIPING LAYOUT
BELOW CELLAR DECK
PHE-12

SCALE	DOCUMENT No	SHEET		REV.
3/16"=1'-0"	PHEWMO-PHE12-X-PPD-5006	1	OF 1	1

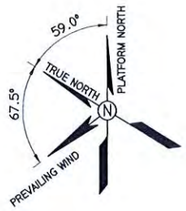

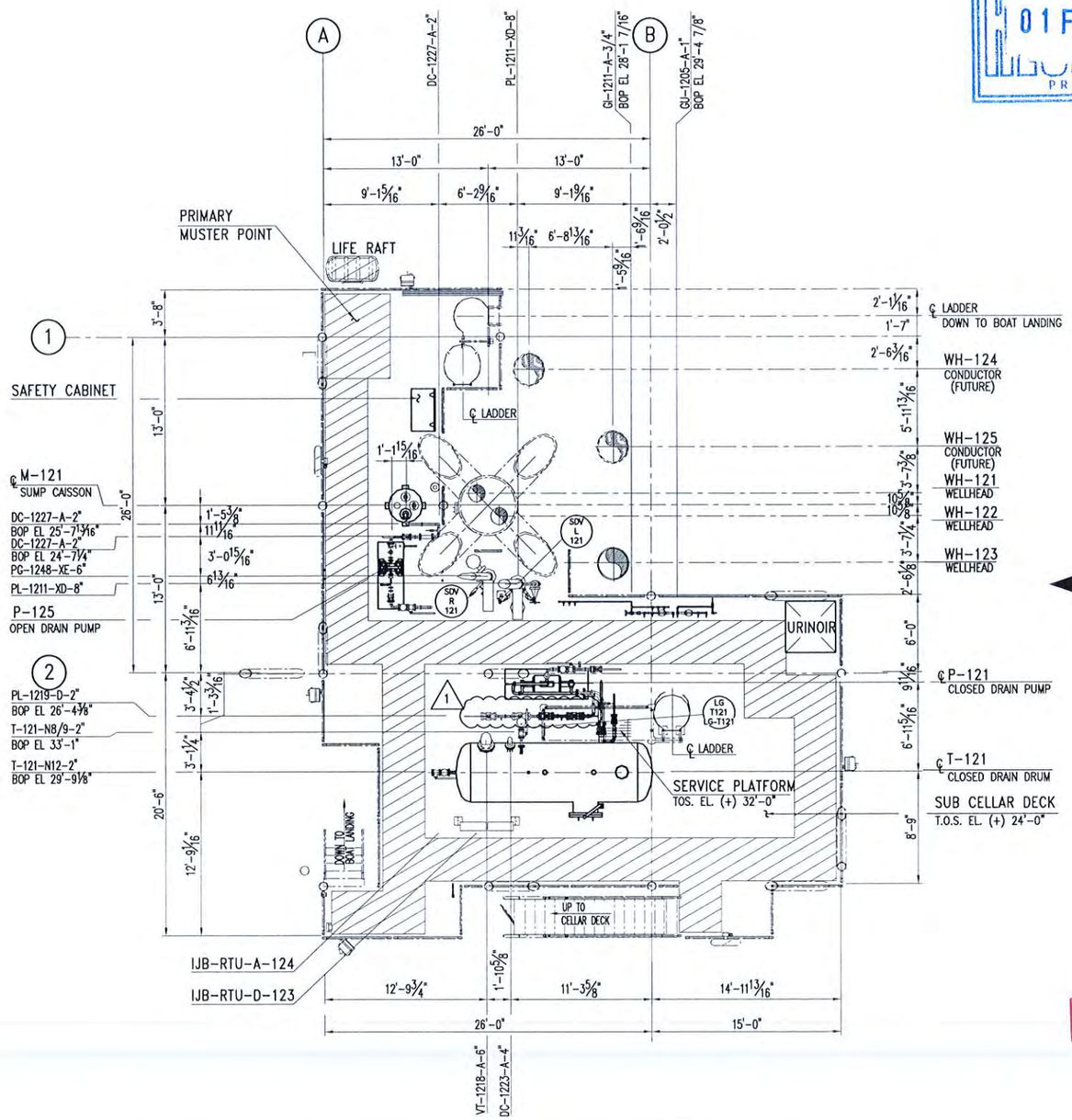

ABOVE SUBCELLAR DECK
EL. 24'-0" ~ 33'-9 29/32"

PERTAMINA HULU ENERGI WMO
APPROVED
01 FEB 2016
PROJECT

APPROVED FOR CONSTRUCTION

KEY – ELEVATION

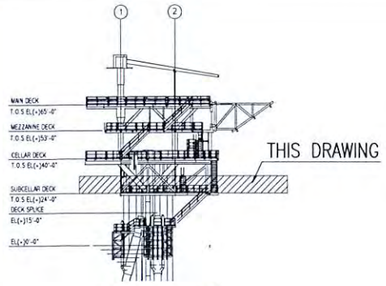

LOOKING EAST

LEGEND

- GRATING
- PLATE
- ESCAPE ROUTE
- MUSTER POINT

0 5 10 FEET
GRAPHIC SCALE

REFERENCE DRAWING NO	DESCRIPTION
PHEWMO-PHE12-X-PPD-5008	PIPING LAYOUT BELOW SUBCELLAR DECK PHE 12
PHEWMO-PHE12-X-PPD-5006	PIPING LAYOUT BELOW CELLAR DECK PHE 12
PHEWMO-PHE12-X-EQL-5004	EQUIPMENT LAYOUT SUB CELLAR DECK AND BOAT LANDING PHE-12 WELL PLATFORM

NOTE

1. ALL DIMENSIONS ARE IN FEET & INCHES UNLESS OTHERWISE NOTED.

CONTRACT NO. 189A/TS/OPS/13

REVISIONS

REV	BY	DATE	DESCRIPTION	PRE'D	CHK'D	APP'D
1	AND	28-JAN-2016	RE-APPROVED FOR CONSTRUCTION	STR	AGW/AW	JH/AHR
0	WH	29-DEC-2015	APPROVED FOR CONSTRUCTION	STR	AGW/AW	JH/AHR
C	TRI	18-DEC-2015	RE-ISSUED FOR APPROVAL	STR	AGW/AW	JH/AHR
B	AND	30-NOV-2015	ISSUED FOR APPROVAL	STR	AGW/AW	JH/AHR
A	HER	20-OCT-2015	ISSUED FOR REVIEW	STR	AGW/AW	JH/AHR

REF. NO.

ENGINEERING APPROVAL	BY	DATE
PROCESS		
ELECTRICAL		
INSTRUMENT		
STRUCTURAL		
MECHANICAL		
PIPING		
PIPELINE		
PROCESS SAFETY		

PHE WMO APP'D
DATE:
CONTRACTOR APP'D
DATE: 01/2/2016

PROJECT TITLE : EPCI-1 : PHE-12, PHE-24, AND CPP2 PLATFORM AND PIPELINE

PERTAMINA PHE WMO
CONSORTIUM
PT. TIMAS SUPLINDO PT. GUNANUSA UTAMA FABRICATORS

PIPING LAYOUT
ABOVE SUBCELLAR DECK
PHE 12

SCALE	DOCUMENT No	SHEET		REV.
3/16"=1'-0"	PHEWMO-PHE12-X-PPD-5007	1 OF 1		1

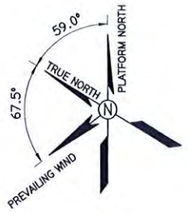

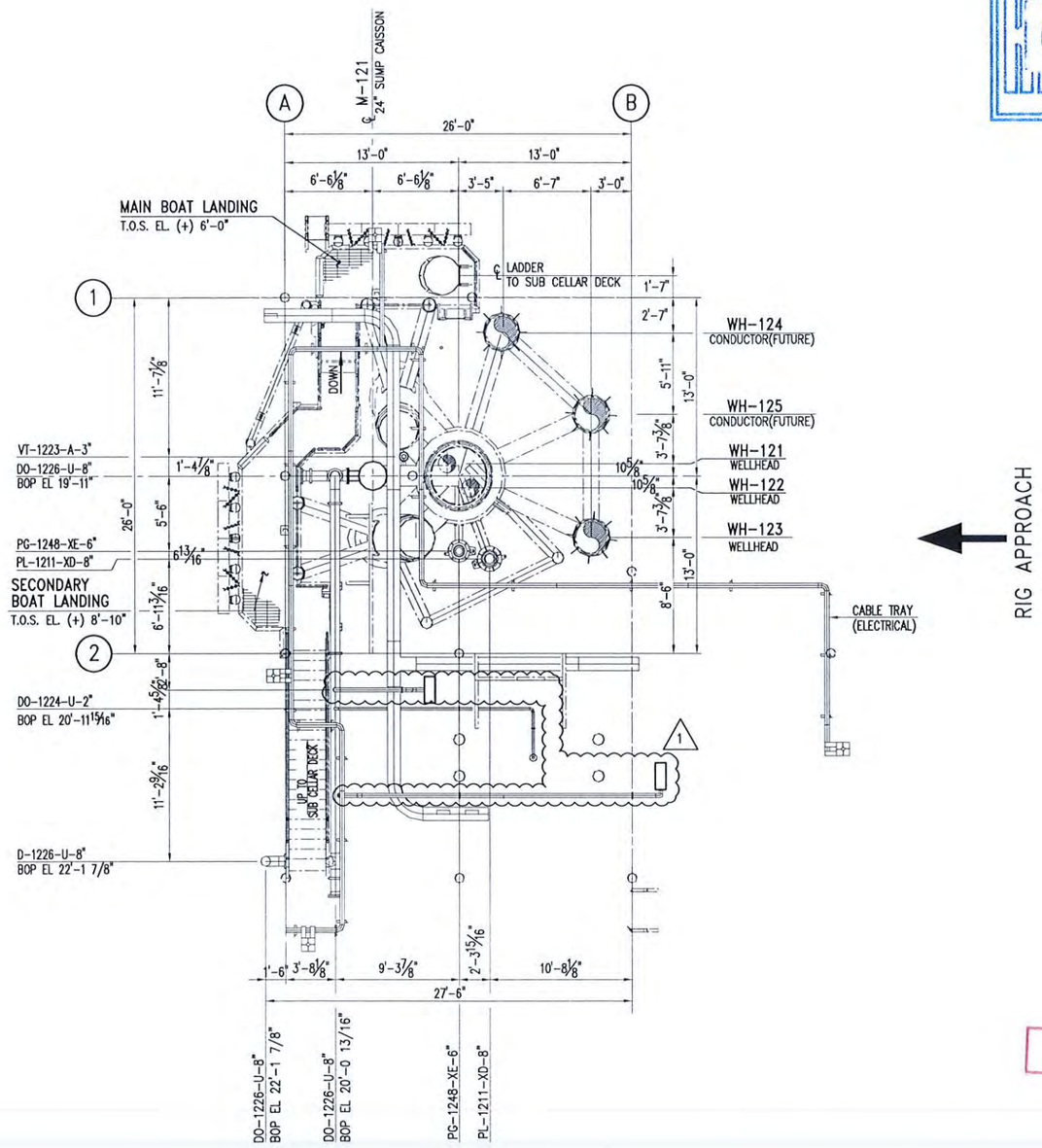

ABOVE BOAT LANDING

EL. 0'-0" ~ 24'-0"

PERTAMINA HULU ENERGI WMO
RECEIVED
01 FEB 2016
PROJECT

APPROVED FOR CONSTRUCTION

KEY – ELEVATION

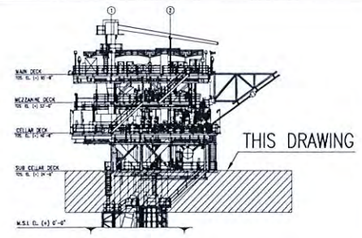

LOOKING EAST

LEGEND

- GRATING
- PLATE
- ESCAPE ROUTE
- MUSTER POINT

0 5 10 FEET
GRAPHIC SCALE

REFERENCE DRAWING NO	DESCRIPTION
PHEWMO-PHE12-X-PPD-5007	PIPING LAYOUT SUBCELLAR DECK PHE 12
PHEWMO-PHE12-X-EQL-5004	EQUIPMENT LAYOUT SUB CELLAR DECK AND BOAT LANDING PHE-12 WELL PLATFORM

NOTE

1. ALL DIMENSIONS ARE IN FEET & INCHES UNLESS OTHERWISE NOTED.

CONTRACT NO. 189A/TS/CPS/13

REVISIONS

REV	BY	DATE	DESCRIPTION	PRE'D	CHK'D	APP'D
1	AND	28-JAN-2016	RE-APPROVED FOR CONSTRUCTION	STR	AGW/AW	JH/AHR
0	WH	29-DEC-2015	APPROVED FOR CONSTRUCTION	STR	AGW/AW	JH/AHR
C	TRI	18-DEC-2015	RE-ISSUED FOR APPROVAL	STR	AGW/AW	JH/AHR
B	AND	30-NOV-2015	ISSUED FOR APPROVAL	STR	AGW/AW	JH/AHR
A	HER	20-OCT-2015	ISSUED FOR REVIEW	STR	AGW/AW	JH/AHR

REF. NO.

ENGINEERING APPROVAL	BY	DATE
PROCESS		
ELECTRICAL		
INSTRUMENT		
STRUCTURAL		
MECHANICAL		
PIPING		05 Feb 16
PIPELINE		
PROCESS SAFETY		

PHE WMO APP'D
DATE:
CONTRACTOR APP'D
DATE: 01/2/2016

PROJECT TITLE : EPCI-1 : PHE-12, PHE-24, AND CPP2 PLATFORM AND PIPELINE

PERTAMINA PHE WMO

CONSORTIUM

PT. TIMAS SUPLINDO PT. GUNANUSA UTAMA FABRICATORS

PIPING LAYOUT
ABOVE BOAT LANDING
PHE 12

SCALE	DOCUMENT No	SHEET			REV.
3/16"=1'-0"	PHEWMO-PHE12-X-PPD-5008	1	OF	1	1

Perhitungan Keandalan Member 403-402

No	Rng1	σ_{xx}	RNG2	σ_{yy}	RNG3	σ_{zz}	RNG4	σ_{xz}	RNG5	σ_{zy}	RNG6	$\sigma_{ultimate}$	σvm	z	Event
1	0,766	60,935	0,6806	1,3233	0,97	1,612	0,8448	0,261	0,3509	0,195	0,415	62,905	59,47	1,058	Handal
2	0,978	80,303	0,23	0,9029	0,011	0,326	0,5563	0,209	0,8742	0,296	0,994	89,568	79,692	1,124	Handal
3	0,838	64,82	0,0962	0,7064	0,244	0,816	0,6153	0,218	0,208	0,166	0,551	66,238	64,061	1,034	Handal
4	0,61	54,236	0,0742	0,6571	0,914	1,452	0,2048	0,151	0,8569	0,29	0,748	71,513	53,189	1,345	Handal
5	0,501	50,08	0,8664	1,5461	0,855	1,357	0,8153	0,254	0,3912	0,202	0,673	69,375	48,632	1,427	Handal
6	0,399	46,18	0,6677	1,3109	0,102	0,637	0,9654	0,309	0,9156	0,311	0,55	66,218	45,216	1,464	Handal
7	0,084	29,354	0,876	1,562	0,104	0,642	0,4561	0,193	0,2437	0,174	0,13	54,016	28,267	1,911	Handal
8	0,952	75,103	0,4358	1,1038	0,736	1,225	0,0172	0,073	0,0298	0,096	0,128	53,904	73,938	0,729	Gagal
9	0,261	40,412	0,9504	1,7337	0,032	0,459	0,9068	0,279	0,4421	0,21	0,966	82,769	39,336	2,104	Handal
10	0,278	41,197	0,7594	1,4051	0,508	1,036	0,3349	0,174	0,1399	0,149	0,855	75,327	39,979	1,884	Handal
11	0,163	35,267	0,2958	0,9733	0,87	1,378	0,9939	0,351	0,2679	0,179	0,603	67,541	34,1	1,981	Handal
12	0,572	52,76	0,6487	1,2929	0,593	1,103	0,0772	0,115	0,4398	0,21	0,16	55,324	51,564	1,073	Handal
13	0,598	53,783	0,239	0,9131	0,078	0,591	0,8292	0,257	0,4174	0,206	0,238	58,056	53,035	1,095	Handal
14	0,445	47,962	0,8088	1,464	0,109	0,65	0,5431	0,206	0,7637	0,267	0,038	47,658	46,914	1,016	Handal
15	0,787	61,984	0,993	2,0148	0,481	1,015	0,933	0,29	0,8357	0,284	0,687	69,742	60,479	1,153	Handal
16	0,637	55,301	0,9206	1,6505	0,369	0,926	0,377	0,181	0,7237	0,259	0,511	65,262	54,019	1,208	Handal
17	0,504	50,192	0,0964	0,7068	0,997	1,87	0,3085	0,17	0,9405	0,323	0,613	67,812	48,919	1,386	Handal
18	0,55	51,909	0,2983	0,9758	0,864	1,37	0,1948	0,148	0,2797	0,181	0,948	80,884	50,739	1,594	Handal
19	0,949	74,608	0,0912	0,696	0,935	1,499	0,8709	0,268	0,7276	0,26	0,016	44,148	73,517	0,601	Gagal
20	0,225	38,722	0,669	1,3121	0,394	0,947	0,2876	0,166	0,471	0,215	0,76	71,878	37,596	1,912	Handal
…	…	…	…	…	…	…	…	…	…	…	…	…	…	…	…
1000	0,75	60,158	0,4413	1,1086	0,348	0,91	0,2381	0,157	0,2239	0,17	0,416	62,931	59,15	1,064	Handal

Perhitungan Keandalan Member 102-292

No	Rng1	σ_{xx}	RNG2	σ_{yy}	RNG3	σ_{zz}	RNG4	σ_{xz}	RNG5	σ_{zy}	RNG6	$\sigma_{ultimate}$	σvm	z	Event
1	0,179	0,9339	0,484	20,174	0,996	11,71	0,7486	4,54	0,5525	16,21	0,15	54,895	33,597	1,634	Handal
2	0,636	1,4249	0,4965	20,366	0,282	5,361	0,1429	2,569	0,4757	15,3	0,631	68,267	31,972	2,135	Handal
3	0,721	1,5171	0,6668	23,061	0,183	4,725	0,9386	5,53	0,4822	15,38	0,419	63,001	34,739	1,814	Handal
4	0,516	1,3054	0,1191	13,194	0,813	8,207	0,5587	3,947	0,1183	10,06	0,566	66,632	21,377	3,117	Handal
5	0,244	1,0213	0,5718	21,529	0,315	5,543	0,7938	4,71	0,224	12,04	0,306	60,062	29,152	2,06	Handal
6	4E-04	-0,019	0,8239	26,119	0,286	5,383	0,532	3,871	0,9368	22,74	0,065	50,268	46,551	1,08	Handal
7	0,039	0,6101	0,6911	23,476	0,669	7,328	0,8316	4,869	0,6975	18,01	0,839	74,659	38,19	1,955	Handal
8	0,511	1,3008	0,0935	12,335	0,166	4,593	0,6698	4,278	0,4648	15,18	0,079	51,223	29,021	1,765	Handal
9	0,36	1,1512	0,7387	24,337	0,235	5,075	0,9849	6,239	0,5805	16,54	0,931	79,459	37,41	2,124	Handal
10	0,816	1,6386	0,5535	21,244	0,288	5,39	0,0781	2,172	0,018	5,784	0,509	65,229	20,962	3,112	Handal
11	0,699	1,4913	0,3773	18,505	0,587	6,905	0,4026	3,5	0,2303	12,14	0,802	73,286	26,562	2,759	Handal
12	0,466	1,2573	0,2516	16,318	0,962	9,936	0,9744	5,992	0,4457	14,95	0,072	50,733	30,819	1,646	Handal
13	0,895	1,775	0,3421	17,929	0,03	2,826	0,3572	3,365	0,534	15,99	0,827	74,192	32,341	2,294	Handal
14	0,507	1,2972	0,0582	10,804	0,372	5,843	0,3878	3,457	0,4656	15,19	0,878	76,35	28,205	2,707	Handal
15	0,714	1,5082	0,4513	19,671	0,928	9,315	0,3766	3,423	0,355	13,85	0,395	62,411	29,322	2,129	Handal
16	0,987	2,1486	0,3323	17,763	0,344	5,697	0,7171	4,431	0,6116	16,92	0,392	62,322	33,441	1,864	Handal
17	0,366	1,1575	0,7392	24,346	0,334	5,646	0,6721	4,286	0,5298	15,94	0,172	55,774	35,652	1,564	Handal
18	0,739	1,5379	0,7468	24,491	0,233	5,065	0,6097	4,096	0,3307	13,54	0,618	67,938	32,539	2,088	Handal
19	0,392	1,1841	0,7761	25,071	0,804	8,147	0,473	3,703	0,1831	11,36	0,478	64,466	29,687	2,172	Handal
20	0,608	1,3961	0,8567	26,947	0,939	9,483	0,5596	3,95	0,9268	22,38	0,198	56,722	45,401	1,249	Handal
…	…	…	…	…	…	…	…	…	…	…	…	…	…	…	…
1000	0,048	0,6449	0,6218	22,32	0,691	7,451	0,252	3,022	0,8975	21,52	0,898	77,37	42,251	1,831	Handal

Perhitungan Keandalan Member 392-492

No	Rng1	σ_{xx}	RNG2	σ_{yy}	RNG3	σ_{zz}	RNG4	σ_{xz}	RNG5	σ_{zy}	RNG6	$\sigma_{ultimate}$	σvm	z	Event
1	0,232	12,663	0,7241	41,2	0,731	8,353	0,0515	0,286	0,8966	2,454	0,892	77,072	31,213	2,469	Handal
2	0,395	14,924	0,0676	19,29	0,754	8,504	0,1712	0,401	0,3639	1,594	0,33	60,708	9,8184	6,183	Handal
3	0,078	9,3313	0,1136	22,295	0,324	6,085	0,0822	0,326	0,6466	1,981	0,045	48,477	15,256	3,177	Handal
4	0,956	24,546	0,4646	34,028	0,295	5,908	0,6211	0,612	0,0641	0,968	0,595	67,349	24,858	2,709	Handal
5	0,644	18,017	0,5088	35,191	0,288	5,866	0,3697	0,504	0,3674	1,599	0,601	67,496	25,685	2,628	Handal
6	0,48	15,97	0,2753	28,7	0,317	6,045	0,601	0,603	0,4942	1,772	0,617	67,912	19,936	3,407	Handal
7	0,737	19,304	0,1612	24,581	0,918	9,999	0,7846	0,692	0,1042	1,108	0,235	57,972	12,987	4,464	Handal
8	0,274	13,301	0,482	34,486	0,131	4,681	0,51	0,564	0,9367	2,596	0,968	83,086	26,96	3,082	Handal
9	0,161	11,408	0,1041	21,76	0,863	9,365	0,315	0,479	0,9697	2,782	0,273	59,116	12,506	4,727	Handal
10	0,292	13,558	0,3041	29,585	0,753	8,498	0,1144	0,358	0,0121	0,577	0,136	54,279	19,103	2,841	Handal
11	0,677	18,448	0,8778	47,171	0,879	9,52	0,273	0,459	0,3345	1,552	0,212	57,212	34,19	1,673	Handal
12	0,502	16,246	0,4272	33,035	0,556	7,345	0,6945	0,645	0,1412	1,206	0,453	63,84	22,719	2,81	Handal
13	0,182	11,794	0,0674	19,279	0,826	9,035	0,3635	0,501	0,7033	2,065	0,587	67,152	9,8912	6,789	Handal
14	0,134	10,837	0,0488	17,584	0,876	9,493	0,2376	0,44	0,8102	2,249	0,061	49,918	8,494	5,877	Handal
15	0,056	8,5052	0,898	48,284	0,975	11,18	0,3313	0,487	0,9624	2,73	0,657	68,941	38,807	1,777	Handal
16	0,285	13,454	0,7827	43,155	0,773	8,632	0,1716	0,401	0,9567	2,695	0,285	59,474	32,724	1,817	Handal
17	0,027	6,8796	0,1158	22,412	0,333	6,135	0,2219	0,431	0,5672	1,87	0,514	65,343	16,261	4,018	Handal
18	0,747	19,463	0,544	36,12	0,952	10,57	0,0701	0,312	0,0912	1,068	0,874	76,146	22,548	3,377	Handal
19	0,901	22,488	0,4914	34,733	0,736	8,384	0,6109	0,607	0,572	1,877	0,068	50,432	23,092	2,184	Handal
20	0,199	12,1	0,4668	34,086	0,369	6,344	0,1099	0,354	0,3541	1,58	0,852	75,208	25,513	2,948	Handal
…	…	…	…	…	…	…	…	…	…	…	…	…	…	…	…
1000	0,655	18,159	0,251	27,92	0,889	9,631	0,1748	0,403	0,3645	1,595	0,927	79,153	16,105	4,915	Handal

Perhitungan Keandalan Member 792-802

No	Rng1	σ_{xx}	RNG2	σ_{yy}	RNG3	σ_{zz}	RNG4	σ_{xz}	RNG5	σ_{zy}	RNG6	$\sigma_{ultimate}$	σvm	z	Event
1	0,649	9,9082	0,5495	44,179	0,483	30,43	0,0295	4,759	0,6945	19,67	0,816	73,76	46,06	1,601	Handal
2	0,511	8,9623	0,4296	40,323	0,299	25,95	0,9861	18,23	0,5811	18,12	0,89	76,983	52,161	1,476	Handal
3	0,632	9,7927	0,507	42,813	0,91	43,24	0,3672	9,863	0,6029	18,41	0,295	59,743	49,119	1,216	Handal
4	0,819	11,322	0,6004	45,841	0,564	32,31	0,1906	8,095	0,8239	21,83	0,438	63,488	50,342	1,261	Handal
5	0,097	5,4274	0,1372	28,623	0,655	34,51	0,631	12,08	0,022	6,754	0,547	66,149	35,832	1,846	Handal
6	0,188	6,5244	0,7791	52,419	0,563	32,29	0,3587	9,788	0,4652	16,62	0,607	67,647	52,001	1,301	Handal
7	0,811	11,242	0,4476	40,908	0,486	30,5	0,5945	11,77	0,814	21,64	0,885	76,724	50,003	1,534	Handal
8	0,781	10,96	0,9685	66,349	0,906	43,02	0,1167	7,055	0,048	8,547	0,406	62,679	51,85	1,209	Handal
9	0,699	10,279	0,9958	76,266	0,565	32,33	0,372	9,904	0,9563	25,82	0,342	61,035	75,369	0,81	Gagal
10	0,937	12,978	0,513	43,007	0,522	31,32	0,4991	10,97	0,8932	23,44	0,635	68,376	51,931	1,317	Handal
11	0,764	10,812	0,0176	15,687	0,642	34,19	0,4673	10,71	0,4698	16,68	0,362	61,547	40,439	1,522	Handal
12	0,13	5,8888	0,885	57,925	0,487	30,52	0,5466	11,37	0,4805	16,82	0,581	66,983	57,175	1,172	Handal
13	0,907	12,414	0,8963	58,702	0,491	30,6	0,6388	12,15	0,3935	15,69	0,202	56,872	53,033	1,072	Handal
14	0,557	9,2715	0,121	27,644	0,294	25,81	0,2533	8,793	0,4381	16,27	0,572	66,769	36,517	1,828	Handal
15	0,348	7,8446	0,6205	46,51	0,858	40,71	0,1959	8,159	0,4036	15,82	0,455	63,901	47,488	1,346	Handal
16	0,255	7,1354	0,1519	29,453	0,097	18,83	0,4715	10,74	0,2493	13,6	0,033	47,083	35,713	1,318	Handal
17	0,789	11,032	0,7029	49,398	0,903	42,83	0,2614	8,876	0,4019	15,8	0,231	57,812	47,413	1,219	Handal
18	0,486	8,7954	0,2727	34,863	0,221	23,71	0,9506	16,42	0,4986	17,05	0,141	54,524	46,84	1,164	Handal
19	0,654	9,9456	0,0264	17,842	0,024	12,54	0,6943	12,65	0,0279	7,275	0,899	77,442	26,225	2,953	Handal
20	0,448	8,5405	0,6394	47,148	0,709	35,92	0,275	9,011	0,4442	16,35	0,833	74,413	47,211	1,576	Handal
…	…	…	…	…	…	…	…	…	…	…	…	…	…	…	…
1000	0,779	10,943	0,3922	39,095	0,226	23,85	0,9446	16,23	0,2345	13,36	0,299	59,853	43,839	1,365	Handal

Perhitungan Keandalan Member 702-802

No	Rng1	σ_{xx}	RNG2	σ_{yy}	RNG3	σ_{zz}	RNG4	σ_{xz}	RNG5	σ_{zy}	RNG6	$\sigma_{ultimate}$	σvm	z	Event
1	0,621	9,5909	0,1321	27,239	0,463	34,15	0,5971	14,79	0,5335	17,7	0,387	62,196	45,566	1,365	Handal
2	0,336	7,6644	0,4525	39,493	0,763	42,67	0,2534	11,03	0,4262	16,3	0,596	67,379	47,812	1,409	Handal
3	0,061	4,7116	0,5284	41,835	0,135	23,51	0,6725	15,62	0,2125	13,13	0,897	77,333	47,773	1,619	Handal
4	0,283	7,2693	0,1483	28,136	0,083	20,5	0,4996	13,77	0,1554	12,01	0,023	45,464	36,548	1,244	Handal
5	0,624	9,6119	0,463	39,817	0,654	39,29	0,3026	11,63	0,5286	17,63	0,151	54,953	47,279	1,162	Handal
6	0,074	4,964	0,436	38,981	0,83	45,18	0,7683	16,8	0,9607	26,37	0,156	55,134	65,869	0,837	Gagal
7	0,949	13,095	0,3705	36,898	0,689	40,3	0,1623	9,701	0,5698	18,17	0,563	66,557	43,954	1,514	Handal
8	0,857	11,589	0,1286	27,039	0,068	19,39	0,0271	5,817	0,2608	13,94	0,325	60,586	29,388	2,062	Handal
9	0,637	9,7037	0,5134	41,373	0,291	29,31	0,1138	8,785	0,7806	21,27	0,206	57,015	48,529	1,175	Handal
10	0,813	11,124	0,6779	46,636	0,993	60,96	0,2572	11,08	0,8634	22,93	0,752	71,625	62,619	1,144	Handal
11	0,734	10,426	0,7138	47,897	0,127	23,09	0,9195	19,56	0,2961	14,49	0,386	62,18	53,549	1,161	Handal
12	0,513	8,8659	0,6005	44,088	0,212	26,69	0,2009	10,31	0,2915	14,42	0,555	66,343	43,275	1,533	Handal
13	0,778	10,795	0,2197	31,459	0,665	39,61	0,7275	16,27	0,8206	22,01	0,52	65,5	53,938	1,214	Handal
14	0,066	4,8041	0,7414	48,918	0,55	36,44	0,2823	11,39	0,3912	15,83	0,619	67,95	51,886	1,31	Handal
15	0,876	11,82	0,3973	37,761	0,845	45,8	0,4049	12,78	0,8038	21,69	0,633	68,309	53,359	1,28	Handal
16	0,808	11,072	0,7717	50,107	0,603	37,87	0,656	15,43	0,5586	18,02	0,826	74,156	53,707	1,381	Handal
17	0,305	7,4336	0,3638	36,68	0,418	32,93	0,9548	20,77	0,2651	14,01	0,008	41,566	51,402	0,809	Gagal
18	0,119	5,6758	0,9102	57,452	0,615	38,2	0,1307	9,13	0,3617	15,43	0,074	50,928	54,942	0,927	Gagal
19	0,072	4,9239	0,8773	55,236	0,711	40,99	0,541	14,2	0,7527	20,8	0,737	71,188	62,606	1,137	Handal
20	0,901	12,171	0,9173	58,001	0,591	37,55	0,8921	18,88	0,4452	16,55	0,666	69,193	58,929	1,174	Handal
…	…	…	…	…	…	…	…	…	…	…	…	…	…	…	…
1000	0,958	13,341	0,1829	29,849	0,378	31,85	0,1245	9,008	0,5406	17,79	0,285	59,461	38,756	1,534	Handal

Perhitungan Keandalan Member 302-402

No	Rng1	σ_{xx}	RNG2	σ_{yy}	RNG3	σ_{zz}	RNG4	σ_{xz}	RNG5	σ_{zy}	RNG6	$\sigma_{ultimate}$	σvm	z	Event
1	0,731	61,533	0,3128	0,9049	0,438	0,743	0,6124	0,347	0,7227	0,553	0,097	52,33	60,72	0,862	Gagal
2	0,333	45,235	0,6455	1,1787	0,712	0,911	0,8618	0,424	0,1264	0,309	0,137	54,324	44,2	1,229	Handal
3	0,305	43,994	0,0867	0,627	0,29	0,651	0,1097	0,202	0,0783	0,27	0,363	61,585	43,359	1,42	Handal
4	0,708	60,479	0,452	1,0217	0,194	0,578	0,4954	0,319	0,7979	0,588	0,288	59,559	59,692	0,998	Gagal
5	0,828	66,71	0,8756	1,4267	0,767	0,95	0,1486	0,22	0,454	0,454	0,488	64,701	65,529	0,987	Gagal
6	0,68	59,232	0,1469	0,7261	0,706	0,906	0,0478	0,16	0,5417	0,485	0,87	75,994	58,423	1,301	Handal
7	0,153	36,008	0,467	1,0336	0,49	0,774	0,5995	0,344	0,6793	0,536	0,299	59,846	35,122	1,704	Handal
8	0,469	50,755	0,0246	0,4346	0,825	0,999	0,2295	0,249	0,5714	0,495	0,871	76,014	50,05	1,519	Handal
9	0,371	46,824	0,929	1,5269	0,167	0,554	0,5982	0,344	0,159	0,329	0,391	62,302	45,798	1,36	Handal
10	0,847	67,91	0,9618	1,6235	0,396	0,718	0,1328	0,213	0,9815	0,764	0,116	53,369	66,758	0,799	Gagal
11	0,453	50,113	0,7136	1,2393	0,481	0,769	0,3286	0,277	0,404	0,436	0,462	64,066	49,118	1,304	Handal
12	0,818	66,109	0,8828	1,4381	0,439	0,744	0,4589	0,31	0,3875	0,43	0,576	66,87	65,027	1,028	Handal
13	0,54	53,524	0,0624	0,5719	0,794	0,972	0,5874	0,341	0,5648	0,493	0,031	46,791	52,764	0,887	Gagal
14	0,778	63,886	0,5725	1,1182	0,703	0,905	0,1859	0,234	0,1042	0,293	0,707	70,303	62,878	1,118	Handal
15	0,418	48,72	0,2228	0,8174	0,976	1,241	0,9851	0,528	0,7756	0,577	0,204	56,926	47,711	1,193	Handal
16	0,498	51,866	0,5994	1,14	0,404	0,723	0,5012	0,32	0,3815	0,427	0,326	60,616	50,945	1,19	Handal
17	0,281	42,896	0,4518	1,0215	0,356	0,693	0,845	0,417	0,6351	0,519	0,161	55,358	42,055	1,316	Handal
18	0,629	57,074	0,3515	0,9388	0,14	0,528	0,9703	0,501	0,847	0,614	0,273	59,111	56,359	1,049	Handal
19	0,609	56,265	0,5044	1,0635	0,477	0,767	0,7715	0,391	0,834	0,607	0,773	72,29	55,364	1,306	Handal
20	0,841	67,495	0,9421	1,5601	0,545	0,807	0,418	0,3	0,2907	0,392	0,6	67,467	66,32	1,017	Handal
…	…	…	…	…	…	…	…	…	…	…	…	…	…	…	…
1000	0,959	79,112	0,5851	1,1284	0,651	0,871	0,7699	0,391	0,9363	0,685	0,606	67,613	78,124	0,865	Gagal

LAMPIRAN 3

SACS INPUT UNTUK PEMBEBABANAN *EQUIPMENT* DAN *LIVE LOAD*

```
LOADCN   1
DEAD
DEAD      -Z         185.570                M
LOADCN   2
DEAD
DEAD      -Z         193.610                M
LOADCN   3
DEAD
DEAD      -Z         183.930                M
LOADCN   4
DEAD
DEAD      -Z         195.250                M
LOADCN   5
DEAD
DEAD      -Z         190.000                M
LOADCN 105
LOAD Z 40954115        -0.0330       -0.0330                GLOB UNIF   MD-HANDR
LOAD Z 41154133        -0.0330       -0.0330                GLOB UNIF   MD-HANDR
LOAD Z 41334146        -0.0330       -0.0330                GLOB UNIF   MD-HANDR
LOAD Z 41464169        -0.0330       -0.0330                GLOB UNIF   MD-HANDR
LOAD Z 41694190        -0.0330       -0.0330                GLOB UNIF   MD-HANDR
LOAD Z 41904191        -0.0330       -0.0330                GLOB UNIF   MD-HANDR
LOAD Z 41914192        -0.0330       -0.0330                GLOB UNIF   MD-HANDR
LOAD Z 41924193        -0.0330       -0.0330                GLOB UNIF   MD-HANDR
LOAD Z 42064207        -0.0330       -0.0330                GLOB UNIF   MD-HANDR
LOAD Z 42074208        -0.0330       -0.0330                GLOB UNIF   MD-HANDR
LOAD Z 41894209        -0.0330       -0.0330                GLOB UNIF   MD-HANDR
LOAD Z 42084209        -0.0330       -0.0330                GLOB UNIF   MD-HANDR
LOAD Z 41874188        -0.0330       -0.0330                GLOB UNIF   MD-HANDR
LOAD Z 41684189        -0.0330       -0.0330                GLOB UNIF   MD-HANDR
LOAD Z 40604094        -0.0330       -0.0330                GLOB UNIF   MD-HANDR
LOAD Z 40304060        -0.0330       -0.0330                GLOB UNIF   MD-HANDR
LOAD Z 40294030        -0.0330       -0.0330                GLOB UNIF   MD-HANDR
LOAD Z 40284029        -0.0330       -0.0330                GLOB UNIF   MD-HANDR
LOAD Z 40274028        -0.0330       -0.0330                GLOB UNIF   MD-HANDR
LOAD Z 40264027        -0.0330       -0.0330                GLOB UNIF   MD-HANDR
LOAD Z 40254026        -0.0330       -0.0330                GLOB UNIF   MD-HANDR
LOAD Z 40244025        -0.0330       -0.0330                GLOB UNIF   MD-HANDR
LOAD Z 40234024        -0.0330       -0.0330                GLOB UNIF   MD-HANDR
LOAD Z 40224023        -0.0330       -0.0330                GLOB UNIF   MD-HANDR
LOAD Z 40214022        -0.0330       -0.0330                GLOB UNIF   MD-HANDR
LOAD Z 40204021        -0.0330       -0.0330                GLOB UNIF   MD-HANDR
LOAD Z 40194020        -0.0330       -0.0330                GLOB UNIF   MD-HANDR
LOAD Z 40184019        -0.0330       -0.0330                GLOB UNIF   MD-HANDR
LOAD Z 40174018        -0.0330       -0.0330                GLOB UNIF   MD-HANDR
LOAD Z 40164017        -0.0330       -0.0330                GLOB UNIF   MD-HANDR
LOAD Z 40154016        -0.0330       -0.0330                GLOB UNIF   MD-HANDR
LOAD Z 40154045        -0.0330       -0.0330                GLOB UNIF   MD-HANDR
LOAD Z 40464073        -0.0330       -0.0330                GLOB UNIF   MD-HANDR
LOAD Z 40734096        -0.0330       -0.0330                GLOB UNIF   MD-HANDR
*
***LDS1**    -22.000    13.000    53.000   -22.000    21.000    53.000   -22.000
***LDS2**     13.000    53.000   -22.000    21.000    53.000    -0.011    -0.011
***LDS3**      1.000  50   3   3   0   1105   -2EQUPPRESMZ-GRATT
LOAD Z 30033142        -0.0407       -0.0407                GLOB UNIF   MZ-GRATT
LOAD Z 30043150        -0.0409       -0.0409                GLOB UNIF   MZ-GRATT
LOAD Z 31293145        -0.0373       -0.0373                GLOB UNIF   MZ-GRATT
LOAD Z 31333148        -0.0385       -0.0385                GLOB UNIF   MZ-GRATT
LOAD Z 31253141        -0.0343       -0.0343                GLOB UNIF   MZ-GRATT
LOAD Z 31243140        -0.0515       -0.0515                GLOB UNIF   MZ-GRATT
LOAD Z 31273143        -0.0343       -0.0343                GLOB UNIF   MZ-GRATT
LOAD Z 31283144        -0.0343       -0.0343                GLOB UNIF   MZ-GRATT
LOAD Z 31303146        -0.0404       -0.0404                GLOB UNIF   MZ-GRATT
LOAD Z 31323147        -0.0404       -0.0404                GLOB UNIF   MZ-GRATT
LOAD Z 31343149        -0.0367       -0.0367                GLOB UNIF   MZ-GRATT
LOAD Z 31363151        -0.0325       -0.0325                GLOB UNIF   MZ-GRATT
LOAD Z 31373152        -0.0486       -0.0486                GLOB UNIF   MZ-GRATT
*
***LDS1**    -22.000     7.500    53.000   -22.000    13.000    53.000   -22.000
***LDS2**      7.500    53.000   -22.000    13.000    53.000    -0.011    -0.011
```

```
***LDS3**      1.000  50   3   3   0   1105   -2EQUPPRESMZ-GRATT
LOAD Z 31093003        -0.0343       -0.0343                GLOB UNIF   MZ-GRATT
LOAD Z 31183004        -0.0345       -0.0345                GLOB UNIF   MZ-GRATT
LOAD Z 31143131        -0.0605       -0.0605                GLOB UNIF   MZ-GRATT
LOAD Z 31163133        -0.0560       -0.0560                GLOB UNIF   MZ-GRATT
LOAD Z 31123129        -0.0400       -0.0400                GLOB UNIF   MZ-GRATT
LOAD Z 31083125        -0.0343       -0.0343                GLOB UNIF   MZ-GRATT
LOAD Z 31073124        -0.0515       -0.0515                GLOB UNIF   MZ-GRATT
LOAD Z 31103127        -0.0343       -0.0343                GLOB UNIF   MZ-GRATT
LOAD Z 31113128        -0.0343       -0.0343                GLOB UNIF   MZ-GRATT
LOAD Z 31173134        -0.0367       -0.0367                GLOB UNIF   MZ-GRATT
LOAD Z 31193136        -0.0325       -0.0325                GLOB UNIF   MZ-GRATT
LOAD Z 31203137        -0.0486       -0.0486                GLOB UNIF   MZ-GRATT
*
***LDS1**    -19.000    -1.000    53.000   -19.000     7.500    53.000   -19.000
***LDS2**     -1.000    53.000   -19.000     7.500    53.000    -0.011    -0.011
***LDS3**      1.000  50   3   3   0   1105   -2EQUPRESMZ-GRATT
LOAD Z 30903091        -0.0172       -0.0172                GLOB UNIF   MZ-GRATT
LOAD Z 30913109        -0.0172       -0.0172                GLOB UNIF   MZ-GRATT
LOAD Z 30883107        -0.0172       -0.0172                GLOB UNIF   MZ-GRATT
LOAD Z 30893108        -0.0343       -0.0343                GLOB UNIF   MZ-GRATT
*
***LDS1**    -13.000              53.000   -13.000     7.500    53.000   -13.000
***LDS2**               53.000   -13.000     7.500    53.000    -0.011    -0.011
***LDS3**      1.000  50   3   3   0   1105   -2EQUPRESMZ-GRATT
LOAD Z 30913109        -0.0172       -0.0172                GLOB UNIF   MZ-GRATT
LOAD Z 30943101        -0.0172       -0.0172                GLOB UNIF   MZ-GRATT
LOAD Z 31013112        -0.0172       -0.0172                GLOB UNIF   MZ-GRATT
LOAD Z 30933111        -0.0343       -0.0343                GLOB UNIF   MZ-GRATT
LOAD Z 30923110        -0.0343       -0.0343                GLOB UNIF   MZ-GRATT
*
***LDS1**     -4.000     3.750    53.000    -4.000     7.500    53.000    -4.000
***LDS2**      3.750    53.000    -4.000     7.500    53.000    -0.011    -0.011
***LDS3**      1.000  50   3   3   0   1105   -2EQUPRESMZ-GRATT
LOAD Z 31013112        -0.0201       -0.0201                GLOB UNIF   MZ-GRATT
LOAD Z 31043116        -0.0201       -0.0201                GLOB UNIF   MZ-GRATT
LOAD Z 31023113        -0.0404       -0.0404                GLOB UNIF   MZ-GRATT
LOAD Z 31033115        -0.0404       -0.0404                GLOB UNIF   MZ-GRATT
*
***LDS1**      6.583              53.000     6.583     7.500    53.000     6.583
***LDS2**               53.000     6.583     7.500    53.000    -0.011    -0.011
***LDS3**      1.000  50   3   3   0   1105   -2EQUPRESMZ-GRATT
LOAD Z 30963118        -0.0529       -0.0529                GLOB UNIF   MZ-GRATT
LOAD Z 30953104        -0.0367       -0.0367                GLOB UNIF   MZ-GRATT
LOAD Z 31043116        -0.0367       -0.0367                GLOB UNIF   MZ-GRATT
LOAD Z 30973119        -0.0325       -0.0325                GLOB UNIF   MZ-GRATT
LOAD Z 30993120        -0.0486       -0.0486                GLOB UNIF   MZ-GRATT
*
***LDS1**     -4.000    -3.750    53.000    -4.000     3.750    53.000    -4.000
***LDS2**     -3.750    53.000    -4.000     3.750    53.000    -0.011    -0.011
***LDS3**      1.000  50   3   3   0   1105   -2EQUPRESMZ-GRATT
LOAD Z 30783094        -0.0605       -0.0605                GLOB UNIF   MZ-GRATT
LOAD Z 30813095        -0.0605       -0.0605                GLOB UNIF   MZ-GRATT
LOAD Z 30943101        -0.0605       -0.0605                GLOB UNIF   MZ-GRATT
LOAD Z 30953104        -0.0605       -0.0605                GLOB UNIF   MZ-GRATT
*
***LDS1**    -33.750    -7.500    53.000   -33.750    -1.000    53.000   -33.750
***LDS2**     -7.500    53.000   -33.750    -1.000    53.000    -0.011    -0.011
***LDS3**      1.000  50   3   3   0   1105   -2EQUPRESMZ-GRATT
LOAD Z 30583090        -0.0172       -0.0172                GLOB UNIF   MZ-GRATT
LOAD Z 30513083        -0.0504       -0.0504                GLOB UNIF   MZ-GRATT
LOAD Z 30533085        -0.0337       -0.0337                GLOB UNIF   MZ-GRATT
LOAD Z 30543086        -0.0508       -0.0508                GLOB UNIF   MZ-GRATT
LOAD Z 30563088        -0.0512       -0.0512                GLOB UNIF   MZ-GRATT
LOAD Z 30573089        -0.0343       -0.0343                GLOB UNIF   MZ-GRATT
*
***LDS1**    -13.000    -7.500    53.000   -13.000              53.000   -13.000
***LDS2**     -7.500    53.000   -13.000              53.000    -0.011    -0.011
***LDS3**      1.000  50   3   3   0   1105   -2EQUPRESMZ-GRATT
LOAD Z 30583090        -0.0172       -0.0172                GLOB UNIF   MZ-GRATT
```

```
LOAD Z 30903091        -0.0172       -0.0172                GLOB UNIF   MZ-GRATT
LOAD Z 30613078        -0.0172       -0.0172                GLOB UNIF   MZ-GRATT
LOAD Z 30783094        -0.0172       -0.0172                GLOB UNIF   MZ-GRATT
LOAD Z 30603093        -0.0343       -0.0343                GLOB UNIF   MZ-GRATT
LOAD Z 30593092        -0.0343       -0.0343                GLOB UNIF   MZ-GRATT
*
***LDS1**     -4.000    -7.500    53.000    -4.000    -3.750    53.000    -4.000
***LDS2**     -7.500    53.000    -4.000    -3.750    53.000    -0.011    -0.011
***LDS3**      1.000  50   3   3   0   1105   -2EQUPPRESMZ-GRATT
LOAD Z 30613078        -0.0201       -0.0201                GLOB UNIF   MZ-GRATT
LOAD Z 30663081        -0.0202       -0.0202                GLOB UNIF   MZ-GRATT
LOAD Z 30623079        -0.0404       -0.0404                GLOB UNIF   MZ-GRATT
LOAD Z 30643080        -0.0404       -0.0404                GLOB UNIF   MZ-GRATT
*
***LDS1**      6.580    -7.500    53.000     6.583              53.000     6.580
***LDS2**     -7.500    53.000     6.583             53.000    -0.011    -0.011
***LDS3**      1.000  50   3   3   0   1105   -2EQUPPRESMZ-GRATT
LOAD Z 30663081        -0.0367       -0.0367                GLOB UNIF   MZ-GRATT
LOAD Z 30813095        -0.0367       -0.0367                GLOB UNIF   MZ-GRATT
*
***LDS1**    -22.000   -13.000    53.000   -22.000    -7.500    53.000   -22.000
***LDS2**    -13.000    53.000   -22.000    -7.500    53.000    -0.011    -0.011
***LDS3**      1.000  50   3   3   0   1105   -2EQUPPRESMZ-GRATT
LOAD Z 30013058        -0.0444       -0.0444                GLOB UNIF   MZ-GRATT
LOAD Z 30023068        -0.0444       -0.0444                GLOB UNIF   MZ-GRATT
LOAD Z 30413061        -0.0400       -0.0400                GLOB UNIF   MZ-GRATT
LOAD Z 30433063        -0.0415       -0.0415                GLOB UNIF   MZ-GRATT
LOAD Z 30453066        -0.0372       -0.0372                GLOB UNIF   MZ-GRATT
LOAD Z 30343056        -0.0515       -0.0515                GLOB UNIF   MZ-GRATT
LOAD Z 30353057        -0.0343       -0.0343                GLOB UNIF   MZ-GRATT
LOAD Z 30373059        -0.0343       -0.0343                GLOB UNIF   MZ-GRATT
LOAD Z 30393060        -0.0343       -0.0343                GLOB UNIF   MZ-GRATT
LOAD Z 30443065        -0.0376       -0.0376                GLOB UNIF   MZ-GRATT
LOAD Z 30463067        -0.0367       -0.0367                GLOB UNIF   MZ-GRATT
LOAD Z 30483069        -0.0472       -0.0472                GLOB UNIF   MZ-GRATT
*
***LDS1**    -22.000   -21.000    53.000   -22.000   -13.000    53.000   -22.000
***LDS2**    -21.000    53.000   -22.000   -13.000    53.000    -0.011    -0.011
***LDS3**      1.000  50   3   3   0   1105   -2EQUPPRESMZ-GRATT
LOAD Z 30223001        -0.0358       -0.0358                GLOB UNIF   MZ-GRATT
LOAD Z 30303002        -0.0343       -0.0343                GLOB UNIF   MZ-GRATT
LOAD Z 30263043        -0.0372       -0.0372                GLOB UNIF   MZ-GRATT
LOAD Z 30273044        -0.0376       -0.0376                GLOB UNIF   MZ-GRATT
LOAD Z 30283045        -0.0372       -0.0372                GLOB UNIF   MZ-GRATT
LOAD Z 30293046        -0.0367       -0.0367                GLOB UNIF   MZ-GRATT
LOAD Z 30203034        -0.0515       -0.0515                GLOB UNIF   MZ-GRATT
LOAD Z 30213035        -0.0343       -0.0343                GLOB UNIF   MZ-GRATT
LOAD Z 30233038        -0.0372       -0.0372                GLOB UNIF   MZ-GRATT
LOAD Z 30243040        -0.0372       -0.0372                GLOB UNIF   MZ-GRATT
LOAD Z 30253042        -0.0372       -0.0372                GLOB UNIF   MZ-GRATT
LOAD Z 30313048        -0.0472       -0.0472                GLOB UNIF   MZ-GRATT
*
***LDS1**              -26.000    53.000             -21.000    53.000
***LDS2**    -26.000    53.000             -21.000    53.000    -0.011    -0.011
***LDS3**      1.000  50   3   3   0   1105   -2EQUPPRESMZ-GRATT
LOAD Z 30163030        -0.0343       -0.0343                GLOB UNIF   MZ-GRATT
LOAD Z 30123026        -0.0186       -0.0186                GLOB UNIF   MZ-GRATT
LOAD Z 30133027        -0.0376       -0.0376                GLOB UNIF   MZ-GRATT
LOAD Z 30143028        -0.0372       -0.0372                GLOB UNIF   MZ-GRATT
LOAD Z 30153029        -0.0367       -0.0367                GLOB UNIF   MZ-GRATT
LOAD Z 30173031        -0.0472       -0.0472                GLOB UNIF   MZ-GRATT
LOAD Z 31393140        -0.0330       -0.0330                GLOB UNIF   MZ-HANDR
LOAD Z 31403141        -0.0330       -0.0330                GLOB UNIF   MZ-HANDR
LOAD Z 31413142        -0.0330       -0.0330                GLOB UNIF   MZ-HANDR
LOAD Z 31423143        -0.0330       -0.0330                GLOB UNIF   MZ-HANDR
LOAD Z 31433144        -0.0330       -0.0330                GLOB UNIF   MZ-HANDR
LOAD Z 31443145        -0.0330       -0.0330                GLOB UNIF   MZ-HANDR
LOAD Z 31453146        -0.0330       -0.0330                GLOB UNIF   MZ-HANDR
LOAD Z 31463147        -0.0330       -0.0330                GLOB UNIF   MZ-HANDR
LOAD Z 31473148        -0.0330       -0.0330                GLOB UNIF   MZ-HANDR
```

```
LOAD Z 31483149        -0.0330       -0.0330                GLOB UNIF   MZ-HANDR
LOAD Z 31493150        -0.0330       -0.0330                GLOB UNIF   MZ-HANDR
LOAD Z 31503151        -0.0330       -0.0330                GLOB UNIF   MZ-HANDR
LOAD Z 31523153        -0.0330       -0.0330                GLOB UNIF   MZ-HANDR
LOAD Z 31513152        -0.0330       -0.0330                GLOB UNIF   MZ-HANDR
LOAD Z 31383153        -0.0330       -0.0330                GLOB UNIF   MZ-HANDR
LOAD Z 31213138        -0.0330       -0.0330                GLOB UNIF   MZ-HANDR
LOAD Z 31003121        -0.0330       -0.0330                GLOB UNIF   MZ-HANDR
LOAD Z 30723100        -0.0330       -0.0330                GLOB UNIF   MZ-HANDR
LOAD Z 30713072        -0.0330       -0.0330                GLOB UNIF   MZ-HANDR
LOAD Z 30493070        -0.0330       -0.0330                GLOB UNIF   MZ-HANDR
LOAD Z 30323049        -0.0330       -0.0330                GLOB UNIF   MZ-HANDR
LOAD Z 30183032        -0.0330       -0.0330                GLOB UNIF   MZ-HANDR
LOAD Z 30173018        -0.0330       -0.0330                GLOB UNIF   MZ-HANDR
LOAD Z 30163017        -0.0330       -0.0330                GLOB UNIF   MZ-HANDR
LOAD Z 30153016        -0.0330       -0.0330                GLOB UNIF   MZ-HANDR
LOAD Z 30143015        -0.0330       -0.0330                GLOB UNIF   MZ-HANDR
LOAD Z 30133014        -0.0330       -0.0330                GLOB UNIF   MZ-HANDR
LOAD Z 30123013        -0.0330       -0.0330                GLOB UNIF   MZ-HANDR
LOAD Z 30123026        -0.0330       -0.0330                GLOB UNIF   MZ-HANDR
LOAD Z 30253026        -0.0330       -0.0330                GLOB UNIF   MZ-HANDR
LOAD Z 30243025        -0.0330       -0.0330                GLOB UNIF   MZ-HANDR
LOAD Z 30233024        -0.0330       -0.0330                GLOB UNIF   MZ-HANDR
LOAD Z 30223023        -0.0330       -0.0330                GLOB UNIF   MZ-HANDR
LOAD Z 30203021        -0.0330       -0.0330                GLOB UNIF   MZ-HANDR
LOAD Z 30213022        -0.0330       -0.0330                GLOB UNIF   MZ-HANDR
LOAD Z 30193020        -0.0330       -0.0330                GLOB UNIF   MZ-HANDR
LOAD Z 30193033        -0.0330       -0.0330                GLOB UNIF   MZ-HANDR
LOAD Z 30333055        -0.0330       -0.0330                GLOB UNIF   MZ-HANDR
LOAD Z 30543055        -0.0330       -0.0330                GLOB UNIF   MZ-HANDR
LOAD Z 30503051        -0.0330       -0.0330                GLOB UNIF   MZ-HANDR
LOAD Z 30503082        -0.0330       -0.0330                GLOB UNIF   MZ-HANDR
LOAD Z 30863087        -0.0330       -0.0330                GLOB UNIF   MZ-HANDR
LOAD Z 30873106        -0.0330       -0.0330                GLOB UNIF   MZ-HANDR
LOAD Z 31063123        -0.0330       -0.0330                GLOB UNIF   MZ-HANDR
LOAD Z 31233139        -0.0330       -0.0330                GLOB UNIF   MZ-HANDR
*
***LDS1**    -36.750    25.833    40.000   -36.750    29.750    40.000   -36.750
***LDS2**     25.833    40.000   -36.750    29.750    40.000     0.017     0.017
***LDS3**      1.000  50   1   3   0   1105   -2EQUPPRESCD-PLATE
LOAD Z 22072225        -0.0548       -0.0548                GLOB UNIF   CD-PLATE
LOAD Z 22252232        -0.0548       -0.0548                GLOB UNIF   CD-PLATE
LOAD Z 22102234        -0.0561       -0.0561                GLOB UNIF   CD-PLATE
LOAD Z 22112235        -0.0835       -0.0835                GLOB UNIF   CD-PLATE
LOAD Z 22132237        -0.0828       -0.0828                GLOB UNIF   CD-PLATE
LOAD Z 22142238        -0.0548       -0.0548                GLOB UNIF   CD-PLATE
LOAD Z 22212245        -0.0891       -0.0891                GLOB UNIF   CD-PLATE
LOAD Z 22222246        -0.0617       -0.0617                GLOB UNIF   CD-PLATE
LOAD Z 21962224 12.8333-0.0158       -0.0158                GLOB UNIF   CD-PLATE
LOAD Z 22242248        -0.0158       -0.0158                GLOB UNIF   CD-PLATE
LOAD Z 22052229        -0.0916       -0.0916                GLOB UNIF   CD-PLATE
LOAD Z 22062227        -0.0579       -0.0579                GLOB UNIF   CD-PLATE
LOAD Z 22092233        -0.0554       -0.0554                GLOB UNIF   CD-PLATE
LOAD Z 22232247        -0.0466       -0.0466                GLOB UNIF   CD-PLATE
LOAD Z 22272231        -0.0579       -0.0579                GLOB UNIF   CD-PLATE
*
***LDS1**    -36.750    13.000    40.000   -36.750    25.833    40.000   -36.750
***LDS2**     13.000    40.000   -36.750    25.833    40.000     0.017     0.017
***LDS3**      1.000  50   1   3   0   1105   -2EQUPPRESCD-PLATE
LOAD Z 21822200        -0.0561       -0.0561                GLOB UNIF   CD-PLATE
LOAD Z 21852213        -0.0828       -0.0828                GLOB UNIF   CD-PLATE
LOAD Z 21862214        -0.0548       -0.0548                GLOB UNIF   CD-PLATE
LOAD Z 21942201        -0.0617       -0.0617                GLOB UNIF   CD-PLATE
LOAD Z 21992221        -0.0891       -0.0891                GLOB UNIF   CD-PLATE
LOAD Z 22012222        -0.0617       -0.0617                GLOB UNIF   CD-PLATE
LOAD Z 21962224        -0.015812.8333-0.0158                GLOB UNIF   CD-PLATE
LOAD Z 21782205        -0.0916       -0.0916                GLOB UNIF   CD-PLATE
LOAD Z 21792206        -0.0579       -0.0579                GLOB UNIF   CD-PLATE
LOAD Z 21952203        -0.0466       -0.0466                GLOB UNIF   CD-PLATE
LOAD Z 22022209        -0.0554       -0.0554                GLOB UNIF   CD-PLATE
```

```
LOAD Z 22032223        -0.0466       -0.0466                GLOB UNIF   CD-PLATE
*
***LDS1**    -29.500              40.000   -29.500    13.000    40.000   -29.500
***LDS2**                40.000   -29.500    13.000    40.000     0.017     0.017
***LDS3**      1.000  50   1   3   0   1105   -2EQUPPRESCD-PLATE
*
***LDS1**     13.000              40.000    13.000    13.000    40.000    13.000
***LDS2**                40.000    13.000    13.000    40.000     0.017     0.017
***LDS3**      1.000  50   1   3   0   1105   -2EQUPPRESCD-PLATE
LOAD Z 21482193        -0.0926       -0.0926                GLOB UNIF   CD-PLATE
LOAD Z 21492194        -0.0617       -0.0617                GLOB UNIF   CD-PLATE
LOAD Z 21512196        -0.0158       -0.0158                GLOB UNIF   CD-PLATE
LOAD Z 21502195        -0.0466       -0.0466                GLOB UNIF   CD-PLATE
*
***LDS1**    -29.500    -5.750    40.000   -29.500              40.000   -29.500
***LDS2**     -5.750    40.000   -29.500              40.000     0.017     0.017
***LDS3**      1.000  50   1   3   0   1105   -2EQUPPRESCD-PLATE
LOAD Z 21152134        -0.0821       -0.0821                GLOB UNIF   CD-PLATE
LOAD Z 21172136        -0.0561       -0.0561                GLOB UNIF   CD-PLATE
LOAD Z 21192137        -0.0843       -0.0843                GLOB UNIF   CD-PLATE
LOAD Z 21162135        -0.0554       -0.0554                GLOB UNIF   CD-PLATE
*
***LDS1**    -39.250   -13.000    40.000   -39.250    -5.750    40.000   -39.250
***LDS2**    -13.000    40.000   -39.250    -5.750    40.000     0.017     0.017
***LDS3**      1.000  50   1   3   0   1105   -2EQUPPRESCD-PLATE
LOAD Z 20842117        -0.0421       -0.0421                GLOB UNIF   CD-PLATE
LOAD Z 20802113        -0.0548       -0.0548                GLOB UNIF   CD-PLATE
LOAD Z 20792112        -0.0821       -0.0821                GLOB UNIF   CD-PLATE
LOAD Z 20822115        -0.0548       -0.0548                GLOB UNIF   CD-PLATE
LOAD Z 20862119        -0.0702       -0.0702                GLOB UNIF   CD-PLATE
LOAD Z 20812114        -0.0548       -0.0548                GLOB UNIF   CD-PLATE
LOAD Z 20832116        -0.0554       -0.0554                GLOB UNIF   CD-PLATE
*
***LDS1**     13.000   -13.000    40.000    13.000              40.000    13.000
***LDS2**    -13.000    40.000    13.000              40.000     0.017     0.017
***LDS3**      1.000  50   1   3   0   1105   -2EQUPPRESCD-PLATE
LOAD Z 21002151        -0.0158       -0.0158                GLOB UNIF   CD-PLATE
LOAD Z 20972148        -0.0926       -0.0926                GLOB UNIF   CD-PLATE
LOAD Z 20982149        -0.0617       -0.0617                GLOB UNIF   CD-PLATE
LOAD Z 20992150        -0.0466       -0.0466                GLOB UNIF   CD-PLATE
*
***LDS1**    -39.250   -23.000    40.000   -39.250   -13.000    40.000   -39.250
***LDS2**    -23.000    40.000   -39.250   -13.000    40.000     0.017     0.017
***LDS3**      1.000  50   1   3   0   1105   -2EQUPPRESCD-PLATE
LOAD Z 20482079        -0.0821       -0.0821                GLOB UNIF   CD-PLATE
LOAD Z 20492080        -0.0548       -0.0548                GLOB UNIF   CD-PLATE
LOAD Z 20512082        -0.0548       -0.0548                GLOB UNIF   CD-PLATE
LOAD Z 20532072        -0.0421       -0.0421                GLOB UNIF   CD-PLATE
LOAD Z 20552074        -0.0695       -0.0695                GLOB UNIF   CD-PLATE
LOAD Z 20582089        -0.0484       -0.0484                GLOB UNIF   CD-PLATE
LOAD Z 20612093        -0.0548       -0.0548                GLOB UNIF   CD-PLATE
LOAD Z 20622094        -0.0548       -0.0548                GLOB UNIF   CD-PLATE
LOAD Z 20632095        -0.0856       -0.0856                GLOB UNIF   CD-PLATE
LOAD Z 20652076        -0.0891       -0.0891                GLOB UNIF   CD-PLATE
LOAD Z 20662071        -0.0617       -0.0617                GLOB UNIF   CD-PLATE
LOAD Z 20712098        -0.0617       -0.0617                GLOB UNIF   CD-PLATE
LOAD Z 20692100        -0.0158       -0.0158                GLOB UNIF   CD-PLATE
LOAD Z 20592090        -0.0548       -0.0548                GLOB UNIF   CD-PLATE
LOAD Z 20682099        -0.0466       -0.0466                GLOB UNIF   CD-PLATE
LOAD Z 20502081        -0.0548       -0.0548                GLOB UNIF   CD-PLATE
LOAD Z 20542073        -0.0281       -0.0281                GLOB UNIF   CD-PLATE
LOAD Z 20602092        -0.0611       -0.0611                GLOB UNIF   CD-PLATE
LOAD Z 20722084        -0.0421       -0.0421                GLOB UNIF   CD-PLATE
*
***LDS1**    -39.250   -33.500    40.000   -39.250   -23.000    40.000   -39.250
***LDS2**    -33.500    40.000   -39.250   -23.000    40.000     0.017     0.017
***LDS3**      1.000  50   1   3   0   1105   -2EQUPPRESCD-PLATE
LOAD Z 20122020        -0.0548       -0.0548                GLOB UNIF   CD-PLATE
LOAD Z 20112019        -0.0821       -0.0821                GLOB UNIF   CD-PLATE
LOAD Z 20202049        -0.0548       -0.0548                GLOB UNIF   CD-PLATE
```

```
LOAD Z 20192048        -0.0821       -0.0821                GLOB UNIF   CD-PLATE
LOAD Z 20142022        -0.0548       -0.0548                GLOB UNIF   CD-PLATE
LOAD Z 20222041        -0.0548       -0.0548                GLOB UNIF   CD-PLATE
LOAD Z 20412051        -0.0548       -0.0548                GLOB UNIF   CD-PLATE
LOAD Z 20162024        -0.0281       -0.0281                GLOB UNIF   CD-PLATE
LOAD Z 20242053        -0.0281       -0.0281                GLOB UNIF   CD-PLATE
LOAD Z 20152023        -0.0554       -0.0554                GLOB UNIF   CD-PLATE
LOAD Z 20132021        -0.0548       -0.0548                GLOB UNIF   CD-PLATE
LOAD Z 20212050        -0.0548       -0.0548                GLOB UNIF   CD-PLATE
LOAD Z 20232045        -0.0554       -0.0554                GLOB UNIF   CD-PLATE
LOAD Z 20452052        -0.0554       -0.0554                GLOB UNIF   CD-PLATE
*
***LDS1**    -19.667   -29.500    40.000   -19.667   -23.000    40.000   -19.667
***LDS2**    -29.500    40.000   -19.667   -23.000    40.000     0.017     0.017
***LDS3**      1.000  50   1   3   0   1105   -2EQUPPRESCD-PLATE
LOAD Z 20242053        -0.0281       -0.0281                GLOB UNIF   CD-PLATE
LOAD Z 20252055        -0.0835       -0.0835                GLOB UNIF   CD-PLATE
LOAD Z 20272057        -0.0828       -0.0828                GLOB UNIF   CD-PLATE
LOAD Z 20282058        -0.0484       -0.0484                GLOB UNIF   CD-PLATE
LOAD Z 20312061        -0.0548       -0.0548                GLOB UNIF   CD-PLATE
LOAD Z 20322062        -0.0548       -0.0548                GLOB UNIF   CD-PLATE
LOAD Z 20332063        -0.0856       -0.0856                GLOB UNIF   CD-PLATE
LOAD Z 20382042        -0.0158       -0.0158                GLOB UNIF   CD-PLATE
LOAD Z 20422069        -0.0158       -0.0158                GLOB UNIF   CD-PLATE
LOAD Z 20292059        -0.0548       -0.0548                GLOB UNIF   CD-PLATE
LOAD Z 20372043        -0.0466       -0.0466                GLOB UNIF   CD-PLATE
LOAD Z 20432068        -0.0466       -0.0466                GLOB UNIF   CD-PLATE
LOAD Z 20302060        -0.0611       -0.0611                GLOB UNIF   CD-PLATE
*
***LDS1**    -19.667   -33.500    40.000   -19.667   -29.500    40.000   -19.667
***LDS2**    -33.500    40.000   -19.667   -29.500    40.000     0.017     0.017
***LDS3**      1.000  50   1   3   0   1105   -2EQUPPRESCD-PLATE
LOAD Z 20162024        -0.0561       -0.0561                GLOB UNIF   CD-PLATE
*
***LDS1**     25.875   -29.500    40.000    25.875    29.750    40.000    25.875
***LDS2**    -29.500    40.000    25.875    29.750    40.000     0.017     0.017
***LDS3**      1.000  50   1   3   0   1105   -2EQUPPRESCD-PLATE
LOAD Z 21002151        -0.0316       -0.0316                GLOB UNIF   CD-PLATE
LOAD Z 20382042        -0.0316       -0.0316                GLOB UNIF   CD-PLATE
LOAD Z 20692100        -0.0316       -0.0316                GLOB UNIF   CD-PLATE
LOAD Z 21512196        -0.0316       -0.0316                GLOB UNIF   CD-PLATE
LOAD Z 21962224        -0.0316       -0.0316                GLOB UNIF   CD-PLATE
LOAD Z 22242248        -0.0316       -0.0316                GLOB UNIF   CD-PLATE
LOAD Z 20422069        -0.0316       -0.0316                GLOB UNIF   CD-PLATE
*
***LDS1**    -13.000   -13.000    40.000   -13.000    13.000    40.000   -13.000
***LDS2**    -13.000    40.000   -13.000    13.000    40.000    -0.011    -0.011
***LDS3**      1.000  50   3   3   0   1105   -2EQUPPRESCD-GRATT
LOAD Z 21392170        -0.0558       -0.0558                GLOB UNIF   CD-GRATT
LOAD Z 20882102        -0.0558       -0.0558                GLOB UNIF   CD-GRATT
LOAD Z 20892110        -0.0186       -0.0186                GLOB UNIF   CD-GRATT
LOAD Z 21402162        -0.0186       -0.0186                GLOB UNIF   CD-GRATT
LOAD Z 21102140        -0.0186       -0.0186                GLOB UNIF   CD-GRATT
LOAD Z 21022139        -0.0558       -0.0558                GLOB UNIF   CD-GRATT
LOAD Z 21622186        -0.0186       -0.0186                GLOB UNIF   CD-GRATT
LOAD Z 21702185        -0.0558       -0.0558                GLOB UNIF   CD-GRATT
*
***LDS1**     -6.500   -13.000    40.000    -6.500              40.000    -6.500
***LDS2**    -13.000    40.000    -6.500              40.000    -0.011    -0.011
***LDS3**      1.000  50   3   3   0   1105   -2EQUPPRESCD-GRATT
LOAD Z 20892110        -0.0372       -0.0372                GLOB UNIF   CD-GRATT
LOAD Z 21102140        -0.0372       -0.0372                GLOB UNIF   CD-GRATT
LOAD Z 20922103        -0.0372       -0.0372                GLOB UNIF   CD-GRATT
LOAD Z 21032123        -0.0372       -0.0372                GLOB UNIF   CD-GRATT
LOAD Z 21232000        -0.0697       -0.0697                GLOB UNIF   CD-GRATT
*
***LDS1**     -6.500              40.000    -6.500    13.000    40.000    -6.500
***LDS2**                40.000    -6.500    13.000    40.000    -0.011    -0.011
***LDS3**      1.000  50   3   3   0   1105   -2EQUPPRESCD-GRATT
LOAD Z 21402162        -0.0372       -0.0372                GLOB UNIF   CD-GRATT
```

```
LOAD Z 21622186        -0.0372       -0.0372                GLOB UNIF   CD-GRATT
LOAD Z 21762188        -0.0372       -0.0372                GLOB UNIF   CD-GRATT
LOAD Z 21642173        -0.0372       -0.0372                GLOB UNIF   CD-GRATT
LOAD Z 20002159        -0.0697       -0.0697                GLOB UNIF   CD-GRATT
LOAD Z 21592164        -0.0372       -0.0372                GLOB UNIF   CD-GRATT
LOAD Z 21732176        -0.0372       -0.0372                GLOB UNIF   CD-GRATT
*
***LDS1**                         40.000              13.000    40.000
***LDS2**                40.000              13.000    40.000    -0.011    -0.011
***LDS3**      1.000  50   3   3   0   1105   -2EQUPPRESCD-GRATT
LOAD Z 21762188        -0.1487       -0.1487                GLOB UNIF   CD-GRATT
LOAD Z 21642173        -0.1487       -0.1487                GLOB UNIF   CD-GRATT
LOAD Z 20002159        -0.2789       -0.2789                GLOB UNIF   CD-GRATT
LOAD Z 21592164        -0.1487       -0.1487                GLOB UNIF   CD-GRATT
LOAD Z 21732176        -0.1487       -0.1487                GLOB UNIF   CD-GRATT
*
***LDS1**              -13.000    40.000                        40.000
***LDS2**    -13.000    40.000                      40.000    -0.011    -0.011
***LDS3**      1.000  50   3   3   0   1105   -2EQUPPRESCD-GRATT
LOAD Z 20922103        -0.1487       -0.1487                GLOB UNIF   CD-GRATT
LOAD Z 21032123        -0.1487       -0.1487                GLOB UNIF   CD-GRATT
LOAD Z 21232000        -0.2789       -0.2789                GLOB UNIF   CD-GRATT
LOAD Z 21772204        -0.0330       -0.0330                GLOB UNIF   CD-HANDR
LOAD Z 22042228        -0.0330       -0.0330                GLOB UNIF   CD-HANDR
LOAD Z 22282229        -0.0330       -0.0330                GLOB UNIF   CD-HANDR
LOAD Z 22292230        -0.0330       -0.0330                GLOB UNIF   CD-HANDR
LOAD Z 22312232        -0.0330       -0.0330                GLOB UNIF   CD-HANDR
LOAD Z 22302231        -0.0330       -0.0330                GLOB UNIF   CD-HANDR
LOAD Z 22322233        -0.0330       -0.0330                GLOB UNIF   CD-HANDR
LOAD Z 22332234        -0.0330       -0.0330                GLOB UNIF   CD-HANDR
LOAD Z 22342235        -0.0330       -0.0330                GLOB UNIF   CD-HANDR
LOAD Z 22352236        -0.0330       -0.0330                GLOB UNIF   CD-HANDR
LOAD Z 22362237        -0.0330       -0.0330                GLOB UNIF   CD-HANDR
LOAD Z 22372238        -0.0330       -0.0330                GLOB UNIF   CD-HANDR
LOAD Z 22382239        -0.0330       -0.0330                GLOB UNIF   CD-HANDR
LOAD Z 22392240        -0.0330       -0.0330                GLOB UNIF   CD-HANDR
LOAD Z 22402241        -0.0330       -0.0330                GLOB UNIF   CD-HANDR
LOAD Z 22412242        -0.0330       -0.0330                GLOB UNIF   CD-HANDR
LOAD Z 22422243        -0.0330       -0.0330                GLOB UNIF   CD-HANDR
LOAD Z 22432244        -0.0330       -0.0330                GLOB UNIF   CD-HANDR
LOAD Z 22442245        -0.0330       -0.0330                GLOB UNIF   CD-HANDR
LOAD Z 22452246        -0.0330       -0.0330                GLOB UNIF   CD-HANDR
LOAD Z 22462247        -0.0330       -0.0330                GLOB UNIF   CD-HANDR
LOAD Z 22472248        -0.0330       -0.0330                GLOB UNIF   CD-HANDR
LOAD Z 22482249        -0.0330       -0.0330                GLOB UNIF   CD-HANDR
LOAD Z 22262249        -0.0330       -0.0330                GLOB UNIF   CD-HANDR
LOAD Z 21972226        -0.0330       -0.0330                GLOB UNIF   CD-HANDR
LOAD Z 21522197        -0.0330       -0.0330                GLOB UNIF   CD-HANDR
LOAD Z 21012152        -0.0330       -0.0330                GLOB UNIF   CD-HANDR
LOAD Z 21772178        -0.0330       -0.0330                GLOB UNIF   CD-HANDR
LOAD Z 21332179        -0.0330       -0.0330                GLOB UNIF   CD-HANDR
LOAD Z 20782111        -0.0330       -0.0330                GLOB UNIF   CD-HANDR
LOAD Z 20472078        -0.0330       -0.0330                GLOB UNIF   CD-HANDR
LOAD Z 20182047        -0.0330       -0.0330                GLOB UNIF   CD-HANDR
LOAD Z 20102018        -0.0330       -0.0330                GLOB UNIF   CD-HANDR
LOAD Z 20102011        -0.0330       -0.0330                GLOB UNIF   CD-HANDR
LOAD Z 20112012        -0.0330       -0.0330                GLOB UNIF   CD-HANDR
LOAD Z 20122013        -0.0330       -0.0330                GLOB UNIF   CD-HANDR
LOAD Z 20132014        -0.0330       -0.0330                GLOB UNIF   CD-HANDR
LOAD Z 20152016        -0.0330       -0.0330                GLOB UNIF   CD-HANDR
LOAD Z 20142015        -0.0330       -0.0330                GLOB UNIF   CD-HANDR
LOAD Z 20162017        -0.0330       -0.0330                GLOB UNIF   CD-HANDR
LOAD Z 20252026        -0.0330       -0.0330                GLOB UNIF   CD-HANDR
LOAD Z 20262027        -0.0330       -0.0330                GLOB UNIF   CD-HANDR
LOAD Z 20272028        -0.0330       -0.0330                GLOB UNIF   CD-HANDR
LOAD Z 20282029        -0.0330       -0.0330                GLOB UNIF   CD-HANDR
LOAD Z 20302031        -0.0330       -0.0330                GLOB UNIF   CD-HANDR
LOAD Z 20312032        -0.0330       -0.0330                GLOB UNIF   CD-HANDR
LOAD Z 20322033        -0.0330       -0.0330                GLOB UNIF   CD-HANDR
LOAD Z 20332034        -0.0330       -0.0330                GLOB UNIF   CD-HANDR
```

```
LOAD Z 20352036        -0.0330       -0.0330                GLOB UNIF   CD-HANDR
LOAD Z 20362037        -0.0330       -0.0330                GLOB UNIF   CD-HANDR
LOAD Z 20372038        -0.0330       -0.0330                GLOB UNIF   CD-HANDR
LOAD Z 20382039        -0.0330       -0.0330                GLOB UNIF   CD-HANDR
LOAD Z 20392040        -0.0330       -0.0330                GLOB UNIF   CD-HANDR
LOAD Z 20402070        -0.0330       -0.0330                GLOB UNIF   CD-HANDR
LOAD Z 20702101        -0.0330       -0.0330                GLOB UNIF   CD-HANDR
*
***LDS1**    -13.000    -2.000    24.000   -13.000    13.000    24.000   -13.000
***LDS2**     -2.000    24.000   -13.000    13.000    24.000    -0.011    -0.011
***LDS3**      1.000  50   3   3   0   1105   -2EQUPPRESSCD-GRAT
LOAD Z 10621065        -0.0257       -0.0257                GLOB UNIF   SCD-GRAT
LOAD Z 10591062        -0.0257       -0.0257                GLOB UNIF   SCD-GRAT
LOAD Z 10601066        -0.0543       -0.0543                GLOB UNIF   SCD-GRAT
LOAD Z 10611064        -0.0286       -0.0286                GLOB UNIF   SCD-GRAT
LOAD Z 10651068        -0.0257       -0.0257                GLOB UNIF   SCD-GRAT
LOAD Z 10661069        -0.0543       -0.0543                GLOB UNIF   SCD-GRAT
LOAD Z 10641067        -0.0286       -0.0286                GLOB UNIF   SCD-GRAT
LOAD Z 10671070        -0.0286       -0.0286                GLOB UNIF   SCD-GRAT
LOAD Z 10681003        -0.0257       -0.0257                GLOB UNIF   SCD-GRAT
LOAD Z 10691073        -0.0543       -0.0543                GLOB UNIF   SCD-GRAT
LOAD Z 10701074        -0.0286       -0.0286                GLOB UNIF   SCD-GRAT
*
***LDS1**     -3.500     9.000    24.000    -3.500    13.000    24.000    -3.500
***LDS2**      9.000    24.000    -3.500    13.000    24.000    -0.011    -0.011
***LDS3**      1.000  50   3   3   0   1105   -2EQUPPRESSCD-GRAT
LOAD Z 10701074        -0.0200       -0.0200                GLOB UNIF   SCD-GRAT
LOAD Z 10711075        -0.0200       -0.0200                GLOB UNIF   SCD-GRAT
*
***LDS1**    -13.000   -13.000    24.000   -13.000    -2.000    24.000   -13.000
***LDS2**    -13.000    24.000   -13.000    -2.000    24.000    -0.011    -0.011
***LDS3**      1.000  50   3   3   0   1105   -2EQUPPRESSCD-GRAT
LOAD Z 10011054        -0.0543       -0.0543                GLOB UNIF   SCD-GRAT
LOAD Z 10401046        -0.0543       -0.0543                GLOB UNIF   SCD-GRAT
LOAD Z 10461055        -0.0543       -0.0543                GLOB UNIF   SCD-GRAT
LOAD Z 10551056        -0.0543       -0.0543                GLOB UNIF   SCD-GRAT
LOAD Z 10561061        -0.0543       -0.0543                GLOB UNIF   SCD-GRAT
LOAD Z 10541059        -0.0543       -0.0543                GLOB UNIF   SCD-GRAT
*
***LDS1**     -3.500    -7.938    24.000    -3.500    -4.500    24.000    -3.500
***LDS2**     -7.938    24.000    -3.500    -4.500    24.000    -0.011    -0.011
***LDS3**      1.000  50   3   3   0   1105   -2EQUPPRESSCD-GRAT
LOAD Z 10461055        -0.0343       -0.0343                GLOB UNIF   SCD-GRAT
LOAD Z 10481057        -0.0572       -0.0572                GLOB UNIF   SCD-GRAT
LOAD Z 10491050        -0.0229       -0.0229                GLOB UNIF   SCD-GRAT
LOAD Z 10551056        -0.0343       -0.0343                GLOB UNIF   SCD-GRAT
LOAD Z 10501058        -0.0229       -0.0229                GLOB UNIF   SCD-GRAT
*
***LDS1**     -3.500   -13.000    24.000    -3.500    -7.938    24.000    -3.500
***LDS2**    -13.000    24.000    -3.500    -7.938    24.000    -0.011    -0.011
***LDS3**      1.000  50   3   3   0   1105   -2EQUPPRESSCD-GRAT
LOAD Z 10401046        -0.0200       -0.0200                GLOB UNIF   SCD-GRAT
LOAD Z 10421049        -0.0372       -0.0372                GLOB UNIF   SCD-GRAT
LOAD Z 10411047        -0.0572       -0.0572                GLOB UNIF   SCD-GRAT
*
***LDS1**      6.500   -13.000    24.000     6.500    -7.500    24.000     6.500
***LDS2**    -13.000    24.000     6.500    -7.500    24.000    -0.011    -0.011
***LDS3**      1.000  50   3   3   0   1105   -2EQUPPRESSCD-GRAT
LOAD Z 10421049        -0.0372       -0.0372                GLOB UNIF   SCD-GRAT
LOAD Z 10021051        -0.0801       -0.0801                GLOB UNIF   SCD-GRAT
LOAD Z 10441052        -0.0858       -0.0858                GLOB UNIF   SCD-GRAT
LOAD Z 10451053        -0.0429       -0.0429                GLOB UNIF   SCD-GRAT
LOAD Z 10491050        -0.0372       -0.0372                GLOB UNIF   SCD-GRAT
*
***LDS1**    -13.000   -18.500    24.000   -13.000   -13.000    24.000   -13.000
***LDS2**    -18.500    24.000   -13.000   -13.000    24.000    -0.011    -0.011
***LDS3**      1.000  50   3   3   0   1105   -2EQUPPRESSCD-GRAT
LOAD Z 10301001        -0.0248       -0.0248                GLOB UNIF   SCD-GRAT
LOAD Z 10311039        -0.0744       -0.0744                GLOB UNIF   SCD-GRAT
LOAD Z 10331042        -0.0744       -0.0744                GLOB UNIF   SCD-GRAT
```

```
LOAD Z 10341002        -0.0801       -0.0801                GLOB UNIF   SCD-GRAT
LOAD Z 10351044        -0.0858       -0.0858                GLOB UNIF   SCD-GRAT
LOAD Z 10361045        -0.0429       -0.0429                GLOB UNIF   SCD-GRAT
LOAD Z 10321041        -0.0868       -0.0868                GLOB UNIF   SCD-GRAT
*
***LDS1**     -8.667   -29.500    24.000    -8.667   -18.500    24.000    -8.667
***LDS2**    -29.500    24.000    -8.667   -18.500    24.000    -0.011    -0.011
***LDS3**      1.000  50   3   3   0   1105   -2EQUPPRESSCD-GRAT
LOAD Z 10161024        -0.0496       -0.0496                GLOB UNIF   SCD-GRAT
LOAD Z 10191026        -0.0744       -0.0744                GLOB UNIF   SCD-GRAT
LOAD Z 10201027        -0.0801       -0.0801                GLOB UNIF   SCD-GRAT
LOAD Z 10211028        -0.0858       -0.0858                GLOB UNIF   SCD-GRAT
LOAD Z 10221023        -0.0429       -0.0429                GLOB UNIF   SCD-GRAT
LOAD Z 10231029        -0.0429       -0.0429                GLOB UNIF   SCD-GRAT
LOAD Z 10241031        -0.0496       -0.0496                GLOB UNIF   SCD-GRAT
LOAD Z 10181025        -0.0868       -0.0868                GLOB UNIF   SCD-GRAT
LOAD Z 10261033        -0.0744       -0.0744                GLOB UNIF   SCD-GRAT
LOAD Z 10291036        -0.0429       -0.0429                GLOB UNIF   SCD-GRAT
LOAD Z 10251032        -0.0868       -0.0868                GLOB UNIF   SCD-GRAT
*
***LDS1**    -13.000   -33.500    24.000   -13.000   -29.500    24.000   -13.000
***LDS2**    -33.500    24.000   -13.000   -29.500    24.000    -0.011    -0.011
***LDS3**      1.000  50   3   3   0   1105   -2EQUPPRESSCD-GRAT
LOAD Z 10121017        -0.0372       -0.0372                GLOB UNIF   SCD-GRAT
LOAD Z 10101015        -0.0248       -0.0248                GLOB UNIF   SCD-GRAT
LOAD Z 10111016        -0.0619       -0.0619                GLOB UNIF   SCD-GRAT
*
***LDS1**      6.500   -33.500    24.000     6.500   -29.500    24.000     6.500
***LDS2**    -33.500    24.000     6.500   -29.500    24.000    -0.011    -0.011
***LDS3**      1.000  50   3   3   0   1105   -2EQUPPRESSCD-GRAT
LOAD Z 10101015        -0.0330       -0.0330                GLOB UNIF   SCD-HAND
LOAD Z 10161024        -0.0330       -0.0330                GLOB UNIF   SCD-HAND
LOAD Z 10241031        -0.0330       -0.0330                GLOB UNIF   SCD-HAND
LOAD Z 10301031        -0.0330       -0.0330                GLOB UNIF   SCD-HAND
LOAD Z 10301001        -0.0330       -0.0330                GLOB UNIF   SCD-HAND
LOAD Z 10011054        -0.0330       -0.0330                GLOB UNIF   SCD-HAND
LOAD Z 10541059        -0.0330       -0.0330                GLOB UNIF   SCD-HAND
LOAD Z 10621065        -0.0330       -0.0330                GLOB UNIF   SCD-HAND
LOAD Z 10591062        -0.0330       -0.0330                GLOB UNIF   SCD-HAND
LOAD Z 10651068        -0.0330       -0.0330                GLOB UNIF   SCD-HAND
LOAD Z 10681003        -0.0330       -0.0330                GLOB UNIF   SCD-HAND
LOAD Z 10031073        -0.0330       -0.0330                GLOB UNIF   SCD-HAND
LOAD Z 10731074        -0.0330       -0.0330                GLOB UNIF   SCD-HAND
LOAD Z 10741075        -0.0330       -0.0330                GLOB UNIF   SCD-HAND
LOAD Z 10711075        -0.0330       -0.0330                GLOB UNIF   SCD-HAND
LOAD Z 10701071        -0.0330       -0.0330                GLOB UNIF   SCD-HAND
LOAD Z 10671070        -0.0330       -0.0330                GLOB UNIF   SCD-HAND
LOAD Z 10641067        -0.0330       -0.0330                GLOB UNIF   SCD-HAND
LOAD Z 10611064        -0.0330       -0.0330                GLOB UNIF   SCD-HAND
LOAD Z 10561061        -0.0330       -0.0330                GLOB UNIF   SCD-HAND
LOAD Z 10561057        -0.0330       -0.0330                GLOB UNIF   SCD-HAND
LOAD Z 10571058        -0.0330       -0.0330                GLOB UNIF   SCD-HAND
LOAD Z 10501058        -0.0330       -0.0330                GLOB UNIF   SCD-HAND
LOAD Z 10451053        -0.0330       -0.0330                GLOB UNIF   SCD-HAND
LOAD Z 10361045        -0.0330       -0.0330                GLOB UNIF   SCD-HAND
LOAD Z 10291036        -0.0330       -0.0330                GLOB UNIF   SCD-HAND
LOAD Z 10231029        -0.0330       -0.0330                GLOB UNIF   SCD-HAND
LOAD Z 10221023        -0.0330       -0.0330                GLOB UNIF   SCD-HAND
LOAD Z 10171018        -0.0330       -0.0330                GLOB UNIF   SCD-HAND
LOAD Z 10121017        -0.0330       -0.0330                GLOB UNIF   SCD-HAND
LOAD Z 10101011        -0.0330       -0.0330                GLOB UNIF   SCD-HAND
LOAD Z 30833084        -0.0330       -0.0330                GLOB UNIF   MZ-HANDR
LOAD Z 30843085        -0.0330       -0.0330                GLOB UNIF   MZ-HANDR
LOAD Z 41934194        -0.0330       -0.0330                GLOB UNIF   MD-HANDR
LOAD Z 41944195        -0.0330       -0.0330                GLOB UNIF   MD-HANDR
LOAD Z 41954196        -0.0330       -0.0330                GLOB UNIF   MD-HANDR
LOAD Z 41964197        -0.0330       -0.0330                GLOB UNIF   MD-HANDR
LOAD Z 41974198        -0.0330       -0.0330                GLOB UNIF   MD-HANDR
LOAD Z 41984199        -0.0330       -0.0330                GLOB UNIF   MD-HANDR
LOAD Z 41994200        -0.0330       -0.0330                GLOB UNIF   MD-HANDR
```

```
LOAD Z 42004201        -0.0330       -0.0330                GLOB UNIF   MD-HANDR
LOAD Z 42014202        -0.0330       -0.0330                GLOB UNIF   MD-HANDR
LOAD Z 42024203        -0.0330       -0.0330                GLOB UNIF   MD-HANDR
LOAD Z 42034204        -0.0330       -0.0330                GLOB UNIF   MD-HANDR
LOAD Z 42044205        -0.0330       -0.0330                GLOB UNIF   MD-HANDR
LOAD Z 42054206        -0.0330       -0.0330                GLOB UNIF   MD-HANDR
LOAD Z 41254145        -0.0330       -0.0330                GLOB UNIF   MD-HANDR
LOAD Z 41454168        -0.0330       -0.0330                GLOB UNIF   MD-HANDR
LOAD Z 40944107        -0.0330       -0.0330                GLOB UNIF   MD-HANDR
LOAD Z 41074125        -0.0330       -0.0330                GLOB UNIF   MD-HANDR
LOAD   4004                  -4.8501                       GLOB JOIN   PADEYE
LOAD   4003                  -4.8501                       GLOB JOIN   PADEYE
LOAD   4001                  -4.8501                       GLOB JOIN   PADEYE
LOAD   4002                  -4.8501                       GLOB JOIN   PADEYE
LOAD Z 30683074        -0.0692       -0.0692                GLOB UNIF   MZ-GRATT
LOAD Z 30743096        -0.0692       -0.0692                GLOB UNIF   MZ-GRATT
LOAD Z 30713077        -0.0648       -0.0648                GLOB UNIF   MZ-GRATT
LOAD Z 30773099        -0.0648       -0.0648                GLOB UNIF   MZ-GRATT
LOAD Z 21112130        -0.0330       -0.0330                GLOB UNIF   CD-HANDR
LOAD Z 21302131        -0.0330       -0.0330                GLOB UNIF   CD-HANDR
LOAD Z 21312132        -0.0330       -0.0330                GLOB UNIF   CD-HANDR
LOAD Z 21322133        -0.0330       -0.0330                GLOB UNIF   CD-HANDR
*
***LDS1**    -39.250    -5.750    44.000   -39.250              44.000   -39.250
***LDS2**     -5.750    44.000   -39.250              44.000     0.017     0.017
***LDS3**      1.000  50   1   3   0   1105   -2EQUPPRESCD-PLATE
LOAD Z 21142133        -0.0274       -0.0274                GLOB UNIF   CD-PLATE
LOAD Z 21112130        -0.0274       -0.0274                GLOB UNIF   CD-PLATE
LOAD Z 21122131        -0.0548       -0.0548                GLOB UNIF   CD-PLATE
LOAD Z 21132132        -0.0548       -0.0548                GLOB UNIF   CD-PLATE
*
***LDS1**    -29.500    21.250    65.000   -29.500    30.000    65.000   -29.500
***LDS2**     21.250    65.000   -29.500    30.000    65.000     0.017     0.017
***LDS3**      1.000  50   1   3   0   1105   -2EQUPPRESMD-PLATE
LOAD Z 41734194        -0.0505       -0.0505                GLOB UNIF   MD-PLATE
LOAD Z 41704191        -0.0631       -0.0631                GLOB UNIF   MD-PLATE
LOAD Z 41744195        -0.0505       -0.0505                GLOB UNIF   MD-PLATE
LOAD Z 41774198        -0.0469       -0.0469                GLOB UNIF   MD-PLATE
LOAD Z 41784199        -0.0626       -0.0626                GLOB UNIF   MD-PLATE
LOAD Z 41794200        -0.0626       -0.0626                GLOB UNIF   MD-PLATE
LOAD Z 41864207        -0.0484       -0.0484                GLOB UNIF   MD-PLATE
LOAD Z 41884208        -0.0463       -0.0463                GLOB UNIF   MD-PLATE
LOAD Z 41894209        -0.0210       -0.0210                GLOB UNIF   MD-PLATE
LOAD Z 41694190        -0.0316       -0.0316                GLOB UNIF   MD-PLATE
LOAD Z 41754196        -0.0410       -0.0410                GLOB UNIF   MD-PLATE
LOAD Z 41844205        -0.0545       -0.0545                GLOB UNIF   MD-PLATE
LOAD Z 41714192        -0.0569       -0.0569                GLOB UNIF   MD-PLATE
*
***LDS1**    -29.500    13.000    65.000   -29.500    21.250    65.000   -29.500
***LDS2**     13.000    65.000   -29.500    21.250    65.000     0.017     0.017
***LDS3**      1.000  50   1   3   0   1105   -2EQUPPRESMD-PLATE
LOAD Z 41474170        -0.0631       -0.0631                GLOB UNIF   MD-PLATE
LOAD Z 41494173        -0.0505       -0.0505                GLOB UNIF   MD-PLATE
LOAD Z 41504174        -0.0505       -0.0505                GLOB UNIF   MD-PLATE
LOAD Z 41534177        -0.0626       -0.0626                GLOB UNIF   MD-PLATE
LOAD Z 41554178        -0.0626       -0.0626                GLOB UNIF   MD-PLATE
LOAD Z 41664186        -0.0463       -0.0463                GLOB UNIF   MD-PLATE
LOAD Z 41674187        -0.0463       -0.0463                GLOB UNIF   MD-PLATE
LOAD Z 41584179        -0.0626       -0.0626                GLOB UNIF   MD-PLATE
LOAD Z 41604181        -0.0626       -0.0626                GLOB UNIF   MD-PLATE
LOAD Z 41624182        -0.0626       -0.0626                GLOB UNIF   MD-PLATE
LOAD Z 41644183        -0.0626       -0.0626                GLOB UNIF   MD-PLATE
LOAD Z 40034175        -0.0565       -0.0565                GLOB UNIF   MD-PLATE
LOAD Z 40044184        -0.0545       -0.0545                GLOB UNIF   MD-PLATE
LOAD Z 41684189        -0.0232       -0.0232                GLOB UNIF   MD-PLATE
LOAD Z 41464169        -0.0316       -0.0316                GLOB UNIF   MD-PLATE
LOAD Z 41484171        -0.0569       -0.0569                GLOB UNIF   MD-PLATE
*
***LDS1**    -29.500    -7.500    65.000   -29.500    13.000    65.000   -29.500
***LDS2**     -7.500    65.000   -29.500    13.000    65.000     0.017     0.017
```

```
***LDS3**      1.000  50   1   3   0   1105   -2EQUPPRESMD-PLATE
LOAD Z 41164134        -0.0631       -0.0631                GLOB UNIF   MD-PLATE
LOAD Z 40994119        -0.0505       -0.0505                GLOB UNIF   MD-PLATE
LOAD Z 41184136        -0.0505       -0.0505                GLOB UNIF   MD-PLATE
LOAD Z 41194137        -0.0505       -0.0505                GLOB UNIF   MD-PLATE
LOAD Z 41374150        -0.0505       -0.0505                GLOB UNIF   MD-PLATE
LOAD Z 40954115        -0.0316       -0.0316                GLOB UNIF   MD-PLATE
LOAD Z 41154133        -0.0316       -0.0316                GLOB UNIF   MD-PLATE
LOAD Z 41334146        -0.0316       -0.0316                GLOB UNIF   MD-PLATE
LOAD Z 41004108        -0.0253       -0.0253                GLOB UNIF   MD-PLATE
LOAD Z 41084113        -0.0253       -0.0253                GLOB UNIF   MD-PLATE
LOAD Z 41204126        -0.0253       -0.0253                GLOB UNIF   MD-PLATE
LOAD Z 41264128        -0.0253       -0.0253                GLOB UNIF   MD-PLATE
LOAD Z 41284138        -0.0253       -0.0253                GLOB UNIF   MD-PLATE
LOAD Z 41134120        -0.0253       -0.0253                GLOB UNIF   MD-PLATE
LOAD Z 41174135        -0.0569       -0.0569                GLOB UNIF   MD-PLATE
LOAD Z 41384003        -0.0253       -0.0253                GLOB UNIF   MD-PLATE
*
***LDS1**    -25.750   -21.250    65.000   -25.750    -7.500    65.000   -25.750
***LDS2**    -21.250    65.000   -25.750    -7.500    65.000     0.017     0.017
***LDS3**      1.000  50   1   3   0   1105   -2EQUPPRESMD-PLATE
LOAD Z 40494063        -0.0505       -0.0505                GLOB UNIF   MD-PLATE
LOAD Z 40754098        -0.0505       -0.0505                GLOB UNIF   MD-PLATE
LOAD Z 40764099        -0.0505       -0.0505                GLOB UNIF   MD-PLATE
LOAD Z 40634076        -0.0505       -0.0505                GLOB UNIF   MD-PLATE
LOAD Z 40014100        -0.0253       -0.0253                GLOB UNIF   MD-PLATE
LOAD Z 40734096        -0.0316       -0.0316                GLOB UNIF   MD-PLATE
LOAD Z 40464073        -0.0316       -0.0316                GLOB UNIF   MD-PLATE
LOAD Z 40744097        -0.0569       -0.0569                GLOB UNIF   MD-PLATE
LOAD Z 40504064        -0.0253       -0.0253                GLOB UNIF   MD-PLATE
LOAD Z 40644001        -0.0253       -0.0253                GLOB UNIF   MD-PLATE
*
***LDS1**    -29.500   -29.500    65.000   -29.500   -21.250    65.000   -29.500
***LDS2**    -29.500    65.000   -29.500   -21.250    65.000     0.017     0.017
***LDS3**      1.000  50   1   3   0   1105   -2EQUPPRESMD-PLATE
LOAD Z 40164046        -0.0631       -0.0631                GLOB UNIF   MD-PLATE
LOAD Z 40194038        -0.0505       -0.0505                GLOB UNIF   MD-PLATE
LOAD Z 40284035        -0.0463       -0.0463                GLOB UNIF   MD-PLATE
LOAD Z 40294036        -0.0463       -0.0463                GLOB UNIF   MD-PLATE
LOAD Z 40214040        -0.0626       -0.0626                GLOB UNIF   MD-PLATE
LOAD Z 40224052        -0.0626       -0.0626                GLOB UNIF   MD-PLATE
LOAD Z 40234053        -0.0626       -0.0626                GLOB UNIF   MD-PLATE
LOAD Z 40244031        -0.0626       -0.0626                GLOB UNIF   MD-PLATE
LOAD Z 40254032        -0.0626       -0.0626                GLOB UNIF   MD-PLATE
LOAD Z 40264033        -0.0626       -0.0626                GLOB UNIF   MD-PLATE
LOAD Z 40314042        -0.0626       -0.0626                GLOB UNIF   MD-PLATE
LOAD Z 40324043        -0.0626       -0.0626                GLOB UNIF   MD-PLATE
LOAD Z 40334044        -0.0626       -0.0626                GLOB UNIF   MD-PLATE
LOAD Z 40354058        -0.0463       -0.0463                GLOB UNIF   MD-PLATE
LOAD Z 40364059        -0.0463       -0.0463                GLOB UNIF   MD-PLATE
LOAD Z 40424054        -0.0626       -0.0626                GLOB UNIF   MD-PLATE
LOAD Z 40434055        -0.0626       -0.0626                GLOB UNIF   MD-PLATE
LOAD Z 40444056        -0.0626       -0.0626                GLOB UNIF   MD-PLATE
LOAD Z 40384049        -0.0505       -0.0505                GLOB UNIF   MD-PLATE
LOAD Z 40404051        -0.0626       -0.0626                GLOB UNIF   MD-PLATE
LOAD Z 40154045        -0.0316       -0.0316                GLOB UNIF   MD-PLATE
LOAD Z 40304060        -0.0232       -0.0232                GLOB UNIF   MD-PLATE
LOAD Z 40204039        -0.0565       -0.0565                GLOB UNIF   MD-PLATE
LOAD Z 40274034        -0.0545       -0.0545                GLOB UNIF   MD-PLATE
LOAD Z 40414050        -0.0565       -0.0565                GLOB UNIF   MD-PLATE
LOAD Z 40394041        -0.0565       -0.0565                GLOB UNIF   MD-PLATE
LOAD Z 40174047        -0.0569       -0.0569                GLOB UNIF   MD-PLATE
*
***LDS1**    -13.000   -21.250    65.000   -13.000   -13.000    65.000   -13.000
***LDS2**    -21.250    65.000   -13.000   -13.000    65.000     0.017     0.017
***LDS3**      1.000  50   1   3   0   1105   -2EQUPPRESMD-PLATE
LOAD Z 40584072        -0.0463       -0.0463                GLOB UNIF   MD-PLATE
LOAD Z 40594093        -0.0463       -0.0463                GLOB UNIF   MD-PLATE
LOAD Z 40534067        -0.0626       -0.0626                GLOB UNIF   MD-PLATE
LOAD Z 40544068        -0.0626       -0.0626                GLOB UNIF   MD-PLATE
```

```
LOAD Z 40554069        -0.0626       -0.0626                GLOB UNIF   MD-PLATE
LOAD Z 40564070        -0.0626       -0.0626                GLOB UNIF   MD-PLATE
LOAD Z 40684086        -0.0626       -0.0626                GLOB UNIF   MD-PLATE
LOAD Z 40694088        -0.0626       -0.0626                GLOB UNIF   MD-PLATE
LOAD Z 40704090        -0.0626       -0.0626                GLOB UNIF   MD-PLATE
LOAD Z 40724092        -0.0463       -0.0463                GLOB UNIF   MD-PLATE
LOAD Z 40674084        -0.0626       -0.0626                GLOB UNIF   MD-PLATE
LOAD Z 40604094        -0.0232       -0.0232                GLOB UNIF   MD-PLATE
LOAD Z 40574061        -0.0545       -0.0545                GLOB UNIF   MD-PLATE
LOAD Z 40614071        -0.0545       -0.0545                GLOB UNIF   MD-PLATE
LOAD Z 40514065        -0.0626       -0.0626                GLOB UNIF   MD-PLATE
LOAD Z 40524066        -0.0626       -0.0626                GLOB UNIF   MD-PLATE
LOAD Z 40654079        -0.0626       -0.0626                GLOB UNIF   MD-PLATE
LOAD Z 40664081        -0.0626       -0.0626                GLOB UNIF   MD-PLATE
LOAD Z 40714002        -0.0545       -0.0545                GLOB UNIF   MD-PLATE
LOAD Z 40504064        -0.0312       -0.0312                GLOB UNIF   MD-PLATE
LOAD Z 40644001        -0.0312       -0.0312                GLOB UNIF   MD-PLATE
*
***LDS1**    -13.000   -13.000    65.000   -13.000    13.000    65.000   -13.000
***LDS2**    -13.000    65.000   -13.000    13.000    65.000     0.017     0.017
***LDS3**      1.000  50   1   3   0   1105   -2EQUPPRESMD-PLATE
LOAD Z 40924105        -0.0463       -0.0463                GLOB UNIF   MD-PLATE
LOAD Z 40934106        -0.0463       -0.0463                GLOB UNIF   MD-PLATE
LOAD Z 41234143        -0.0463       -0.0463                GLOB UNIF   MD-PLATE
LOAD Z 41244144        -0.0463       -0.0463                GLOB UNIF   MD-PLATE
LOAD Z 40794109        -0.0505       -0.0505                GLOB UNIF   MD-PLATE
LOAD Z 40804110        -0.0505       -0.0505                GLOB UNIF   MD-PLATE
LOAD Z 41094129        -0.0505       -0.0505                GLOB UNIF   MD-PLATE
LOAD Z 41104130        -0.0505       -0.0505                GLOB UNIF   MD-PLATE
LOAD Z 41294153        -0.0505       -0.0505                GLOB UNIF   MD-PLATE
LOAD Z 41304154        -0.0505       -0.0505                GLOB UNIF   MD-PLATE
LOAD Z 41434166        -0.0463       -0.0463                GLOB UNIF   MD-PLATE
LOAD Z 41444167        -0.0463       -0.0463                GLOB UNIF   MD-PLATE
LOAD Z 41054123        -0.0463       -0.0463                GLOB UNIF   MD-PLATE
LOAD Z 41064124        -0.0463       -0.0463                GLOB UNIF   MD-PLATE
LOAD Z 40014100        -0.0253       -0.0253                GLOB UNIF   MD-PLATE
LOAD Z 40024104        -0.0772       -0.0772                GLOB UNIF   MD-PLATE
LOAD Z 40944107        -0.0232       -0.0232                GLOB UNIF   MD-PLATE
LOAD Z 41254145        -0.0232       -0.0232                GLOB UNIF   MD-PLATE
LOAD Z 41454168        -0.0232       -0.0232                GLOB UNIF   MD-PLATE
LOAD Z 41074125        -0.0232       -0.0232                GLOB UNIF   MD-PLATE
LOAD Z 40824101        -0.0590       -0.0590                GLOB UNIF   MD-PLATE
LOAD Z 40854102        -0.0891       -0.0891                GLOB UNIF   MD-PLATE
LOAD Z 40894103        -0.1095       -0.1095                GLOB UNIF   MD-PLATE
LOAD Z 41014111        -0.0590       -0.0590                GLOB UNIF   MD-PLATE
LOAD Z 41034112        -0.1095       -0.1095                GLOB UNIF   MD-PLATE
LOAD Z 41114131        -0.0590       -0.0590                GLOB UNIF   MD-PLATE
LOAD Z 41124121        -0.1095       -0.1095                GLOB UNIF   MD-PLATE
LOAD Z 41214132        -0.1095       -0.1095                GLOB UNIF   MD-PLATE
LOAD Z 41314139        -0.0590       -0.0590                GLOB UNIF   MD-PLATE
LOAD Z 41324141        -0.1095       -0.1095                GLOB UNIF   MD-PLATE
LOAD Z 41394156        -0.0590       -0.0590                GLOB UNIF   MD-PLATE
LOAD Z 41404159        -0.0891       -0.0891                GLOB UNIF   MD-PLATE
LOAD Z 41414163        -0.1095       -0.1095                GLOB UNIF   MD-PLATE
LOAD Z 41004108        -0.0253       -0.0253                GLOB UNIF   MD-PLATE
LOAD Z 41044114        -0.0772       -0.0772                GLOB UNIF   MD-PLATE
LOAD Z 41084113        -0.0253       -0.0253                GLOB UNIF   MD-PLATE
LOAD Z 41204126        -0.0253       -0.0253                GLOB UNIF   MD-PLATE
LOAD Z 41264128        -0.0253       -0.0253                GLOB UNIF   MD-PLATE
LOAD Z 41224127        -0.0772       -0.0772                GLOB UNIF   MD-PLATE
LOAD Z 41284138        -0.0253       -0.0253                GLOB UNIF   MD-PLATE
LOAD Z 41134120        -0.0253       -0.0253                GLOB UNIF   MD-PLATE
LOAD Z 41144122        -0.0772       -0.0772                GLOB UNIF   MD-PLATE
LOAD Z 41274142        -0.0772       -0.0772                GLOB UNIF   MD-PLATE
LOAD Z 41424004        -0.0772       -0.0772                GLOB UNIF   MD-PLATE
LOAD Z 41384003        -0.0253       -0.0253                GLOB UNIF   MD-PLATE
LOAD   4045                  -2.3320                       GLOB JOIN   STAIR
LOAD   4046                  -2.3320                       GLOB JOIN   STAIR
LOAD   3052                  -2.3320                       GLOB JOIN   STAIR
LOAD   3054                  -2.3320                       GLOB JOIN   STAIR
```

```
LOAD   3082                  -2.5410                      GLOB JOIN   STAIR
LOAD   3083                  -2.5410                      GLOB JOIN   STAIR
LOAD   2178                  -2.5410                      GLOB JOIN   STAIR
LOAD   2179                  -2.5410                      GLOB JOIN   STAIR
LOAD   2017                  -3.3110                      GLOB JOIN   STAIR
LOAD   2025                  -3.3110                      GLOB JOIN   STAIR
LOAD   1019                  -3.3110                      GLOB JOIN   STAIR
LOAD   1015                  -3.0360                      GLOB JOIN   STAIR
LOAD   1016                  -3.0360                      GLOB JOIN   STAIR
LOAD Z 10011039 3.25000-0.0243                            GLOB CONC   C150
LOAD   1060                  -16.798                      GLOB JOIN   C150
LOAD Z 40184037        -0.0505       -0.0505              GLOB UNIF   MD-PLATE
LOAD Z 40374048        -0.0505       -0.0505              GLOB UNIF   MD-PLATE
LOAD Z 40484062        -0.0505       -0.0505              GLOB UNIF   MD-PLATE
LOAD Z 40624075        -0.0505       -0.0505              GLOB UNIF   MD-PLATE
LOAD Z 40474000        -0.0569       -0.0569              GLOB UNIF   MD-PLATE
LOAD Z 40004074        -0.0569       -0.0569              GLOB UNIF   MD-PLATE
LOAD Z 20292155        -0.0330       -0.0330              GLOB UNIF   CD-HANDR
LOAD Z 21552030        -0.0330       -0.0330              GLOB UNIF   CD-HANDR
LOAD Z 40954096        -0.0330       -0.0330              GLOB UNIF   MD-HANDR
LOAD Z 40954096 0.08333-0.03303.33333-0.0330              GLOB UNIF   MD-HANDR
LOAD Z 21804210        -0.0548       -0.0548              GLOB UNIF   CD-PLATE
LOAD Z 42102207        -0.0548       -0.0548              GLOB UNIF   CD-PLATE
LOAD Z 21344211        -0.0821       -0.0821              GLOB UNIF   CD-PLATE
LOAD Z 42112180        -0.0821       -0.0821              GLOB UNIF   CD-PLATE
LOAD Z 20524222        -0.0554       -0.0554              GLOB UNIF   CD-PLATE
LOAD Z 42222083        -0.0554       -0.0554              GLOB UNIF   CD-PLATE
LOAD Z 20574223        -0.0828       -0.0828              GLOB UNIF   CD-PLATE
LOAD Z 42232088        -0.0828       -0.0828              GLOB UNIF   CD-PLATE
LOAD Z 21872251        -0.0548       -0.0548              GLOB UNIF   CD-PLATE
LOAD Z 22512215        -0.0548       -0.0548              GLOB UNIF   CD-PLATE
LOAD Z 41814333        -0.0626       -0.0626              GLOB UNIF   MD-PLATE
LOAD Z 43334202        -0.0626       -0.0626              GLOB UNIF   MD-PLATE
LOAD Z 41824334        -0.0626       -0.0626              GLOB UNIF   MD-PLATE
LOAD Z 43344203        -0.0626       -0.0626              GLOB UNIF   MD-PLATE
LOAD Z 41834335        -0.0626       -0.0626              GLOB UNIF   MD-PLATE
LOAD Z 43354204        -0.0626       -0.0626              GLOB UNIF   MD-PLATE
LOAD Z 41344340        -0.0631       -0.0631              GLOB UNIF   MD-PLATE
LOAD Z 43404147        -0.0631       -0.0631              GLOB UNIF   MD-PLATE
LOAD Z 41354341        -0.0569       -0.0569              GLOB UNIF   MD-PLATE
LOAD Z 43414148        -0.0569       -0.0569              GLOB UNIF   MD-PLATE
LOAD Z 41364342        -0.0505       -0.0505              GLOB UNIF   MD-PLATE
LOAD Z 43424149        -0.0505       -0.0505              GLOB UNIF   MD-PLATE
LOAD Z 40964343        -0.0631       -0.0631              GLOB UNIF   MD-PLATE
LOAD Z 43434116        -0.0631       -0.0631              GLOB UNIF   MD-PLATE
LOAD Z 40974344        -0.0569       -0.0569              GLOB UNIF   MD-PLATE
LOAD Z 43444117        -0.0569       -0.0569              GLOB UNIF   MD-PLATE
LOAD Z 40984345        -0.0505       -0.0505              GLOB UNIF   MD-PLATE
LOAD Z 43454118        -0.0505       -0.0505              GLOB UNIF   MD-PLATE
LOAD Z 22152355        -0.0548       -0.0548              GLOB UNIF   CD-PLATE
LOAD Z 23552239        -0.0548       -0.0548              GLOB UNIF   CD-PLATE
LOAD Z 22162356        -0.0548       -0.0548              GLOB UNIF   CD-PLATE
LOAD Z 23562240        -0.0548       -0.0548              GLOB UNIF   CD-PLATE
LOAD Z 22172357        -0.0548       -0.0548              GLOB UNIF   CD-PLATE
LOAD Z 23572241        -0.0548       -0.0548              GLOB UNIF   CD-PLATE
LOAD Z 22182358        -0.0548       -0.0548              GLOB UNIF   CD-PLATE
LOAD Z 23582242        -0.0548       -0.0548              GLOB UNIF   CD-PLATE
LOAD Z 22192359        -0.0856       -0.0856              GLOB UNIF   CD-PLATE
LOAD Z 23592243        -0.0856       -0.0856              GLOB UNIF   CD-PLATE
LOAD Z 21882361        -0.0548       -0.0548              GLOB UNIF   CD-PLATE
LOAD Z 23612216        -0.0548       -0.0548              GLOB UNIF   CD-PLATE
LOAD Z 21892362        -0.0548       -0.0548              GLOB UNIF   CD-PLATE
LOAD Z 23622217        -0.0548       -0.0548              GLOB UNIF   CD-PLATE
LOAD Z 21902363        -0.0548       -0.0548              GLOB UNIF   CD-PLATE
LOAD Z 23632218        -0.0548       -0.0548              GLOB UNIF   CD-PLATE
LOAD Z 21912364        -0.0856       -0.0856              GLOB UNIF   CD-PLATE
LOAD Z 23642219        -0.0856       -0.0856              GLOB UNIF   CD-PLATE
LOAD Z 21812365        -0.0554       -0.0554              GLOB UNIF   CD-PLATE
LOAD Z 23652202        -0.0554       -0.0554              GLOB UNIF   CD-PLATE
LOAD Z 22002366        -0.0561       -0.0561              GLOB UNIF   CD-PLATE
```

```
LOAD Z 23662210        -0.0561       -0.0561                GLOB UNIF   CD-PLATE
LOAD Z 21352367        -0.0554       -0.0554                GLOB UNIF   CD-PLATE
LOAD Z 23672181        -0.0554       -0.0554                GLOB UNIF   CD-PLATE
LOAD Z 21362368        -0.0561       -0.0561                GLOB UNIF   CD-PLATE
LOAD Z 23682182        -0.0561       -0.0561                GLOB UNIF   CD-PLATE
LOAD Z 20342374        -0.0330       -0.0330                GLOB UNIF   CD-HANDR
LOAD Z 23742035        -0.0330       -0.0330                GLOB UNIF   CD-HANDR
LOAD Z 20352376        -0.0891       -0.0891                GLOB UNIF   CD-PLATE
LOAD Z 23762065        -0.0891       -0.0891                GLOB UNIF   CD-PLATE
LOAD Z 20362377        -0.0617       -0.0617                GLOB UNIF   CD-PLATE
LOAD Z 23772066        -0.0617       -0.0617                GLOB UNIF   CD-PLATE
*
LOAD   B079                   -3.0360                     GLOB JOIN   STAIR
LOAD   B068                   -3.0360                     GLOB JOIN   STAIR
LOAD Z 40344356        -0.0545       -0.0545                GLOB UNIF   MD-PLATE
LOAD Z 43564057        -0.0545       -0.0545                GLOB UNIF   MD-PLATE
LOAD Z 10271300        -0.0801       -0.0801                GLOB UNIF   SCD-GRAT
LOAD Z 13001034        -0.0801       -0.0801                GLOB UNIF   SCD-GRAT
LOAD Z 10281301        -0.0858       -0.0858                GLOB UNIF   SCD-GRAT
LOAD Z 13011035        -0.0858       -0.0858                GLOB UNIF   SCD-GRAT
*
LOADCN 110
* 1. CAISSON RING
* 2. CONDUCTOR GUIDE
LOAD   C294                   -0.9025                     GLOB JOIN   CNDGUIDE
LOAD   C394                   -0.9025                     GLOB JOIN   CNDGUIDE
LOAD   C494                   -0.9025                     GLOB JOIN   CNDGUIDE
*
LOAD   C293                   -0.9025                     GLOB JOIN   CNDGUIDE
LOAD   C393                   -0.9025                     GLOB JOIN   CNDGUIDE
LOAD   C493                   -0.9025                     GLOB JOIN   CNDGUIDE
*
LOAD   C292                   -0.9025                     GLOB JOIN   CNDGUIDE
LOAD   C392                   -0.9025                     GLOB JOIN   CNDGUIDE
LOAD   C492                   -0.9025                     GLOB JOIN   CNDGUIDE
* 3. SLEEVE CENTRALIZER
LOAD   601                    -0.3226                     GLOB JOIN   CS-CNTRZ
LOAD   401                    -0.0950                     GLOB JOIN   CS-SHIM
LOAD   201                    -0.0950                     GLOB JOIN   CS-SHIM
*
LOAD   303                    -0.1122                     GLOB JOIN   PL-SHIM
LOAD   302                    -0.1122                     GLOB JOIN   PL-SHIM
LOAD   403                    -0.1122                     GLOB JOIN   PL-SHIM
LOAD   402                    -0.1122                     GLOB JOIN   PL-SHIM
LOAD   703                    -0.1122                     GLOB JOIN   PL-SHIM
LOAD   702                    -0.1122                     GLOB JOIN   PL-SHIM
LOAD   203                    -0.1122                     GLOB JOIN   PL-SHIM
LOAD   202                    -0.1122                     GLOB JOIN   PL-SHIM
* 4. CAISSON INSTALLATION GUIDE PLATE
LOAD   121                    -0.7742                     GLOB JOIN   CS-GUIDE
*LOAD   801                    -1.2410                     GLOB JOIN   CS-CROW
*LOAD   802                    -0.8170                     GLOB JOIN   PL-CROW
*LOAD   803                    -0.8170                     GLOB JOIN   PL-CROW
* 5. SLEEVE CAP PLATE
LOAD   902                    -0.0870                     GLOB JOIN   PL-CUP
LOAD   903                    -0.0870                     GLOB JOIN   PL-CUP
LOAD Z 203 201  10.2980-0.9284                            GLOB CONC   ANODE
LOAD Z 203 201  27.7690-0.9284                            GLOB CONC   ANODE
LOAD Z 201 202  10.2980-0.9284                            GLOB CONC   ANODE
LOAD Z 201 202  27.7690-0.9284                            GLOB CONC   ANODE
LOAD Z 203 202  13.9530-0.9284                            GLOB CONC   ANODE
LOAD Z 203 202  27.8980-0.9284                            GLOB CONC   ANODE
LOAD Z 203 202  41.8420-0.9284                            GLOB CONC   ANODE
LOAD Z 203 302  18.3770-0.9284                            GLOB CONC   ANODE
LOAD Z 203 302  33.4080-0.9284                            GLOB CONC   ANODE
LOAD Z 203 302  48.4080-0.9284                            GLOB CONC   ANODE
LOAD Z 201 302  23.0170-0.9284                            GLOB CONC   ANODE
LOAD Z 201 302  37.0540-0.9284                            GLOB CONC   ANODE
LOAD Z 201 303  23.0170-0.9284                            GLOB CONC   ANODE
LOAD Z 201 303  37.0540-0.9284                            GLOB CONC   ANODE
```

```
LOAD Z 202 302  28.4130-0.9284                                GLOB CONC   ANODE
LOAD Z 203 303  28.4130-0.9284                                GLOB CONC   ANODE
LOAD Z 303 302  10.6920-0.9284                                GLOB CONC   ANODE
LOAD Z 303 302  28.0260-0.9284                                GLOB CONC   ANODE
LOAD Z 302 403  17.4780-0.9284                                GLOB CONC   ANODE
LOAD Z 302 403  33.9440-0.9284                                GLOB CONC   ANODE
LOAD Z 302 402  22.3650-0.9284                                GLOB CONC   ANODE
LOAD Z 303 403  22.3650-0.9284                                GLOB CONC   ANODE
LOAD Z 401 402  6.27900-0.9284                                GLOB CONC   ANODE
LOAD Z 401 403  6.27900-0.9284                                GLOB CONC   ANODE
LOAD Z 403 402  11.5000-0.9284                                GLOB CONC   ANODE
LOAD Z 402 502  9.32600-0.9284                                GLOB CONC   ANODE
LOAD Z 403 503  9.32600-0.9284                                GLOB CONC   ANODE
LOAD Z 303 401  11.9440-0.9284                                GLOB CONC   ANODE
LOAD Z 303 401  25.2550-0.9284                                GLOB CONC   ANODE
LOAD Z 302 401  11.9440-0.9284                                GLOB CONC   ANODE
LOAD Z 302 401  25.2550-0.9284                                GLOB CONC   ANODE
LOAD Z 501 505  11.7500-0.9284                                GLOB CONC   ANODE
LOAD Z 205 206  11.0000-0.9284                                GLOB CONC   ANODE
LOAD Z 305 306  2.00000-0.9284                                GLOB CONC   ANODE
* 8. LIFTING PADEYE NEW
LOAD   811                    -3.0009                         GLOB JOIN   PADEYES
LOAD   211                    -2.2357                         GLOB JOIN   PADEYES
* 9. TRUNNION
LOAD   202                    -0.6017                         GLOB JOIN   TRUNION
LOAD   203                    -0.6017                         GLOB JOIN   TRUNION
* 11. RISER Ø6.625" CLAMP
LOAD   880                    -0.5784                         GLOB JOIN   CALMP6IN
LOAD   585                    -0.4984                         GLOB JOIN   CALMP6IN
LOAD   485                    -0.4984                         GLOB JOIN   CALMP6IN
LOAD   385                    -0.4984                         GLOB JOIN   CALMP6IN
LOAD   285                    -0.4984                         GLOB JOIN   CALMP6IN
LOAD   183                    -0.4984                         GLOB JOIN   CALMP6IN
LOAD   0026                   -0.4984                         GLOB JOIN   CALMP6IN
LOAD   181                    -0.4984                         GLOB JOIN   CALMP6IN
* 14. RISER Ø8.625" CLAMP
LOAD   860                    -0.6540                         GLOB JOIN   CALMP8IN
LOAD   560                    -0.5873                         GLOB JOIN   CALMP8IN
LOAD   460                    -0.5873                         GLOB JOIN   CALMP8IN
LOAD   360                    -0.5873                         GLOB JOIN   CALMP8IN
LOAD   260                    -0.5873                         GLOB JOIN   CALMP8IN
LOAD   163                    -0.5873                         GLOB JOIN   CALMP8IN
* 17. SUMP CAISSON GUIDE
LOAD   S02                    -0.0851                         GLOB JOIN   CS-GUIDE
LOAD   S04                    -0.0851                         GLOB JOIN   CS-GUIDE
LOAD Z B571B100        -0.0526       -0.0526                  GLOB UNIF   ST-BL-BL
LOAD Z B095B097        -0.0526       -0.0526                  GLOB UNIF   ST-BL-BL
LOAD Z B092B093        -0.3137       -0.3137                  GLOB UNIF   ST-BL-SC
LOAD Z B549B550        -0.0664       -0.0664                  GLOB UNIF   LADBLD
LOAD Z B064B065        -0.0807       -0.0807                  GLOB UNIF   LADBLD
LOAD Z B064B065        -0.0068       -0.0068                  GLOB UNIF   MSCBLD
LOAD Z B065B066        -0.0068       -0.0068                  GLOB UNIF   MSCBLD
LOAD Z B066B067        -0.0068       -0.0068                  GLOB UNIF   MSCBLD
LOAD Z B067B068        -0.0068       -0.0068                  GLOB UNIF   MSCBLD
LOAD Z B072B071        -0.0068       -0.0068                  GLOB UNIF   MSCBLD
LOAD Z B073B072        -0.0068       -0.0068                  GLOB UNIF   MSCBLD
LOAD Z B074B073        -0.0068       -0.0068                  GLOB UNIF   MSCBLD
LOAD Z B075B074        -0.0068       -0.0068                  GLOB UNIF   MSCBLD
LOAD Z B076B075        -0.0068       -0.0068                  GLOB UNIF   MSCBLD
LOAD Z B077B076        -0.0068       -0.0068                  GLOB UNIF   MSCBLD
LOAD Z B072B071        -0.2919       -0.2919                  GLOB UNIF   MSCBLD
LOAD Z B073B072        -0.2919       -0.2919                  GLOB UNIF   MSCBLD
LOAD Z B074B073        -0.2919       -0.2919                  GLOB UNIF   MSCBLD
LOAD Z B075B074        -0.2919       -0.2919                  GLOB UNIF   MSCBLD
LOAD Z B076B075        -0.2919       -0.2919                  GLOB UNIF   MSCBLD
LOAD Z B077B076        -0.2919       -0.2919                  GLOB UNIF   MSCBLD
LOAD Z B562B561        -0.0056       -0.0056                  GLOB UNIF   MSCBLD
LOAD Z B561B560        -0.0056       -0.0056                  GLOB UNIF   MSCBLD
LOAD Z B560B559        -0.0056       -0.0056                  GLOB UNIF   MSCBLD
LOAD Z B559B558        -0.0056       -0.0056                  GLOB UNIF   MSCBLD
```

```
LOAD Z B558B557        -0.0056       -0.0056                GLOB UNIF   MSCBLD
LOAD Z B557B556        -0.0056       -0.0056                GLOB UNIF   MSCBLD
LOAD Z B552B553        -0.0056       -0.0056                GLOB UNIF   MSCBLD
LOAD Z B550B551        -0.0056       -0.0056                GLOB UNIF   MSCBLD
LOAD Z B551B552        -0.0056       -0.0056                GLOB UNIF   MSCBLD
LOAD Z B549B550        -0.0056       -0.0056                GLOB UNIF   MSCBLD
LOAD Z B562B561        -0.3074       -0.3074                GLOB UNIF   MSCBLD
LOAD Z B561B560        -0.3074       -0.3074                GLOB UNIF   MSCBLD
LOAD Z B560B559        -0.3074       -0.3074                GLOB UNIF   MSCBLD
LOAD Z B559B558        -0.3074       -0.3074                GLOB UNIF   MSCBLD
LOAD Z B558B557        -0.3074       -0.3074                GLOB UNIF   MSCBLD
LOAD Z B557B556        -0.3074       -0.3074                GLOB UNIF   MSCBLD
* BOATLANDING SUPPORT
LOAD   B089                  -1.1384                      GLOB JOIN   BLDSUP
LOAD   B094                  -1.1384                      GLOB JOIN   BLDSUP
LOAD   B102                  -1.3401                      GLOB JOIN   BLDSUP
LOAD   B101                  -1.3401                      GLOB JOIN   BLDSUP
LOAD Z B549B550        -0.0120       -0.0120                GLOB UNIF   GRTBLDM
LOAD Z B549B554        -0.0120       -0.0120                GLOB UNIF   GRTBLDM
LOAD Z B550B551        -0.0120       -0.0120                GLOB UNIF   GRTBLDM
LOAD Z B550B558        -0.0120       -0.0120                GLOB UNIF   GRTBLDM
LOAD Z B551B552        -0.0120       -0.0120                GLOB UNIF   GRTBLDM
LOAD Z B551B560        -0.0120       -0.0120                GLOB UNIF   GRTBLDM
LOAD Z B552B100        -0.0120       -0.0120                GLOB UNIF   GRTBLDM
LOAD Z B552B553        -0.0120       -0.0120                GLOB UNIF   GRTBLDM
LOAD Z B553B565        -0.0120       -0.0120                GLOB UNIF   GRTBLDM
LOAD Z B555B554        -0.0120       -0.0120                GLOB UNIF   GRTBLDM
LOAD Z B556B555        -0.0120       -0.0120                GLOB UNIF   GRTBLDM
LOAD Z B557B556        -0.0120       -0.0120                GLOB UNIF   GRTBLDM
LOAD Z B558B557        -0.0120       -0.0120                GLOB UNIF   GRTBLDM
LOAD Z B559B558        -0.0120       -0.0120                GLOB UNIF   GRTBLDM
LOAD Z B560B559        -0.0120       -0.0120                GLOB UNIF   GRTBLDM
LOAD Z B561B560        -0.0120       -0.0120                GLOB UNIF   GRTBLDM
LOAD Z B562B561        -0.0120       -0.0120                GLOB UNIF   GRTBLDM
LOAD Z B563B562        -0.0120       -0.0120                GLOB UNIF   GRTBLDM
LOAD Z B564B563        -0.0120       -0.0120                GLOB UNIF   GRTBLDM
LOAD Z B565B564        -0.0120       -0.0120                GLOB UNIF   GRTBLDM
LOAD Z B567B553        -0.0120       -0.0120                GLOB UNIF   GRTBLDM
LOAD Z B567B571        -0.0120       -0.0120                GLOB UNIF   GRTBLDM
LOAD Z B571B100        -0.0120       -0.0120                GLOB UNIF   GRTBLDM
LOAD Z B550B555        -0.0120       -0.0120                GLOB UNIF   GRTBLDM
LOAD Z B551B563        -0.0120       -0.0120                GLOB UNIF   GRTBLDM
LOAD Z B560B550        -0.0120       -0.0120                GLOB UNIF   GRTBLDM
LOAD Z B571B552        -0.0120       -0.0120                GLOB UNIF   GRTBLDM
LOAD Z B069B080        -0.0078       -0.0078                GLOB UNIF   GRTBLDS
LOAD Z B064B080        -0.0078       -0.0078                GLOB UNIF   GRTBLDS
LOAD Z B080B095        -0.0078       -0.0078                GLOB UNIF   GRTBLDS
LOAD Z B095B097        -0.0078       -0.0078                GLOB UNIF   GRTBLDS
LOAD Z B096B095        -0.0078       -0.0078                GLOB UNIF   GRTBLDS
LOAD Z B098B099        -0.0078       -0.0078                GLOB UNIF   GRTBLDS
LOAD Z B099B097        -0.0078       -0.0078                GLOB UNIF   GRTBLDS
LOAD Z B064B065        -0.0078       -0.0078                GLOB UNIF   GRTBLDS
LOAD Z B064B069        -0.0078       -0.0078                GLOB UNIF   GRTBLDS
LOAD Z B064B096        -0.0078       -0.0078                GLOB UNIF   GRTBLDS
LOAD Z B065B066        -0.0078       -0.0078                GLOB UNIF   GRTBLDS
LOAD Z B066B073        -0.0078       -0.0078                GLOB UNIF   GRTBLDS
LOAD Z B069B070        -0.0078       -0.0078                GLOB UNIF   GRTBLDS
LOAD Z B071B070        -0.0078       -0.0078                GLOB UNIF   GRTBLDS
LOAD Z B096B098        -0.0078       -0.0078                GLOB UNIF   GRTBLDS
LOAD Z B070B066        -0.0078       -0.0078                GLOB UNIF   GRTBLDS
LOAD Z B072B071        -0.0078       -0.0078                GLOB UNIF   GRTBLDS
LOAD Z B073B072        -0.0078       -0.0078                GLOB UNIF   GRTBLDS
LOAD Z B066B067        -0.0078       -0.0078                GLOB UNIF   GRTBLDS
LOAD Z B067B068        -0.0078       -0.0078                GLOB UNIF   GRTBLDS
LOAD Z B067B075        -0.0078       -0.0078                GLOB UNIF   GRTBLDS
LOAD Z B068B079        -0.0078       -0.0078                GLOB UNIF   GRTBLDS
LOAD Z B077B078        -0.0078       -0.0078                GLOB UNIF   GRTBLDS
LOAD Z B078B079        -0.0078       -0.0078                GLOB UNIF   GRTBLDS
LOAD Z B067B078        -0.0078       -0.0078                GLOB UNIF   GRTBLDS
LOAD Z B074B073        -0.0078       -0.0078                GLOB UNIF   GRTBLDS
```

```
LOAD Z B075B074        -0.0078       -0.0078                GLOB UNIF   GRTBLDS
LOAD Z B076B075        -0.0078       -0.0078                GLOB UNIF   GRTBLDS
LOAD Z B077B076        -0.0078       -0.0078                GLOB UNIF   GRTBLDS
LOAD Z B068B091        -0.0078       -0.0078                GLOB UNIF   GRTBLDS
LOAD Z B090B091        -0.0078       -0.0078                GLOB UNIF   GRTBLDS
LOAD Z B091B093        -0.0078       -0.0078                GLOB UNIF   GRTBLDS
LOAD Z B092B093        -0.0078       -0.0078                GLOB UNIF   GRTBLDS
LOAD Z B068B092        -0.0078       -0.0078                GLOB UNIF   GRTBLDS
LOAD Z B067B090        -0.0078       -0.0078                GLOB UNIF   GRTBLDS
* BOATLANDING SAFETY BARRIER
LOAD   B553                   -0.6190                     GLOB JOIN   SFTBAR
LOAD   B054                   -0.6190                     GLOB JOIN   SFTBAR
LOAD   B521                   -0.6190                     GLOB JOIN   SFTBAR
LOAD   B023                   -0.6190                     GLOB JOIN   SFTBAR
LOAD Z S05 S06         -0.0343       -0.0343                GLOB UNIF   INSUMCS
LOAD Z S04 S05         -0.0343       -0.0343                GLOB UNIF   INSUMCS
LOAD Z S03 S04         -0.0343       -0.0343                GLOB UNIF   INSUMCS
LOAD Z S02 S03         -0.0343       -0.0343                GLOB UNIF   INSUMCS
LOAD Z S02 S01         -0.0343       -0.0343                GLOB UNIF   INSUMCS
LOAD   S05                    -0.4410                     GLOB JOIN   INSUMCS
* RISER PROTECTOR SUPPORT
LOAD   RG21                   -0.8759                     GLOB JOIN   RISERSUP
LOAD   RG22                   -0.8759                     GLOB JOIN   RISERSUP
*
*******************************************************************************
******************************PIPING  LOADS************************************
*******************************************************************************
LOADCN 115   1.100
LOAD Z 41134120        -0.0215       -0.0215                GLOB UNIF   MD-PIPE4
LOAD Z 41084109        -0.0215       -0.0215                GLOB UNIF   MD-PIPE4
LOAD Z 41014102        -0.0215       -0.0215                GLOB UNIF   MD-PIPE4
LOAD Z 41014111        -0.0215       -0.0215                GLOB UNIF   MD-PIPE4
LOAD Z 41034112        -0.0215       -0.0215                GLOB UNIF   MD-PIPE4
LOAD Z 41114112        -0.0215       -0.0215                GLOB UNIF   MD-PIPE4
LOAD Z 41094110        -0.0215       -0.0215                GLOB UNIF   MD-PIPE4
LOAD Z 41104111        -0.0215       -0.0215                GLOB UNIF   MD-PIPE4
LOAD Z 41004108        -0.0215       -0.0215                GLOB UNIF   MD-PIPE4
LOAD Z 40894103        -0.0215       -0.0215                GLOB UNIF   MD-PIPE4
LOAD Z 40854102        -0.0215       -0.0215                GLOB UNIF   MD-PIPE4
LOAD Z 40824101        -0.0215       -0.0215                GLOB UNIF   MD-PIPE4
LOAD Z 40804110        -0.0215       -0.0215                GLOB UNIF   MD-PIPE4
LOAD Z 40794109        -0.0215       -0.0215                GLOB UNIF   MD-PIPE4
LOAD Z 40014100        -0.0215       -0.0215                GLOB UNIF   MD-PIPE4
LOAD Z 40764099        -0.0259       -0.0259                GLOB UNIF   MD-PIPE3
LOAD Z 40754098        -0.0259       -0.0259                GLOB UNIF   MD-PIPE3
LOAD Z 40994119        -0.0259       -0.0259                GLOB UNIF   MD-PIPE3
LOAD Z 41194137        -0.0134       -0.0134                GLOB UNIF   MD-PIPE3
LOAD Z 41184136        -0.0134       -0.0134                GLOB UNIF   MD-PIPE3
LOAD Z 41374150        -0.0134       -0.0134                GLOB UNIF   MD-PIPE3
LOAD Z 41504174        -0.0134       -0.0134                GLOB UNIF   MD-PIPE3
LOAD Z 41494173        -0.0134       -0.0134                GLOB UNIF   MD-PIPE3
LOAD Z 41434166        -0.0450       -0.0450                GLOB UNIF   MD-PIPE1
LOAD Z 41444167        -0.0450       -0.0450                GLOB UNIF   MD-PIPE1
LOAD Z 41234143        -0.0450       -0.0450                GLOB UNIF   MD-PIPE1
LOAD Z 41244144        -0.0450       -0.0450                GLOB UNIF   MD-PIPE1
LOAD Z 41054123        -0.0601       -0.0601                GLOB UNIF   MD-PIPE1
LOAD Z 41064124        -0.0601       -0.0601                GLOB UNIF   MD-PIPE1
LOAD Z 40924105        -0.0476       -0.0476                GLOB UNIF   MD-PIPE1
LOAD Z 40934106        -0.0351       -0.0351                GLOB UNIF   MD-PIPE1
LOAD Z 40034175 4.00000-0.0124       -0.0124                GLOB UNIF   MD-PIPE2
LOAD Z 41534177 4.00000-0.0124       -0.0124                GLOB UNIF   MD-PIPE2
LOAD Z 41554178 4.00000-0.0124       -0.0124                GLOB UNIF   MD-PIPE2
LOAD Z 41584179 4.00000-0.0124       -0.0124                GLOB UNIF   MD-PIPE2
LOAD Z 41604181 4.00000-0.0124       -0.0124                GLOB UNIF   MD-PIPE2
LOAD Z 41624182 4.00000-0.0124       -0.0124                GLOB UNIF   MD-PIPE2
LOAD Z 41644183 4.00000-0.0124       -0.0124                GLOB UNIF   MD-PIPE2
LOAD Z 40044184 4.00000-0.0124       -0.0124                GLOB UNIF   MD-PIPE2
LOAD Z 41664186 4.00000-0.0100       -0.0100                GLOB UNIF   MD-PIPE2
LOAD Z 41674187 4.00000-0.0100       -0.0100                GLOB UNIF   MD-PIPE2
LOAD Z 41024005        -0.0215       -0.0215                GLOB UNIF   MD-PIPE4
```

```
LOAD Z 40054103        -0.0215       -0.0215                GLOB UNIF   MD-PIPE4
LOAD Z 41364342        -0.0134       -0.0134                GLOB UNIF   MD-PIPE3
LOAD Z 43424149        -0.0134       -0.0134                GLOB UNIF   MD-PIPE3
LOAD Z 40984345        -0.0134       -0.0134                GLOB UNIF   MD-PIPE3
LOAD Z 43454118        -0.0134       -0.0134                GLOB UNIF   MD-PIPE3
LOAD Z 40634076        -0.0479       -0.0479                GLOB UNIF   MD-PIPE5
LOAD Z 40644001        -0.0604       -0.0604                GLOB UNIF   MD-PIPE5
LOAD Z 40654079        -0.0354       -0.0354                GLOB UNIF   MD-PIPE5
LOAD Z 40004062        -0.0354       -0.0354                GLOB UNIF   MD-PIPE5
LOAD Z 40624063        -0.0354       -0.0354                GLOB UNIF   MD-PIPE5
LOAD Z 40634064        -0.0354       -0.0354                GLOB UNIF   MD-PIPE5
LOAD Z 40644065        -0.0354       -0.0354                GLOB UNIF   MD-PIPE5
LOAD Z 40654066        -0.0354       -0.0354                GLOB UNIF   MD-PIPE5
LOAD Z 40664067        -0.0354       -0.0354                GLOB UNIF   MD-PIPE5
LOAD Z 40684069        -0.0354       -0.0354                GLOB UNIF   MD-PIPE5
LOAD Z 40694070        -0.0354       -0.0354                GLOB UNIF   MD-PIPE5
LOAD Z 40714072        -0.0354       -0.0354                GLOB UNIF   MD-PIPE5
LOAD Z 40704071        -0.0354       -0.0354                GLOB UNIF   MD-PIPE5
LOAD Z 40684086        -0.0354       -0.0354                GLOB UNIF   MD-PIPE5
LOAD Z 40694088        -0.0354       -0.0354                GLOB UNIF   MD-PIPE5
LOAD Z 40704090        -0.0354       -0.0354                GLOB UNIF   MD-PIPE5
LOAD Z 40484062        -0.0354       -0.0354                GLOB UNIF   MD-PIPE5
LOAD Z 40494063        -0.0479       -0.0479                GLOB UNIF   MD-PIPE5
LOAD Z 40504064        -0.0604       -0.0604                GLOB UNIF   MD-PIPE5
LOAD Z 40524066        -0.0354       -0.0354                GLOB UNIF   MD-PIPE5
LOAD Z 40514065        -0.0354       -0.0354                GLOB UNIF   MD-PIPE5
LOAD Z 40374038        -0.0354       -0.0354                GLOB UNIF   MD-PIPE5
LOAD Z 40384039        -0.0604       -0.0604                GLOB UNIF   MD-PIPE5
LOAD Z 40394040        -0.0604       -0.0604                GLOB UNIF   MD-PIPE5
LOAD Z 40314032        -0.0354       -0.0354                GLOB UNIF   MD-PIPE5
LOAD Z 40324033        -0.0354       -0.0354                GLOB UNIF   MD-PIPE5
LOAD Z 40334034        -0.0354       -0.0354                GLOB UNIF   MD-PIPE5
LOAD Z 40544055        -0.0354       -0.0354                GLOB UNIF   MD-PIPE5
LOAD Z 40554056        -0.0354       -0.0354                GLOB UNIF   MD-PIPE5
LOAD Z 40564057        -0.0354       -0.0354                GLOB UNIF   MD-PIPE5
LOAD Z 40534067        -0.0354       -0.0354                GLOB UNIF   MD-PIPE5
LOAD Z 40314042        -0.0354       -0.0354                GLOB UNIF   MD-PIPE5
LOAD Z 40424054        -0.0354       -0.0354                GLOB UNIF   MD-PIPE5
LOAD Z 40324043        -0.0354       -0.0354                GLOB UNIF   MD-PIPE5
LOAD Z 40334044        -0.0354       -0.0354                GLOB UNIF   MD-PIPE5
LOAD Z 40444056        -0.0354       -0.0354                GLOB UNIF   MD-PIPE5
LOAD Z 40434055        -0.0354       -0.0354                GLOB UNIF   MD-PIPE5
LOAD Z 40434044        -0.0354       -0.0354                GLOB UNIF   MD-PIPE5
LOAD Z 40424043        -0.0354       -0.0354                GLOB UNIF   MD-PIPE5
LOAD Z 40544068        -0.0354       -0.0354                GLOB UNIF   MD-PIPE5
LOAD Z 40554069        -0.0354       -0.0354                GLOB UNIF   MD-PIPE5
LOAD Z 40564070        -0.0354       -0.0354                GLOB UNIF   MD-PIPE5
LOAD Z 40614071        -0.0354       -0.0354                GLOB UNIF   MD-PIPE5
LOAD Z 40574061        -0.0354       -0.0354                GLOB UNIF   MD-PIPE5
LOAD Z 40574058        -0.0354       -0.0354                GLOB UNIF   MD-PIPE5
LOAD Z 40584072        -0.0354       -0.0354                GLOB UNIF   MD-PIPE5
LOAD Z 40484049        -0.0354       -0.0354                GLOB UNIF   MD-PIPE5
LOAD Z 40494050        -0.0354       -0.0354                GLOB UNIF   MD-PIPE5
LOAD Z 40504051        -0.0354       -0.0354                GLOB UNIF   MD-PIPE5
LOAD Z 40514052        -0.0354       -0.0354                GLOB UNIF   MD-PIPE5
LOAD Z 40524053        -0.0354       -0.0354                GLOB UNIF   MD-PIPE5
LOAD Z 40534054        -0.0354       -0.0354                GLOB UNIF   MD-PIPE5
LOAD Z 40374048        -0.0354       -0.0354                GLOB UNIF   MD-PIPE5
LOAD Z 40384049        -0.0354       -0.0354                GLOB UNIF   MD-PIPE5
LOAD Z 40394041        -0.0354       -0.0354                GLOB UNIF   MD-PIPE5
LOAD Z 40414050        -0.0479       -0.0479                GLOB UNIF   MD-PIPE5
LOAD Z 40404051        -0.0354       -0.0354                GLOB UNIF   MD-PIPE5
LOAD Z 40474048        -0.0354       -0.0354                GLOB UNIF   MD-PIPE5
LOAD Z 40474000        -0.0354       -0.0354                GLOB UNIF   MD-PIPE5
LOAD Z 40664081        -0.0354       -0.0354                GLOB UNIF   MD-PIPE5
LOAD Z 40674084        -0.0354       -0.0354                GLOB UNIF   MD-PIPE5
LOAD Z 40174047 4.75000-0.0446       -0.0446                GLOB UNIF   MDPIPE6
LOAD Z 40224052 4.75000-0.0446       -0.0446                GLOB UNIF   MDPIPE6
LOAD Z 40344356        -0.0604       -0.0604                GLOB UNIF   MD-PIPE5
LOAD Z 43564057        -0.0604       -0.0604                GLOB UNIF   MD-PIPE5
```

```
LOADCN 116   1.100
LOAD Z 41134120        -0.0172       -0.0172                GLOB UNIF   MD-PIPE4
LOAD Z 41084109        -0.0172       -0.0172                GLOB UNIF   MD-PIPE4
LOAD Z 41014102        -0.0172       -0.0172                GLOB UNIF   MD-PIPE4
LOAD Z 41014111        -0.0172       -0.0172                GLOB UNIF   MD-PIPE4
LOAD Z 41034112        -0.0172       -0.0172                GLOB UNIF   MD-PIPE4
LOAD Z 41114112        -0.0172       -0.0172                GLOB UNIF   MD-PIPE4
LOAD Z 41094110        -0.0172       -0.0172                GLOB UNIF   MD-PIPE4
LOAD Z 41104111        -0.0172       -0.0172                GLOB UNIF   MD-PIPE4
LOAD Z 41004108        -0.0172       -0.0172                GLOB UNIF   MD-PIPE4
LOAD Z 40894103        -0.0172       -0.0172                GLOB UNIF   MD-PIPE4
LOAD Z 40854102        -0.0172       -0.0172                GLOB UNIF   MD-PIPE4
LOAD Z 40824101        -0.0172       -0.0172                GLOB UNIF   MD-PIPE4
LOAD Z 40804110        -0.0172       -0.0172                GLOB UNIF   MD-PIPE4
LOAD Z 40794109        -0.0172       -0.0172                GLOB UNIF   MD-PIPE4
LOAD Z 40014100        -0.0172       -0.0172                GLOB UNIF   MD-PIPE4
LOAD Z 40764099        -0.0207       -0.0207                GLOB UNIF   MD-PIPE3
LOAD Z 40754098        -0.0207       -0.0207                GLOB UNIF   MD-PIPE3
LOAD Z 40994119        -0.0207       -0.0207                GLOB UNIF   MD-PIPE3
LOAD Z 41194137        -0.0107       -0.0107                GLOB UNIF   MD-PIPE3
LOAD Z 41184136        -0.0107       -0.0107                GLOB UNIF   MD-PIPE3
LOAD Z 41374150        -0.0107       -0.0107                GLOB UNIF   MD-PIPE3
LOAD Z 41504174        -0.0107       -0.0107                GLOB UNIF   MD-PIPE3
LOAD Z 41494173        -0.0107       -0.0107                GLOB UNIF   MD-PIPE3
LOAD Z 41434166        -0.0360       -0.0360                GLOB UNIF   MD-PIPE1
LOAD Z 41444167        -0.0360       -0.0360                GLOB UNIF   MD-PIPE1
LOAD Z 41234143        -0.0360       -0.0360                GLOB UNIF   MD-PIPE1
LOAD Z 41244144        -0.0360       -0.0360                GLOB UNIF   MD-PIPE1
LOAD Z 41054123        -0.0481       -0.0481                GLOB UNIF   MD-PIPE1
LOAD Z 41064124        -0.0481       -0.0481                GLOB UNIF   MD-PIPE1
LOAD Z 40924105        -0.0381       -0.0381                GLOB UNIF   MD-PIPE1
LOAD Z 40934106        -0.0281       -0.0281                GLOB UNIF   MD-PIPE1
LOAD Z 40034175 4.00000-0.0099       -0.0099                GLOB UNIF   MD-PIPE2
LOAD Z 41534177 4.00000-0.0099       -0.0099                GLOB UNIF   MD-PIPE2
LOAD Z 41554178 4.00000-0.0099       -0.0099                GLOB UNIF   MD-PIPE2
LOAD Z 41584179 4.00000-0.0099       -0.0099                GLOB UNIF   MD-PIPE2
LOAD Z 41604181 4.00000-0.0099       -0.0099                GLOB UNIF   MD-PIPE2
LOAD Z 41624182 4.00000-0.0099       -0.0099                GLOB UNIF   MD-PIPE2
LOAD Z 41644183 4.00000-0.0099       -0.0099                GLOB UNIF   MD-PIPE2
LOAD Z 40044184 4.00000-0.0099       -0.0099                GLOB UNIF   MD-PIPE2
LOAD Z 41664186 4.00000-0.0080       -0.0080                GLOB UNIF   MD-PIPE2
LOAD Z 41674187 4.00000-0.0080       -0.0080                GLOB UNIF   MD-PIPE2
LOAD Z 41024005        -0.0172       -0.0172                GLOB UNIF   MD-PIPE4
LOAD Z 40054103        -0.0172       -0.0172                GLOB UNIF   MD-PIPE4
LOAD Z 41364342        -0.0107       -0.0107                GLOB UNIF   MD-PIPE3
LOAD Z 43424149        -0.0107       -0.0107                GLOB UNIF   MD-PIPE3
LOAD Z 40984345        -0.0107       -0.0107                GLOB UNIF   MD-PIPE3
LOAD Z 43454118        -0.0107       -0.0107                GLOB UNIF   MD-PIPE3
LOAD   2062                     -4.7244                    GLOB JOIN   PIPESUP
LOAD Z 40634076        -0.0383       -0.0383                GLOB UNIF   MD-PIPE5
LOAD Z 40644001        -0.0483       -0.0483                GLOB UNIF   MD-PIPE5
LOAD Z 40654079        -0.0283       -0.0283                GLOB UNIF   MD-PIPE5
LOAD Z 40004062        -0.0283       -0.0283                GLOB UNIF   MD-PIPE5
LOAD Z 40624063        -0.0283       -0.0283                GLOB UNIF   MD-PIPE5
LOAD Z 40634064        -0.0283       -0.0283                GLOB UNIF   MD-PIPE5
LOAD Z 40644065        -0.0283       -0.0283                GLOB UNIF   MD-PIPE5
LOAD Z 40654066        -0.0283       -0.0283                GLOB UNIF   MD-PIPE5
LOAD Z 40664067        -0.0283       -0.0283                GLOB UNIF   MD-PIPE5
LOAD Z 40684069        -0.0283       -0.0283                GLOB UNIF   MD-PIPE5
LOAD Z 40694070        -0.0283       -0.0283                GLOB UNIF   MD-PIPE5
LOAD Z 40714072        -0.0283       -0.0283                GLOB UNIF   MD-PIPE5
LOAD Z 40704071        -0.0283       -0.0283                GLOB UNIF   MD-PIPE5
LOAD Z 40684086        -0.0283       -0.0283                GLOB UNIF   MD-PIPE5
LOAD Z 40694088        -0.0283       -0.0283                GLOB UNIF   MD-PIPE5
LOAD Z 40704090        -0.0283       -0.0283                GLOB UNIF   MD-PIPE5
LOAD Z 40484062        -0.0283       -0.0283                GLOB UNIF   MD-PIPE5
LOAD Z 40494063        -0.0383       -0.0383                GLOB UNIF   MD-PIPE5
LOAD Z 40504064        -0.0483       -0.0483                GLOB UNIF   MD-PIPE5
LOAD Z 40524066        -0.0283       -0.0283                GLOB UNIF   MD-PIPE5
LOAD Z 40514065        -0.0283       -0.0283                GLOB UNIF   MD-PIPE5
```

```
LOAD Z 40374038        -0.0283       -0.0283                GLOB UNIF   MD-PIPE5
LOAD Z 40384039        -0.0483       -0.0483                GLOB UNIF   MD-PIPE5
LOAD Z 40394040        -0.0483       -0.0483                GLOB UNIF   MD-PIPE5
LOAD Z 40314032        -0.0283       -0.0283                GLOB UNIF   MD-PIPE5
LOAD Z 40324033        -0.0283       -0.0283                GLOB UNIF   MD-PIPE5
LOAD Z 40334034        -0.0283       -0.0283                GLOB UNIF   MD-PIPE5
LOAD Z 40544055        -0.0283       -0.0283                GLOB UNIF   MD-PIPE5
LOAD Z 40554056        -0.0283       -0.0283                GLOB UNIF   MD-PIPE5
LOAD Z 40564057        -0.0283       -0.0283                GLOB UNIF   MD-PIPE5
LOAD Z 40534067        -0.0283       -0.0283                GLOB UNIF   MD-PIPE5
LOAD Z 40314042        -0.0283       -0.0283                GLOB UNIF   MD-PIPE5
LOAD Z 40424054        -0.0283       -0.0283                GLOB UNIF   MD-PIPE5
LOAD Z 40324043        -0.0283       -0.0283                GLOB UNIF   MD-PIPE5
LOAD Z 40334044        -0.0283       -0.0283                GLOB UNIF   MD-PIPE5
LOAD Z 40444056        -0.0283       -0.0283                GLOB UNIF   MD-PIPE5
LOAD Z 40434055        -0.0283       -0.0283                GLOB UNIF   MD-PIPE5
LOAD Z 40434044        -0.0283       -0.0283                GLOB UNIF   MD-PIPE5
LOAD Z 40424043        -0.0283       -0.0283                GLOB UNIF   MD-PIPE5
LOAD Z 40544068        -0.0283       -0.0283                GLOB UNIF   MD-PIPE5
LOAD Z 40554069        -0.0283       -0.0283                GLOB UNIF   MD-PIPE5
LOAD Z 40564070        -0.0283       -0.0283                GLOB UNIF   MD-PIPE5
LOAD Z 40614071        -0.0283       -0.0283                GLOB UNIF   MD-PIPE5
LOAD Z 40574061        -0.0283       -0.0283                GLOB UNIF   MD-PIPE5
LOAD Z 40574058        -0.0283       -0.0283                GLOB UNIF   MD-PIPE5
LOAD Z 40584072        -0.0283       -0.0283                GLOB UNIF   MD-PIPE5
LOAD Z 40484049        -0.0283       -0.0283                GLOB UNIF   MD-PIPE5
LOAD Z 40494050        -0.0283       -0.0283                GLOB UNIF   MD-PIPE5
LOAD Z 40504051        -0.0283       -0.0283                GLOB UNIF   MD-PIPE5
LOAD Z 40514052        -0.0283       -0.0283                GLOB UNIF   MD-PIPE5
LOAD Z 40524053        -0.0283       -0.0283                GLOB UNIF   MD-PIPE5
LOAD Z 40534054        -0.0283       -0.0283                GLOB UNIF   MD-PIPE5
LOAD Z 40374048        -0.0283       -0.0283                GLOB UNIF   MD-PIPE5
LOAD Z 40384049        -0.0283       -0.0283                GLOB UNIF   MD-PIPE5
LOAD Z 40394041        -0.0283       -0.0283                GLOB UNIF   MD-PIPE5
LOAD Z 40414050        -0.0383       -0.0383                GLOB UNIF   MD-PIPE5
LOAD Z 40404051        -0.0283       -0.0283                GLOB UNIF   MD-PIPE5
LOAD Z 40474048        -0.0283       -0.0283                GLOB UNIF   MD-PIPE5
LOAD Z 40474000        -0.0283       -0.0283                GLOB UNIF   MD-PIPE5
LOAD Z 40664081        -0.0283       -0.0283                GLOB UNIF   MD-PIPE5
LOAD Z 40674084        -0.0283       -0.0283                GLOB UNIF   MD-PIPE5
LOAD Z 40174047 4.75000-0.0357       -0.0357                GLOB UNIF   MDPIPE6
LOAD Z 40224052 4.75000-0.0357       -0.0357                GLOB UNIF   MDPIPE6
LOAD Z 40344356        -0.0483       -0.0483                GLOB UNIF   MD-PIPE5
LOAD Z 43564057        -0.0483       -0.0483                GLOB UNIF   MD-PIPE5
LOADCN 120   1.100
LOAD Z 30223001        -0.1355       -0.1355                GLOB UNIF   MZ-PIPE1
LOAD Z 30303002        -0.1105       -0.1105                GLOB UNIF   MZ-PIPE1
LOAD Z 30263043        -0.1105       -0.1105                GLOB UNIF   MZ-PIPE1
LOAD Z 30193033        -0.1355       -0.1355                GLOB UNIF   MZ-PIPE1
LOAD Z 30323049        -0.1105       -0.1105                GLOB UNIF   MZ-PIPE1
LOAD Z 30273044        -0.1105       -0.1105                GLOB UNIF   MZ-PIPE1
LOAD Z 30283045        -0.1105       -0.1105                GLOB UNIF   MZ-PIPE1
LOAD Z 30293046        -0.1105       -0.1105                GLOB UNIF   MZ-PIPE1
LOAD Z 30203034        -0.1355       -0.1355                GLOB UNIF   MZ-PIPE1
LOAD Z 30213035        -0.1355       -0.1355                GLOB UNIF   MZ-PIPE1
LOAD Z 30233038        -0.1105       -0.1105                GLOB UNIF   MZ-PIPE1
LOAD Z 30243040        -0.1105       -0.1105                GLOB UNIF   MZ-PIPE1
LOAD Z 30253042        -0.1105       -0.1105                GLOB UNIF   MZ-PIPE1
LOAD Z 30313048        -0.1105       -0.1105                GLOB UNIF   MZ-PIPE1
LOAD Z 30183032        -0.1105       -0.1105                GLOB UNIF   MZ-PIPE1
LOAD Z 30163030        -0.1105       -0.1105                GLOB UNIF   MZ-PIPE1
LOAD Z 30123026        -0.1105       -0.1105                GLOB UNIF   MZ-PIPE1
LOAD Z 30133027        -0.1105       -0.1105                GLOB UNIF   MZ-PIPE1
LOAD Z 30143028        -0.1105       -0.1105                GLOB UNIF   MZ-PIPE1
LOAD Z 30153029        -0.1105       -0.1105                GLOB UNIF   MZ-PIPE1
LOAD Z 30173031        -0.1105       -0.1105                GLOB UNIF   MZ-PIPE1
LOAD Z 30463067        -0.1105       -0.1105                GLOB UNIF   MZ-PIPE1
LOAD Z 30013058        -0.1355       -0.1355                GLOB UNIF   MZ-PIPE1
LOAD Z 30413061        -0.1105       -0.1105                GLOB UNIF   MZ-PIPE1
LOAD Z 30433063        -0.1105       -0.1105                GLOB UNIF   MZ-PIPE1
```

```
LOAD Z 30453066        -0.1105       -0.1105                GLOB UNIF   MZ-PIPE1
LOAD Z 30343056        -0.1355       -0.1355                GLOB UNIF   MZ-PIPE1
LOAD Z 30353057        -0.1105       -0.1105                GLOB UNIF   MZ-PIPE1
LOAD Z 30373059        -0.1105       -0.1105                GLOB UNIF   MZ-PIPE1
LOAD Z 30393060        -0.1105       -0.1105                GLOB UNIF   MZ-PIPE1
LOAD Z 30443065        -0.1105       -0.1105                GLOB UNIF   MZ-PIPE1
LOAD Z 30333055        -0.1355       -0.1355                GLOB UNIF   MZ-PIPE1
LOAD Z 30333034        -0.1355       -0.1355                GLOB UNIF   MZ-PIPE1
LOAD Z 30013037        -0.1105       -0.1105                GLOB UNIF   MZ-PIPE1
LOAD Z 30413042        -0.1105       -0.1105                GLOB UNIF   MZ-PIPE1
LOAD Z 30433044        -0.1105       -0.1105                GLOB UNIF   MZ-PIPE1
LOAD Z 30453046        -0.1105       -0.1105                GLOB UNIF   MZ-PIPE1
LOAD Z 30343035        -0.1355       -0.1355                GLOB UNIF   MZ-PIPE1
LOAD Z 30353001        -0.1355       -0.1355                GLOB UNIF   MZ-PIPE1
LOAD Z 30373038        -0.1105       -0.1105                GLOB UNIF   MZ-PIPE1
LOAD Z 30393040        -0.1105       -0.1105                GLOB UNIF   MZ-PIPE1
LOAD Z 30383039        -0.1105       -0.1105                GLOB UNIF   MZ-PIPE1
LOAD Z 30403041        -0.1105       -0.1105                GLOB UNIF   MZ-PIPE1
LOAD Z 30423043        -0.1105       -0.1105                GLOB UNIF   MZ-PIPE1
LOAD Z 30443045        -0.1105       -0.1105                GLOB UNIF   MZ-PIPE1
LOAD Z 30463002        -0.1105       -0.1105                GLOB UNIF   MZ-PIPE1
LOAD Z 30623079        -0.1105       -0.1105                GLOB UNIF   MZ-PIPE1
LOAD Z 30643080        -0.1105       -0.1105                GLOB UNIF   MZ-PIPE1
LOAD Z 30613078        -0.1105       -0.1105                GLOB UNIF   MZ-PIPE1
LOAD Z 30603093        -0.1105       -0.1105                GLOB UNIF   MZ-PIPE1
LOAD Z 30603061        -0.1105       -0.1105                GLOB UNIF   MZ-PIPE1
LOAD Z 30613062        -0.1105       -0.1105                GLOB UNIF   MZ-PIPE1
LOAD Z 30633064        -0.1105       -0.1105                GLOB UNIF   MZ-PIPE1
LOAD Z 30653066        -0.1105       -0.1105                GLOB UNIF   MZ-PIPE1
LOAD Z 30623063        -0.1105       -0.1105                GLOB UNIF   MZ-PIPE1
LOAD Z 30483069        -0.0551       -0.0551                GLOB UNIF   MZ-PIPE2
LOAD Z 30493070        -0.0551       -0.0551                GLOB UNIF   MZ-PIPE2
LOAD Z 30693075        -0.0551       -0.0551                GLOB UNIF   MZ-PIPE2
LOAD Z 30713077        -0.0551       -0.0551                GLOB UNIF   MZ-PIPE2
LOAD Z 30773099        -0.0551       -0.0551                GLOB UNIF   MZ-PIPE2
LOAD Z 30763098        -0.0551       -0.0551                GLOB UNIF   MZ-PIPE2
LOAD Z 30973119        -0.0551       -0.0551                GLOB UNIF   MZ-PIPE2
LOAD Z 30963118        -0.0551       -0.0551                GLOB UNIF   MZ-PIPE2
LOAD Z 31193136        -0.0051       -0.0051                GLOB UNIF   MZ-PIPE2
LOAD Z 31183004        -0.0051       -0.0051                GLOB UNIF   MZ-PIPE2
LOAD Z 31363151        -0.0051       -0.0051                GLOB UNIF   MZ-PIPE2
LOAD Z 30043150        -0.0051       -0.0051                GLOB UNIF   MZ-PIPE2
LOAD Z 31043116        -0.0551       -0.0551                GLOB UNIF   MZ-PIPE2
LOAD Z 31033115        -0.0551       -0.0551                GLOB UNIF   MZ-PIPE2
LOAD Z 31023113        -0.0551       -0.0551                GLOB UNIF   MZ-PIPE2
LOAD Z 31013112        -0.0551       -0.0551                GLOB UNIF   MZ-PIPE2
LOAD Z 30933111        -0.0551       -0.0551                GLOB UNIF   MZ-PIPE2
LOAD Z 30663081        -0.0551       -0.0551                GLOB UNIF   MZ-PIPE2
LOAD Z 30813095        -0.0551       -0.0551                GLOB UNIF   MZ-PIPE2
LOAD Z 30953104        -0.0551       -0.0551                GLOB UNIF   MZ-PIPE2
LOAD Z 30783094        -0.0551       -0.0551                GLOB UNIF   MZ-PIPE2
LOAD Z 30943101        -0.0551       -0.0551                GLOB UNIF   MZ-PIPE2
LOAD Z 31233139 5.00000-0.31251.00000-0.3125                GLOB UNIF   MZ-PIPE3
LOAD Z 31243140 5.00000-0.31251.00000-0.3125                GLOB UNIF   MZ-PIPE3
LOADCN 121   1.100
LOAD Z 30223001        -0.1084       -0.1084                GLOB UNIF   MZ-PIPE1
LOAD Z 30303002        -0.0884       -0.0884                GLOB UNIF   MZ-PIPE1
LOAD Z 30263043        -0.0884       -0.0884                GLOB UNIF   MZ-PIPE1
LOAD Z 30193033        -0.1084       -0.1084                GLOB UNIF   MZ-PIPE1
LOAD Z 30323049        -0.0884       -0.0884                GLOB UNIF   MZ-PIPE1
LOAD Z 30273044        -0.0884       -0.0884                GLOB UNIF   MZ-PIPE1
LOAD Z 30283045        -0.0884       -0.0884                GLOB UNIF   MZ-PIPE1
LOAD Z 30293046        -0.0884       -0.0884                GLOB UNIF   MZ-PIPE1
LOAD Z 30203034        -0.1084       -0.1084                GLOB UNIF   MZ-PIPE1
LOAD Z 30213035        -0.1084       -0.1084                GLOB UNIF   MZ-PIPE1
LOAD Z 30233038        -0.0884       -0.0884                GLOB UNIF   MZ-PIPE1
LOAD Z 30243040        -0.0884       -0.0884                GLOB UNIF   MZ-PIPE1
LOAD Z 30253042        -0.0884       -0.0884                GLOB UNIF   MZ-PIPE1
LOAD Z 30313048        -0.0884       -0.0884                GLOB UNIF   MZ-PIPE1
LOAD Z 30183032        -0.0884       -0.0884                GLOB UNIF   MZ-PIPE1
```

```
LOAD Z 30163030        -0.0884       -0.0884                GLOB UNIF   MZ-PIPE1
LOAD Z 30123026        -0.0884       -0.0884                GLOB UNIF   MZ-PIPE1
LOAD Z 30133027        -0.0884       -0.0884                GLOB UNIF   MZ-PIPE1
LOAD Z 30143028        -0.0884       -0.0884                GLOB UNIF   MZ-PIPE1
LOAD Z 30153029        -0.0884       -0.0884                GLOB UNIF   MZ-PIPE1
LOAD Z 30173031        -0.0884       -0.0884                GLOB UNIF   MZ-PIPE1
LOAD Z 30463067        -0.0884       -0.0884                GLOB UNIF   MZ-PIPE1
LOAD Z 30013058        -0.1084       -0.1084                GLOB UNIF   MZ-PIPE1
LOAD Z 30413061        -0.0884       -0.0884                GLOB UNIF   MZ-PIPE1
LOAD Z 30433063        -0.0884       -0.0884                GLOB UNIF   MZ-PIPE1
LOAD Z 30453066        -0.0884       -0.0884                GLOB UNIF   MZ-PIPE1
LOAD Z 30343056        -0.1084       -0.1084                GLOB UNIF   MZ-PIPE1
LOAD Z 30353057        -0.0884       -0.0884                GLOB UNIF   MZ-PIPE1
LOAD Z 30373059        -0.0884       -0.0884                GLOB UNIF   MZ-PIPE1
LOAD Z 30393060        -0.0884       -0.0884                GLOB UNIF   MZ-PIPE1
LOAD Z 30443065        -0.0884       -0.0884                GLOB UNIF   MZ-PIPE1
LOAD Z 30333055        -0.1084       -0.1084                GLOB UNIF   MZ-PIPE1
LOAD Z 30333034        -0.1084       -0.1084                GLOB UNIF   MZ-PIPE1
LOAD Z 30013037        -0.0884       -0.0884                GLOB UNIF   MZ-PIPE1
LOAD Z 30413042        -0.0884       -0.0884                GLOB UNIF   MZ-PIPE1
LOAD Z 30433044        -0.0884       -0.0884                GLOB UNIF   MZ-PIPE1
LOAD Z 30453046        -0.0884       -0.0884                GLOB UNIF   MZ-PIPE1
LOAD Z 30343035        -0.1084       -0.1084                GLOB UNIF   MZ-PIPE1
LOAD Z 30353001        -0.1084       -0.1084                GLOB UNIF   MZ-PIPE1
LOAD Z 30373038        -0.0884       -0.0884                GLOB UNIF   MZ-PIPE1
LOAD Z 30393040        -0.0884       -0.0884                GLOB UNIF   MZ-PIPE1
LOAD Z 30383039        -0.0884       -0.0884                GLOB UNIF   MZ-PIPE1
LOAD Z 30403041        -0.0884       -0.0884                GLOB UNIF   MZ-PIPE1
LOAD Z 30423043        -0.0884       -0.0884                GLOB UNIF   MZ-PIPE1
LOAD Z 30443045        -0.0884       -0.0884                GLOB UNIF   MZ-PIPE1
LOAD Z 30463002        -0.0884       -0.0884                GLOB UNIF   MZ-PIPE1
LOAD Z 30623079        -0.0884       -0.0884                GLOB UNIF   MZ-PIPE1
LOAD Z 30643080        -0.0884       -0.0884                GLOB UNIF   MZ-PIPE1
LOAD Z 30613078        -0.0884       -0.0884                GLOB UNIF   MZ-PIPE1
LOAD Z 30603093        -0.0884       -0.0884                GLOB UNIF   MZ-PIPE1
LOAD Z 30603061        -0.0884       -0.0884                GLOB UNIF   MZ-PIPE1
LOAD Z 30613062        -0.0884       -0.0884                GLOB UNIF   MZ-PIPE1
LOAD Z 30633064        -0.0884       -0.0884                GLOB UNIF   MZ-PIPE1
LOAD Z 30653066        -0.0884       -0.0884                GLOB UNIF   MZ-PIPE1
LOAD Z 30623063        -0.0884       -0.0884                GLOB UNIF   MZ-PIPE1
LOAD Z 30483069        -0.0441       -0.0441                GLOB UNIF   MZ-PIPE2
LOAD Z 30493070        -0.0441       -0.0441                GLOB UNIF   MZ-PIPE2
LOAD Z 30693075        -0.0441       -0.0441                GLOB UNIF   MZ-PIPE2
LOAD Z 30713077        -0.0441       -0.0441                GLOB UNIF   MZ-PIPE2
LOAD Z 30773099        -0.0441       -0.0441                GLOB UNIF   MZ-PIPE2
LOAD Z 30763098        -0.0441       -0.0441                GLOB UNIF   MZ-PIPE2
LOAD Z 30973119        -0.0441       -0.0441                GLOB UNIF   MZ-PIPE2
LOAD Z 30963118        -0.0441       -0.0441                GLOB UNIF   MZ-PIPE2
LOAD Z 31193136        -0.0041       -0.0041                GLOB UNIF   MZ-PIPE2
LOAD Z 31183004        -0.0041       -0.0041                GLOB UNIF   MZ-PIPE2
LOAD Z 31363151        -0.0041       -0.0041                GLOB UNIF   MZ-PIPE2
LOAD Z 30043150        -0.0041       -0.0041                GLOB UNIF   MZ-PIPE2
LOAD Z 31043116        -0.0441       -0.0441                GLOB UNIF   MZ-PIPE2
LOAD Z 31033115        -0.0441       -0.0441                GLOB UNIF   MZ-PIPE2
LOAD Z 31023113        -0.0441       -0.0441                GLOB UNIF   MZ-PIPE2
LOAD Z 31013112        -0.0441       -0.0441                GLOB UNIF   MZ-PIPE2
LOAD Z 30933111        -0.0441       -0.0441                GLOB UNIF   MZ-PIPE2
LOAD Z 30663081        -0.0441       -0.0441                GLOB UNIF   MZ-PIPE2
LOAD Z 30813095        -0.0441       -0.0441                GLOB UNIF   MZ-PIPE2
LOAD Z 30953104        -0.0441       -0.0441                GLOB UNIF   MZ-PIPE2
LOAD Z 30783094        -0.0441       -0.0441                GLOB UNIF   MZ-PIPE2
LOAD Z 30943101        -0.0441       -0.0441                GLOB UNIF   MZ-PIPE2
LOAD Z 31233139 5.00000-0.25001.00000-0.2500                GLOB UNIF   MZ-PIPE3
LOAD Z 31243140 5.00000-0.25001.00000-0.2500                GLOB UNIF   MZ-PIPE3
LOADCN 125   1.100
LOAD   2062                   -4.7244                       GLOB JOIN   PIPESUP
LOAD Z 20892110        -0.2352       -0.2352                GLOB UNIF   CD-PIPE1
LOAD Z 20942105        -0.1103       -0.1103                GLOB UNIF   CD-PIPE1
LOAD Z 20012088        -0.2602       -0.2602                GLOB UNIF   CD-PIPE1
LOAD Z 20882089        -0.2602       -0.2602                GLOB UNIF   CD-PIPE1
```

```
LOAD Z 20892090        -0.2602       -0.2602                GLOB UNIF   CD-PIPE1
LOAD Z 20902091        -0.2602       -0.2602                GLOB UNIF   CD-PIPE1
LOAD Z 20912092        -0.2602       -0.2602                GLOB UNIF   CD-PIPE1
LOAD Z 20922093        -0.1103       -0.1103                GLOB UNIF   CD-PIPE1
LOAD Z 20932094        -0.1103       -0.1103                GLOB UNIF   CD-PIPE1
LOAD Z 20942095        -0.1103       -0.1103                GLOB UNIF   CD-PIPE1
LOAD Z 20952002        -0.1103       -0.1103                GLOB UNIF   CD-PIPE1
LOAD Z 20752001        -0.2728       -0.2728                GLOB UNIF   CD-PIPE1
LOAD Z 20562075        -0.2728       -0.2728                GLOB UNIF   CD-PIPE1
LOAD Z 20262046        -0.2728       -0.2728                GLOB UNIF   CD-PIPE1
LOAD Z 20462056        -0.2728       -0.2728                GLOB UNIF   CD-PIPE1
LOAD Z 20574223        -0.2352       -0.2352                GLOB UNIF   CD-PIPE1
LOAD Z 42232088        -0.2352       -0.2352                GLOB UNIF   CD-PIPE1
LOAD Z 20582089        -0.2352       -0.2352                GLOB UNIF   CD-PIPE1
LOAD Z 20592090        -0.2352       -0.2352                GLOB UNIF   CD-PIPE1
LOAD Z 20602092        -0.2352       -0.2352                GLOB UNIF   CD-PIPE1
LOAD Z 20612093        -0.2352       -0.2352                GLOB UNIF   CD-PIPE1
LOAD Z 20272057        -0.2352       -0.2352                GLOB UNIF   CD-PIPE1
LOAD Z 20282058        -0.2352       -0.2352                GLOB UNIF   CD-PIPE1
LOAD Z 20292059        -0.2352       -0.2352                GLOB UNIF   CD-PIPE1
LOAD Z 20302060        -0.2352       -0.2352                GLOB UNIF   CD-PIPE1
LOAD Z 20312061        -0.2352       -0.2352                GLOB UNIF   CD-PIPE1
LOAD Z 20322062        -0.2352       -0.2352                GLOB UNIF   CD-PIPE1
LOAD Z 20562057        -0.2352       -0.2352                GLOB UNIF   CD-PIPE1
LOAD Z 20572058        -0.2352       -0.2352                GLOB UNIF   CD-PIPE1
LOAD Z 20582059        -0.2352       -0.2352                GLOB UNIF   CD-PIPE1
LOAD Z 20592060        -0.2352       -0.2352                GLOB UNIF   CD-PIPE1
LOAD Z 20602061        -0.2352       -0.2352                GLOB UNIF   CD-PIPE1
LOAD Z 20612062        -0.2352       -0.2352                GLOB UNIF   CD-PIPE1
LOAD Z 21862214 8.33333-0.3704       -0.3704                GLOB UNIF   CD-PIPE3
LOAD Z 21852213 8.33333-0.3704       -0.3704                GLOB UNIF   CD-PIPE3
LOAD Z 20032212 8.33333-0.3704       -0.3704                GLOB UNIF   CD-PIPE3
LOAD Z 42162211 0.91667-0.4166       -0.4166                GLOB UNIF   CD-PIPE3
LOAD Z 23662210 0.91667-0.4166       -0.4166                GLOB UNIF   CD-PIPE3
LOAD Z 21102140        -0.0355       -0.0855                GLOB UNIF   CD-PIPE4
LOAD Z 21402162        -0.0355       -0.0855                GLOB UNIF   CD-PIPE4
LOAD Z 21622186        -0.0355       -0.0855                GLOB UNIF   CD-PIPE4
LOAD Z 21392170        -0.0355       -0.0855                GLOB UNIF   CD-PIPE4
LOAD Z 21022139        -0.0355       -0.0855                GLOB UNIF   CD-PIPE4
LOAD Z 20882102        -0.0355       -0.0855                GLOB UNIF   CD-PIPE4
LOAD Z 20912122        -0.0355       -0.0855                GLOB UNIF   CD-PIPE4
LOAD Z 21032123        -0.0355       -0.0855                GLOB UNIF   CD-PIPE4
LOAD Z 20252055        -0.0603       -0.0603                GLOB UNIF   CD-PIPE5
LOAD Z 20552074        -0.0603       -0.0603                GLOB UNIF   CD-PIPE5
LOAD Z 20542055        -0.0603       -0.0603                GLOB UNIF   CD-PIPE5
LOAD Z 20532054        -0.0603       -0.0603                GLOB UNIF   CD-PIPE5
LOAD Z 20522053        -0.0603       -0.0603                GLOB UNIF   CD-PIPE5
LOAD Z 20242053        -0.0603       -0.0603                GLOB UNIF   CD-PIPE5
LOAD Z 20232045        -0.0603       -0.0603                GLOB UNIF   CD-PIPE5
LOAD Z 20524222        -0.0603       -0.0603                GLOB UNIF   CD-PIPE5
LOAD Z 42222083        -0.0603       -0.0603                GLOB UNIF   CD-PIPE5
LOAD Z 20832116        -0.0603       -0.0603                GLOB UNIF   CD-PIPE5
LOAD Z 21162135        -0.0603       -0.0603                GLOB UNIF   CD-PIPE5
LOAD Z 21352367        -0.0603       -0.0603                GLOB UNIF   CD-PIPE5
LOAD Z 23672181        -0.0603       -0.0603                GLOB UNIF   CD-PIPE5
LOAD Z 21812365        -0.0603       -0.0603                GLOB UNIF   CD-PIPE5
LOAD Z 21822200        -0.0603       -0.0603                GLOB UNIF   CD-PIPE5
LOAD Z 23682182        -0.0603       -0.0603                GLOB UNIF   CD-PIPE5
LOAD Z 21362368        -0.0603       -0.0603                GLOB UNIF   CD-PIPE5
LOAD Z 21172136        -0.0603       -0.0603                GLOB UNIF   CD-PIPE5
LOAD Z 20842117        -0.0603       -0.0603                GLOB UNIF   CD-PIPE5
LOAD Z 20722084        -0.0603       -0.0603                GLOB UNIF   CD-PIPE5
LOAD Z 20532072        -0.0603       -0.0603                GLOB UNIF   CD-PIPE5
LOAD Z 23652202        -0.0603       -0.0603                GLOB UNIF   CD-PIPE5
LOAD Z 22022209        -0.0603       -0.0603                GLOB UNIF   CD-PIPE5
LOAD Z 20192048        -0.0211       -0.0211                GLOB UNIF   CD-PIPE6
LOAD Z 20202049        -0.0211       -0.0211                GLOB UNIF   CD-PIPE6
LOAD Z 20212050        -0.0211       -0.0211                GLOB UNIF   CD-PIPE6
LOAD Z 20482079        -0.0211       -0.0211                GLOB UNIF   CD-PIPE6
LOAD Z 20492080        -0.0211       -0.0211                GLOB UNIF   CD-PIPE6
```

```
LOAD Z 20502081        -0.0211       -0.0211                GLOB UNIF   CD-PIPE6
LOAD Z 20512082        -0.0211       -0.0211                GLOB UNIF   CD-PIPE6
LOAD Z 20792112        -0.0211       -0.0211                GLOB UNIF   CD-PIPE6
LOAD Z 21122131        -0.0211       -0.0211                GLOB UNIF   CD-PIPE6
LOAD Z 21132132        -0.0211       -0.0211                GLOB UNIF   CD-PIPE6
LOAD Z 20802113        -0.0211       -0.0211                GLOB UNIF   CD-PIPE6
LOAD Z 20812114        -0.0211       -0.0211                GLOB UNIF   CD-PIPE6
LOAD Z 20822115        -0.0211       -0.0211                GLOB UNIF   CD-PIPE6
LOAD Z 21152134        -0.0211       -0.0211                GLOB UNIF   CD-PIPE6
LOAD Z 21142133        -0.0211       -0.0211                GLOB UNIF   CD-PIPE6
LOAD Z 20412051        -0.0211       -0.0211                GLOB UNIF   CD-PIPE6
LOAD Z 20222041        -0.0211       -0.0211                GLOB UNIF   CD-PIPE6
LOAD Z 20792080        -0.1481       -0.1481                GLOB UNIF   CD-PIPE7
LOAD Z 20802081        -0.1481       -0.1481                GLOB UNIF   CD-PIPE7
LOAD Z 20812082        -0.1481       -0.1481                GLOB UNIF   CD-PIPE7
LOAD Z 20822083        -0.1481       -0.1481                GLOB UNIF   CD-PIPE7
LOAD Z 20832084        -0.1481       -0.1481                GLOB UNIF   CD-PIPE7
LOAD Z 20482049        -0.1481       -0.1481                GLOB UNIF   CD-PIPE7
LOAD Z 20492050        -0.1481       -0.1481                GLOB UNIF   CD-PIPE7
LOAD Z 20502051        -0.1481       -0.1481                GLOB UNIF   CD-PIPE7
LOAD Z 20512052        -0.1481       -0.1481                GLOB UNIF   CD-PIPE7
LOAD Z 20452052        -0.1481       -0.1481                GLOB UNIF   CD-PIPE7
LOAD Z 20842085        -0.1481       -0.1481                GLOB UNIF   CD-PIPE7
LOAD Z 20852086        -0.1481       -0.1481                GLOB UNIF   CD-PIPE7
LOAD Z 20862001        -0.1481       -0.1481                GLOB UNIF   CD-PIPE7
LOAD Z 20022108        -0.0130       -0.0130                GLOB UNIF   CD-PIPE2
LOAD Z 20972148        -0.0130       -0.0130                GLOB UNIF   CD-PIPE2
LOAD Z 21082128        -0.0130       -0.0130                GLOB UNIF   CD-PIPE2
LOAD Z 21282147        -0.0130       -0.0130                GLOB UNIF   CD-PIPE2
LOAD Z 21472156        -0.0130       -0.0130                GLOB UNIF   CD-PIPE2
LOAD Z 21482193        -0.0130       -0.0130                GLOB UNIF   CD-PIPE2
LOAD Z 21562169        -0.0130       -0.0130                GLOB UNIF   CD-PIPE2
LOAD Z 21692004        -0.0130       -0.0130                GLOB UNIF   CD-PIPE2
LOAD Z 20042250        -0.0130       -0.0130                GLOB UNIF   CD-PIPE2
LOAD Z 21992221        -0.0130       -0.0130                GLOB UNIF   CD-PIPE2
LOAD Z 22502220        -0.0130       -0.0130                GLOB UNIF   CD-PIPE2
LOAD Z 23642219        -0.0130       -0.0130                GLOB UNIF   CD-PIPE2
LOAD Z 23632218        -0.0130       -0.0130                GLOB UNIF   CD-PIPE2
LOAD Z 23622217        -0.0130       -0.0130                GLOB UNIF   CD-PIPE2
LOAD Z 23612216        -0.0130       -0.0130                GLOB UNIF   CD-PIPE2
LOAD Z 22512215        -0.0130       -0.0130                GLOB UNIF   CD-PIPE2
LOADCN 126   1.100
LOAD   2062                   -3.7795                     GLOB JOIN   PIPESUP
LOAD Z 20892110        -0.1882       -0.1882                GLOB UNIF   CD-PIPE1
LOAD Z 20942105        -0.0882       -0.0882                GLOB UNIF   CD-PIPE1
LOAD Z 20012088        -0.2082       -0.2082                GLOB UNIF   CD-PIPE1
LOAD Z 20882089        -0.2082       -0.2082                GLOB UNIF   CD-PIPE1
LOAD Z 20892090        -0.2082       -0.2082                GLOB UNIF   CD-PIPE1
LOAD Z 20902091        -0.2082       -0.2082                GLOB UNIF   CD-PIPE1
LOAD Z 20912092        -0.2082       -0.2082                GLOB UNIF   CD-PIPE1
LOAD Z 20922093        -0.0882       -0.0882                GLOB UNIF   CD-PIPE1
LOAD Z 20932094        -0.0882       -0.0882                GLOB UNIF   CD-PIPE1
LOAD Z 20942095        -0.0882       -0.0882                GLOB UNIF   CD-PIPE1
LOAD Z 20952002        -0.0882       -0.0882                GLOB UNIF   CD-PIPE1
LOAD Z 20752001        -0.2182       -0.2182                GLOB UNIF   CD-PIPE1
LOAD Z 20562075        -0.2182       -0.2182                GLOB UNIF   CD-PIPE1
LOAD Z 20262046        -0.2182       -0.2182                GLOB UNIF   CD-PIPE1
LOAD Z 20462056        -0.2182       -0.2182                GLOB UNIF   CD-PIPE1
LOAD Z 20574223        -0.1882       -0.1882                GLOB UNIF   CD-PIPE1
LOAD Z 42232088        -0.1882       -0.1882                GLOB UNIF   CD-PIPE1
LOAD Z 20582089        -0.1882       -0.1882                GLOB UNIF   CD-PIPE1
LOAD Z 20592090        -0.1882       -0.1882                GLOB UNIF   CD-PIPE1
LOAD Z 20602092        -0.1882       -0.1882                GLOB UNIF   CD-PIPE1
LOAD Z 20612093        -0.1882       -0.1882                GLOB UNIF   CD-PIPE1
LOAD Z 20272057        -0.1882       -0.1882                GLOB UNIF   CD-PIPE1
LOAD Z 20282058        -0.1882       -0.1882                GLOB UNIF   CD-PIPE1
LOAD Z 20292059        -0.1882       -0.1882                GLOB UNIF   CD-PIPE1
LOAD Z 20302060        -0.1882       -0.1882                GLOB UNIF   CD-PIPE1
LOAD Z 20312061        -0.1882       -0.1882                GLOB UNIF   CD-PIPE1
LOAD Z 20322062        -0.1882       -0.1882                GLOB UNIF   CD-PIPE1
```

```
LOAD Z 20562057        -0.1882       -0.1882                GLOB UNIF   CD-PIPE1
LOAD Z 20572058        -0.1882       -0.1882                GLOB UNIF   CD-PIPE1
LOAD Z 20582059        -0.1882       -0.1882                GLOB UNIF   CD-PIPE1
LOAD Z 20592060        -0.1882       -0.1882                GLOB UNIF   CD-PIPE1
LOAD Z 20602061        -0.1882       -0.1882                GLOB UNIF   CD-PIPE1
LOAD Z 20612062        -0.1882       -0.1882                GLOB UNIF   CD-PIPE1
LOAD Z 21862214 8.33333-0.2963       -0.2963                GLOB UNIF   CD-PIPE3
LOAD Z 21852213 8.33333-0.2963       -0.2963                GLOB UNIF   CD-PIPE3
LOAD Z 20032212 8.33333-0.2963       -0.2963                GLOB UNIF   CD-PIPE3
LOAD Z 42162211 0.91667-0.3333       -0.3333                GLOB UNIF   CD-PIPE3
LOAD Z 23662210 0.91667-0.3333       -0.3333                GLOB UNIF   CD-PIPE3
LOAD Z 21102140        -0.0284       -0.0684                GLOB UNIF   CD-PIPE4
LOAD Z 21402162        -0.0284       -0.0684                GLOB UNIF   CD-PIPE4
LOAD Z 21622186        -0.0284       -0.0684                GLOB UNIF   CD-PIPE4
LOAD Z 21392170        -0.0284       -0.0684                GLOB UNIF   CD-PIPE4
LOAD Z 21022139        -0.0284       -0.0684                GLOB UNIF   CD-PIPE4
LOAD Z 20882102        -0.0284       -0.0684                GLOB UNIF   CD-PIPE4
LOAD Z 20912122        -0.0284       -0.0684                GLOB UNIF   CD-PIPE4
LOAD Z 21032123        -0.0284       -0.0684                GLOB UNIF   CD-PIPE4
LOAD Z 20252055        -0.0482       -0.0482                GLOB UNIF   CD-PIPE5
LOAD Z 20552074        -0.0482       -0.0482                GLOB UNIF   CD-PIPE5
LOAD Z 20542055        -0.0482       -0.0482                GLOB UNIF   CD-PIPE5
LOAD Z 20532054        -0.0482       -0.0482                GLOB UNIF   CD-PIPE5
LOAD Z 20522053        -0.0482       -0.0482                GLOB UNIF   CD-PIPE5
LOAD Z 20242053        -0.0482       -0.0482                GLOB UNIF   CD-PIPE5
LOAD Z 20232045        -0.0482       -0.0482                GLOB UNIF   CD-PIPE5
LOAD Z 20524222        -0.0482       -0.0482                GLOB UNIF   CD-PIPE5
LOAD Z 42222083        -0.0482       -0.0482                GLOB UNIF   CD-PIPE5
LOAD Z 20832116        -0.0482       -0.0482                GLOB UNIF   CD-PIPE5
LOAD Z 21162135        -0.0482       -0.0482                GLOB UNIF   CD-PIPE5
LOAD Z 21352367        -0.0482       -0.0482                GLOB UNIF   CD-PIPE5
LOAD Z 23672181        -0.0482       -0.0482                GLOB UNIF   CD-PIPE5
LOAD Z 21812365        -0.0482       -0.0482                GLOB UNIF   CD-PIPE5
LOAD Z 21822200        -0.0482       -0.0482                GLOB UNIF   CD-PIPE5
LOAD Z 23682182        -0.0482       -0.0482                GLOB UNIF   CD-PIPE5
LOAD Z 21362368        -0.0482       -0.0482                GLOB UNIF   CD-PIPE5
LOAD Z 21172136        -0.0482       -0.0482                GLOB UNIF   CD-PIPE5
LOAD Z 20842117        -0.0482       -0.0482                GLOB UNIF   CD-PIPE5
LOAD Z 20722084        -0.0482       -0.0482                GLOB UNIF   CD-PIPE5
LOAD Z 20532072        -0.0482       -0.0482                GLOB UNIF   CD-PIPE5
LOAD Z 23652202        -0.0482       -0.0482                GLOB UNIF   CD-PIPE5
LOAD Z 22022209        -0.0482       -0.0482                GLOB UNIF   CD-PIPE5
LOAD Z 20192048        -0.0169       -0.0169                GLOB UNIF   CD-PIPE6
LOAD Z 20202049        -0.0169       -0.0169                GLOB UNIF   CD-PIPE6
LOAD Z 20212050        -0.0169       -0.0169                GLOB UNIF   CD-PIPE6
LOAD Z 20482079        -0.0169       -0.0169                GLOB UNIF   CD-PIPE6
LOAD Z 20492080        -0.0169       -0.0169                GLOB UNIF   CD-PIPE6
LOAD Z 20502081        -0.0169       -0.0169                GLOB UNIF   CD-PIPE6
LOAD Z 20512082        -0.0169       -0.0169                GLOB UNIF   CD-PIPE6
LOAD Z 20792112        -0.0169       -0.0169                GLOB UNIF   CD-PIPE6
LOAD Z 21122131        -0.0169       -0.0169                GLOB UNIF   CD-PIPE6
LOAD Z 21132132        -0.0169       -0.0169                GLOB UNIF   CD-PIPE6
LOAD Z 20802113        -0.0169       -0.0169                GLOB UNIF   CD-PIPE6
LOAD Z 20812114        -0.0169       -0.0169                GLOB UNIF   CD-PIPE6
LOAD Z 20822115        -0.0169       -0.0169                GLOB UNIF   CD-PIPE6
LOAD Z 21152134        -0.0169       -0.0169                GLOB UNIF   CD-PIPE6
LOAD Z 21142133        -0.0169       -0.0169                GLOB UNIF   CD-PIPE6
LOAD Z 20412051        -0.0169       -0.0169                GLOB UNIF   CD-PIPE6
LOAD Z 20222041        -0.0169       -0.0169                GLOB UNIF   CD-PIPE6
LOAD Z 20792080        -0.1185       -0.1185                GLOB UNIF   CD-PIPE7
LOAD Z 20802081        -0.1185       -0.1185                GLOB UNIF   CD-PIPE7
LOAD Z 20812082        -0.1185       -0.1185                GLOB UNIF   CD-PIPE7
LOAD Z 20822083        -0.1185       -0.1185                GLOB UNIF   CD-PIPE7
LOAD Z 20832084        -0.1185       -0.1185                GLOB UNIF   CD-PIPE7
LOAD Z 20482049        -0.1185       -0.1185                GLOB UNIF   CD-PIPE7
LOAD Z 20492050        -0.1185       -0.1185                GLOB UNIF   CD-PIPE7
LOAD Z 20502051        -0.1185       -0.1185                GLOB UNIF   CD-PIPE7
LOAD Z 20512052        -0.1185       -0.1185                GLOB UNIF   CD-PIPE7
LOAD Z 20452052        -0.1185       -0.1185                GLOB UNIF   CD-PIPE7
LOAD Z 20842085        -0.1185       -0.1185                GLOB UNIF   CD-PIPE7
```

```
LOAD Z 20852086        -0.1185       -0.1185                GLOB UNIF   CD-PIPE7
LOAD Z 20862001        -0.1185       -0.1185                GLOB UNIF   CD-PIPE7
LOAD Z 20022108        -0.0104       -0.0104                GLOB UNIF   CD-PIPE2
LOAD Z 20972148        -0.0104       -0.0104                GLOB UNIF   CD-PIPE2
LOAD Z 21082128        -0.0104       -0.0104                GLOB UNIF   CD-PIPE2
LOAD Z 21282147        -0.0104       -0.0104                GLOB UNIF   CD-PIPE2
LOAD Z 21472156        -0.0104       -0.0104                GLOB UNIF   CD-PIPE2
LOAD Z 21482193        -0.0104       -0.0104                GLOB UNIF   CD-PIPE2
LOAD Z 21562169        -0.0104       -0.0104                GLOB UNIF   CD-PIPE2
LOAD Z 21692004        -0.0104       -0.0104                GLOB UNIF   CD-PIPE2
LOAD Z 20042250        -0.0104       -0.0104                GLOB UNIF   CD-PIPE2
LOAD Z 21992221        -0.0104       -0.0104                GLOB UNIF   CD-PIPE2
LOAD Z 22502220        -0.0104       -0.0104                GLOB UNIF   CD-PIPE2
LOAD Z 23642219        -0.0104       -0.0104                GLOB UNIF   CD-PIPE2
LOAD Z 23632218        -0.0104       -0.0104                GLOB UNIF   CD-PIPE2
LOAD Z 23622217        -0.0104       -0.0104                GLOB UNIF   CD-PIPE2
LOAD Z 23612216        -0.0104       -0.0104                GLOB UNIF   CD-PIPE2
LOAD Z 22512215        -0.0104       -0.0104                GLOB UNIF   CD-PIPE2
LOADCN 130   1.100
LOAD Z 10501051        -0.0660       -0.0660                GLOB UNIF   SCD-P2
LOAD Z 10511052        -0.0660       -0.0660                GLOB UNIF   SCD-P2
LOAD Z 10441052        -0.0660       -0.0660                GLOB UNIF   SCD-P2
LOAD Z 10021044        -0.0660       -0.0660                GLOB UNIF   SCD-P2
LOAD Z 10021051        -0.0660       -0.0660                GLOB UNIF   SCD-P2
LOAD Z 10421049        -0.0660       -0.0660                GLOB UNIF   SCD-P2
LOAD Z 10421002        -0.0660       -0.0660                GLOB UNIF   SCD-P2
LOAD Z 10341002        -0.0660       -0.0660                GLOB UNIF   SCD-P2
LOAD Z 10331034        -0.0660       -0.0660                GLOB UNIF   SCD-P2
LOAD Z 10321033        -0.1592       -0.1592                GLOB UNIF   SCD-P2
LOAD Z 10321041        -0.0660       -0.0660                GLOB UNIF   SCD-P2
LOAD Z 10411042        -0.1592       -0.1592                GLOB UNIF   SCD-P2
LOAD Z 10331042        -0.0660       -0.0660                GLOB UNIF   SCD-P2
LOAD Z 10601066        -0.1592       -0.1592                GLOB UNIF   SCD-P1
LOAD Z 10661067        -0.0410       -0.0410                GLOB UNIF   SCD-P1
LOAD Z 10651066        -0.0410       -0.0410                GLOB UNIF   SCD-P1
LOAD Z 10621065        -0.0410       -0.0410                GLOB UNIF   SCD-P1
LOAD Z 10591062        -0.0410       -0.0410                GLOB UNIF   SCD-P1
LOAD Z 10561061        -0.1592       -0.1592                GLOB UNIF   SCD-P1
LOAD Z 10641067        -0.0660       -0.0660                GLOB UNIF   SCD-P1
LOAD Z 10611064        -0.0660       -0.0660                GLOB UNIF   SCD-P1
LOAD Z 10311039        -0.1592       -0.1592                GLOB UNIF   SCD-P1
LOAD Z 10391040        -0.1592       -0.1592                GLOB UNIF   SCD-P1
LOAD Z 10541055        -0.1718       -0.1718                GLOB UNIF   SCD-P1
LOAD Z 10011039        -0.1592       -0.1592                GLOB UNIF   SCD-P1
LOAD Z 10401046        -0.1592       -0.1592                GLOB UNIF   SCD-P1
LOAD Z 10551056        -0.1592       -0.1592                GLOB UNIF   SCD-P1
LOAD Z 10461055        -0.1592       -0.1592                GLOB UNIF   SCD-P1
LOAD Z 10461047        -0.1592       -0.1592                GLOB UNIF   SCD-P1
LOAD Z 10471048        -0.1592       -0.1592                GLOB UNIF   SCD-P1
LOAD Z 10411047        -0.1592       -0.1592                GLOB UNIF   SCD-P1
LOAD Z 10481049        -0.1592       -0.1592                GLOB UNIF   SCD-P1
LOAD Z 10481057        -0.1592       -0.1592                GLOB UNIF   SCD-P1
LOAD Z 10561057        -0.1592       -0.1592                GLOB UNIF   SCD-P1
LOAD Z 10571058        -0.1592       -0.1592                GLOB UNIF   SCD-P1
LOAD Z 10501058        -0.1592       -0.1592                GLOB UNIF   SCD-P1
LOAD Z 10241031        -0.1968       -0.1968                GLOB UNIF   SCD-P1
LOAD Z 10161024        -0.1968       -0.1968                GLOB UNIF   SCD-P1
LOAD Z 10311032        -0.1592       -0.1592                GLOB UNIF   SCD-P1
LOAD Z 10401041        -0.1592       -0.1592                GLOB UNIF   SCD-P1
LOAD Z 10591060        -0.1592       -0.1592                GLOB UNIF   SCD-P1
LOAD Z 10601061        -0.1592       -0.1592                GLOB UNIF   SCD-P1
LOAD Z 10541059        -0.1564       -0.1564                GLOB UNIF   SCD-P1
LOAD Z 10011054        -0.1564       -0.1564                GLOB UNIF   SCD-P1
LOAD Z 10301001        -0.1564       -0.1564                GLOB UNIF   SCD-P1
LOAD Z 10301031        -0.1564       -0.1564                GLOB UNIF   SCD-P1
LOAD Z 10261033        -0.1564       -0.1564                GLOB UNIF   SCD-P3
LOAD Z 10251032        -0.1564       -0.1564                GLOB UNIF   SCD-P3
LOADCN 131   1.100
LOAD Z 10501051        -0.0528       -0.0528                GLOB UNIF   SCD-P2
LOAD Z 10511052        -0.0528       -0.0528                GLOB UNIF   SCD-P2
```

```
LOAD Z 10441052        -0.0528       -0.0528                GLOB UNIF   SCD-P2
LOAD Z 10021044        -0.0528       -0.0528                GLOB UNIF   SCD-P2
LOAD Z 10021051        -0.0528       -0.0528                GLOB UNIF   SCD-P2
LOAD Z 10421049        -0.0528       -0.0528                GLOB UNIF   SCD-P2
LOAD Z 10421002        -0.0528       -0.0528                GLOB UNIF   SCD-P2
LOAD Z 10341002        -0.0528       -0.0528                GLOB UNIF   SCD-P2
LOAD Z 10331034        -0.0528       -0.0528                GLOB UNIF   SCD-P2
LOAD Z 10321033        -0.1274       -0.1274                GLOB UNIF   SCD-P2
LOAD Z 10321041        -0.0528       -0.0528                GLOB UNIF   SCD-P2
LOAD Z 10411042        -0.1274       -0.1274                GLOB UNIF   SCD-P2
LOAD Z 10331042        -0.0528       -0.0528                GLOB UNIF   SCD-P2
LOAD Z 10601066        -0.1274       -0.1274                GLOB UNIF   SCD-P1
LOAD Z 10661067        -0.0328       -0.0328                GLOB UNIF   SCD-P1
LOAD Z 10651066        -0.0328       -0.0328                GLOB UNIF   SCD-P1
LOAD Z 10621065        -0.0328       -0.0328                GLOB UNIF   SCD-P1
LOAD Z 10591062        -0.0328       -0.0328                GLOB UNIF   SCD-P1
LOAD Z 10561061        -0.1274       -0.1274                GLOB UNIF   SCD-P1
LOAD Z 10641067        -0.0528       -0.0528                GLOB UNIF   SCD-P1
LOAD Z 10611064        -0.0528       -0.0528                GLOB UNIF   SCD-P1
LOAD Z 10311039        -0.1274       -0.1274                GLOB UNIF   SCD-P1
LOAD Z 10391040        -0.1274       -0.1274                GLOB UNIF   SCD-P1
LOAD Z 10541055        -0.1374       -0.1374                GLOB UNIF   SCD-P1
LOAD Z 10011039        -0.1274       -0.1274                GLOB UNIF   SCD-P1
LOAD Z 10401046        -0.1274       -0.1274                GLOB UNIF   SCD-P1
LOAD Z 10551056        -0.1274       -0.1274                GLOB UNIF   SCD-P1
LOAD Z 10461055        -0.1274       -0.1274                GLOB UNIF   SCD-P1
LOAD Z 10461047        -0.1274       -0.1274                GLOB UNIF   SCD-P1
LOAD Z 10471048        -0.1274       -0.1274                GLOB UNIF   SCD-P1
LOAD Z 10411047        -0.1274       -0.1274                GLOB UNIF   SCD-P1
LOAD Z 10481049        -0.1274       -0.1274                GLOB UNIF   SCD-P1
LOAD Z 10481057        -0.1274       -0.1274                GLOB UNIF   SCD-P1
LOAD Z 10561057        -0.1274       -0.1274                GLOB UNIF   SCD-P1
LOAD Z 10571058        -0.1274       -0.1274                GLOB UNIF   SCD-P1
LOAD Z 10501058        -0.1274       -0.1274                GLOB UNIF   SCD-P1
LOAD Z 10241031        -0.1574       -0.1574                GLOB UNIF   SCD-P1
LOAD Z 10161024        -0.1574       -0.1574                GLOB UNIF   SCD-P1
LOAD Z 10311032        -0.1274       -0.1274                GLOB UNIF   SCD-P1
LOAD Z 10401041        -0.1274       -0.1274                GLOB UNIF   SCD-P1
LOAD Z 10591060        -0.1274       -0.1274                GLOB UNIF   SCD-P1
LOAD Z 10601061        -0.1274       -0.1274                GLOB UNIF   SCD-P1
LOAD Z 10541059        -0.1251       -0.1251                GLOB UNIF   SCD-P1
LOAD Z 10011054        -0.1251       -0.1251                GLOB UNIF   SCD-P1
LOAD Z 10301001        -0.1251       -0.1251                GLOB UNIF   SCD-P1
LOAD Z 10301031        -0.1251       -0.1251                GLOB UNIF   SCD-P1
LOAD Z 10261033        -0.1251       -0.1251                GLOB UNIF   SCD-P3
LOAD Z 10251032        -0.1251       -0.1251                GLOB UNIF   SCD-P3
*
**********************************LIVE LOADS************************************
LOADCN 260
LOADLB260 LIVE LOAD ON OPEN AREA MAIN DECK
*
***LDS1**    -26.083    13.000    65.000   -23.062    13.000    65.000   -26.083
***LDS2**     24.059    65.000   -23.062    24.059    65.000    -0.158    -0.158
***LDS3**      1.000  50   3   3   1   1260   -2EQUPPRESLLMD1
LOAD Z 41474170        -0.2382       -0.2382                GLOB UNIF   LLMD1
LOAD Z 41704191        -0.23822.80860-0.2382                GLOB UNIF   LLMD1
LOAD Z 41474148        -0.32533.02083-0.3253                GLOB UNIF   LLMD1
LOAD Z 41704171        -0.54683.02083-0.5468                GLOB UNIF   LLMD1
*
***LDS1**     -7.580    21.250    65.000     2.659    21.250    65.000    -7.580
***LDS2**     25.756    65.000     2.659    25.756    65.000    -0.158    -0.158
***LDS3**      1.000  50   3   3   1   1260   -2EQUPPRESLLMD2
LOAD Z 41784199        -0.30494.50560-0.3049                GLOB UNIF   LLMD2
LOAD Z 41794200        -0.29294.50560-0.2929                GLOB UNIF   LLMD2
LOAD Z 41774178 1.70560-0.3553       -0.3553                GLOB UNIF   LLMD2
LOAD Z 41784179        -0.3553       -0.3553                GLOB UNIF   LLMD2
LOAD Z 41794180        -0.3553       -0.3553                GLOB UNIF   LLMD2
LOAD Z 41804181        -0.3553       -0.3553                GLOB UNIF   LLMD2
*
***LDS1**     -2.939    13.000    65.000     5.572    13.000    65.000    -2.939
```

```
***LDS2**     21.250    65.000     5.572    21.250    65.000    -0.158    -0.158
***LDS3**      1.000  50   3   3   1   1260   -2EQUPPRESLLMD3
LOAD Z 41584179        -0.2318       -0.2318                GLOB UNIF   LLMD3
LOAD Z 41604181        -0.2929       -0.2929                GLOB UNIF   LLMD3
LOAD Z 41624182        -0.1464       -0.1464                GLOB UNIF   LLMD3
LOAD Z 41564157 1.06128-0.3253       -0.3253                GLOB UNIF   LLMD3
LOAD Z 41574158        -0.3253       -0.3253                GLOB UNIF   LLMD3
LOAD Z 41584159        -0.3253       -0.3253                GLOB UNIF   LLMD3
LOAD Z 41594160        -0.3253       -0.3253                GLOB UNIF   LLMD3
LOAD Z 41604161        -0.3253       -0.3253                GLOB UNIF   LLMD3
LOAD Z 41614162        -0.3253       -0.3253                GLOB UNIF   LLMD3
LOAD Z 41784179 2.63270-0.3253       -0.3253                GLOB UNIF   LLMD3
LOAD Z 41794180        -0.3253       -0.3253                GLOB UNIF   LLMD3
LOAD Z 41804181        -0.3253       -0.3253                GLOB UNIF   LLMD3
*
***LDS1**     -4.000     3.500    65.000     6.583     3.500    65.000    -4.000
***LDS2**      7.500    65.000     6.583     7.500    65.000    -0.158    -0.158
***LDS3**      1.000  50   3   3   1   1260   -2EQUPPRESLLMD4
LOAD Z 41314132        -0.1577       -0.1577                GLOB UNIF   LLMD4
LOAD Z 41314139        -0.4173       -0.4173                GLOB UNIF   LLMD4
LOAD Z 41324141        -0.4173       -0.4173                GLOB UNIF   LLMD4
LOAD Z 41394140        -0.1577       -0.1577                GLOB UNIF   LLMD4
LOAD Z 41404141        -0.1577       -0.1577                GLOB UNIF   LLMD4
*
***LDS1**    -21.060    -3.453    65.000   -13.000    -3.453    65.000   -21.060
***LDS2**      2.833    65.000   -13.000     2.833    65.000    -0.158    -0.158
***LDS3**      1.000  50   3   3   1   1260   -2EQUPPRESLLMD5
LOAD Z 40994119 4.04660-0.2366       -0.2366                GLOB UNIF   LLMD5
LOAD Z 41184136        -0.28073.83333-0.2807                GLOB UNIF   LLMD5
LOAD Z 41194137        -0.23663.83333-0.2366                GLOB UNIF   LLMD5
LOAD Z 41084113 0.04660-0.1183       -0.1183                GLOB UNIF   LLMD5
LOAD Z 41134120        -0.1183       -0.1183                GLOB UNIF   LLMD5
LOAD Z 41204126        -0.1183       -0.1183                GLOB UNIF   LLMD5
LOAD Z 41184119        -0.4958       -0.4958                GLOB UNIF   LLMD5
LOAD Z 41194120        -0.4958       -0.4958                GLOB UNIF   LLMD5
*
***LDS1**    -13.000    -3.500    65.000    -4.000    -3.500    65.000   -13.000
***LDS2**      2.833    65.000    -4.000     2.833    65.000    -0.158    -0.158
***LDS3**      1.000  50   3   3   1   1260   -2EQUPPRESLLMD5
LOAD Z 41094129        -0.23666.33300-0.2366                GLOB UNIF   LLMD5
LOAD Z 41104130        -0.23666.33300-0.2366                GLOB UNIF   LLMD5
LOAD Z 41084109        -0.4994       -0.4994                GLOB UNIF   LLMD5
LOAD Z 41094110        -0.4994       -0.4994                GLOB UNIF   LLMD5
LOAD Z 41104111        -0.4994       -0.4994                GLOB UNIF   LLMD5
LOAD Z 41114131        -0.11836.33300-0.1183                GLOB UNIF   LLMD5
LOAD Z 41084113        -0.1183       -0.1183                GLOB UNIF   LLMD5
LOAD Z 41134120        -0.1183       -0.1183                GLOB UNIF   LLMD5
LOAD Z 41204126        -0.1183       -0.1183                GLOB UNIF   LLMD5
*
***LDS1**    -22.921    -7.500    65.000   -13.000    -7.500    65.000   -22.921
***LDS2**     -3.500    65.000   -13.000    -3.500    65.000    -0.158    -0.158
***LDS3**      1.000  50   3   3   1   1260   -2EQUPPRESLLMD6
LOAD Z 40994119        -0.23664.00000-0.2366                GLOB UNIF   LLMD6
LOAD Z 41004108        -0.1183       -0.1183                GLOB UNIF   LLMD6
LOAD Z 40974098        -0.3154       -0.3154                GLOB UNIF   LLMD6
LOAD Z 40984099        -0.3154       -0.3154                GLOB UNIF   LLMD6
LOAD Z 40994100        -0.3154       -0.3154                GLOB UNIF   LLMD6
LOAD Z 42124097 2.82857-0.3154       -0.3154                GLOB UNIF   LLMD6
*
***LDS1**    -13.000    -7.524    65.000    -4.000    -7.524    65.000   -13.000
***LDS2**     -3.500    65.000    -4.000    -3.500    65.000    -0.158    -0.158
***LDS3**      1.000  50   3   3   1   1260   -2EQUPPRESLLMD6
LOAD Z 40794109 5.47560-0.2366       -0.2366                GLOB UNIF   LLMD6
LOAD Z 40804110 5.47560-0.2366       -0.2366                GLOB UNIF   LLMD6
LOAD Z 40014100 5.47560-0.1183       -0.1183                GLOB UNIF   LLMD6
LOAD Z 40824101 5.47560-0.1183       -0.1183                GLOB UNIF   LLMD6
LOAD Z 41014111        -0.1183       -0.1183                GLOB UNIF   LLMD6
LOAD Z 41084109        -0.3173       -0.3173                GLOB UNIF   LLMD6
LOAD Z 41094110        -0.3173       -0.3173                GLOB UNIF   LLMD6
LOAD Z 41104111        -0.3173       -0.3173                GLOB UNIF   LLMD6
```

```
LOAD Z 41004108        -0.1183       -0.1183                GLOB UNIF   LLMD6
*
***LDS1**     -4.000    -7.500    65.000     6.583    -7.500    65.000    -4.000
***LDS2**     -3.500    65.000     6.583    -3.500    65.000    -0.158    -0.158
***LDS3**      1.000  50   3   3   1   1260   -2EQUPPRESLLMD6
LOAD Z 40054103        -0.1577       -0.1577                GLOB UNIF   LLMD6
LOAD Z 41014102        -0.1577       -0.1577                GLOB UNIF   LLMD6
LOAD Z 41014111        -0.4173       -0.4173                GLOB UNIF   LLMD6
LOAD Z 41024005        -0.1577       -0.1577                GLOB UNIF   LLMD6
LOAD Z 41034112        -0.4173       -0.4173                GLOB UNIF   LLMD6
LOAD Z 41114112        -0.1577       -0.1577                GLOB UNIF   LLMD6
*
***LDS1**    -22.921   -13.000    65.000   -13.000   -13.000    65.000   -22.921
***LDS2**     -7.500    65.000   -13.000    -7.500    65.000    -0.158    -0.158
***LDS3**      1.000  50   3   3   1   1260   -2EQUPPRESLLMD7
LOAD Z 40754098        -0.2366       -0.2366                GLOB UNIF   LLMD7
LOAD Z 40764099        -0.2366       -0.2366                GLOB UNIF   LLMD7
LOAD Z 40014100        -0.1183       -0.1183                GLOB UNIF   LLMD7
LOAD Z 40734074 3.16190-0.2169       -0.2169                GLOB UNIF   LLMD7
LOAD Z 40744075        -0.2169       -0.2169                GLOB UNIF   LLMD7
LOAD Z 40754076        -0.2169       -0.2169                GLOB UNIF   LLMD7
LOAD Z 40744097        -0.1909       -0.1909                GLOB UNIF   LLMD7
LOAD Z 40974098        -0.2169       -0.2169                GLOB UNIF   LLMD7
LOAD Z 40984099        -0.2169       -0.2169                GLOB UNIF   LLMD7
LOAD Z 40994100        -0.2169       -0.2169                GLOB UNIF   LLMD7
LOAD Z 42124097 2.82857-0.2169       -0.2169                GLOB UNIF   LLMD7
LOAD Z 40764001        -0.2169       -0.2169                GLOB UNIF   LLMD7
*
***LDS1**    -13.000   -13.000    65.000    -4.000   -13.000    65.000   -13.000
***LDS2**     -7.500    65.000    -4.000    -7.500    65.000    -0.158    -0.158
***LDS3**      1.000  50   3   3   1   1260   -2EQUPPRESLLMD7
LOAD Z 40794109        -0.23665.50000-0.2366                GLOB UNIF   LLMD7
LOAD Z 40804110        -0.23665.50000-0.2366                GLOB UNIF   LLMD7
LOAD Z 40014078        -0.4337       -0.4337                GLOB UNIF   LLMD7
LOAD Z 40014100        -0.1183       -0.1183                GLOB UNIF   LLMD7
LOAD Z 40824101        -0.1183       -0.1183                GLOB UNIF   LLMD7
LOAD Z 40784079        -0.4337       -0.4337                GLOB UNIF   LLMD7
LOAD Z 40794080        -0.4337       -0.4337                GLOB UNIF   LLMD7
LOAD Z 40804081        -0.4337       -0.4337                GLOB UNIF   LLMD7
LOAD Z 40814082        -0.4337       -0.4337                GLOB UNIF   LLMD7
*
***LDS1**              -13.000    65.000    13.979   -13.000    65.000
***LDS2**     -7.500    65.000    13.979    -7.500    65.000    -0.158    -0.158
***LDS3**      1.000  50   3   3   1   1260   -2EQUPPRESLLMD7
LOAD Z 40064005        -0.2595       -0.2595                GLOB UNIF   LLMD7
LOAD Z 41044105        -0.21690.97870-0.2169                GLOB UNIF   LLMD7
LOAD Z 40024092        -0.21690.97870-0.2169                GLOB UNIF   LLMD7
LOAD Z 40024104        -0.3302       -0.3302                GLOB UNIF   LLMD7
LOAD Z 40054103        -0.2169       -0.2169                GLOB UNIF   LLMD7
LOAD Z 40854102        -0.1288       -0.1288                GLOB UNIF   LLMD7
LOAD Z 40894103        -0.3838       -0.3838                GLOB UNIF   LLMD7
LOAD Z 41024005        -0.2169       -0.2169                GLOB UNIF   LLMD7
LOAD Z 41034104        -0.2169       -0.2169                GLOB UNIF   LLMD7
LOAD Z 40064088        -0.2169       -0.2169                GLOB UNIF   LLMD7
LOAD Z 40854086        -0.2169       -0.2169                GLOB UNIF   LLMD7
LOAD Z 40864087        -0.2169       -0.2169                GLOB UNIF   LLMD7
LOAD Z 40874006        -0.2169       -0.2169                GLOB UNIF   LLMD7
LOAD Z 40884089        -0.2169       -0.2169                GLOB UNIF   LLMD7
LOAD Z 40894090        -0.2169       -0.2169                GLOB UNIF   LLMD7
LOAD Z 40904002        -0.2169       -0.2169                GLOB UNIF   LLMD7
*
***LDS1**    -22.921   -19.257    65.000   -22.000   -19.257    65.000   -22.921
***LDS2**    -13.000    65.000   -22.000   -13.000    65.000    -0.158    -0.158
***LDS3**      1.000  50   3   3   1   1260   -2EQUPPRESLLMD7
LOAD Z 40734074 3.16190-0.4934       -0.4934                GLOB UNIF   LLMD7
LOAD Z 40004074        -0.0726       -0.0726                GLOB UNIF   LLMD7
LOAD Z 40474000 1.99330-0.0726       -0.0726                GLOB UNIF   LLMD7
*
***LDS1**    -22.000   -19.257    65.000    -5.571   -19.257    65.000   -22.000
***LDS2**    -13.000    65.000    -5.571   -13.000    65.000    -0.158    -0.158
```

```
***LDS3**      1.000  50   3   3   1   1260   -2EQUPPRESLLMD7
LOAD Z 40484062 1.99330-0.2366       -0.2366                GLOB UNIF   LLMD7
LOAD Z 40494063 1.99330-0.2366       -0.2366                GLOB UNIF   LLMD7
LOAD Z 40514065 1.99330-0.2929       -0.2929                GLOB UNIF   LLMD7
LOAD Z 40524066 1.99330-0.1464       -0.1464                GLOB UNIF   LLMD7
LOAD Z 40624075        -0.2366       -0.2366                GLOB UNIF   LLMD7
LOAD Z 40634076        -0.2366       -0.2366                GLOB UNIF   LLMD7
LOAD Z 40654079        -0.2929       -0.2929                GLOB UNIF   LLMD7
LOAD Z 40664081        -0.1464       -0.1464                GLOB UNIF   LLMD7
LOAD Z 40014078        -0.1626       -0.1626                GLOB UNIF   LLMD7
LOAD Z 40744075        -0.1626       -0.1626                GLOB UNIF   LLMD7
LOAD Z 40754076        -0.1626       -0.1626                GLOB UNIF   LLMD7
LOAD Z 40784079        -0.1626       -0.1626                GLOB UNIF   LLMD7
LOAD Z 40794080        -0.1626       -0.1626                GLOB UNIF   LLMD7
LOAD Z 40804081        -0.1626       -0.1626                GLOB UNIF   LLMD7
LOAD Z 40004062        -0.3307       -0.3307                GLOB UNIF   LLMD7
LOAD Z 40004074        -0.1183       -0.1183                GLOB UNIF   LLMD7
LOAD Z 40474000 1.99330-0.1183       -0.1183                GLOB UNIF   LLMD7
LOAD Z 40624063        -0.3307       -0.3307                GLOB UNIF   LLMD7
LOAD Z 40634064        -0.3307       -0.3307                GLOB UNIF   LLMD7
LOAD Z 40644065        -0.3307       -0.3307                GLOB UNIF   LLMD7
LOAD Z 40654066        -0.3307       -0.3307                GLOB UNIF   LLMD7
LOAD Z 40764001        -0.1626       -0.1626                GLOB UNIF   LLMD7
LOAD Z 40504064 1.99330-0.2647       -0.2647                GLOB UNIF   LLMD7
LOAD Z 40644001        -0.2647       -0.2647                GLOB UNIF   LLMD7
*
***LDS1**     -9.286   -25.716    65.000    -5.571   -25.716    65.000    -9.286
***LDS2**    -19.257    65.000    -5.571   -19.257    65.000    -0.158    -0.158
***LDS3**      1.000  50   3   3   1   1260   -2EQUPPRESLLMD7
LOAD Z 40214040 3.78430-0.1464       -0.1464                GLOB UNIF   LLMD7
LOAD Z 40224052 3.78430-0.1464       -0.1464                GLOB UNIF   LLMD7
LOAD Z 40404051        -0.1464       -0.1464                GLOB UNIF   LLMD7
LOAD Z 40514065        -0.14641.99330-0.1464                GLOB UNIF   LLMD7
LOAD Z 40524066        -0.14641.99330-0.1464                GLOB UNIF   LLMD7
LOAD Z 40514052        -0.5094       -0.5094                GLOB UNIF   LLMD7
*
***LDS1**     -5.571   -25.716    65.000    -1.857   -25.716    65.000    -5.571
***LDS2**    -13.000    65.000    -1.857   -13.000    65.000    -0.158    -0.158
***LDS3**      1.000  50   3   3   1   1260   -2EQUPPRESLLMD7
LOAD Z 40224052 3.78430-0.1464       -0.1464                GLOB UNIF   LLMD7
LOAD Z 40234053 3.78430-0.1464       -0.1464                GLOB UNIF   LLMD7
LOAD Z 40524066        -0.1464       -0.1464                GLOB UNIF   LLMD7
LOAD Z 40664081        -0.1464       -0.1464                GLOB UNIF   LLMD7
LOAD Z 40814082        -0.1626       -0.1626                GLOB UNIF   LLMD7
LOAD Z 40824083        -0.1626       -0.1626                GLOB UNIF   LLMD7
LOAD Z 40834084        -0.1626       -0.1626                GLOB UNIF   LLMD7
LOAD Z 40524053        -0.5148       -0.5148                GLOB UNIF   LLMD7
LOAD Z 40534067        -0.1464       -0.1464                GLOB UNIF   LLMD7
LOAD Z 40664067        -0.3253       -0.3253                GLOB UNIF   LLMD7
LOAD Z 40674084        -0.1464       -0.1464                GLOB UNIF   LLMD7
*
***LDS1**     -1.857   -25.716    65.000     1.857   -25.716    65.000    -1.857
***LDS2**    -13.000    65.000     1.857   -13.000    65.000    -0.158    -0.158
***LDS3**      1.000  50   3   3   1   1260   -2EQUPPRESLLMD7
LOAD Z 40234053 3.78430-0.1464       -0.1464                GLOB UNIF   LLMD7
LOAD Z 40244031 3.78430-0.1464       -0.1464                GLOB UNIF   LLMD7
LOAD Z 40314042        -0.1464       -0.1464                GLOB UNIF   LLMD7
LOAD Z 40424054        -0.1464       -0.1464                GLOB UNIF   LLMD7
LOAD Z 40544068        -0.1464       -0.1464                GLOB UNIF   LLMD7
LOAD Z 40684086        -0.1464       -0.1464                GLOB UNIF   LLMD7
LOAD Z 40844085        -0.3253       -0.3253                GLOB UNIF   LLMD7
LOAD Z 40854086        -0.3253       -0.3253                GLOB UNIF   LLMD7
LOAD Z 40534054        -0.6775       -0.6775                GLOB UNIF   LLMD7
LOAD Z 40534067        -0.1464       -0.1464                GLOB UNIF   LLMD7
LOAD Z 40674084        -0.1464       -0.1464                GLOB UNIF   LLMD7
*
***LDS1**      1.857   -25.716    65.000     9.286   -25.716    65.000     1.857
***LDS2**    -13.000    65.000     9.286   -13.000    65.000    -0.158    -0.158
***LDS3**      1.000  50   3   3   1   1260   -2EQUPPRESLLMD7
LOAD Z 40244031 3.78430-0.1464       -0.1464                GLOB UNIF   LLMD7
```

```
LOAD Z 40254032 3.78430-0.2929       -0.2929                GLOB UNIF   LLMD7
LOAD Z 40264033 3.78430-0.1464       -0.1464                GLOB UNIF   LLMD7
LOAD Z 40314032        -0.1353       -0.1353                GLOB UNIF   LLMD7
LOAD Z 40314042        -0.1464       -0.1464                GLOB UNIF   LLMD7
LOAD Z 40324033        -0.1353       -0.1353                GLOB UNIF   LLMD7
LOAD Z 40324043        -0.2929       -0.2929                GLOB UNIF   LLMD7
LOAD Z 40334044        -0.1464       -0.1464                GLOB UNIF   LLMD7
LOAD Z 40424043        -0.1544       -0.1544                GLOB UNIF   LLMD7
LOAD Z 40424054        -0.1464       -0.1464                GLOB UNIF   LLMD7
LOAD Z 40434044        -0.1544       -0.1544                GLOB UNIF   LLMD7
LOAD Z 40434055        -0.2929       -0.2929                GLOB UNIF   LLMD7
LOAD Z 40444056        -0.1464       -0.1464                GLOB UNIF   LLMD7
LOAD Z 40544068        -0.1464       -0.1464                GLOB UNIF   LLMD7
LOAD Z 40554069        -0.2929       -0.2929                GLOB UNIF   LLMD7
LOAD Z 40564070        -0.1464       -0.1464                GLOB UNIF   LLMD7
LOAD Z 40684069        -0.3253       -0.3253                GLOB UNIF   LLMD7
LOAD Z 40684086        -0.1464       -0.1464                GLOB UNIF   LLMD7
LOAD Z 40694070        -0.3253       -0.3253                GLOB UNIF   LLMD7
LOAD Z 40694088        -0.2929       -0.2929                GLOB UNIF   LLMD7
LOAD Z 40704090        -0.1464       -0.1464                GLOB UNIF   LLMD7
LOAD Z 40064088        -0.1626       -0.1626                GLOB UNIF   LLMD7
LOAD Z 40864087        -0.1626       -0.1626                GLOB UNIF   LLMD7
LOAD Z 40874006        -0.1626       -0.1626                GLOB UNIF   LLMD7
LOAD Z 40884089        -0.1626       -0.1626                GLOB UNIF   LLMD7
LOAD Z 40894090        -0.1626       -0.1626                GLOB UNIF   LLMD7
LOAD Z 40544055        -0.2251       -0.2251                GLOB UNIF   LLMD7
LOAD Z 40554056        -0.2251       -0.2251                GLOB UNIF   LLMD7
*
***LDS1**      9.286   -25.716    65.000    13.979   -25.716    65.000     9.286
***LDS2**    -13.000    65.000    13.979   -13.000    65.000    -0.158    -0.158
***LDS3**      1.000  50   3   3   1   1260   -2EQUPPRESLLMD7
LOAD Z 40264033 3.78430-0.1464       -0.1464                GLOB UNIF   LLMD7
LOAD Z 40334034        -0.1977       -0.1977                GLOB UNIF   LLMD7
LOAD Z 40334044        -0.1464       -0.1464                GLOB UNIF   LLMD7
LOAD Z 40344035        -0.19770.97870-0.1977                GLOB UNIF   LLMD7
LOAD Z 40444056        -0.1464       -0.1464                GLOB UNIF   LLMD7
LOAD Z 40564070        -0.1464       -0.1464                GLOB UNIF   LLMD7
LOAD Z 40704071        -0.3253       -0.3253                GLOB UNIF   LLMD7
LOAD Z 40704090        -0.1464       -0.1464                GLOB UNIF   LLMD7
LOAD Z 40714072        -0.32530.97870-0.3253                GLOB UNIF   LLMD7
LOAD Z 40024092        -0.16260.97870-0.1626                GLOB UNIF   LLMD7
LOAD Z 40274034 3.78430-0.2236       -0.2236                GLOB UNIF   LLMD7
LOAD Z 40574061        -0.2236       -0.2236                GLOB UNIF   LLMD7
LOAD Z 40614071        -0.2236       -0.2236                GLOB UNIF   LLMD7
LOAD Z 40564057        -0.3171       -0.3171                GLOB UNIF   LLMD7
LOAD Z 40574058        -0.31710.97870-0.3171                GLOB UNIF   LLMD7
LOAD Z 40714002        -0.2236       -0.2236                GLOB UNIF   LLMD7
LOAD Z 40904002        -0.1626       -0.1626                GLOB UNIF   LLMD7
LOAD Z 41814333        -0.2097       -0.2097                GLOB UNIF   LLMD2
LOAD Z 43334202        -0.20971.00560-0.2097                GLOB UNIF   LLMD2
LOAD Z 41814336        -0.35530.80213-0.3553                GLOB UNIF   LLMD2
LOAD Z 41814336        -0.3253       -0.3253                GLOB UNIF   LLMD3
LOAD Z 43364182        -0.3253       -0.3253                GLOB UNIF   LLMD3
LOAD Z 40974344        -0.1909       -0.1909                GLOB UNIF   LLMD6
LOAD Z 43444117        -0.19090.70313-0.1909                GLOB UNIF   LLMD6
LOAD Z 40984345        -0.2366       -0.2366                GLOB UNIF   LLMD6
LOAD Z 43454118 0.74973-0.2807       -0.2807                GLOB UNIF   LLMD5
LOAD Z 43454118        -0.23660.70313-0.2366                GLOB UNIF   LLMD6
LOAD Z 43524118 0.17958-0.4958       -0.4958                GLOB UNIF   LLMD5
LOAD Z 40344356        -0.2236       -0.2236                GLOB UNIF   LLMD7
LOAD Z 43564057        -0.2236       -0.2236                GLOB UNIF   LLMD7
*
LOADCN 261
LOADLB261 LIVE LOAD ON LAYDOWN AREA MAIN DECK
*
***LDS1**    -22.921   -21.250    65.000   -22.000   -21.250    65.000   -22.921
***LDS2**    -19.236    65.000   -22.000   -19.236    65.000    -0.300    -0.300
***LDS3**      1.000  50   3   3   1   1261   -2EQUPPRESLLMDLAY
LOAD Z 40464047 3.16190-0.3021       -0.3021                GLOB UNIF   LLMDLAY
LOAD Z 40474000        -0.13820.92143-0.1382                GLOB UNIF   LLMDLAY
```

```
*
***LDS1**    -22.000   -21.250    65.000    -8.170   -21.250    65.000   -22.000
***LDS2**    -19.236    65.000    -8.170   -19.236    65.000    -0.300    -0.300
***LDS3**      1.000  50   3   3   1   1261   -2EQUPPRESLLMDLAY
LOAD Z 40484062        -0.45002.01420-0.4500                GLOB UNIF   LLMDLAY
LOAD Z 40494063        -0.45002.01420-0.4500                GLOB UNIF   LLMDLAY
LOAD Z 40514065        -0.44602.01420-0.4460                GLOB UNIF   LLMDLAY
LOAD Z 40474000        -0.22502.01420-0.2250                GLOB UNIF   LLMDLAY
LOAD Z 40474048        -0.3021       -0.3021                GLOB UNIF   LLMDLAY
LOAD Z 40484049        -0.3021       -0.3021                GLOB UNIF   LLMDLAY
LOAD Z 40494050        -0.3021       -0.3021                GLOB UNIF   LLMDLAY
LOAD Z 40504051        -0.3021       -0.3021                GLOB UNIF   LLMDLAY
LOAD Z 40514052        -0.30211.11613-0.3021                GLOB UNIF   LLMDLAY
LOAD Z 40504064        -0.50362.01420-0.5036                GLOB UNIF   LLMDLAY
*
***LDS1**    -22.921   -25.716    65.000   -22.000   -25.716    65.000   -22.921
***LDS2**    -21.250    65.000   -22.000   -21.250    65.000    -0.300    -0.300
***LDS3**      1.000  50   3   3   1   1261   -2EQUPPRESLLMDLAY
LOAD Z 40174047 3.78430-0.1382       -0.1382                GLOB UNIF   LLMDLAY
LOAD Z 40464047 3.16190-0.6699       -0.6699                GLOB UNIF   LLMDLAY
*
***LDS1**    -22.000   -25.716    65.000   -19.000   -25.716    65.000   -22.000
***LDS2**    -21.250    65.000   -19.000   -21.250    65.000    -0.300    -0.300
***LDS3**      1.000  50   3   3   1   1261   -2EQUPPRESLLMDLAY
LOAD Z 40184037 3.78430-0.2250       -0.2250                GLOB UNIF   LLMDLAY
LOAD Z 40374048        -0.2250       -0.2250                GLOB UNIF   LLMDLAY
LOAD Z 40174047 3.78430-0.2250       -0.2250                GLOB UNIF   LLMDLAY
LOAD Z 40474048        -0.6699       -0.6699                GLOB UNIF   LLMDLAY
*
***LDS1**    -19.000   -25.716    65.000    -9.286   -25.716    65.000   -19.000
***LDS2**    -21.250    65.000    -9.286   -21.250    65.000    -0.300    -0.300
***LDS3**      1.000  50   3   3   1   1261   -2EQUPPRESLLMDLAY
LOAD Z 40184037 3.78430-0.2250       -0.2250                GLOB UNIF   LLMDLAY
LOAD Z 40194038 3.78430-0.4500       -0.4500                GLOB UNIF   LLMDLAY
LOAD Z 40214040 3.78430-0.2786       -0.2786                GLOB UNIF   LLMDLAY
LOAD Z 40374038        -0.4074       -0.4074                GLOB UNIF   LLMDLAY
LOAD Z 40374048        -0.2250       -0.2250                GLOB UNIF   LLMDLAY
LOAD Z 40384039        -0.4074       -0.4074                GLOB UNIF   LLMDLAY
LOAD Z 40384049        -0.4500       -0.4500                GLOB UNIF   LLMDLAY
LOAD Z 40394040        -0.4074       -0.4074                GLOB UNIF   LLMDLAY
LOAD Z 40404051        -0.2786       -0.2786                GLOB UNIF   LLMDLAY
LOAD Z 40204039 3.78430-0.5036       -0.5036                GLOB UNIF   LLMDLAY
LOAD Z 40394041        -0.5036       -0.5036                GLOB UNIF   LLMDLAY
LOAD Z 40414050        -0.5036       -0.5036                GLOB UNIF   LLMDLAY
LOAD Z 40484049        -0.2625       -0.2625                GLOB UNIF   LLMDLAY
LOAD Z 40494050        -0.2625       -0.2625                GLOB UNIF   LLMDLAY
LOAD Z 40504051        -0.2625       -0.2625                GLOB UNIF   LLMDLAY
*
***LDS1**     -9.286   -25.716    65.000    -8.170   -25.716    65.000    -9.286
***LDS2**    -21.250    65.000    -8.170   -21.250    65.000    -0.300    -0.300
***LDS3**      1.000  50   3   3   1   1261   -2EQUPPRESLLMDLAY
LOAD Z 40214040 3.78430-0.1674       -0.1674                GLOB UNIF   LLMDLAY
LOAD Z 40404051        -0.1674       -0.1674                GLOB UNIF   LLMDLAY
LOAD Z 40514052        -0.66991.11613-0.6699                GLOB UNIF   LLMDLAY
*
LOADCN 262
LOADLB262 LIVE LOAD ON ESCAPE ROUTE ON MAIN DECK
*
***LDS1**    -25.800    25.800    65.000    17.300    25.800    65.000   -25.800
***LDS2**     29.100    65.000    17.300    29.100    65.000    -0.100    -0.100
***LDS3**      1.000   0   1   3   1   1262   -2EQUPPRESLLMD1
LOAD Z 41734194 4.55000-0.3000       -0.3000                GLOB UNIF   LLMD1
LOAD Z 41744195 4.55000-0.3000       -0.3000                GLOB UNIF   LLMD1
LOAD Z 41774198 4.55000-0.3715       -0.3715                GLOB UNIF   LLMD1
LOAD Z 41784199 4.55000-0.3715       -0.3715                GLOB UNIF   LLMD1
LOAD Z 41794200 4.55000-0.3715       -0.3715                GLOB UNIF   LLMD1
LOAD Z 41864207 4.55000-0.2925       -0.2925                GLOB UNIF   LLMD1
LOAD Z 43334202 1.05000-0.3715       -0.3715                GLOB UNIF   LLMD1
LOAD Z 43344203 1.05000-0.3715       -0.3715                GLOB UNIF   LLMD1
LOAD Z 43354204 1.05000-0.3715       -0.3715                GLOB UNIF   LLMD1
```

```
LOAD Z 41754196 4.55000-0.3357       -0.3357                GLOB UNIF   LLMD1
LOAD Z 41844205 4.55000-0.3232       -0.3232                GLOB UNIF   LLMD1
LOAD Z 41714192 4.55000-0.5300       -0.5300                GLOB UNIF   LLMD1
*
***LDS1**    -29.500    -7.500    65.000   -26.083    -7.500    65.000   -29.500
***LDS2**     29.100    65.000   -26.083    29.100    65.000    -0.100    -0.100
***LDS3**      1.000  50   1   3   1   1262   -2EQUPPRESLLMD2
LOAD Z 40964343        -0.0854       -0.0854                GLOB UNIF   LLMD2
LOAD Z 41164134        -0.0854       -0.0854                GLOB UNIF   LLMD2
LOAD Z 41344340        -0.0854       -0.0854                GLOB UNIF   LLMD2
LOAD Z 41474170        -0.0854       -0.0854                GLOB UNIF   LLMD2
LOAD Z 41704191        -0.08543.41667-0.0854                GLOB UNIF   LLMD2
LOAD Z 43404147        -0.0854       -0.0854                GLOB UNIF   LLMD2
LOAD Z 43434116        -0.0854       -0.0854                GLOB UNIF   LLMD2
LOAD Z 40954115        -0.0854       -0.0854                GLOB UNIF   LLMD2
LOAD Z 41154133        -0.0854       -0.0854                GLOB UNIF   LLMD2
LOAD Z 41334146        -0.0854       -0.0854                GLOB UNIF   LLMD2
LOAD Z 41464169        -0.0854       -0.0854                GLOB UNIF   LLMD2
LOAD Z 41694190        -0.08543.41667-0.0854                GLOB UNIF   LLMD2
LOAD Z 41464147        -0.3813       -0.3813                GLOB UNIF   LLMD2
LOAD Z 40964095        -0.1625       -0.1625                GLOB UNIF   LLMD2
LOAD Z 41164115        -0.3375       -0.3375                GLOB UNIF   LLMD2
LOAD Z 41334134        -0.3500       -0.3500                GLOB UNIF   LLMD2
LOAD Z 41694170        -0.5988       -0.5988                GLOB UNIF   LLMD2
*
***LDS1**     14.000    25.800    65.000    14.000   -29.100    65.000    17.300
***LDS2**     25.800    65.000    17.300   -29.100    65.000    -0.100    -0.100
***LDS3**      1.000  50   1   3   0   1262   -2EQUPPRESLLMD3
LOAD Z 40284035 0.40000-0.3300       -0.3300                GLOB UNIF   LLMD3
LOAD Z 40354058        -0.3300       -0.3300                GLOB UNIF   LLMD3
LOAD Z 40584072        -0.3300       -0.3300                GLOB UNIF   LLMD3
LOAD Z 40724092        -0.3300       -0.3300                GLOB UNIF   LLMD3
LOAD Z 40924105        -0.3300       -0.3300                GLOB UNIF   LLMD3
LOAD Z 41054123        -0.3300       -0.3300                GLOB UNIF   LLMD3
LOAD Z 41234143        -0.3300       -0.3300                GLOB UNIF   LLMD3
LOAD Z 41434166        -0.3300       -0.3300                GLOB UNIF   LLMD3
LOAD Z 41664186        -0.3300       -0.3300                GLOB UNIF   LLMD3
LOAD Z 41864207        -0.33008.50000-0.3300                GLOB UNIF   LLMD3
*
***LDS1**    -26.083   -21.250    65.000   -22.000   -21.250    65.000   -26.083
***LDS2**     -4.203    65.000   -22.000    -4.203    65.000    -0.100    -0.100
***LDS3**      1.000 100   1   3   0   1262   -2EQUPPRESLLMD4
LOAD Z 43434349        -0.1648       -0.1648                GLOB UNIF   LLMD4
LOAD Z 43494344        -0.1648       -0.1648                GLOB UNIF   LLMD4
LOAD Z 40734074        -0.6875       -0.6875                GLOB UNIF   LLMD4
LOAD Z 40464047        -0.4125       -0.4125                GLOB UNIF   LLMD4
LOAD Z 40964212        -0.4399       -0.4399                GLOB UNIF   LLMD4
LOAD Z 42124097        -0.4399       -0.4399                GLOB UNIF   LLMD4
*
***LDS1**    -26.000   -25.800    65.000   -26.000   -29.100    65.000    14.000
***LDS2**    -25.800    65.000    14.000   -29.100    65.000    -0.100    -0.100
***LDS3**      1.000  10   1   3   0   1262   -2EQUPPRESLLMD5
LOAD Z 40184037 0.40000-0.30003.30000-0.3000                GLOB UNIF   LLMD5
LOAD Z 40194038 0.40000-0.30003.30000-0.3000                GLOB UNIF   LLMD5
LOAD Z 40214040 0.40000-0.37153.30000-0.3715                GLOB UNIF   LLMD5
LOAD Z 40224052 0.40000-0.37153.30000-0.3715                GLOB UNIF   LLMD5
LOAD Z 40234053 0.40000-0.37153.30000-0.3715                GLOB UNIF   LLMD5
LOAD Z 40244031 0.40000-0.37153.30000-0.3715                GLOB UNIF   LLMD5
LOAD Z 40254032 0.40000-0.37153.30000-0.3715                GLOB UNIF   LLMD5
LOAD Z 40264033 0.40000-0.37153.30000-0.3715                GLOB UNIF   LLMD5
LOAD Z 40204039 0.40000-0.33573.30000-0.3357                GLOB UNIF   LLMD5
LOAD Z 40274034 0.40000-0.28573.30000-0.2857                GLOB UNIF   LLMD5
LOAD Z 40174047 0.40000-0.55003.30000-0.5500                GLOB UNIF   LLMD5
*
***LDS1**    -29.500   -21.250    65.000   -29.500   -25.100    65.000   -22.000
***LDS2**    -21.250    65.000   -22.000   -25.100    65.000    -0.100    -0.100
***LDS3**      1.000  10   1   3   0   1262   -2EQUPPRESLLMD6
LOAD Z 40164046 4.40000-0.3750       -0.3750                GLOB UNIF   LLMD6
LOAD Z 40154045 4.40000-0.1708       -0.1708                GLOB UNIF   LLMD6
LOAD Z 40174047 4.40000-0.2042       -0.2042                GLOB UNIF   LLMD6
```

```
LOADCN 265                 1.100
LOADLB265 LIVE LOAD ON OPEN AREA MEZZANINE DECK
*
***LDS1**    -22.000     1.962    53.000   -16.916     1.962    53.000   -22.000
***LDS2**     13.000    53.000   -16.916    13.000    53.000    -0.050    -0.050
***LDS3**      1.000  50   3   3   1   1265   -2EQUPPRESLLMZUTL
LOAD Z 31233124        -0.0688       -0.0688                GLOB UNIF   LLMZUTL
LOAD Z 31243125        -0.06882.08450-0.0688                GLOB UNIF   LLMZUTL
LOAD Z 31063107        -0.2072       -0.2072                GLOB UNIF   LLMZUTL
LOAD Z 31073108        -0.20722.08450-0.2072                GLOB UNIF   LLMZUTL
LOAD Z 30873106 2.96190-0.0375       -0.0375                GLOB UNIF   LLMZUTL
LOAD Z 31063123        -0.0375       -0.0375                GLOB UNIF   LLMZUTL
LOAD Z 30883107 2.96190-0.0896       -0.0896                GLOB UNIF   LLMZUTL
LOAD Z 31073124        -0.0896       -0.0896                GLOB UNIF   LLMZUTL
*
***LDS1**    -16.907     1.962    53.000   -13.000     1.962    53.000   -16.907
***LDS2**     10.976    53.000   -13.000    10.976    53.000    -0.050    -0.050
***LDS3**      1.000  50   3   3   1   1265   -2EQUPPRESLLMZUTL
LOAD Z 30913109 1.96190-0.0375       -0.0375                GLOB UNIF   LLMZUTL
LOAD Z 31093003        -0.03753.47650-0.0375                GLOB UNIF   LLMZUTL
LOAD Z 31073108 2.09270-0.2254       -0.2254                GLOB UNIF   LLMZUTL
LOAD Z 31083109        -0.2739       -0.2739                GLOB UNIF   LLMZUTL
LOAD Z 30893108 2.96190-0.0602       -0.0602                GLOB UNIF   LLMZUTL
LOAD Z 31083125        -0.06023.47650-0.0602                GLOB UNIF   LLMZUTL
*
***LDS1**    -19.000    -1.555    53.000   -13.000    -1.555    53.000   -19.000
***LDS2**      1.961    53.000   -13.000     1.961    53.000    -0.050    -0.050
***LDS3**      1.000  50   3   3   1   1265   -2EQUPPRESLLMZUTL
LOAD Z 30583090 5.94480-0.0375       -0.0375                GLOB UNIF   LLMZUTL
LOAD Z 30903091        -0.0375       -0.0375                GLOB UNIF   LLMZUTL
LOAD Z 30913109        -0.03751.96110-0.0375                GLOB UNIF   LLMZUTL
LOAD Z 30883089        -0.0879       -0.0879                GLOB UNIF   LLMZUTL
LOAD Z 30893090        -0.1068       -0.1068                GLOB UNIF   LLMZUTL
LOAD Z 30563088 5.94480-0.0375       -0.0375                GLOB UNIF   LLMZUTL
LOAD Z 30573089 5.94480-0.0750       -0.0750                GLOB UNIF   LLMZUTL
LOAD Z 30883107        -0.03752.96110-0.0375                GLOB UNIF   LLMZUTL
LOAD Z 30893108        -0.07502.96110-0.0750                GLOB UNIF   LLMZUTL
*
***LDS1**    -10.000    -7.500    53.000    -4.000    -7.500    53.000   -10.000
***LDS2**      7.500    53.000    -4.000     7.500    53.000    -0.050    -0.050
***LDS3**      1.000  50   3   3   1   1265   -2EQUPPRESLLMZ1
LOAD Z 30593060        -0.0938       -0.0938                GLOB UNIF   LLMZ1
LOAD Z 30603061        -0.1065       -0.1065                GLOB UNIF   LLMZ1
LOAD Z 30613078        -0.0375       -0.0375                GLOB UNIF   LLMZ1
LOAD Z 30783094        -0.0375       -0.0375                GLOB UNIF   LLMZ1
LOAD Z 30923093        -0.1875       -0.1875                GLOB UNIF   LLMZ1
LOAD Z 30933094        -0.2130       -0.2130                GLOB UNIF   LLMZ1
LOAD Z 30943101        -0.0375       -0.0375                GLOB UNIF   LLMZ1
LOAD Z 31013112        -0.0375       -0.0375                GLOB UNIF   LLMZ1
LOAD Z 31103111        -0.0938       -0.0938                GLOB UNIF   LLMZ1
LOAD Z 31113112        -0.1065       -0.1065                GLOB UNIF   LLMZ1
LOAD Z 30593092        -0.0375       -0.0375                GLOB UNIF   LLMZ1
LOAD Z 30603093        -0.0750       -0.0750                GLOB UNIF   LLMZ1
LOAD Z 30923110        -0.0375       -0.0375                GLOB UNIF   LLMZ1
LOAD Z 30933111        -0.0750       -0.0750                GLOB UNIF   LLMZ1
LOADCN 266
LOADLB266 LIVE LOAD ON ESCAPE ROUTE MEZZANINE DECK
*
***LDS1**    -22.000    18.420    53.000   -22.000    15.087    53.000    21.040
***LDS2**     18.420    53.000    21.040    15.087    53.000    -0.109    -0.109
***LDS3**      1.000  50   1   3   0   1266   -2EQUPPRESLLME1
LOAD Z 30033142 0.83690-0.32763.33330-0.3276                GLOB UNIF   LLME1
LOAD Z 30043150 0.83690-0.32993.33330-0.3299                GLOB UNIF   LLME1
LOAD Z 31293145 1.55565-0.35643.33330-0.3564                GLOB UNIF   LLME1
LOAD Z 31333148 1.55565-0.36783.33330-0.3678                GLOB UNIF   LLME1
LOAD Z 31233139 2.08690-0.16383.33330-0.1638                GLOB UNIF   LLME1
LOAD Z 31243140 2.08690-0.32763.33330-0.3276                GLOB UNIF   LLME1
LOAD Z 31253141 2.08690-0.32763.33330-0.3276                GLOB UNIF   LLME1
LOAD Z 31273143 2.08690-0.32763.33330-0.3276                GLOB UNIF   LLME1
LOAD Z 31283144 2.08690-0.32763.33330-0.3276                GLOB UNIF   LLME1
```

```
LOAD Z 31303146 2.08690-0.38523.33330-0.3852                GLOB UNIF   LLME1
LOAD Z 31323147 2.08690-0.38523.33330-0.3852                GLOB UNIF   LLME1
LOAD Z 31343149 2.08690-0.35033.33330-0.3503                GLOB UNIF   LLME1
LOAD Z 31363151 2.08690-0.30943.33330-0.3094                GLOB UNIF   LLME1
LOAD Z 31373152 2.08690-0.41393.33330-0.4139                GLOB UNIF   LLME1
*
***LDS1**     15.833    15.407    53.000    15.833              53.000    21.040
***LDS2**     15.407    53.000    21.040              53.000    -0.109    -0.109
***LDS3**      1.000  50   1   3   1   1266   -2EQUPPRESLLME2
LOAD Z 31363137        -0.2816       -0.2816                GLOB UNIF   LLME2
LOAD Z 31373138        -0.28162.37333-0.2816                GLOB UNIF   LLME2
LOAD Z 30973098        -0.2048       -0.2048                GLOB UNIF   LLME2
LOAD Z 30983099        -0.2048       -0.2048                GLOB UNIF   LLME2
LOAD Z 30993100        -0.20482.37333-0.2048                GLOB UNIF   LLME2
LOAD Z 31193120        -0.3549       -0.3549                GLOB UNIF   LLME2
LOAD Z 31203121        -0.35492.37333-0.3549                GLOB UNIF   LLME2
LOAD Z 30973119        -0.0774       -0.0774                GLOB UNIF   LLME2
LOAD Z 30993120        -0.2069       -0.2069                GLOB UNIF   LLME2
LOAD Z 31193136        -0.0774       -0.0774                GLOB UNIF   LLME2
LOAD Z 31203137        -0.2069       -0.2069                GLOB UNIF   LLME2
LOAD Z 31363151        -0.07747.75000-0.0774                GLOB UNIF   LLME2
LOAD Z 31373152        -0.20697.75000-0.2069                GLOB UNIF   LLME2
*
***LDS1**     14.664    -4.000    53.000    14.664   -15.765    53.000    17.967
***LDS2**     -4.000    53.000    17.967   -15.765    53.000    -0.109    -0.109
***LDS3**      1.000  90   1   3   1   1266   -2EQUPPRESLLME3
LOAD Z 30023048 0.41400-0.0602       -0.0602                GLOB UNIF   LLME3
LOAD Z 30483049        -0.06022.21680-0.0602                GLOB UNIF   LLME3
LOAD Z 30683069 1.13275-0.0491       -0.0491                GLOB UNIF   LLME3
LOAD Z 30693070        -0.04912.21680-0.0491                GLOB UNIF   LLME3
LOAD Z 30313048 5.98500-0.3246       -0.3246                GLOB UNIF   LLME3
LOAD Z 30483069        -0.3246       -0.3246                GLOB UNIF   LLME3
LOAD Z 30693075        -0.3246       -0.3246                GLOB UNIF   LLME3
LOAD Z 30743075 1.66400-0.0191       -0.0191                GLOB UNIF   LLME3
LOAD Z 30753076        -0.0191       -0.0191                GLOB UNIF   LLME3
LOAD Z 30763077        -0.01911.55013-0.0191                GLOB UNIF   LLME3
*
***LDS1**     -7.860   -15.785    53.000    -7.860   -19.098    53.000    17.997
***LDS2**    -15.785    53.000    17.997   -19.098    53.000    -0.109    -0.109
***LDS3**      1.000 100   1   3   1   1266   -2EQUPPRESLLME4
LOAD Z 30303002 2.65160-0.32763.31340-0.3276                GLOB UNIF   LLME4
LOAD Z 30263043 2.65160-0.35493.31340-0.3549                GLOB UNIF   LLME4
LOAD Z 30243040 2.65160-0.32603.31340-0.3260                GLOB UNIF   LLME4
LOAD Z 30253042 2.65160-0.35493.31340-0.3549                GLOB UNIF   LLME4
LOAD Z 30273044 2.65160-0.35943.31340-0.3594                GLOB UNIF   LLME4
LOAD Z 30283045 2.65160-0.35493.31340-0.3549                GLOB UNIF   LLME4
LOAD Z 30293046 2.65160-0.35033.31340-0.3503                GLOB UNIF   LLME4
LOAD Z 30313048 2.65160-0.39553.31340-0.3955                GLOB UNIF   LLME4
*
***LDS1**    -12.032    -8.550    53.000   -12.032   -11.884    53.000    -4.527
***LDS2**     -8.550    53.000    -4.527   -11.884    53.000    -0.109    -0.109
***LDS3**      1.000 100   1   3   1   1266   -2EQUPPRESLLME5
LOAD Z 30373059 1.11640-0.38573.33330-0.3857                GLOB UNIF   LLME5
LOAD Z 30393060 1.11640-0.43383.33330-0.4338                GLOB UNIF   LLME5
*
***LDS1**    -12.032    -8.550    53.000    -8.699    -8.550    53.000   -12.032
***LDS2**     11.335    53.000    -8.699    11.335    53.000    -0.109    -0.109
***LDS3**      1.000  95   1   3   0   1266   -2EQUPPRESLLME6
LOAD Z 30583059 0.43625-0.5242       -0.5242                GLOB UNIF   LLME6
LOAD Z 30593060        -0.52421.30080-0.5242                GLOB UNIF   LLME6
LOAD Z 30913092 0.43625-0.8190       -0.8190                GLOB UNIF   LLME6
LOAD Z 30923093        -0.81901.30080-0.8190                GLOB UNIF   LLME6
LOAD Z 31093110 0.43625-0.8283       -0.8283                GLOB UNIF   LLME6
LOAD Z 31103111        -0.82831.30080-0.8283                GLOB UNIF   LLME6
*
***LDS1**    -33.059    -1.559    53.000   -33.059    -4.890    53.000   -12.053
***LDS2**     -1.559    53.000   -12.053    -4.890    53.000    -0.109    -0.109
***LDS3**      1.000  95   1   3   0   1266   -2EQUPPRESLLME7
LOAD Z 30583090 2.61000-0.26723.33100-0.2672                GLOB UNIF   LLME7
LOAD Z 30553087 2.61000-0.32423.33100-0.3242                GLOB UNIF   LLME7
```

```
LOAD Z 30513083 2.61000-0.40573.33100-0.4057                GLOB UNIF   LLME7
LOAD Z 30533085 2.61000-0.32083.33100-0.3208                GLOB UNIF   LLME7
LOAD Z 30543086 2.61000-0.32083.33100-0.3208                GLOB UNIF   LLME7
LOAD Z 30563088 2.61000-0.32763.33100-0.3276                GLOB UNIF   LLME7
LOAD Z 30573089 2.61000-0.32763.33100-0.3276                GLOB UNIF   LLME7
LOADCN 270
LOADLB270 LIVE LOAD ON OPEN AREA CELLAR DECK
*
***LDS1**     -4.742    13.000    40.000    11.737    13.000    40.000    -4.742
***LDS2**     16.968    40.000    11.737    16.968    40.000    -0.158    -0.158
***LDS3**      2.000  50   3   3   1   1270   -2EQUPPRESLLCD1
LOAD Z 21872251        -0.24583.96773-0.2458                GLOB UNIF   LLCD1
LOAD Z 21862187 1.75840-0.3129       -0.3129                GLOB UNIF   LLCD1
LOAD Z 21872188        -0.3129       -0.3129                GLOB UNIF   LLCD1
LOAD Z 21882189        -0.3129       -0.3129                GLOB UNIF   LLCD1
LOAD Z 21892190        -0.3129       -0.3129                GLOB UNIF   LLCD1
LOAD Z 21902191        -0.3129       -0.3129                GLOB UNIF   LLCD1
LOAD Z 21912004        -0.31291.98710-0.3129                GLOB UNIF   LLCD1
*
***LDS1**     16.667    16.681    40.000    13.000    13.000    40.000    16.667
***LDS2**     13.000    40.000    16.667    13.000    40.000    -0.158    -0.158
***LDS3**      2.000  50   3   3   0   1270   -2EQUPPRESLLCD2
LOAD Z 20042199        -0.2049       -0.2049                GLOB UNIF   LLCD2
*
***LDS1**     14.500    10.630    40.000    24.000    10.630    40.000    14.500
***LDS2**     16.939    40.000    24.000    16.939    40.000    -0.158    -0.158
***LDS3**      2.000  50   3   3   1   1270   -2EQUPPRESLLCD2
LOAD Z 21482193 10.6302-0.3154       -0.3154                GLOB UNIF   LLCD2
LOAD Z 21492194 10.6302-0.2892       -0.2892                GLOB UNIF   LLCD2
LOAD Z 21942201        -0.28923.93853-0.2892                GLOB UNIF   LLCD2
LOAD Z 21992221        -0.31540.25761-0.3154                GLOB UNIF   LLCD2
LOAD Z 20042193 1.50000-0.4974       -0.4974                GLOB UNIF   LLCD2
LOAD Z 21932194        -0.4974       -0.4974                GLOB UNIF   LLCD2
LOAD Z 21942195        -0.4974       -0.4974                GLOB UNIF   LLCD2
LOAD Z 21952203        -0.14463.93853-0.1446                GLOB UNIF   LLCD2
LOAD Z 21502195 10.6302-0.1446       -0.1446                GLOB UNIF   LLCD2
*
***LDS1**     20.333    -1.000    40.000    24.000    -1.000    40.000    20.333
***LDS2**     10.630    40.000    24.000    10.630    40.000    -0.158    -0.158
***LDS3**      1.000  50   3   3   1   1270   -2EQUPPRESLLCD2
LOAD Z 20982149 12.0000-0.1446       -0.1446                GLOB UNIF   LLCD2
LOAD Z 21492194        -0.14463.66667-0.1446                GLOB UNIF   LLCD2
LOAD Z 20992150 12.0000-0.1446       -0.1446                GLOB UNIF   LLCD2
LOAD Z 21492150        -0.9171       -0.9171                GLOB UNIF   LLCD2
LOAD Z 21502195        -0.14463.66667-0.1446                GLOB UNIF   LLCD2
*
***LDS1**     13.000   -13.000    40.000    22.833   -23.000    40.000    13.000
***LDS2**    -23.000    40.000    13.000   -23.000    40.000    -0.158    -0.158
***LDS3**      2.000  50   3   3   0   1270   -2EQUPPRESLLCD4
LOAD Z 20712067        -0.5529       -0.5529                GLOB UNIF   LLCD4
LOAD Z 20762071        -0.5529       -0.5529                GLOB UNIF   LLCD4
LOAD Z 20022076        -0.5529       -0.5529                GLOB UNIF   LLCD4
*
***LDS1**    -16.333   -14.125    40.000   -23.000   -14.125    40.000   -16.333
***LDS2**    -14.125    40.000   -23.000   -14.125    40.000    -0.158    -0.158
***LDS3**      2.000  50   3   3   1   1270   -2EQUPPRESLLCD5
LOAD Z 20722084 5.54117-0.2628       -0.2628                GLOB UNIF   LLCD5
LOAD Z 20842117        -0.2628       -0.2628                GLOB UNIF   LLCD5
LOAD Z 20862119        -0.1315       -0.1315                GLOB UNIF   LLCD5
LOAD Z 21172136        -0.2628       -0.2628                GLOB UNIF   LLCD5
LOAD Z 21192137        -0.1315       -0.1315                GLOB UNIF   LLCD5
LOAD Z 21374217        -0.13152.76140-0.1315                GLOB UNIF   LLCD5
LOAD Z 20832084        -0.3746       -0.3746                GLOB UNIF   LLCD5
LOAD Z 20842085        -0.3746       -0.3746                GLOB UNIF   LLCD5
LOAD Z 20852086        -0.3746       -0.3746                GLOB UNIF   LLCD5
LOAD Z 21162117        -0.5126       -0.5126                GLOB UNIF   LLCD5
LOAD Z 21172118        -0.5126       -0.5126                GLOB UNIF   LLCD5
LOAD Z 21182119        -0.5126       -0.5126                GLOB UNIF   LLCD5
LOAD Z 20832116        -0.1315       -0.1315                GLOB UNIF   LLCD5
LOAD Z 21162135        -0.1315       -0.1315                GLOB UNIF   LLCD5
```

```
LOAD Z 21352136        -0.4445       -0.4445                GLOB UNIF   LLCD5
LOAD Z 21362137        -0.4445       -0.4445                GLOB UNIF   LLCD5
LOAD Z 42222083 4.87450-0.1315       -0.1315                GLOB UNIF   LLCD5
*
***LDS1**     24.000   -23.000    40.000    13.000   -23.000    40.000    24.000
***LDS2**    -23.000    40.000    13.000   -23.000    40.000    -0.158    -0.158
***LDS3**      2.000  50   3   3   1   1270   -2EQUPPRESLLCD4
LOAD Z 20652076        -0.2892       -0.2892                GLOB UNIF   LLCD4
LOAD Z 20662071        -0.2892       -0.2892                GLOB UNIF   LLCD4
LOAD Z 20712098        -0.2892       -0.2892                GLOB UNIF   LLCD4
LOAD Z 20972148        -0.28928.50000-0.2892                GLOB UNIF   LLCD4
LOAD Z 20982149        -0.28928.50000-0.2892                GLOB UNIF   LLCD4
LOAD Z 20022097        -1.0646       -1.0646                GLOB UNIF   LLCD4
LOAD Z 20022108        -0.1446       -0.1446                GLOB UNIF   LLCD4
LOAD Z 20642002        -0.1446       -0.1446                GLOB UNIF   LLCD4
LOAD Z 20672068        -0.3943       -0.3943                GLOB UNIF   LLCD4
LOAD Z 20972098        -1.0646       -1.0646                GLOB UNIF   LLCD4
LOAD Z 20982099        -1.0646       -1.0646                GLOB UNIF   LLCD4
LOAD Z 21082128        -0.1446       -0.1446                GLOB UNIF   LLCD4
LOAD Z 20652066        -0.3943       -0.3943                GLOB UNIF   LLCD4
LOAD Z 20662067        -0.3943       -0.3943                GLOB UNIF   LLCD4
LOAD Z 20682099        -0.1446       -0.1446                GLOB UNIF   LLCD4
LOAD Z 20992150        -0.14468.50000-0.1446                GLOB UNIF   LLCD4
*
***LDS1**     -9.750   -13.000    40.000    -6.500   -13.000    40.000    -9.750
***LDS2**               40.000    -6.500              40.000    -0.158    -0.158
***LDS3**      2.000  50   3   3   1   1270   -2EQUPPRESLLCD3
LOAD Z 20882102        -0.1281       -0.1281                GLOB UNIF   LLCD3
LOAD Z 20892110        -0.1281       -0.1281                GLOB UNIF   LLCD3
LOAD Z 21022139        -0.1281       -0.1281                GLOB UNIF   LLCD3
LOAD Z 21102140        -0.1281       -0.1281                GLOB UNIF   LLCD3
LOAD Z 20882089        -0.5126       -0.5126                GLOB UNIF   LLCD3
LOAD Z 21392140        -0.5126       -0.5126                GLOB UNIF   LLCD3
*
***LDS1**     -9.750              40.000    -6.500              40.000    -9.750
***LDS2**      9.000    40.000    -6.500     9.000    40.000    -0.158    -0.158
***LDS3**      1.000  50   3   3   1   1270   -2EQUPPRESLLCD3
LOAD Z 21392170        -0.12813.25000-0.1281                GLOB UNIF   LLCD3
LOAD Z 21402162        -0.1281       -0.1281                GLOB UNIF   LLCD3
LOAD Z 21622186        -0.12812.50000-0.1281                GLOB UNIF   LLCD3
LOAD Z 21392140        -0.7097       -0.7097                GLOB UNIF   LLCD3
*
***LDS1**              -13.000    40.000     8.754   -13.000    40.000
***LDS2**     -7.500    40.000     8.754    -7.500    40.000    -0.158    -0.158
***LDS3**      2.000  50   3   3   1   1270   -2EQUPPRESLLCD3
LOAD Z 20932104        -0.2563       -0.2563                GLOB UNIF   LLCD3
LOAD Z 20922093        -0.2169       -0.2169                GLOB UNIF   LLCD3
LOAD Z 20932094        -0.2169       -0.2169                GLOB UNIF   LLCD3
LOAD Z 20942095        -0.21692.25360-0.2169                GLOB UNIF   LLCD3
LOAD Z 20942105        -0.3059       -0.3059                GLOB UNIF   LLCD3
LOAD Z 21032104        -0.2169       -0.2169                GLOB UNIF   LLCD3
LOAD Z 21042105        -0.2169       -0.2169                GLOB UNIF   LLCD3
LOAD Z 21052106        -0.2169       -0.2169                GLOB UNIF   LLCD3
LOAD Z 21062107        -0.21691.25360-0.2169                GLOB UNIF   LLCD3
LOAD Z 20922103        -0.1281       -0.1281                GLOB UNIF   LLCD3
*
***LDS1**      5.000    -5.000    40.000              -5.000    40.000     5.000
***LDS2**     -7.500    40.000              -7.500    40.000    -0.158    -0.158
***LDS3**      2.000  50   3   3   1   1270   -2EQUPPRESLLCD3
LOAD Z 21232124        -0.0986       -0.0986                GLOB UNIF   LLCD3
LOAD Z 21242125        -0.0986       -0.0986                GLOB UNIF   LLCD3
LOAD Z 21032104        -0.0986       -0.0986                GLOB UNIF   LLCD3
LOAD Z 21042105        -0.09863.25000-0.0986                GLOB UNIF   LLCD3
LOAD Z 21032123        -0.3943       -0.3943                GLOB UNIF   LLCD3
*
***LDS1**                5.000    40.000               9.000    40.000    -6.500
***LDS2**      5.000    40.000    -6.500     9.000    40.000    -0.158    -0.158
***LDS3**      1.000  50   3   3   1   1270   -2EQUPPRESLLCD3
LOAD Z 21402162 5.00000-0.1281       -0.1281                GLOB UNIF   LLCD3
LOAD Z 21582187        -0.25634.00000-0.2563                GLOB UNIF   LLCD3
```

```
LOAD Z 21622186        -0.12812.50000-0.1281                GLOB UNIF   LLCD3
LOAD Z 21592164        -0.1281       -0.1281                GLOB UNIF   LLCD3
LOAD Z 21642173        -0.12811.50000-0.1281                GLOB UNIF   LLCD3
*
***LDS1**                7.500    40.000     6.500     7.500    40.000
***LDS2**      9.000    40.000     6.500     9.000    40.000    -0.158    -0.158
***LDS3**      1.000  50   3   3   1   1270   -2EQUPPRESLLCD3
LOAD Z 21642165        -0.1183       -0.1183                GLOB UNIF   LLCD3
LOAD Z 21652166        -0.1183       -0.1183                GLOB UNIF   LLCD3
LOAD Z 21662172        -0.12811.50000-0.1281                GLOB UNIF   LLCD3
LOAD Z 21642173        -0.12811.50000-0.1281                GLOB UNIF   LLCD3
*
***LDS1**                5.000    40.000     5.000     5.000    40.000
***LDS2**      7.500    40.000     7.500     7.500    40.000    -0.158    -0.158
***LDS3**      2.000  50   3   3   0   1270   -2EQUPPRESLLCD3
LOAD Z 21592160        -0.1972       -0.1972                GLOB UNIF   LLCD3
LOAD Z 21602161        -0.1972       -0.1972                GLOB UNIF   LLCD3
LOAD Z 21642165        -0.1972       -0.1972                GLOB UNIF   LLCD3
LOAD Z 21652166        -0.1972       -0.1972                GLOB UNIF   LLCD3
LOAD Z 21662167        -0.1972       -0.1972                GLOB UNIF   LLCD3
*
***LDS1**     -5.000     5.000    40.000    -5.000              40.000    -5.000
***LDS2**      5.000    40.000    -5.000              40.000    -0.158    -0.158
***LDS3**      2.000  50   3   3   1   1270   -2EQUPPRESLLCD3
LOAD Z 21402162        -0.05915.00000-0.0591                GLOB UNIF   LLCD3
LOAD Z 21412157        -0.0591       -0.0591                GLOB UNIF   LLCD3
LOAD Z 21402141        -0.3943       -0.3943                GLOB UNIF   LLCD3
*
***LDS1**     -5.000    -5.000    40.000    -5.000              40.000    -6.500
***LDS2**     -5.000    40.000    -6.500              40.000    -0.158    -0.158
***LDS3**      2.000  50   3   3   1   1270   -2EQUPPRESLLCD3
LOAD Z 21102140 1.50000-0.0591       -0.0591                GLOB UNIF   LLCD3
LOAD Z 21212129        -0.0591       -0.0591                GLOB UNIF   LLCD3
LOAD Z 21292141        -0.0591       -0.0591                GLOB UNIF   LLCD3
LOAD Z 21402141        -0.3943       -0.3943                GLOB UNIF   LLCD3
*
***LDS1**      7.083    -4.500    40.000     8.708    -4.500    40.000     7.083
***LDS2**               40.000     8.708              40.000    -0.158    -0.158
***LDS3**      1.000  50   3   3   1   1270   -2EQUPPRESLLCD3
LOAD Z 21262145        -0.1281       -0.1281                GLOB UNIF   LLCD3
LOAD Z 21452146        -0.17741.62497-0.1774                GLOB UNIF   LLCD3
*
***LDS1**      7.083              40.000     8.708              40.000     7.083
***LDS2**      4.500    40.000     8.708     4.500    40.000    -0.158    -0.158
***LDS3**      1.000  50   3   3   1   1270   -2EQUPPRESLLCD3
LOAD Z 21452154        -0.1281       -0.1281                GLOB UNIF   LLCD3
LOAD Z 21452146        -0.17741.62497-0.1774                GLOB UNIF   LLCD3
*
***LDS1**     -6.500   -13.000    40.000    -3.250   -13.000    40.000    -6.500
***LDS2**     -5.000    40.000    -3.250    -5.000    40.000    -0.158    -0.158
***LDS3**      1.000  50   3   3   1   1270   -2EQUPPRESLLCD3
LOAD Z 20892110        -0.1281       -0.1281                GLOB UNIF   LLCD3
LOAD Z 20912122        -0.1281       -0.1281                GLOB UNIF   LLCD3
LOAD Z 21102140        -0.1281       -0.1281                GLOB UNIF   LLCD3
*
***LDS1**      7.083     7.083    40.000     7.083     4.500    40.000     5.000
***LDS2**      5.000    40.000     5.000     5.000    40.000    -0.158    -0.158
***LDS3**      1.000  50   3   3   0   1270   -2EQUPPRESLLCD3
LOAD Z 21542163        -0.1643       -0.1643                GLOB UNIF   LLCD3
*
***LDS1**      7.083     4.500    40.000     7.083              40.000     7.083
***LDS2**      4.500    40.000     7.083              40.000    -0.158    -0.158
***LDS3**      2.000  50   3   3   1   1270   -2EQUPPRESLLCD3
LOAD Z 21442161        -0.08224.50000-0.0822                GLOB UNIF   LLCD3
LOAD Z 21452154        -0.0822       -0.0822                GLOB UNIF   LLCD3
LOAD Z 21442145        -0.3549       -0.3549                GLOB UNIF   LLCD3
*
***LDS1**      7.083    -4.500    40.000     7.083              40.000     5.000
***LDS2**     -4.500    40.000     5.000              40.000    -0.158    -0.158
***LDS3**      2.000  50   3   3   0   1270   -2EQUPPRESLLCD3
```

```
LOAD Z 21252144 0.50000-0.1643       -0.1643                GLOB UNIF   LLCD3
LOAD Z 21262145        -0.1643       -0.1643                GLOB UNIF   LLCD3
*
***LDS1**      7.083    -7.083    40.000     7.083    -4.500    40.000     5.000
***LDS2**     -5.000    40.000     5.000    -5.000    40.000    -0.158    -0.158
***LDS3**      2.000  50   3   3   0   1270   -2EQUPPRESLLCD3
LOAD Z 21092126        -0.1643       -0.1643                GLOB UNIF   LLCD3
*
***LDS1**      7.083    -7.083    40.000     5.000    -5.000    40.000     7.083
***LDS2**     -4.500    40.000     7.083    -4.500    40.000    -0.158    -0.158
***LDS3**      2.000  50   3   3   0   1270   -2EQUPPRESLLCD3
LOAD Z 21252109        -0.1441       -0.1441                GLOB UNIF   LLCD3
LOAD Z 2165C495        -0.25631.50000-0.2563                GLOB UNIF   LLCD3
LOAD Z 2126C295        -0.17741.62497-0.1774                GLOB UNIF   LLCD3
LOAD Z 2154C395        -0.17741.62497-0.1774                GLOB UNIF   LLCD3
LOADCN 271
LOADLB271 LIVE LOAD ON LAYDOWN AREA CELLAR DECK
*
***LDS1**    -36.750    23.226    40.000   -32.823    23.226    40.000   -36.750
***LDS2**     29.750    40.000   -32.823    29.750    40.000    -0.300    -0.300
***LDS3**      1.000  50   3   3   1   1271   -2EQUPPRESLLCDLAY
LOAD Z 21782205 10.2263-0.3172       -0.3172                GLOB UNIF   LLCDLAY
LOAD Z 22052229        -0.3172       -0.3172                GLOB UNIF   LLCDLAY
LOAD Z 21772204 10.2263-0.2719       -0.2719                GLOB UNIF   LLCDLAY
LOAD Z 22042228        -0.2719       -0.2719                GLOB UNIF   LLCDLAY
LOAD Z 22282229        -0.2938       -0.2938                GLOB UNIF   LLCDLAY
LOAD Z 22292230        -0.29380.30220-0.2938                GLOB UNIF   LLCDLAY
LOAD Z 22042205        -0.6848       -0.6848                GLOB UNIF   LLCDLAY
LOAD Z 22052206        -0.68480.30220-0.6848                GLOB UNIF   LLCDLAY
*
LOADCN 272
LOADLB272 LIVE LOAD ON ESCAPE ROUTE ON CELLAR DECK
*
***LDS1**    -28.979    24.780    40.000   -28.979    21.447    40.000    -9.667
***LDS2**     24.780    40.000    -9.667    21.447    40.000    -0.067    -0.067
***LDS3**      1.000  50   1   3   0   1272   -2EQUPPRESLLCD1
LOAD Z 21852213 8.44700-0.22503.33300-0.2250                GLOB UNIF   LLCD1
LOAD Z 23662210 1.03033-0.22223.33300-0.2222                GLOB UNIF   LLCD1
LOAD Z 42102207 1.03033-0.29023.33300-0.2902                GLOB UNIF   LLCD1
LOAD Z 42162211 1.03033-0.33053.33300-0.3305                GLOB UNIF   LLCD1
LOAD Z 22022209        -0.21942.83330-0.2194                GLOB UNIF   LLCD1
LOAD Z 23652202 1.03033-0.2194       -0.2194                GLOB UNIF   LLCD1
*
***LDS1**    -28.979    21.447    40.000   -28.979    -4.247    40.000   -25.646
***LDS2**     21.447    40.000   -25.646    -4.247    40.000    -0.067    -0.067
***LDS3**      1.000  50   1   3   0   1272   -2EQUPPRESLLCD2
LOAD Z 21152134 1.50308-0.2222       -0.2222                GLOB UNIF   LLCD2
LOAD Z 21344211        -0.2222       -0.2222                GLOB UNIF   LLCD2
LOAD Z 21804210        -0.2222       -0.2222                GLOB UNIF   LLCD2
LOAD Z 42102207        -0.22225.41667-0.2222                GLOB UNIF   LLCD2
LOAD Z 42112180        -0.2222       -0.2222                GLOB UNIF   LLCD2
*
***LDS1**    -39.156    -0.915    40.000   -39.156    -4.247    40.000   -28.979
***LDS2**     -0.915    40.000   -28.979    -4.247    40.000    -0.067    -0.067
***LDS3**      1.000  90   1   3   0   1272   -2EQUPPRESLLCD3
LOAD Z 21122131 1.50308-0.31873.33200-0.3187                GLOB UNIF   LLCD3
LOAD Z 21132132 1.50308-0.21663.33200-0.2166                GLOB UNIF   LLCD3
LOAD Z 21142133 1.50308-0.14313.33200-0.1431                GLOB UNIF   LLCD3
*
***LDS1**    -39.156    -4.247    40.000   -39.156   -33.500    40.000   -36.000
***LDS2**     -4.247    40.000   -36.000   -33.500    40.000    -0.067    -0.067
***LDS3**      1.000  90   1   3   0   1272   -2EQUPPRESLLCD3
LOAD Z 20112019        -0.2104       -0.2104                GLOB UNIF   LLCD3
LOAD Z 20192048        -0.2104       -0.2104                GLOB UNIF   LLCD3
LOAD Z 20482079        -0.2104       -0.2104                GLOB UNIF   LLCD3
LOAD Z 20792112        -0.2104       -0.2104                GLOB UNIF   LLCD3
LOAD Z 21122131        -0.21045.75008-0.2104                GLOB UNIF   LLCD3
*
***LDS1**    -36.000   -30.162    40.000   -36.000   -33.500    40.000    -2.911
***LDS2**    -30.162    40.000    -2.911   -33.500    40.000    -0.067    -0.067
```

```
***LDS3**      1.000  90   1   3   0   1272   -2EQUPPRESLLCD5
LOAD Z 20112019        -0.10833.33800-0.1083                GLOB UNIF   LLCD5
LOAD Z 20122020        -0.21663.33800-0.2166                GLOB UNIF   LLCD5
LOAD Z 20142022        -0.21663.33800-0.2166                GLOB UNIF   LLCD5
LOAD Z 20162024        -0.22223.33800-0.2222                GLOB UNIF   LLCD5
LOAD Z 20172025        -0.22223.33800-0.2222                GLOB UNIF   LLCD5
LOAD Z 20872026        -0.21943.33800-0.2194                GLOB UNIF   LLCD5
LOAD Z 20962027        -0.21663.33800-0.2166                GLOB UNIF   LLCD5
LOAD Z 21272028        -0.22803.33800-0.2280                GLOB UNIF   LLCD5
LOAD Z 21432155        -0.11973.33800-0.1197                GLOB UNIF   LLCD5
LOAD Z 20132021        -0.21663.33800-0.2166                GLOB UNIF   LLCD5
LOAD Z 20152023        -0.21943.33800-0.2194                GLOB UNIF   LLCD5
*
***LDS1**     -9.197   -26.126    40.000    -9.197   -29.500    40.000    27.494
***LDS2**    -26.126    40.000    27.494   -29.500    40.000    -0.067    -0.067
***LDS3**      3.000  10   1   3   0   1272   -2EQUPPRESLLCD6
LOAD Z 20282058        -0.26313.37400-0.2631                GLOB UNIF   LLCD6
LOAD Z 20312061        -0.21663.37400-0.2166                GLOB UNIF   LLCD6
LOAD Z 20322062        -0.21663.37400-0.2166                GLOB UNIF   LLCD6
LOAD Z 20332063        -0.21663.37400-0.2166                GLOB UNIF   LLCD6
LOAD Z 20352376        -0.20623.37400-0.2062                GLOB UNIF   LLCD6
LOAD Z 20362377        -0.24443.37400-0.2444                GLOB UNIF   LLCD6
LOAD Z 20382042        -0.17043.37400-0.1704                GLOB UNIF   LLCD6
LOAD Z 20342064        -0.14653.37400-0.1465                GLOB UNIF   LLCD6
LOAD Z 20292059        -0.21663.37400-0.2166                GLOB UNIF   LLCD6
LOAD Z 20372043        -0.18473.37400-0.1847                GLOB UNIF   LLCD6
LOAD Z 20302060        -0.24163.37400-0.2416                GLOB UNIF   LLCD6
LOAD Z 23742375        -0.12223.37400-0.1222                GLOB UNIF   LLCD6
*
***LDS1**     24.000    20.281    40.000    24.000   -26.126    40.000    27.494
***LDS2**     20.281    40.000    27.494   -26.126    40.000    -0.067    -0.067
***LDS3**      1.000  10   1   3   0   1272   -2EQUPPRESLLCD7
LOAD Z 20382042 3.37400-0.1704       -0.1704                GLOB UNIF   LLCD7
LOAD Z 20422069        -0.1704       -0.1704                GLOB UNIF   LLCD7
LOAD Z 20692100        -0.1704       -0.1704                GLOB UNIF   LLCD7
LOAD Z 21002151        -0.1704       -0.1704                GLOB UNIF   LLCD7
LOAD Z 21512196        -0.1704       -0.1704                GLOB UNIF   LLCD7
LOAD Z 21962224        -0.170412.9250-0.1704                GLOB UNIF   LLCD7
LOAD Z 20372043 3.37400-0.0625       -0.0625                GLOB UNIF   LLCD7
LOAD Z 20432068        -0.0625       -0.0625                GLOB UNIF   LLCD7
LOAD Z 20682099        -0.0625       -0.0625                GLOB UNIF   LLCD7
LOAD Z 21952203        -0.062511.0427-0.0625                GLOB UNIF   LLCD7
LOAD Z 20992150        -0.0625       -0.0625                GLOB UNIF   LLCD7
LOAD Z 21502195        -0.0625       -0.0625                GLOB UNIF   LLCD7
*
***LDS1**    -13.000    20.281    40.000   -13.000    16.950    40.000    24.246
***LDS2**     20.281    40.000    24.246    16.950    40.000    -0.067    -0.067
***LDS3**      1.000  10   1   3   0   1272   -2EQUPPRESLLCD8
LOAD Z 21852213 3.95000-0.32503.33100-0.3250                GLOB UNIF   LLCD8
LOAD Z 21862214 3.95000-0.21663.33100-0.2166                GLOB UNIF   LLCD8
LOAD Z 21872251 3.95000-0.21663.33100-0.2166                GLOB UNIF   LLCD8
LOAD Z 21892362 3.95000-0.21663.33100-0.2166                GLOB UNIF   LLCD8
LOAD Z 21902363 3.95000-0.21663.33100-0.2166                GLOB UNIF   LLCD8
LOAD Z 21912364 3.95000-0.33893.33100-0.3389                GLOB UNIF   LLCD8
LOAD Z 21942201 3.95000-0.24443.33100-0.2444                GLOB UNIF   LLCD8
LOAD Z 21992221 0.26908-0.35283.33100-0.3528                GLOB UNIF   LLCD8
LOAD Z 21952203 3.95000-0.13863.33100-0.1386                GLOB UNIF   LLCD8
LOAD Z 21882361 3.95000-0.21663.33100-0.2166                GLOB UNIF   LLCD8
*
***LDS1**    -36.750    16.875    40.000   -36.750    13.000    40.000   -29.500
***LDS2**     16.875    40.000   -29.500    13.000    40.000    -0.067    -0.067
***LDS3**      1.000  10   1   3   0   1272   -2EQUPPRESLLCD9
LOAD Z 21782205        -0.24163.87500-0.2416                GLOB UNIF   LLCD9
LOAD Z 21772204        -0.12093.87500-0.1209                GLOB UNIF   LLCD9
LOAD Z 21792206        -0.12093.87500-0.1209                GLOB UNIF   LLCD9
LOADCN 275
LOADLB275 LIVE LOAD ON OPEN AREA SUBCELLAR DECK
*
***LDS1**     -9.615    -8.908    24.000    -3.500    -8.908    24.000    -9.615
***LDS2**     -6.500    24.000    -3.500    -6.500    24.000    -0.050    -0.050
```

```
***LDS3**      2.000  50   3   3   1   1275   -2EQUPPRESLLMZ1
LOAD Z 10401046 3.64408-0.1529       -0.1529                GLOB UNIF   LLSC1
LOAD Z 10461055        -0.1529       -0.1529                GLOB UNIF   LLSC1
LOAD Z 10541055 2.93668-0.0602       -0.0602                GLOB UNIF   LLSC1
*
***LDS1**     -3.500    -6.500    24.000              -6.500    24.000    -3.500
***LDS2**     -6.500    24.000              -6.500    24.000    -0.050    -0.050
***LDS3**      2.000  50   3   3   1   1275   -2EQUPPRESLLMZ1
LOAD Z 10401046 3.64408-0.0438       -0.0438                GLOB UNIF   LLSC1
LOAD Z 10411047 4.09200-0.0438       -0.0438                GLOB UNIF   LLSC1
LOAD Z 10461047        -0.0691       -0.0691                GLOB UNIF   LLSC1
LOAD Z 10461055        -0.0438       -0.0438                GLOB UNIF   LLSC1
*
***LDS1**     -4.990   -18.500    24.000             -18.500    24.000    -4.990
***LDS2**    -13.000    24.000             -13.000    24.000    -0.050    -0.050
***LDS3**      1.000  50   3   3   1   1275   -2EQUPPRESLLMZ2
LOAD Z 10311032 3.22908-0.0688       -0.0688                GLOB UNIF   LLSC2
LOAD Z 10321041        -0.1248       -0.1248                GLOB UNIF   LLSC2
LOAD Z 10391040 3.67700-0.0688       -0.0688                GLOB UNIF   LLSC2
LOAD Z 10401041        -0.0789       -0.0789                GLOB UNIF   LLSC2
*
***LDS1**     -8.667   -25.555    24.000    23.823   -25.555    24.000    -8.667
***LDS2**    -24.000    24.000    23.823   -24.000    24.000    -0.050    -0.050
***LDS3**      1.000  50   1   3   1   1275   -2EQUPPRESLLMZ2
LOAD Z 10161024 3.94460-0.1084       -0.1084                GLOB UNIF   LLSC2
LOAD Z 10181025 3.49668-0.1896       -0.1896                GLOB UNIF   LLSC2
LOAD Z 10191026 3.94460-0.1625       -0.1625                GLOB UNIF   LLSC2
LOAD Z 10201027 3.94460-0.1750       -0.1750                GLOB UNIF   LLSC2
LOAD Z 10211028 3.49668-0.1768       -0.1768                GLOB UNIF   LLSC2
LOAD Z 10241025        -0.0412       -0.0412                GLOB UNIF   LLSC2
LOAD Z 10251026        -0.0389       -0.0389                GLOB UNIF   LLSC2
LOAD Z 10261027        -0.0389       -0.0389                GLOB UNIF   LLSC2
LOAD Z 10271028        -0.0389       -0.0389                GLOB UNIF   LLSC2
LOAD Z 10281029        -0.03892.42697-0.0389                GLOB UNIF   LLSC2
*
***LDS1**     15.908   -24.000    24.000    20.500   -24.000    24.000    15.908
***LDS2**    -13.000    24.000    20.500   -13.000    24.000    -0.050    -0.050
***LDS3**      1.000  50   1   3   1   1275   -2EQUPPRESLLMZ2
LOAD Z 10021044 2.45988-0.0688       -0.0688                GLOB UNIF   LLSC2
LOAD Z 10271028 2.45988-0.0688       -0.0688                GLOB UNIF   LLSC2
LOAD Z 13001301 2.45988-0.1375       -0.1375                GLOB UNIF   LLSC2
LOAD Z 10351044        -0.1148       -0.1148                GLOB UNIF   LLSC2
*
***LDS1**     20.500   -24.000    24.000    23.823   -24.000    24.000    20.500
***LDS2**    -14.902    24.000    23.823   -14.902    24.000    -0.050    -0.050
***LDS3**      1.000  50   1   3   1   1275   -2EQUPPRESLLMZ2
LOAD Z 10281029        -0.07362.42697-0.0736                GLOB UNIF   LLSC2
LOAD Z 10351036        -0.16992.42697-0.1699                GLOB UNIF   LLSC2
LOAD Z 10351044        -0.08313.32280-0.0831                GLOB UNIF   LLSC2
LOAD Z 10281301        -0.1148       -0.1148                GLOB UNIF   LLSC2
LOAD Z 10281301        -0.0831       -0.0831                GLOB UNIF   LLSC2
LOAD Z 13011035        -0.1148       -0.1148                GLOB UNIF   LLSC2
LOAD Z 13011035        -0.0831       -0.0831                GLOB UNIF   LLSC2
*
LOADCN 276                        0.500
LOADLB276 LIVE LOAD ON ESCAPE ROUTE SUB CELLAR DECK
*
***LDS1**    -13.000    -2.000    24.000    -8.500    -2.000    24.000   -13.000
***LDS2**     16.667    24.000    -8.500    16.667    24.000    -0.100    -0.100
***LDS3**      1.000  50   1   3   0   1276   -2EQUPPRESLLSC1
LOAD Z 10031073        -0.4257       -0.4257                GLOB UNIF   LLSC1
LOAD Z 10591060        -0.3054       -0.3054                GLOB UNIF   LLSC1
LOAD Z 10651066        -0.6867       -0.6867                GLOB UNIF   LLSC1
LOAD Z 10681069        -0.5931       -0.5931                GLOB UNIF   LLSC1
LOAD Z 11021103        -0.1833       -0.1833                GLOB UNIF   LLSC1
*
***LDS1**    -13.000    -2.000    24.000   -13.000   -13.000    24.000    -8.667
***LDS2**     -2.000    24.000    -8.667   -13.000    24.000    -0.100    -0.100
***LDS3**      1.000  50   1   3   0   1276   -2EQUPPRESLLSC2
LOAD Z 10011054        -0.4334       -0.4334                GLOB UNIF   LLSC2
```

```
LOAD Z 10541059        -0.4334       -0.4334                GLOB UNIF   LLSC2
*
***LDS1**     -8.667   -13.000    24.000    27.410   -13.000    24.000    -8.667
***LDS2**     -9.000    24.000    27.410    -9.000    24.000    -0.100    -0.100
***LDS3**      1.000  50   1   3   0   1276   -2EQUPPRESLLSC3
LOAD Z 10021044        -0.4000       -0.4000                GLOB UNIF   LLSC3
LOAD Z 10391040        -0.4000       -0.4000                GLOB UNIF   LLSC3
LOAD Z 10401041        -0.4000       -0.4000                GLOB UNIF   LLSC3
LOAD Z 10411042        -0.4000       -0.4000                GLOB UNIF   LLSC3
LOAD Z 10421002        -0.4000       -0.4000                GLOB UNIF   LLSC3
LOAD Z 10441045        -0.4068       -0.4068                GLOB UNIF   LLSC3
*
***LDS1**     24.080   -29.500    24.000    27.750   -29.500    24.000    24.080
***LDS2**    -13.000    24.000    27.750   -13.000    24.000    -0.100    -0.100
***LDS3**      1.000  50   1   3   0   1276   -2EQUPPRESLLSC4
LOAD Z 10281029 3.13208-0.5500       -0.5500                GLOB UNIF   LLSC4
LOAD Z 10351036 3.13208-0.5500       -0.5500                GLOB UNIF   LLSC4
LOAD Z 10441045 3.13208-0.2750       -0.2750                GLOB UNIF   LLSC4
LOAD Z 11011022 1.59042-0.2750       -0.2750                GLOB UNIF   LLSC4
*
***LDS1**     -8.667   -29.500    24.000    24.080   -29.500    24.000    -8.667
***LDS2**    -25.730    24.000    24.080   -25.730    24.000    -0.100    -0.100
***LDS3**      1.000  50   1   3   0   1276   -2EQUPPRESLLSC5
LOAD Z 10161017        -0.4049       -0.4049                GLOB UNIF   LLSC5
LOAD Z 10171018        -0.3770       -0.3770                GLOB UNIF   LLSC5
LOAD Z 10181019        -0.3770       -0.3770                GLOB UNIF   LLSC5
LOAD Z 10191020        -0.3770       -0.3770                GLOB UNIF   LLSC5
LOAD Z 10201098        -0.3770       -0.3770                GLOB UNIF   LLSC5
LOAD Z 10211101        -0.3770       -0.3770                GLOB UNIF   LLSC5
LOAD Z 10981021        -0.3770       -0.3770                GLOB UNIF   LLSC5
LOAD Z 11011022        -0.37701.59042-0.3770                GLOB UNIF   LLSC5
*
***LDS1**     -8.667   -25.730    24.000    -5.280   -25.730    24.000    -8.667
***LDS2**    -13.000    24.000    -5.280   -13.000    24.000    -0.100    -0.100
***LDS3**      1.000  50   1   3   0   1276   -2EQUPPRESLLSC6
LOAD Z 10241025        -0.47382.49083-0.4738                GLOB UNIF   LLSC6
LOAD Z 10311032        -0.58172.49083-0.5817                GLOB UNIF   LLSC6
LOAD Z 10391040        -0.27503.38667-0.2750                GLOB UNIF   LLSC6
*
***LDS1**    -13.000   -33.500    24.000    -2.167   -33.500    24.000   -13.000
***LDS2**    -29.500    24.000    -2.167   -29.500    24.000    -0.100    -0.100
***LDS3**      1.000  50   1   3   0   1276   -2EQUPPRESLLSC7
LOAD Z 10101011        -0.2230       -0.2230                GLOB UNIF   LLSC7
LOAD Z 10111012        -0.2148       -0.2148                GLOB UNIF   LLSC7
LOAD Z 10151016        -0.2260       -0.2260                GLOB UNIF   LLSC7
LOAD Z 10161017        -0.2000       -0.2000                GLOB UNIF   LLSC7
LOAD Z 10591107 4.50000-0.1103                              GLOB CONC   ROPE
LOAD Z 10541106 4.50000-0.1103                              GLOB CONC   ROPE
LOADCN 277
LOADLB277 LIVE LOAD ON BOAT LANDING
LOAD Z B553B565        -0.0750       -0.0750                GLOB UNIF   LL-BL
LOAD Z B567B553        -0.0750       -0.0750                GLOB UNIF   LL-BL
LOAD Z B567B571        -0.0750       -0.0750                GLOB UNIF   LL-BL
LOAD Z B550B551        -0.1934       -0.1934                GLOB UNIF   LL-BL
LOAD Z B559B558        -0.1531       -0.1531                GLOB UNIF   LL-BL
LOAD Z B560B559        -0.1531       -0.1531                GLOB UNIF   LL-BL
LOAD Z B549B550        -0.1445       -0.1445                GLOB UNIF   LL-BL
LOAD Z B557B556        -0.1531       -0.1531                GLOB UNIF   LL-BL
LOAD Z B558B557        -0.1531       -0.1531                GLOB UNIF   LL-BL
LOAD Z B551B552        -0.2348       -0.2348                GLOB UNIF   LL-BL
LOAD Z B552B553        -0.1253       -0.1253                GLOB UNIF   LL-BL
LOAD Z B561B560        -0.1531       -0.1531                GLOB UNIF   LL-BL
LOAD Z B562B561        -0.1531       -0.1531                GLOB UNIF   LL-BL
LOAD Z B066B073        -0.1119       -0.1119                GLOB UNIF   LL-BL
LOAD Z B064B069 0.50000-0.1313       -0.1313                GLOB UNIF   LL-BL
LOAD Z B076B075        -0.1531       -0.1531                GLOB UNIF   LL-BL
LOAD Z B077B076        -0.1531       -0.1531                GLOB UNIF   LL-BL
LOAD Z B068B079        -0.1312       -0.1312                GLOB UNIF   LL-BL
LOAD Z B067B075        -0.2315       -0.2315                GLOB UNIF   LL-BL
LOAD Z B066B073        -0.2315       -0.2315                GLOB UNIF   LL-BL
```

```
LOAD Z B064B069 0.50000-0.0750       -0.0750                GLOB UNIF   LL-BL
*
*******************************************************************************
****************************MECHANICAL LOADS***********************************
*******************************************************************************
LOADCN 280
LOAD Z 40324033 1.42850-1.0249                              GLOB CONC   L-121
LOAD Z 40434044 1.42850-1.0249                              GLOB CONC   L-121
LOAD   4348                   -9.3799                       GLOB JOIN   TOTETANK
LOAD   5000                   -111.55                       GLOB JOIN   Z-121
LOAD Z 20502081 6.75000-3.9600                              GLOB CONC   V-124
LOAD Z 20512082 6.75000-3.9600                              GLOB CONC   V-124
LOAD Z 20562075        -2.66404.00000-2.6640                GLOB UNIF   V-121
LOAD Z 20524222        -2.6640       -2.6640                GLOB UNIF   V-121
LOAD   5014                   -0.9079                       GLOB JOIN   VENTB
LOAD Z 10541055 5.00000-0.5500                              GLOB CONC   P-125
LOAD Z 31103127        -0.18683.08330-0.1868                GLOB UNIF   UTILITYR
LOAD Z 31113128        -0.14673.08330-0.1467                GLOB UNIF   UTILITYR
LOAD Z 30933111 1.08330-0.1467       -0.1467                GLOB UNIF   UTILITYR
LOAD Z 30923110 1.08330-0.1868       -0.1868                GLOB UNIF   UTILITYR
LOAD Z 20202049 6.00000-0.8250                              GLOB CONC   R-121
LOAD Z 20492080 6.00000-0.8250                              GLOB CONC   R-121
LOAD Z 10251032        -1.7901       -1.7901                GLOB UNIF   T-121
LOAD Z 22212222 0.50333-1.0426       -1.0426                GLOB UNIF   U-1210
LOAD Z 10411042        -0.6063       -0.6063                GLOB UNIF   P-121
LOAD   4346                   -6.0610                       GLOB JOIN   G-1212
LOAD   4350                   -21.098                       GLOB JOIN   U-1201
LOAD   4355                   -30.590                       GLOB JOIN   U-1202
LOAD   2378                   -2.8600                       GLOB JOIN   U-1211
LOAD Z 10601066        -1.1876       -1.1876                GLOB UNIF   M-121
LOAD Z 10271300        -1.7901       -1.7901                GLOB UNIF   T-121
LOAD Z 13001034        -1.7901       -1.7901                GLOB UNIF   T-121
*
*******************************************************************************
****************************ELECTRICAL LOADS***********************************
*******************************************************************************
LOADCN 285
LOAD Z 40154016 2.00000-0.0100                              GLOB CONC   DCBD-A01
LOAD Z 41894209 7.50000-0.0100                              GLOB CONC   DCBD-A02
LOAD Z 22222223 2.00000-0.2205                              GLOB CONC   JB-BB
LOAD Z 21852213 2.00000-0.2205                              GLOB CONC   JB-BB
LOAD Z 20032212 2.00000-0.2205                              GLOB CONC   JB-BB
LOAD   4209                   -0.0450                       GLOB JOIN   DCBD-S0B
LOAD   4187                   -0.0441                       GLOB JOIN   CBSP121D
LOAD   4167                   -0.0441                       GLOB JOIN   CBSP121C
LOAD   4144                   -0.0441                       GLOB JOIN   CBSP121B
LOAD   4124                   -0.0643                       GLOB JOIN   CBSP121F
LOAD   4106                   -0.0643                       GLOB JOIN   CBSP121G
LOAD   4093                   -0.0643                       GLOB JOIN   CBSP121H
LOAD   4059                   -0.0643                       GLOB JOIN   CBSP121I
LOAD   4187                   -0.0154                       GLOB JOIN   CBSP121A
*
***LDS1**     18.500    -1.500    65.000    18.500     1.500    65.000    18.500
***LDS2**     -1.500    65.000    18.500     1.500    65.000     0.067     0.067
***LDS3**      1.000  50   1   3   0   1285   -2EQUPPRESECU-SP
LOAD Z 41244144        -0.70501.50000-0.7050                GLOB UNIF   ECU-SP
LOAD Z 41064124 6.00000-0.7050       -0.7050                GLOB UNIF   ECU-SP
LOAD Z 41254145        -0.70501.50000-0.7050                GLOB UNIF   ECU-SP
LOAD Z 41074125 6.00000-0.7050       -0.7050                GLOB UNIF   ECU-SP
*
***LDS1**     18.500    -1.500    65.000    18.500     1.500    65.000    18.500
***LDS2**     -1.500    65.000    18.500     1.500    65.000     0.040     0.040
***LDS3**      1.000  50   1   3   0   1285   -2EQUPPRESJB-BB
LOAD Z 41244144        -0.03681.50000-0.0368                GLOB UNIF   JB-BB
LOAD Z 41064124 6.00000-0.0368       -0.0368                GLOB UNIF   JB-BB
LOAD Z 41254145        -0.03681.50000-0.0368                GLOB UNIF   JB-BB
LOAD Z 41074125 6.00000-0.0368       -0.0368                GLOB UNIF   JB-BB
*
***LDS1**     18.500    -5.250    65.000    18.500    -1.750    65.000    18.500
***LDS2**     -5.250    65.000    18.500    -1.750    65.000     0.073     0.073
```

```
***LDS3**      1.000  50   1   3   0   1285   -2EQUPPRESACDB-121
LOAD Z 41064124 2.25000-0.09453.50000-0.0945                GLOB UNIF   ACDB-121
LOAD Z 41074125 2.25000-0.09453.50000-0.0945                GLOB UNIF   ACDB-121
*
***LDS1**     15.750     7.500    65.000    15.750    13.000    65.000    15.750
***LDS2**      7.500    65.000    15.750    13.000    65.000     0.050     0.050
***LDS3**      1.000  50   1   3   0   1285   -2EQUPPRESBB-121B1
LOAD Z 41434166        -0.0852       -0.0852                GLOB UNIF   BB-121B1
LOAD Z 41444167        -0.1704       -0.1704                GLOB UNIF   BB-121B1
LOAD Z 41454168        -0.0852       -0.0852                GLOB UNIF   BB-121B1
*
***LDS1**     15.750     2.000    65.000    15.750     7.500    65.000    15.750
***LDS2**      2.000    65.000    15.750     7.500    65.000     0.050     0.050
***LDS3**      1.000  50   1   3   0   1285   -2EQUPPRESBB-121B2
LOAD Z 41234143 2.00000-0.0852       -0.0852                GLOB UNIF   BB-121B2
LOAD Z 41244144 2.00000-0.1704       -0.1704                GLOB UNIF   BB-121B2
LOAD Z 41254145 2.00000-0.0852       -0.0852                GLOB UNIF   BB-121B2
*
***LDS1**     15.750    -7.500    65.000    15.750    -3.500    65.000    15.750
***LDS2**     -7.500    65.000    15.750    -3.500    65.000     0.102     0.102
***LDS3**      1.000  50   1   3   0   1285   -2EQUPPRESBC-121A
LOAD Z 41054123        -0.14064.00000-0.1406                GLOB UNIF   BC-121A
LOAD Z 41064124        -0.28124.00000-0.2812                GLOB UNIF   BC-121A
LOAD Z 41074125        -0.14064.00000-0.1406                GLOB UNIF   BC-121A
*
***LDS1**     18.500    -1.500    65.000    18.500     1.500    65.000    18.500
***LDS2**     -1.500    65.000    18.500     1.500    65.000     0.018     0.018
***LDS3**      1.000  50   1   3   0   1285   -2EQUPPRESBTB121B
LOAD Z 41244144        -0.02501.50000-0.0250                GLOB UNIF   BTB121B
LOAD Z 41064124 6.00000-0.0250       -0.0250                GLOB UNIF   BTB121B
LOAD Z 41254145        -0.02501.50000-0.0250                GLOB UNIF   BTB121B
LOAD Z 41074125 6.00000-0.0250       -0.0250                GLOB UNIF   BTB121B
*
***LDS1**     18.500    12.000    65.000    18.500    15.000    65.000    18.500
***LDS2**     12.000    65.000    18.500    15.000    65.000     0.085     0.085
***LDS3**      1.000  50   1   3   0   1285   -2EQUPPRESDCDB121A
LOAD Z 41674187        -0.07902.00000-0.0790                GLOB UNIF   DCDB121A
LOAD Z 41444167 4.50000-0.0790       -0.0790                GLOB UNIF   DCDB121A
LOAD Z 41684189        -0.07902.00000-0.0790                GLOB UNIF   DCDB121A
LOAD Z 41454168 4.50000-0.0790       -0.0790                GLOB UNIF   DCDB121A
*
***LDS1**     18.500    -7.500    65.000    18.500    -4.500    65.000    18.500
***LDS2**     -7.500    65.000    18.500    -4.500    65.000     0.051     0.051
***LDS3**      1.000  50   1   3   0   1285   -2EQUPPRESDCDB121B
LOAD Z 41064124        -0.09193.00000-0.0919                GLOB UNIF   DCDB121B
LOAD Z 41074125        -0.09193.00000-0.0919                GLOB UNIF   DCDB121B
LOAD Z 41664186 2.75000-0.0334       -0.0334                GLOB UNIF   BB-121A
LOAD Z 41674187 2.75000-0.0334       -0.0334                GLOB UNIF   BB-121A
LOAD Z 41684189 2.75000-0.0334       -0.0334                GLOB UNIF   BB-121A
LOAD Z 41884208 3.28084-1.4672                              GLOB CONC   SP121
LOAD Z 41674187 0.82021-1.4672                              GLOB CONC   SP121
LOAD Z 41244144 3.28084-1.4672                              GLOB CONC   SP121
*******************************************************************************
******************************INSTRUMENT LOADS*********************************
*******************************************************************************
LOADCN 290
LOAD   4019                    -0.0400                      GLOB JOIN   AN-121B
LOAD   3142                    -0.0200                      GLOB JOIN   IJB
LOAD   3143                    -0.0200                      GLOB JOIN   IJB
LOAD Z 21502195 5.00000-0.0200                              GLOB CONC   IJB
LOAD Z 21502195 10.0000-0.0200                              GLOB CONC   IJB
LOAD Z 20842117 5.67000-0.2691       -0.2691                GLOB UNIF   WHCP
LOAD Z 21172136        -0.2691       -0.2691                GLOB UNIF   WHCP
LOAD Z 22022209 0.74996-0.3333       -0.3333                GLOB UNIF   RTU-SCAD
LOAD Z 22092233        -0.3333       -0.3333                GLOB UNIF   RTU-SCAD
LOAD Z 21362368        -0.26912.50000-0.2691                GLOB UNIF   WHCP
*******************************************************************************
************************ CRANE OPERATING LOAD *********************************
*******************************************************************************
LOADCN 305
```

```
LOAD   5000                    -11.025                       GLOB JOIN   CRN-VMA
LOADCN 310
LOAD   5000                            6615.00               GLOB JOIN   CRN-MXN
LOADCN 315
LOAD   5000                                     6615.00      GLOB JOIN   CRN-MYN
END
 **JNCV** 0 0 0 0 0 1 1
END
```

```
CLPOPT      2  4999        CNPPLBJF  JS            2U   0.100.0010.010
500.0.002
CLPRPT P1R1M1      SMMS                25.
LDSEQ 101           1100   1          1.2004   1          1.2004 100  1.05
20.
GRPELA         MD1 MD2 MD3 MD4 MD5 MD6 MD9 MDA MDB MDC
* MAIN DECK BRACE
GRPELA         MZ1 MZ2 MZA MZB
* MEZZANINE DECK
GRPELA         CD1 CD2 CD3 CD4 CD5 CD6 CDA CDB CDC
* CELLAR DECK
GRPELA         SC1 SC2
* SUB CELLAR DECK
END
```

```
LDOPT SF      +Z   64.20  490.00   -190.  193.60GLOBEN    HYDFLDCMB   NPNP
K
     IN-PLACE ANALYSIS : PHE-12 OPERATING MAXIMUM WD
LCSEL           2001 2002 2003 2004 2005 2006 2007 2008 2009 2010 2011 2012
FILE B
*
*
MGROV
MGROV   0.000     70.000   1.000                  87.400
MGROV   70.000   170.000   2.000                  87.400
MGROV   170.00   190.000   4.000                  87.400
*
LOAD
*
********************** WIND LOAD OPR MAX WD
************************************
*
LOADCN 361
LOADLB361 OPERATING WIND 0 DEGREE MAX WD
WIND
WIND DIM   29.08 0.01666  0.0000 193.60021APAXVX
LOADCN 362
LOADLB362 OPERATING WIND 30 DEGREE MAX WD
WIND
WIND DIM   29.08 0.01666   30.00 193.60021APAXVXBY
LOADCN 363
LOADLB363 OPERATING WIND 60 DEGREE MAX WD
WIND
WIND DIM   29.08 0.01666   60.00 193.60021APAXVXBY
LOADCN 364
LOADLB364 OPERATING WIND 90 DEGREE MAX WD
WIND
WIND DIM   29.08 0.01666   90.00 193.60021APBY
LOADCN 365
LOADLB365 OPERATING WIND 120 DEGREE MAX WD
WIND
WIND DIM   29.08 0.01666  120.00 193.60021APBYCXVX
LOADCN 366
LOADLB366 OPERATING WIND 150 DEGREE MAX WD
WIND
WIND DIM   29.08 0.01666  150.00 193.60021APBYCXVX
LOADCN 367
LOADLB367 OPERATING WIND 180 DEGREE MAX WD
WIND
WIND DIM   29.08 0.01666  180.00 193.60021APCXVX
LOADCN 368
LOADLB368 OPERATING WIND 210 DEGREE MAX WD
WIND
WIND DIM   29.08 0.01666  210.00 193.60021APCXVXDY
LOADCN 369
LOADLB369 OPERATING WIND 240 DEGREE MAX WD
WIND
WIND DIM   29.00 0.01666  240.00 193.60021APCXVXDY
LOADCN 370
LOADLB370 OPERATING WIND 270 DEGREE MAX WD
WIND
WIND DIM   29.08 0.01666  270.00 193.60021APDY
LOADCN 371
LOADLB371 OPERATING WIND 300 DEGREE MAX WD
WIND
WIND DIM   29.08 0.01666  300.00 193.60021APDYAXVX
LOADCN 372
LOADLB372 OPERATING WIND 330 DEGREE MAX WD
WIND
```

```
WIND DIM   29.08 0.01666  330.00 193.60021APDYAXVX
*
*
********************** ENV. INPLACE 1 YR MAX WD
********************************
LOADCN 421
LOADLB 421WAVE&CURR 1-YR 0 DEG MAX WD
WAVE
WAVE0.95STOK 12.60193.60  5.82          0.00      D          5.0  72MM10 1 1 5
CURR
CURR        0.00   1.313  0.                 1.0        US CN FPS WDP
CURR       10.00   1.502  0
CURR       20.00   1.658  0
CURR       30.00   1.757  0
CURR       40.00   1.831  0
CURR       50.00   1.890  0
CURR       60.00   1.940  0
CURR       70.00   1.983  0
CURR       80.00   2.021  0
CURR       90.00   2.056  0
CURR      100.00   2.087  0
LOADCN 422
LOADLB 422WAVE&CURR 1-YR 30 DEG MAX WD
WAVE
WAVE0.95STOK 12.60193.60  5.82         30.00      D          5.0  72MM10 1 1 5
CURR
CURR        0.00   1.313    30.0             1.0        US CN FPS WDP
CURR       10.00   1.502    30.0
CURR       20.00   1.658    30.0
CURR       30.00   1.757    30.0
CURR       40.00   1.831    30.0
CURR       50.00   1.890    30.0
CURR       60.00   1.940    30.0
CURR       70.00   1.983    30.0
CURR       80.00   2.021    30.0
CURR       90.00   2.056    30.0
CURR      100.00   2.087    30.0
LOADCN 423
LOADLB 423WAVE&CURR 1-YR 60 DEG MAX WD
WAVE
WAVE0.95STOK 12.60193.60  5.82         60.00      D          5.0  72MM10 1 1 5
CURR
CURR        0.00   1.313    60.0             1.0        US CN FPS WDP
CURR       10.00   1.502    60.0
CURR       20.00   1.658    60.0
CURR       30.00   1.757    60.0
CURR       40.00   1.831    60.0
CURR       50.00   1.890    60.0
CURR       60.00   1.940    60.0
CURR       70.00   1.983    60.0
CURR       80.00   2.021    60.0
CURR       90.00   2.056    60.0
CURR      100.00   2.087    60.0
LOADCN 424
LOADLB 424WAVE&CURR 1-YR 90 DEG MAX WD
WAVE
WAVE0.95STOK 12.60193.60  5.82         90.00      D          5.0  72MM10 1 1 5
CURR
CURR        0.00   1.313    90.0             1.0        US CN FPS WDP
CURR       10.00   1.502    90.0
CURR       20.00   1.658    90.0
CURR       30.00   1.757    90.0
CURR       40.00   1.831    90.0
CURR       50.00   1.890    90.0
```

```
CURR       60.00   1.940    90.0
CURR       70.00   1.983    90.0
CURR       80.00   2.021    90.0
CURR       90.00   2.056    90.0
CURR      100.00   2.087    90.0
LOADCN 425
LOADLB 425WAVE&CURR 1-YR 120 DEG MAX WD
WAVE
WAVE0.95STOK 12.60193.60  5.82        120.00      D          5.0  72MM10 1 1 5
CURR
CURR        0.00   1.313   120.0             1.0        US CN FPS WDP
CURR       10.00   1.502   120.0
CURR       20.00   1.658   120.0
CURR       30.00   1.757   120.0
CURR       40.00   1.831   120.0
CURR       50.00   1.890   120.0
CURR       60.00   1.940   120.0
CURR       70.00   1.983   120.0
CURR       80.00   2.021   120.0
CURR       90.00   2.056   120.0
CURR      100.00   2.087   120.0
LOADCN 426
LOADLB 426WAVE&CURR 1-YR 150 DEG MAX WD
WAVE
WAVE0.95STOK 12.60193.60  5.82        150.00      D          5.0  72MM10 1 1 5
CURR
CURR        0.00   1.313   150.0             1.0        US CN FPS WDP
CURR       10.00   1.502   150.0
CURR       20.00   1.658   150.0
CURR       30.00   1.757   150.0
CURR       40.00   1.831   150.0
CURR       50.00   1.890   150.0
CURR       60.00   1.940   150.0
CURR       70.00   1.983   150.0
CURR       80.00   2.021   150.0
CURR       90.00   2.056   150.0
CURR      100.00   2.087   150.0
LOADCN 427
LOADLB 427WAVE&CURR 1-YR 180 DEG MAX WD
WAVE
WAVE0.95STOK 12.60193.60  5.82        180.00      D          5.0  72MM10 1 1 5
CURR
CURR        0.00   1.313   180.0             1.0        US CN FPS WDP
CURR       10.00   1.502   180.0
CURR       20.00   1.658   180.0
CURR       30.00   1.757   180.0
CURR       40.00   1.831   180.0
CURR       50.00   1.890   180.0
CURR       60.00   1.940   180.0
CURR       70.00   1.983   180.0
CURR       80.00   2.021   180.0
CURR       90.00   2.056   180.0
CURR      100.00   2.087   180.0
LOADCN 428
LOADLB 428WAVE&CURR 1-YR 210 DEG MAX WD
WAVE
WAVE0.95STOK 12.60193.60  5.82        210.00      D          5.0  72MM10 1 1 5
CURR
CURR        0.00   1.313   210.0             1.0        US CN FPS WDP
CURR       10.00   1.502   210.0
CURR       20.00   1.658   210.0
CURR       30.00   1.757   210.0
CURR       40.00   1.831   210.0
CURR       50.00   1.890   210.0
```

```
CURR       60.00   1.940   210.0
CURR       70.00   1.983   210.0
CURR       80.00   2.021   210.0
CURR       90.00   2.056   210.0
CURR      100.00   2.087   210.0
LOADCN 429
LOADLB 429WAVE&CURR 1-YR 240 DEG MAX WD
WAVE
WAVE0.95STOK 12.60193.60  5.82        240.00      D          5.0  72MM10 1 1 5
CURR
CURR        0.00   1.313   240.0             1.0        US CN FPS WDP
CURR       10.00   1.502   240.0
CURR       20.00   1.658   240.0
CURR       30.00   1.757   240.0
CURR       40.00   1.831   240.0
CURR       50.00   1.890   240.0
CURR       60.00   1.940   240.0
CURR       70.00   1.983   240.0
CURR       80.00   2.021   240.0
CURR       90.00   2.056   240.0
CURR      100.00   2.087   240.0
LOADCN 430
LOADLB 430WAVE&CURR 1-YR 270 DEG MAX WD
WAVE
WAVE0.95STOK 12.60193.60  5.82        270.00      D          5.0  72MM10 1 1 5
CURR
CURR        0.00   1.313   270.0             1.0        US CN FPS WDP
CURR       10.00   1.502   270.0
CURR       20.00   1.658   270.0
CURR       30.00   1.757   270.0
CURR       40.00   1.831   270.0
CURR       50.00   1.890   270.0
CURR       60.00   1.940   270.0
CURR       70.00   1.983   270.0
CURR       80.00   2.021   270.0
CURR       90.00   2.056   270.0
CURR      100.00   2.087   270.0
LOADCN 431
LOADLB 431WAVE&CURR 1-YR 300 DEG MAX WD
WAVE
WAVE0.95STOK 12.60193.60  5.82        300.00      D          5.0  72MM10 1 1 5
CURR
CURR        0.00   1.313   300.0             1.0        US CN FPS WDP
CURR       10.00   1.502   300.0
CURR       20.00   1.658   300.0
CURR       30.00   1.757   300.0
CURR       40.00   1.831   300.0
CURR       50.00   1.890   300.0
CURR       60.00   1.940   300.0
CURR       70.00   1.983   300.0
CURR       80.00   2.021   300.0
CURR       90.00   2.056   300.0
CURR      100.00   2.087   300.0
LOADCN 432
LOADLB 432WAVE&CURR 1-YR 330 DEG MAX WD
WAVE
WAVE0.95STOK 12.60193.60  5.82        330.00      D          5.0  72MM10 1 1 5
CURR
CURR        0.00   1.313   330.0             1.0        US CN FPS WDP
CURR       10.00   1.502   330.0
CURR       20.00   1.658   330.0
CURR       30.00   1.757   330.0
CURR       40.00   1.831   330.0
CURR       50.00   1.890   330.0
```

```
CURR       60.00   1.940   330.0
CURR       70.00   1.983   330.0
CURR       80.00   2.021   330.0
CURR       90.00   2.056   330.0
CURR      100.00   2.087   330.0
*
*************************** LCOMB OPR 1 YR MIN WD
******************************
LCOMB
************************** live load
*******************************************
LCOMB LIV   260    1. 261    1. 262    1. 265    1. 266    1.
LCOMB LIV   270    1. 271    1. 272    1. 275    1. 276    1. 277    1.
***************************LOAD
COMBINATION*************************************
LCOMB GRVT    21.1000 1051.1000 1101.1000 1151.1000 1201.1000 1251.1000
LCOMB GRVT  1301.1000 2801.1000 2851.1000 2901.1000
****************** GRAVITY+LIVE LOAD WITH CRANE VERTICAL LOAD
******************
LCOMB 1100 GRVT1.0000 LIV1.0000 3052.0000  PD    1.
*
*****************************************************************************
**
********************* OPERATING MAXIMUM WATER DEPTH
****************************
*****************************************************************************
**
LCOMB 2001 11001.0000315 2.0000          361 1.0000421 1.0000
LCOMB 2002 11001.0000315 1.7320310 -1.000362 1.0000422 1.0000
LCOMB 2003 11001.0000315 1.0000310 -1.732363 1.0000423 1.0000
LCOMB 2004 11001.0000310 -2.000          364 1.0000424 1.0000
LCOMB 2005 11001.0000315 -1.000310 -1.732365 1.0000425 1.0000
LCOMB 2006 11001.0000315 -1.732310 -1.000366 1.0000426 1.0000
LCOMB 2007 11001.0000315 -2.000          367 1.0000427 1.0000
LCOMB 2008 11001.0000315 -1.732310  1.000368 1.0000428 1.0000
LCOMB 2009 11001.0000315 -1.000310  1.732369 1.0000429 1.0000
LCOMB 2010 11001.0000310 2.0000          370 1.0000430 1.0000
LCOMB 2011 11001.0000315 1.0000310  1.732371 1.0000431 1.0000
LCOMB 2012 11001.0000315 1.7320310  1.000372 1.0000432 1.0000
END
```

BIODATA PENULIS

Fikri Imanudin, lahir di Pandeglang 1 September1995. Penulis menempuh Pendidikan sekolah dasardi SD Negerei Ciilaja 2 pada tahun 2001-2007.Kemudian melanjutkan Pendidikan di MTs Negeri Model Pandeglang 1 pada tahun 2007-2010. Penulis melanjutkan Pendidikan menengah atas di SMAN 1 Kota Serang pada tahun 2010-2013. Pada tahun 2014, penulis mengikuti SBMPTN dan melanjutkan pendidikan Strata 1 di Departemen Teknik Kelautan, Fakultas Teknologi Kelautan, Institut Teknologi Sepuluh Nopember Surabaya. Penulis pernah menjalani kerja praktek di PT. ZEE Indonesia yang bergerak di bidang EPC *Consultant* sebagai *Internship Structure Engineer* pada tahun 2017. Penulis pernah aktif di organisasi mahasiswa kampus, sebagai anggota *Ocean Underwater Robotic Club* (OURC) Teknik Kelautan pada tahun 2015-2017. Penulis juga aktif di kegiatan himpunan dan lembaga dakwah jurusan. Selain itu penulis juga pernah mengikuti lomba oil rig design competeition baik di level nasional maupun internasional. Buku Tugas Akhir yang berjudul "Analisis Keruntuhan Berbasis Keandalan pada Bangunan Lepas Pantai Tipe *Jacket* Terhadap Kemiringan Akibat *Settlement*" telah diselesaikan penulis dalam 1 semester sbagai syarat akhir kelulusan, Permasalahan yang diangkat oleh penulis mendasar kepada salah satu bidang keahian di Departemen Teknik Kelautan.