TUGAS AKHIR - 184803

ANALISIS PROSES *INITIATION* DAN *LAYDOWN* PADA PIPA SAAT INSTALASI DENGAN METODE S-LAY

MUHAMMAD ZAKI RASYADI

NRP. 04311540000123

Dosen Pembimbing :

Ir. Imam Rochani, M. Sc.

Ir. Handayanu, M. Sc., Ph.D

DEPARTEMEN TEKNIK KELAUTAN

FAKULTAS TEKNOLOGI KELAUTAN

INSTITUT TEKNOLOGI SEPULUH NOPEMBER

SURABAYA

2019

FINAL PROJECT - 184803

INITIATION AND LAYDOWN ANALYSIS IN SUBSEA PIPELINE DURING INSTALLATION USING S-LAY METHOD

MUHAMMAD ZAKI RASYADI

NRP. 04311540000123

Supervisors :

Ir. Imam Rochani, M. Sc.

Ir. Handayanu, M. Sc., Ph.D

DEPARTMENT OF OCEAN ENGINEERING

FACULTY OF MARINE ENGINEERING

SEPULUH NOPEMBER INSTITUTE OF TECHNOLOGY

SURABAYA

2019

LEMBAR PENGESAHAN

ANALISIS PROSES *INITIATION* DAN *LAYDOWN* PADA PIPA SAAT INSTALASI DENGAN METODE S-LAY

TUGAS AKHIR

Diajukan untuk memenuhi salah satu syarat memperoleh gelar Sarjana Teknik (S.T) pada Program Studi S-1 Departemen Teknik Kelautan Fakultas Teknologi Kelautan Institut Teknologi Sepuluh Nopember Surabaya

Oleh :

MUHAMMAD ZAKI RASYADI 04311540000123

Disetujui Oleh :

1. Ir. Imam Rochani, M.Sc (Pembimbing 1)

.....

2. Ir. Handayanu, M. Sc., Ph.D (Pembimbing 2)

.....

3. Nur Syahroni, S.T, M.T, Ph.D. (Penguji 1)

.....

4. Dr. Yeyes Mulyadi, S.T, M.Sc. (Penguji 2)

.....

SURABAYA, 18 MARET 2019

ANALISIS PROSES *INITIATION* DAN *LAYDOWN* PADA PIPA SAAT INSTALASI DENGAN METODE S-LAY

ABSTRAK

Semakin meningkatnya permintaan minyak dan gas di dunia mendorong perusahaan-perusahaan untuk meningkatkan produksinya. *Pipeline* adalah salah satu cara untuk mengefektifkan proses produksi minyak dan gas. Sebelum *pipeline* dapat digunakan terlebih dahulu dilakukan tahap desain dan instalasi untuk memastikan pipeline sesuai dengan kondisi lingkungan ditempat yang dituju. Diantaranya tahap desain memperhitungkan nilai *stress* dan *strain* yang terjadi saat instalasi pipa demi menghindari nilai *stress* dan *strain* yang melebihi nilai yang ditentukan oleh standar. Salah satu kondisi yang harus diperhitungkan adalah ketika pipeline akan diluncurkan pertama kali atau biasa disebut *Initiation* dan juga ketika pipeline akan ditinggalkan atau biasa disebut *Laydown*. Dari kedua kondisi tersebut, penulis akan menganalisa nilai *stress* dan *strain* pada *pipeline* yang akan diinstalasi di BG – BC *platform* milik PHE ONWJ dengan variasi *tension* yang digunakan berdasarkan berat properti yang terendam. Untuk proses *Initiation* diperhitungkan dengan menggunakan 21 design case yang ditentukan oleh *tension* yang akan digunakan. Sedangkan untuk kondisi *laydown* dihitung dengan mengggunakan 22 design case yang ditentukan juga oleh *tension* yang akan digunakan. Hasil analisis menunjukkan bahwa besaran *strain* dan *stress* tidak melebihi kriteria yang ditetapkan oleh DNV OS F101 dengan nilai *strain* maksimum untuk tahap *initiation* pada analisis statis sebesar 0,1977%, nilai *stress* terbesar pada ujung *stinger* sebesar 58,9% dari SMYS pipa, dan nilai *stress* terbesar pada daerah *sagbend* sebesar 38,69% dari SMYS pipa. Sedangkan pada tahap *laydown* nilai regangan terbesar sebesar 0,1855%, nilai tegangan terbesar pada ujung *stinger* sebesar 43,48 % dari SMYS pipa, dan tegangan terbesar pada daerah *sagbend* besaran mencapai 70,85 % dari SMYS pipa.

Kata Kunci : instalasi pipa, *initiation, laydown, stress, strain, tension.*

INITIATION AND LAYDOWN ANALYSIS IN SUBSEA PIPELINE DURING INSTALLATION USING S-LAY METHOD

ABSTRACT

Increasing demand for oil and gas in the world is encouraging companies to increase production. Pipeline is one of the solution to transport oil and gas on production process. Before the pipeline can be used, the design and installation stages must be carried out first to ensure the pipeline is in accordance with the environmental conditions in the site place. Among them, the design stage calculate the value of stress and strain that occurs during pipe installation in order to avoid stress values and strains that exceed values determined by the standard. One condition that must be taken into account is when the pipeline will be launched first or commonly called the Initiation and also when the pipeline will be abandoned or commonly called Laydown. From these two conditions, the author will analyze the value of stress and strains in the pipeline that will be installed on the BG-BC platform owned by PHE ONWJ with variations in the tension used based on the weight of the submerged property. The Initiation process is calculated using 21 design cases that are determined by the tension that will be used. While for the laydown condition calculated by using 22 design cases which are also determined by the tension that will be used. The analysis shows that the strain and stress magnitude does not exceed the criteria set by DNV OS F101 with the maximum strain value for the initiation stage in static analysis of 0.1977%, the greatest stress value at the stinger tip of 58.9% from the pipe SMYS, and the value the biggest stress in the sagbend area is 38.69% from the pipe SMYS. Whereas in the laydown stage the largest strain value is 0.1855%, the largest stress value at the stinger tip is 43.48% of the pipe SMYS, and the largest stress in the sagbend area is 70.85% of the pipe SMYS.

Keywords – *pipeline installation, initiation, laydown, stress, strain, tension.*

KATA PENGANTAR

Assalamualaikum Wr. Wb.

Puji dan syukur penulis panjatkan atas kehadirat Allah SWT, yang telah melimpahkan rahmat dan karunianya sehingga penulis dapat menyelesaikan Tugas Akhir dengan judul **"Analisis Proses Initiation dan Laydown Pada Pipa Saat Instalasi dengan Metode S-lay"** guna memenuhi salah satu syarat kelulusan dalam menyelesaikan program pendidikan Strata-1 (S-1) di Departemen Teknik Kelautan, Fakultas Teknologi Kelautan, Institut Teknologi Sepuluh Nopermber, Surabaya.

Utamanya, dalam memenuhi peran sebagai mahasiswa Teknik Kelautan ITS penulis dituntut untuk memanfaatkan ilmu yang sudah didapat baik kepada masyarakat maupun untuk diri sendiri. Tugas Akhir ini disadari masih memiliki banyak kekurangan baik dalam penulisan maupun materi yang disampaikan. Oleh karena itu, saran dan kritik sangat diharapkan untuk perbaikan penelitian yang akan datang. Penulis berharap Tugas Akhir ini akan bermanfaat bagi mahasiswa lain terutama yang tertarik pada instalasi pipa bawah laut.

Surabaya, Maret 2019

Penulis

UCAPAN TERIMA KASIH

Tidak lupa penulis mengucapkan terima kasih kepada beberapa pihak yang telah membantu penulis dalam menyelesaikan Tugas Akhir baik secara langsung maupun tidak langsung, antara lain:

1. Allah SWT atas segala kasih sayang serta kemudahan yang telah diberikan kepada penulis sehingga penulis dapat menyelesaikan Tugas Akhir dengan lancar.
2. Orang tua dan keluarga penulis yang selalu memberi do'a dan dukungan baik secara moral maupun materi kepada penulis dalam pengerjaan Tugas Akhir ini.
3. Bapak Ir. Imam Rochani, M.Sc. dan Bapak Ir. Handayanu, M.Sc. Ph.D. atas segala bimbingan dan ilmu yang telah diberikan kepada penulis selama mengerjakan Tugas Akhir ini serta seluruh dosen Departemen Teknik Kelautan atas ilmu yang telah diberikan selama penulis menuntut ilmu di Institut Teknologi Sepuluh Nopember.
4. Rekan-rekan Teknik Kelautan Angkatan 2015 Tritonous serta senior angkatan 2013-2014 atas bantuan dan dukungannya yang telah diberikan kepada penulis selama pengerjaan Tugas Akhir ini.
5. Bapak Dwi, Bapak Dicky Adryan, dan Bapak Randu selaku Pembimbing Lapangan yang telah memberikan ilmu dan bimbingannya kepada penulis selama penulis melakukan Kerja Praktik di PT KHI Pipe Industries sehingga ilmu yang telah diberikan dapat berguna bagi penulis selama mengerjakan Tugas Akhir ini.

Surabaya, Maret 2019

Penulis

DAFTAR ISI

DAFTAR ISI ..... **vi**
DAFTAR GAMBAR ..... **viii**
DAFTAR TABEL ..... **x**
DAFTAR LAMPIRAN ..... **xi**
BAB 1 PENDAHULUAN **1**
1.1. Latar Belakang Masalah 1
1.2. Rumusan Masalah 2
1.3. Tujuan 3
1.4. Manfaat 3
1.5. Batasan Masalah 3
BAB 2 TINJAUAN PUSTAKA DAN DASAR TEORI **5**
2.1. Tinjauan Pustaka 5
2.2. Dasar Teori 7
2.2.1. *Pipe Laying Barge* 7
2.2.2. Metode Instalasi S-Lay 7
2.2.3. Teori Gerakan Bangunan Apung 9
2.2.4. Response Amplitude Operator (RAO) 10
2.2.5. Spektrum Gelombang 10
2.2.6. Analisis Spektra Respon 11
2.2.7. *Initiation* 13
2.2.8. *Laydown* 14
2.2.9. *Overbend* 15
2.2.10. *Sagbend* 15
2.2.11. *Allowable Stress Criteria* 17
2.2.12. Allowable Strain Criteria 20
2.2.13. Perhitungan berat pipa yang terendam 20
2.2.14. Analisa perhitungan *tension* yang dibutuhkan 24
2.2.15. *Weather Restricted Operation* 26
2.2.17. Analisa menggunakan *software* 28
BAB 3 METODOLOGI PENELITIAN **33**
3.1. Metodologi Penelitian 33

3.2. Penjelasan Diagram Alir 36
BAB 4 ANALISIS DAN PEMBAHASAN 39
4.1. Pengumpulan dan Identifikasi Data 39
4.1.1. Data Properti Pipa 40
4.1.2. Data Properti *Coating* 41
4.1.3. Data *Laybarge* DLB 01 42
4.1.4. Data Properti *Stinger* dan *Roller* pada *Stinger* 42
4.1.5. Data Lingkungan 43
4.2. Analisis Respon Gerakan *Barge* 44
4.2.1. Pemodelan *Barge* 45
4.2.2. Validasi Model *Laybarge* 46
4.2.3. Analisis Response Amplitude Operator *Laybarge* 47
4.2.4. Analisis respon gerakan *barge* terhadap gelombang acak 53
4.3. Perhitungan properti berat pipa 60
4.4. Analisis besaran *tension* yang digunakan berdasarkan berat pipa terendam 61
4.5. Analisis Statis Tahap *Initiation* dan *Laydown* Pada Pipa Saat Instalasi. 67
4.6. Analisa Dinamis Tahap *Initiation* dan *Laydown* Pada Pipa Saat Instalasi 80
4.6.1. Analisis dinamis tahap *initiation* 81
4.6.2. Analisis dinamis tahap *Laydown* 86
4.7. Perhitungan Properti *Shackle* dan *Sling* 92
4.7.1. Perhitungan Properti sling 92
4.7.2. Perhitungan Properti Shackle 95
BAB 5 PENUTUP 99
5.1. Kesimpulan 99
5.2. Saran 101
DAFTAR PUSTAKA 103

DAFTAR GAMBAR

Gambar 1.1. Layout Pemasangan Pipa dari BG menuju BC Platform 2
Gambar 2.1. *Pipe Laying Barge* dengan tipe *S-Lay Ships* (Bai dan Bai, 2014).... 7
Gambar 2.2. Penggambaran metode instalasi S-lay (Liang et al, 2018) 8
Gambar 2.3. Diagram 6 derajat kebebasan dari suatu kapal (Sandaruwan et al, 2010) 10
Gambar 2.4. Ilustrasi tahapan *Initiation* pada proses instalasi pipa 14
Gambar 2.5. Ilustrasi tahapan Laydown pada proses instalasi pipa (paling kiri) 14
Gambar 2.6. Model *Catenary* (Bai dan Bai, 2014) 16
Gambar 2.7. *Hoop Stress* pada pipa (Bai dan Bai, 2014)..... 18
Gambar 2.8. Faktor yang memengaruhi *Longitudinal Stress* pada pipa (Bai dan Bai, 2014)..... 19
Gambar 2.9. Bagian lapisan-lapisan yang melindungi pipa (Fauzanullah, 2017)21
Gambar 2.10. Konfigurasi gaya pada instalasi pipa 24
Gambar 2.11. Ilustrasi Radius *Stinger* Pipa..... 25
Gambar 2.12. Model Elemen Hingga dari sistem *pipelaying* (OFFPIPE, 2013) 30
Gambar 2.13. Contoh permodelan struktur sederhana di MOSES (MOSES, 2013) 31
Gambar 3.1. Diagram Alir Pengerjaan Tugas Akhir 33
Gambar 4.1. Layout *Pipeline Replacement* pada *platform* BG-BC 39
Gambar 4.2. Model *Laybarge* Tampak Isometri 45
Gambar 4.3. Model *Laybarge* Tampak *Starboard* 45
Gambar 4.4. Model *Laybarge* Tampak Atas 46
Gambar 4.5. Model *Laybarge* Tampak Depan 46
Gambar 4.6. Grafik RAO Gerakan *Surge*..... 48
Gambar 4.7. Grafik RAO Gerakan *Sway* 49
Gambar 4.8. Grafik RAO untuk Gerakan *Heave*..... 50
Gambar 4.9. Grafik RAO untuk Gerakan *Roll* 51
Gambar 4.10. Grafik RAO untuk Gerakan *Pitch* 52
Gambar 4.11. Grafik RAO untuk Gerakan *Yaw*..... 53
Gambar 4.12. Grafik Spektrum JONSWAP untuk arah 0 53
Gambar 4.13. Grafik Spektrum JONSWAP untuk arah 45° 54
Gambar 4.14. Grafik Spektrum JONSWAP untuk arah 90° 54
Gambar 4.15. Grafik Spektrum JONSWAP untuk arah 135° 54
Gambar 4.16. Grafik Spektrum JONSWAP untuk arah 180° 55
Gambar 4.17. Ilustrasi *Step* 1 Pada Proses *Initiation* 69
Gambar 4.18. Ilustrasi *Step* 2 Pada Proses *Initiation* 70
Gambar 4.19. Ilustrasi *Step* 3 Pada Proses *Initiation* 70
Gambar 4.20. Ilustrasi *Step* 4 Pada Proses *Initiation* 70
Gambar 4.21. Ilustrasi *Step* 5 Pada Proses *Initiation* 71
Gambar 4.22. Ilustrasi *Step* 6 Pada Proses *Initiation* 71
Gambar 4.23. Ilustrasi *Step* 7 Pada Proses *Initiation* 71
Gambar 4.24. Ilustrasi *Step* 8 Pada Proses *Initiation* 71
Gambar 4.25. Ilustrasi *Step* 9 Pada Proses *Initiation* 72
Gambar 4.26. Ilustrasi *Step* 10 Pada Proses *Initiation* 72

Gambar 4.27. Ilustrasi *Step* 11 Pada Proses *Initiation* 72
Gambar 4.28. Ilustrasi *Step* 12 Pada Proses *Initiation* 72
Gambar 4.29. Ilustrasi *Step* 1 Pada Proses *Laydown*..... 73
Gambar 4.30. Ilustrasi *Step* 2 Pada Proses *Laydown*..... 73
Gambar 4.31. Ilustrasi *Step* 3 Pada Proses *Laydown*..... 74
Gambar 4.32. Ilustrasi *Step* 4 Pada Proses *Laydown*..... 74
Gambar 4.33. Ilustrasi *Step* 5 Pada Proses *Laydown*..... 74
Gambar 4.34. Ilustrasi *Step* 6 Pada Proses *Laydown*..... 75
Gambar 4.35. Ilustrasi *Step* 7 Pada Proses *Laydown*..... 75
Gambar 4.36. Ilustrasi *Step* 8 Pada Proses *Laydown*..... 75
Gambar 4.37. Ilustrasi *Step* 9 Pada Proses *Laydown*..... 76
Gambar 4.38. Ilustrasi *Step* 10 Pada Proses *Laydown*..... 76
Gambar 4.39. Ilustrasi *Step* 11 Pada Proses *Laydown*..... 76
Gambar 4.40. Ilustrasi *Step* 12 Pada Proses *Laydown*..... 77
Gambar 4.41. Ilustrasi *Step* 13 Pada Proses *Laydown*..... 77
Gambar 4.42. Perbedaan arah pembebanan pada MOSES dan OFFPIPE 80
Gambar 4.43. Grafik Distribusi Tegangan Pada Tahap *Initiation* dengan Variasi Tension Pada Arah Pembebanan 0° 81
Gambar 4.44. Grafik Distribusi Tegangan Pada Tahap *Initiation* dengan Variasi *Tension* Pada Arah Pembebanan 45° 82
Gambar 4.45. Grafik Distribusi Tegangan Pada Tahap Initiation dengan Variasi Tension Pada Arah Pembebanan 90° 83
Gambar 4.46. Grafik Distribusi Tegangan Pada Tahap Initiation dengan Variasi Tension Pada Arah Pembebanan 135° 84
Gambar 4.47. Grafik Distribusi Tegangan Pada Tahap *Initiation* dengan Variasi Tension Pada Arah Pembebanan 180° 85
Gambar 4.48. Grafik Distribusi Tegangan Pada Tahap *Laydown* dengan Variasi Tension Pada Arah Pembebanan 0° 87
Gambar 4.49. Grafik Distribusi Tegangan Pada Tahap *Laydown* dengan Variasi Tension Pada Arah Pembebanan 45° 88
Gambar 4.50. Grafik Distribusi Tegangan Pada Tahap *Laydown* dengan Variasi *Tension* Pada Arah Pembebanan 90° 89
Gambar 4.51. Grafik Distribusi Tegangan Pada Tahap *Laydown* dengan Variasi *Tension* Pada Arah Pembebanan 135° 90
Gambar 4.52. Grafik Distribusi Tegangan Pada Tahap *Laydown* dengan Variasi *Tension* Pada Arah Pembebanan 180° 91

DAFTAR TABEL

Tabel 2.1. Perbandingan dari tiga metode instalasi pipa 5
Tabel 2.2. *Simplified Laying Criteria* DNV OS F101..... 20
Tabel 2.3. Faktor *End Termination* Berdasarkan Jenis Cover Sling 28
Tabel 4.1. Data Properti Pipa 40
Tabel 4.2. Data Lapisan Anti Korosi..... 41
Table 4.3. Data Properti *Concrete Weight Coating*..... 41
Tabel 4.4. Data Properti *Laybarge* DLB 01 42
Tabel 4.5. Data Properti *Stinger*..... 42
Tabel 4.6. Data Letak *Roller* pada *Stinger* 43
Tabel 4.7. Data Letak *Roller* dan *Tension*..... 43
Tabel 4.8. Data Kedalaman Laut di *Platform* BG-BC 43
Tabel 4.9. Data Gelombang dan Arus 44
Tabel 4.10. Data Tanah 44
Tabel 4.11. Validasi Model *Laybarge*..... 47
Tabel 4.12. Perhitungan spektra respon *surge* untuk arah pembebanan 0°..... 56
Tabel 4.13. Amplitudo respon gerakan *laybarge* untuk arah 0° 57
Tabel 4.14. Amplitudo respon gerakan *laybarge* untuk arah 45° 57
Tabel 4.15. Amplitudo respon gerakan *laybarge* untuk arah 90° 57
Tabel 4.16. Amplitudo respon gerakan *laybarge* untuk arah 135° 57
Tabel 4.17. Amplitudo respon gerakan *laybarge* untuk arah 180° 58
Tabel 4.18. Hasil Perhitungan *Zero Up Crossing Period* 59
Tabel 4.19. Hasil Perhitungan besaran *tension* yang dibutuhkan untuk tahap *initiation*..... 64
Tabel 4.20. Hasil Perhitungan Besaran *Tension* yang Dibutuhkan Untuk Tahap *Laydown*..... 67
Tabel 4.21. *Design Case* untuk Tahap *Initiation*..... 68
Tabel 4.22. *Design Case* untuk Tahap *Laydown*..... 69
Tabel 4.23. Hasil Perhitungan Analisis Proses *Initiation* Pada Saat Instalasi..... 78
Tabel 4.24. Hasil Analisis Tahap *Laydown* Pada Saat Instalasi..... 79
Tabel 4.25. Besaran Regangan Maksimum yang Terjadi Pada Tahap *Initiation*. 86
Tabel 4.26. Besaran Regangan Maksimum yang Terjadi Pada Tahap *Laydown*. 92

DAFTAR LAMPIRAN

LAMPIRAN A	HASIL OUTPUT SOFTWARE MOSES (HYDROSTATIC PROPERTIES)
LAMPIRAN B	HASIL OUTPUT SOFTWARE MOSES (RAO)
LAMPIRAN C	HASIL OUTPUT SOFTWARE OFFPIPE (ANALISIS STATIS)
LAMPIRAN D	HASIL OUTPUT SOFTWARE OFFPIPE (ANALISIS DINAMIS)

BAB 1 PENDAHULUAN

1.1. Latar Belakang Masalah

Banyaknya kebutuhan masyarakat terhadap bahan bakar minyak (BBM) menyebabkan naiknya permintaan BBM. Oleh sebab itu, untuk mengatasi adanya krisis minyak perusahaan mencari solusi untuk mengeksplorasi dan mengekploitasi minyak, sedikit demi sedikit dan bahkan sudah berkembang untuk mengolah sumber kekayaan lain yaitu gas alam (Soegiono, 2004). Perlu diketahui juga bahwa Indonesia termasuk salah satu penghasil gas bumi terbesar di dunia. Diperkirakan jumlah cadangan gas bumi di Indonesia ini sekitar 176 trilyun kaki kubik (TCF). Dengan cadangan gas bumi tersebut dapat dimanfaatkan kurang lebih dalam kurun waktu 30 tahun.

Sebelum dapat digunakan sebagai alat transportasi migas, *pipeline* harus melewati beberapa tahap perencanaan. Banyak faktor perencanaan yang harus diperhitungkan dalam proses instalasi *pipeline.* Seperti menentukan metode yang akan digunakan dalam menginstalasi pipa bawah laut. Kriteria desain dari material pipeline juga harus dipertimbangkan agar saat *pipeline* diinstalasi tidak terjadi kegagalan. Pada proses instalasi *pipeline* juga harus diperhatikan distribusi tegangan dan regangan agar dapat mengidentifikasi tingkat stres di dua bidang utama. Yang pertama adalah pada stinger dimana pipa dapat mengalami tingkat kelenturan yang tinggi, terutama pada daerah ujung stinger. Karena kelengkungan sekarang dapat dikendalikan, kode pipa umumnya memungkinkan faktor keamanan kecil. Area yang memiliki tingkat tegangan tertinggi kedua berada di *sagbend* di mana pipa mengalami *bending* dikarenakan beratnya sendiri (Yong Bai, 2010).

Selain itu dalam metode S-lay, *pipeline* yang akan diinstalasi pertama-tama disambung antara 1 pipa dengan pipa lainnya, kemudian area penyambungan tadi diberi perlindungan berupa *field joint coating*. Semua proses tadi dilakukan pada area perakitan yang berada di dalam *laybarge* (Gong, 2016). Pipa yang sudah tersambung kemudian dipasang pada ujungnya berupa *padeye* yang berguna menyambungkan pipa dengan *cable wire* yang sudah tersambung oleh *dead man anchor* yang sudah berada di dasar laut sebelumnya. Tahap

initiation akan dimulai ketika *padeye* dan *cablewire* sudah tersambung pada pipa dan berakhir ketika sudah ada 2 sambungan pipa yang berada diatas *seabed*. Sedangkan tahap *laydown* diawali ketika *padeye* disambung pada ujung pipa terakhir, kemudian *cablewire* diikatkan pada *padeye* dan diakhiri ketika sambungan pipa terakhir sudah berada sepenuhnya diatas *seabed*.

Dalam proses instalasi pipa bawah laut, perlu dipertimbangkan kegagalan yang mungkin terjadi pada setiap tahap perencanaan, salah satunya pada saat tahap *initiation* dan *laydown*. Pada kondisi tersebut, pipa bawah laut banyak dipengaruhi oleh tegangan dan regangan baik akibat beban pipa itu sendiri. Maka, diperlukan analisa untuk menentukan besaran tegangan dan regangan yang terjadi pada pipa pada saat tahap *initiation* dan *laydown* agar pada saat melakukan instalasi *pipeline* tidak terjadi kegagalan.

Oleh sebab itu, pada tugas akhir ini penulis akan menganalisis proses *initiation* dan *laydown* pada proyek *Pipeline Replacement* yang akan dipasang di area BG hingga BC platform (Gambar 1.1) dimana akan dihitung besaran tegangan dan regangan yang terjadi baik proses *initiation* maupun *laydown* yang kemudian akan ditentukan apakah besaran tersebut memenuhi kriteria yang ditetapkan oleh DNV OS F101.

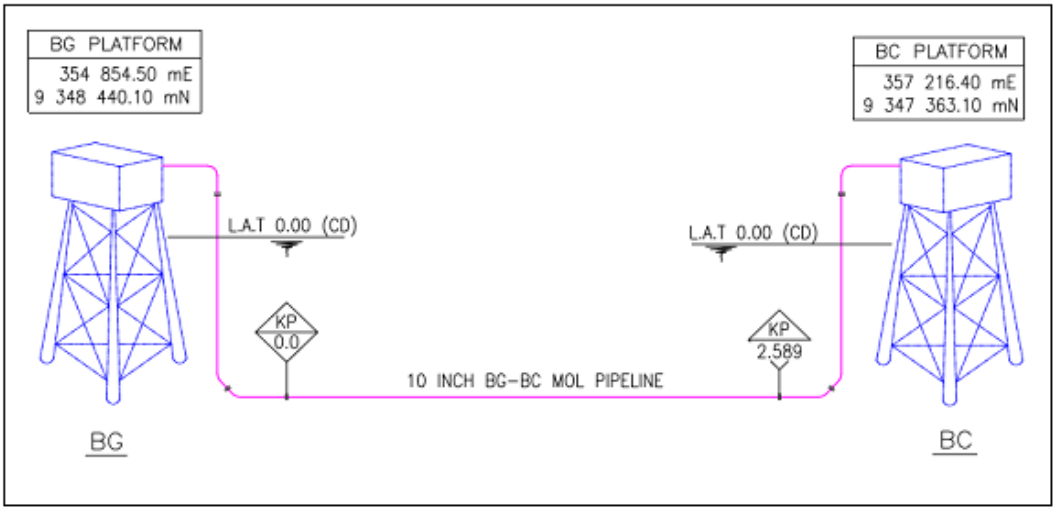

Gambar 1.1. Layout Pemasangan Pipa dari BG menuju BC Platform

1.2. Rumusan Masalah

Permasalahan yang akan dibahas dalam Tugas Akhir ini adalah:

1. Bagaimana pengaruh respon gerakan barge akibat gelombang acak?
2. Bagaimana distribusi regangan dan tegangan yang terjadi pada tahap *Initiation* ketika pipa akan diinstalasi?
3. Bagaimana distribusi regangan dan tegangan yang terjadi pada tahap *Laydown* ketika pipa akan diinstalasi

1.3. Tujuan

Berikut adalah tujuan penulis dalam menyusun Tugas Akhir ini,

1. Mengetahui besaran tension yang akan digunakan pada tiap daerah (saat pipa berada di *Laybarge, Stinger, Sagbend, dan Seabed*) berdasarkan respon gerakan *barge* akibat gelombang.
2. Menganalisa besarnya regangan dan tegangan pada tahap *Initiation* selama proses instalasi.
3. Menganalisa besarnya regangan dan tegangan pada tahap *Laydown* selama proses instalasi.

1.4. Manfaat

Penulis berharap hasil analisa dari tugas akhir dapat dijadikan sebagai referensi dalam melakukan analisa instalasi *pipeline*, khususnya pada tahap *Initiation* dan *Laydown* pada *pipeline* selama proses instalasi.

1.5. Batasan Masalah

Adapun penulis menyusun beberapa batasan masalah agar dalam penyusunan tugas akhir ini tidak terlampau jauh dari tema yang sedang dibahas, yaitu

1. Data yang digunakan adalah data *pipeline* 10” OD milik PT PHE ONWJ yang akan diinstalasi dari platform BG menuju platfom BC
2. Analisis yang dilakukan adalah analisis statis
3. Metode instalasi yang akan dianalisis adalah metode S-Lay
4. *Radius curvature* konstan

5. Pembebanan gelombang dilakukan dari arah 0°, 45°, 90°, 135°, dan 180° terhadap *barge*
6. Tinggi gelombang signifikan yang digunakan sebesar 0,7 m untuk arah pembebanan gelombang 0°, 45°,135°, dan 180° dan 0,8 m untuk arah pembebanan gelombang 90°
7. Perhitungan tegangan yang terjadi pada *pipeline* menggunakan software OFFPIPE.

BAB 2 TINJAUAN PUSTAKA DAN DASAR TEORI

2.1. Tinjauan Pustaka

Perkembangan teknologi dalam beberapa dekade kebelakang meningkatkan kebutuhan masyarakat akan energi, baik itu diperlukan untuk memenuhi kebutuhan industrinya ataupun untuk kebutuhan transportasi mereka. Migas menjadi komoditas utama yang paling banyak dibutuhkan oleh masyarakat, dikarenakan migas mudah didapat tanpa harus membutuhkan teknologi yang canggih. Oleh karena itu, agar kebutuhan akan bahan bakar masyarakat terpenuhi diperlukan sistem transportasi migas, salah satunya adalah *pipeline*. *Pipeline* tidak diragukan lagi dianggap sebagai sarana yang paling layak dan efisien untuk mengangkut minyak mentah dan gas alam dalam skala besar dari lokasi pengeboran lepas pantai ke fasilitas pengolahan yang berada di darat (Gong dan Xu, 2016). Untuk itu, diperlukan metode-metode instalasi pipa bawah laut agar pipa dapat diletakkan diatas *seabed*. Metode yang banyak digunakan dalam proses instalasi pipa adalah metode S-lay dan J-lay. Di Indonesia sendiri, instalasi pipa di bawah laut banyak menggunakan metode S-lay dikarenakan perairan Indonesia yang cenderung tidak terlalu dalam dan dalam operasinya dapat melakukan proses instalasi yang lebih cepat dibandingkan metode J-Lay seperti yang ditunjukkan pada Tabel 2.1.

Tabel 2.1. Perbandingan dari tiga metode instalasi pipa

	S-lay	J-lay	Reel Laying
Allowable water depth	0–1800 m	500–3000 m	500–3000 m
Tensioners	Required	Not necessary	Required
Auxiliary device	Stinger	J-lay tower	Drum
No. of welding stations	3–4	1	0
Laying speed	3–5 km per day	1–1.5 km per day	12–24 km per day
Advantages	Well-developed technology, applicable for both Deep and shallow water; fast laying speed; parallel welding station, high laying efficiency	Relatively well-developed technology, especially applicable for the operation in deep water; small tension; no need of stern stinger	Most welding jobs done on land; small tension, easy to control; high laying efficiency; low cost; continuously laying of whole pipeline; low risk
Disadvantages	Stinger and tensioner are needed; big challenge for deepwater mechanic properties ensurance; laying vessel requires high power performance	Only one welding station, low laying speed and efficiency; mainly applicable for deep water; high requirement for vertical stability of laying vessels	Incapable of laying pipes with concrete coating; limited pipe laying diameters; need on land prefabricate sites; high requirement of plasticity of steel

Sebagai seorang insinyur kita dituntut untuk memprediksi dan menganalisa setiap kondisi-kondisi kritis dan mengontrol kondisi tersebut agar struktur tersebut tidak mengalami kegagalan. Sebelum pipa dapat dioperasikan, pipa terlebih dahulu harus diletakkan di atas *seabed* dalam keadaan yang stabil. Ada beberapa tahapan *laying* pipa agar pipa dapat beroperasi dibawah laut, yang pertama kondisi *initiation*, yaitu ketika pipa pertama disambung terus hingga 2 sambungan pipa telah berada diatas *seabed*. Seterusnya adalah tahapan *normal lay* hingga *laydown wire* dihubungkan ke sambungan pipa terakhir. Terakhir, pipa akan sepenuhnya diletakkan pada *seabed* melalui tahapan *laydown* yang dimulai saat *laydown wire* mulai dihubungkan ke sambungan pipa terakhir hingga pipa sepenuhnya berada diatas seabed. Dalam proses instalasi *pipeline* bawah laut dibagi menjadi dua bagian kritis: bagian overbend yang diakibatkan oleh pengaruh sudut stinger, dan bagian sagbend yang terpengaruh oleh berat terendam pipa (Liang *et al*, 2018).

Febrianti (2017) telah melakukan penelitian terhadap *local buckling* pada pipa 20 inch yang terjadi saat instalasi pada kondisi *normal lay* dengan analisis beban statis dan dinamis, khususnya yang terjadi pada daerah *overbend* dan *sagbend*. Peneliti juga melakukan analisis dengan menggunakan besaran tension yang sudah ditentukan sendiri dari mulai 50 kN, 100 kN, 150 kN, dan 200 kN. Namun perlu adanya analisa besaran *tension* yang dibutuhkan berdasarkan gerakan *barge* agar besaran tension yang digunakan sesuai dengan porsi yang dibutuhkan saat proses instalasi.

Panambang (2007) telah melakukan penelitian terhadap tegangan pipa berdasarkan gerakan *barge*. Dalam penelitiannya, peneliti telah melakukan perhitungan besaran *tension* yang dibutuhkan berdasarkan gerakan *barge* dan menyimpulkan bahwa besaran *tension* yang digunakan bergantung pada berat pipa yang tercelup saat instalasi. Namun, besaran *tension* yang digunakan dapat dikurangi apabila nilai tegangan bending yang terjadi di daerah *sagbend* terlalu besar. Penulis menggunakan perhitungan yang dilakukan Panambang untuk menganalisa besaran *tension* yang dibutuhkan berdasarkan gerakan *barge*.

Berdasarkan penelitian-penelitian tersebut penulis mengajukan penelitian mengenai instalasi pipa dengan menganalisis distribusi tegangan dan regangan pada kondisi *initiation* dan *laydown* yang terjadi pada *pipeline* dengan variasi *tension* yang digunakan berdasarkan *pipe joint* yang ditambahkan.

2.2. Dasar Teori

2.2.1. *Pipe Laying Barge*

Proses instalasi pipa dibawah laut memerlukan suatu alat yang dapat mengantarkan serta menyambung satu pipa menjadi satu sistem perpipaan yang kemudian akan diletakkan diatas seabed. Oleh karena itu, dikembangkanlah kapal yang memiliki fungsi di mana pengelasan, inspeksi, dan pelapisan pipa berlangsung di sejumlah *workstation* yang berbeda (Bai dan Bai, 2014). Kapal tersebut akhirnya dikenal dengan sebutan *pipe laying barge*. Ada beberapa tipe *pipe laying barge* yang biasa digunakan dalam instalasi *underwater pipeline*, *S-lay and J-lay semisubmersible*, *S-lay and J-lay ships*, *Reeling ships*, *towing and pulling vessel*. Dalam studi kasus yang penulis analisa, mereka menggunakan tipe *S-lay and J-lay ships* dalam menginstalasi pipa bawah laut. Tipe ini memiliki keuntungan dibandingkan tipe lainnya, yaitu: 1) relatif lebih kecil 2) dapat beroperasi secara dinamis tanpa bantuan kapal penahan jangkar (Bai dan Bai, 2014) seperti pada Gambar 2.1 dibawah ini,

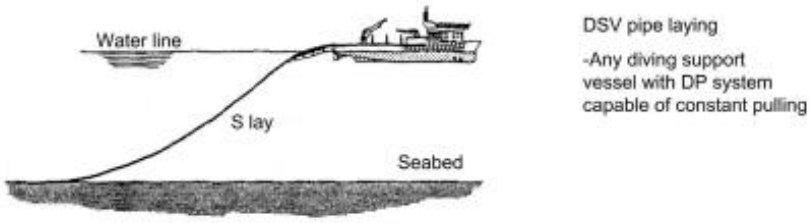

Gambar 2.1. *Pipe Laying Barge* dengan tipe *S-Lay Ships* (Bai dan Bai, 2014)

2.2.2. Metode Instalasi S-Lay

Sejak awal proses pengeboran minyak lepas pantai dimulai pada sekitar akhir abad ke-19, sejak saat itu pula para insinyur mempertimbangkan proses transportasi minyak mentah dari *field* ke *storage*. Salah satu yang paling efektif

adalah *pipeline*, karena *pipeline* tidak terpengaruh oleh cuaca ketika proses transportasi berlangsung. Kemudian dikembangkanlah metode instalasi pipa bawah laut dengan metode S-lay. Dalam metode instalasi S-lay, pipa dilas bersama-sama di atas *lay barge*, lalu diletakkan di atas *lay ramp* dan *stinger* ke dasar laut. Pipa ini didukung oleh banyak rol dari kotak rol stinger, dan dibengkokkan untuk membentuk bentuk "S", seperti yang ditunjukkan pada gambar 2.2 (Liang *et al*, 2018).

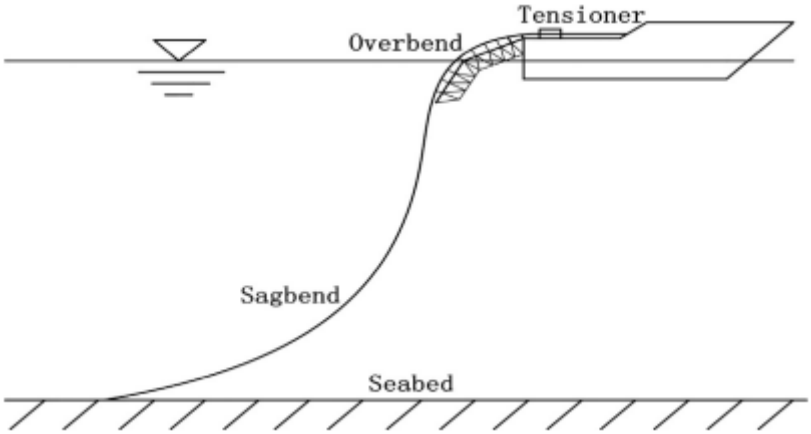

Gambar 2.2. Penggambaran metode instalasi S-lay (Liang et al, 2018)

Analisa perlu dilakukan pada metode ini, untuk mengetahui apakah pada saat instalasi terjadi kegagalan atau tidak. Untuk itu, perlu diperhatikan tegangan dan regangan yang terjadi pada kondisi *overbend* dan *sagbend* dalam metode instalasi ini. Pada area *overbend*, pipa melengkung dari mulai kondisi horizontal hingga bengkok dengan sudut sebesar sudut di mana pipa meninggalkan stinger. Deformasi besar yang terjadi pada kondisi *overbend* dikarenakan pipa dipengaruhi beban gabungan dari pembengkokan, tegangan aksial, gaya reaksi rol dan gerakan kapal pipelay (Peng Xie *et al*, 2015). Setelah pipa melewati stinger dan kemudian tenggelam kedalam air, *bending moment* yang sebelumnya memengaruhi pipa saat overbend berbalik arah dan pipa akan dipengaruhi oleh gaya lingkungan baik arus maupun gelombang. Pada area *sagbend*, pipa akan membengkok akibat pengaruh dari berat pipa itu sendiri dan interaksi dari tanah. Dalam dua kondisi ini, tensioner yang dipasang pada *barge* digunakan untuk menentukan besaran tegangan horizontal ke pipa di ujung atas dan mengontrol

konfigurasi pipa di sagbend (Gong dan Xu, 2016). Selain itu, selama proses instalasi menunjukkan bahwa efek beban utama pada pipa bawah laut adalah dikarenakan *bending* yang dikombinasikan dengan *longitudinal force* yang juga mengalami *external hydrostatic pressure*. Pipa yang mengalami *bending* bisa mengalami kegagalan karena *local buckling*, *collapse*, atau *fracture* (Bai dan Bai, 2014). Karakteristik cacat struktural dari proses instalasi pipa menggunakan metode *S-Lay* dan *J-Lay* praktis tidak mempengaruhi umur dari logam jika berada dibawah pembebanan siklik dengan amplitudo rendah (260 MPa) dan memiliki pengaruh signifikan dalam kisaran amplitudo tinggi (σ=320 MPa) (Poberezhnyi *et al*, 2016). Oleh karena itu, diperlukan adanya kontrol terhadap tegangan dan regangan yang terjadi saat instalasi dengan kriteria yang sesuai dengan kondisi di lapangan.

2.2.3. Teori Gerakan Bangunan Apung

Sebuah kapal dalam kondisi operasinya akan mengalami berbagai gerakan akibat pengaruh gelombang. Respon gerakan kapal terhadap gelombang ini yang nantinya perlu diperhatikan untuk memahami posisi kapal pada saat operasi. Secara umum gerakan dari kapal yang terpengaruh gaya gelombang dapat dibagi menjadi dua macam yaitu gerak translasi dan rotasi seperti yang ditunjukkan pada Gambar 2.3.

Menurut *Society of Naval Architects and Marine Engineers* (1989) gerakan translasi pada kapal terbagi menjadi :

1. *Heave*, gerakan keatas/kebawah dari kapal yang bertumpu pada sumbu z
2. *Sway*, gerakan ke kanan/ke kiri dari kapal yang bertumpu pada sumbu y
3. *Surge*, gerakan longitudinal maju/ mundur dari kapal yang bertumpu pada sumbu x

sedangkan pada gerakan rotasi terbagi menjadi :

1. *Roll*, gerakan memutar secara longitudinal dari kapal terhadap sumbu x
2. *Pitch*, gerakan rotasi secara transversal dari kapal terhadap sumbu y
3. *Yaw*, gerakan rotasi menyamping dari kapal terhadap sumbu z

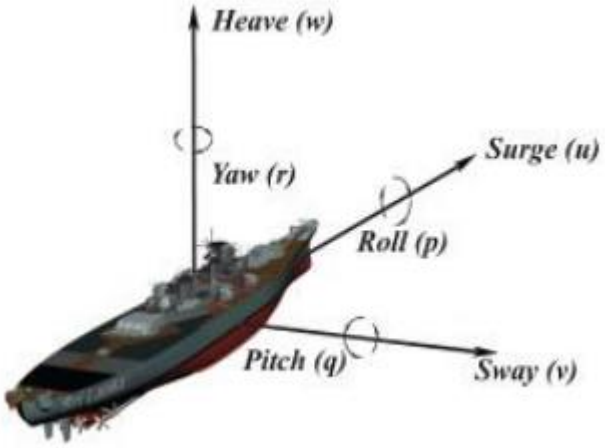

Gambar 2.3. Diagram 6 derajat kebebasan dari suatu kapal (Sandaruwan et al, 2010)

2.2.4. Response Amplitude Operator (RAO)

Response amplitude operator adalah faktor pengali daripada respon struktur akibat gelombang yang mengenai struktur lepas pantai pada frekuensi tertentu. RAO juga disebut sebagai *Transfer Function* karena RAO merupakan alat untuk mentransfer beban luar (gelombang) dalam bentuk respon pada suatu struktur (Romadhoni, 2016). Secara matematis RAO dapat didefinisikan sebagai: ζ

$$RAO = \frac{\zeta_{(x,y,z)}}{\zeta_0} \qquad (2.1)$$

, dimana $\zeta_{(x,y,z)}$ adalah amplitudo gerakan struktur dengan 6 derajat kebebasan dan ζ_0 adalah amplitudo dari gelombang.

2.2.5. Spektrum Gelombang

Dalam menganalisis gerakan barge saat instalasi pipa diperlukan pemilihan spektrum gelombang yang sesuai dengan tempat dimana dilaksanakannya instalasi gelombang. Setiap spektrum gelombang memiliki karakteristik yang berbeda-beda sesuai dengan keadaan asli perairan tersebut. Spektrum-spektrum ini merupakan persamaan matematis yang didapatkan dari hasil percobaan di berbagai perairan di dunia.

2.2.5.1. Spektrum Gelombang JONSWAP

Pada tahun 1968-1969 program perhitungan gelombang, yang dikenal dengan nama *Joint North Sea Wave Project* atau biasa disebut dengan JONSWAP dilakukan sepanjang garis sepanjang 100 mil dari *North Sea* ke Pulau Sylth. Menurut Hasselmann et al (1973), setelah dilakukan analisis terhadap data-data yang telah didapat, diketahui bahwa spektrum gelombang tidak pernah sepenuhnya berkembang dari energi angin. Spektrum gelombang berkembang melalui non-linier, hasil interaksi gelombang bahkan dari jangka waktu yang sangat lama dan jarak. Oleh karena itu, disusunlah persamaan matematis yang merupakan modifikasi dari spektra *Pierson-Moskowitz* yang dapat digunakan pada perairan yang tertutup atau kepualauan. Persamaan spektrum gelombang JONSWAP menurut DNV RP C205 dinyatakan sebagai berikut:

$$S_J(\omega) = \alpha g^2 \omega^{-5} exp\left\{-\frac{5}{4}\left(\frac{\omega}{\omega_p}\right)^{-4}\right\}\gamma^{exp\left\{-0.5\left(\frac{\omega-\omega_p}{\sigma\omega_p}\right)\right\}} \qquad (2.2)$$

Dengan,

$S_j(\omega)$ = Spektrum JONSWAP

α = Konstanta Philips = $\frac{5}{16}\frac{Hs^2\omega_p^2}{g^2}(1 - 0.287 ln\gamma)$

Hs = Tinggi gelombang signifikan

g = percepatan gravitasi (m/s^2)

ω = Frekuensi angular gelombang (rad/s)

ω_p = Frekuensi puncak spektra (rad/s)

σ = Spectral width parameter = $\begin{cases} 0.07 & if\ \omega < \omega_p \\ 0.09 & else \end{cases}$

γ = Peak enhancement factor = $\{\exp(5.75 - 1.15\varphi) \quad 3.6 \leq \varphi < 5$

= jika $\varphi \leq 3.6$, $\gamma = 5$

= jika $\varphi \geq 5$, $\gamma = 1$

2.2.6. Analisis Spektra Respon

Gelombang acak merupakan superposisi dari gelombang-gelombang sinosoidal yang jumlahnya tak terhingga. Intensitas gelombang acak dapat direpresentasikan dalam bentuk energi yang terkandung dalam satu unit luas

permukaan laut, yang kemudian diakumulasi menjadi spektrum gelombang (Djatmiko, 2012). Oleh karena itu, untuk mengetahui respon gerakan bangunan laut terhadap suatu gelombang acak, gelombang acak itu sendiri harus didekomposisi terlebih dahulu menjadi komponen-komponen gelombang reguler. Gelombang acak yang telah terdekomposisi ini yang secara prinsip digambarkan oleh luasan dibawah kurva spektra gelombang S(ω) yang dapat dibagi menjadi pias-pias berdasarkan frekuensinya.

Proses mentransformasikan energi gelombang menjadi energi respon adalah sama saja mentransformasikan spektrum gelombang menjadi respon spektrum. Dikarenakan respon amplitudo struktur dan amplitudo gelombang berhubungan dengan RAO, maka proses transformasi menjadi energi akan diberikan dengan fungsi RAO^2. Dapat disimpulkan bahwa respon bangunan laut dibawah gelombang acak dapat diperoleh dengan mengkorelasikan spektra gelombang S(ω) dengan RAO. Spektra respon bangunan laut yang merupakan hubungan antara spektra gelombang dan RAO, menurut Djatmiko (2012) dapat dinyatakan sebagai berikut:

$$S_{r\zeta}(\omega) = RAO^2 \cdot S(\omega) \tag{2.3}$$

Dimana,

Srζ(ω) = Respon Spektra

Sζ(ω) = Spektrum gelombang

RAO = Response Amplitude Operator

ω = Frekuensi gelombang (rad/s)

Adapun dalam melakukan analisis spektra, parameter respon spektra diperlukan untuk menghitung amplitudo struktur pada gelombang acak dengan mendefinisikan fungsi m0 yang merupakan fungsi varian elevasi permukaan gelombang. Secara umum fungsi m0 didefinisikan sebagai besar luasan spektra respon (Srζ(ω)) atau secara matematis ditulis sebagai berikut,

$$m_0 = \int_0^\infty S_{r\zeta}(\omega) d\omega \tag{2.4}$$

Kemudian untuk varian kecepatan dan percepatan gelombang juga dapat diketahui dengan menggunakan persamaan dibawah ini,

$$m_2 = \int_0^\infty \omega^2 S_{r\zeta}(\omega) d\omega \quad (2.5)$$

$$m_4 = \int_0^\infty \omega^4 S_{r\zeta}(\omega) d\omega \quad (2.6)$$

Varian m2 dan m4 diistilahkan sebagai momen ke-2 dan ke-4 dari luasan di bawah kurva spektra gelombang. Dengan demikian momen spektra dapat diberikan dalam bentuk umum :

$$m_n = \int_0^\infty \omega^n S_{r\zeta}(\omega) d\omega \quad (2.7)$$

Momen diatas dapat digunakan untuk menghitung parameter tinggi respon struktur signifikan, tinggi respon struktur rata-rata, tinggi respon struktur 1/10 tertinggi dengan menggunakan persamaan 2.8-2.10,

$$H_{av} = 2.50\sqrt{m_0} \quad (2.8)$$

$$H_{1/10} = 5.08\sqrt{m_0} \quad (2.9)$$

$$H_s = 4.00\sqrt{1 - \varepsilon^2/_2} \times \sqrt{m_0} \quad (2.10)$$

Dengan,

$$\varepsilon = \sqrt{1 - \frac{{m_2}^2}{m_0 m_4}} \quad (2.11)$$

2.2.7. *Initiation*

Initiation merupakan proses awal dalam tahapan instalasi pipa di laut lepas. Prosesnya dimulai ketika pipa disambung ke *initiation head*, lalu dilanjutkan dengan penyambungan joint per joint hingga pipa berada di ujung stinger, kemudian proses penyambungan dihentikan sejenak untuk dilakukan penyambungan antara *initiation head* dengan DMA (*Dead Man Anchor*) atau *Jacket Leg*. Setelah penyambungan selesai, dilanjutkan kembali proses penyambungan joint per joint dari pipa hingga initiation head berada diatas seabed. Proses dari initiation diakhiri bila sudah terdapat 1-2 pipa diatas seabed, selanjutnya dilakukan proses *normal lay*. Ilustrasi untuk proses *initiation* dapat dilihat pada Gambar 2.4 dibawah ini.

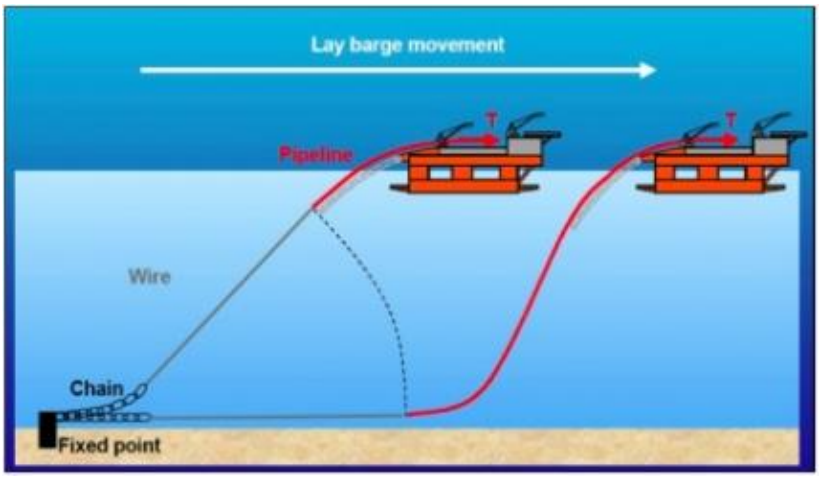

Gambar 2.4. Ilustrasi tahapan *Initiation* pada proses instalasi pipa

2.2.8. *Laydown*

Proses *laydown* pipa adalah prosedur standar di mana Abandonment and Recovery (A & R) winch terhubung ke kepala laydown yang dilas ke ujung saluran pipa. *Pipelay barge* bergerak ke depan sementara tegangan yg terjadi saat *laydown* ditransfer dari *tensioners* ke *A&R winch* yang kemudian mengendur sesuai dengan analisis *laydown*. *Barge* terus bergerak maju sampai *laydown head* mendarat di dasar laut. Operasi ini umumnya dimonitor oleh ROV yang dikendalikan dari kapal survei. Ilustrasi untuk proses *laydown* dapat dilihat pada Gambar 2.5 dibawah ini.

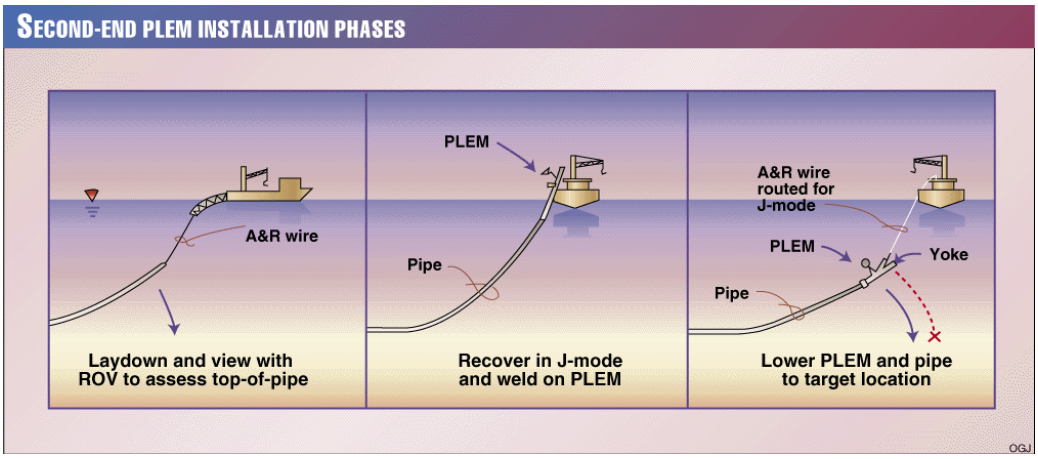

Gambar 2.5. Ilustrasi tahapan Laydown pada proses instalasi pipa (paling kiri)

2.2.9. *Overbend*

Bagian paling atas kurva terbentang dari mulai *tensioner* hingga titik infleksi *pipeline* yang dikenal dengan sebutan *overbend* (Gong *et al*, 2016). Bagian ini ditumpu oleh *laying ramp* yang dipasang pada *stinger*. Fungsi daripada *laying ramp* adalah untuk memberikan tumpuan pada bentuk kurva pipa dengan radius kurvatur yang sesuai, yang nantinya dapat mengontrol besaran tegangan bending dan *strain* pada *pipeline* dalam batasan nilai yang diijinkan. Radius kurvatur sendiri dapat dikendalikan oleh sudut *stinger* yang digunakan. Nilai tegangan bending yang dihasilkan oleh radius kurvatur dan tegangan aksial akan menyebabkan terjadinya tegangan global pada *pipeline* di daerah *overbend*. Besaran tegangan bending yang terjadi pada *overbend* dapat dihitung dengan formula berikut:

$$\sigma_b = \frac{ED}{2 \cdot r_{cv}} \tag{2.12}$$

Dengan,

σ_b = Tegangan Bending

E = Modulus Young (N/m^2)

D = Outside Diameter (m)

R_{cv} = Radius Curvature (m)

Dimana nilai radius curvature didapat dengan formula sebagai berikut:

$$R_{cv} = \frac{ED}{2\sigma_y f_D} \tag{2.13}$$

Dengan,

σ_y = Specified Minimum Yield Strength

f_D = *Design factor*, 0,85

2.2.10. *Sagbend*

Setelah pipa mengalami bending akibat radius kurvatur yang digunakan, pipa kembali lurus kemudian melengkung kembali untuk membentuk bagian bawah dari kurva S, yang dikenal sebagai *sagbend* (O'Grady dan Harte, 2013). Dalam pengaruh gabungan beban akibat tegangan yang terjadi dan berat pipa, pipa menunjukkan defleksi besar dari keadaan bebas tegangannya. Kelengkungan pipa di sagbend diatur oleh tegangan aksial yang diterapkan.

Model paling sederhana untuk menggambarkan hubungan antara tegangan dan kelengkungan adalah model catenary (Bai dan Bai, 2014). Model catenary mengabaikan kekakuan lentur pipa. Komponen horizontal dari tegangan (Th) adalah konstan dari titik di mana pipeline menyentuh dasar laut dan hingga naik ke ujung stinger. Komponen vertikal dari gaya ini (Tv) meningkat dari titik touchdown di dasar laut hingga ke stinger, dikarenakan adanya pengaruh dari berat pipa yang tercelup, lihat Gambar 2.6.

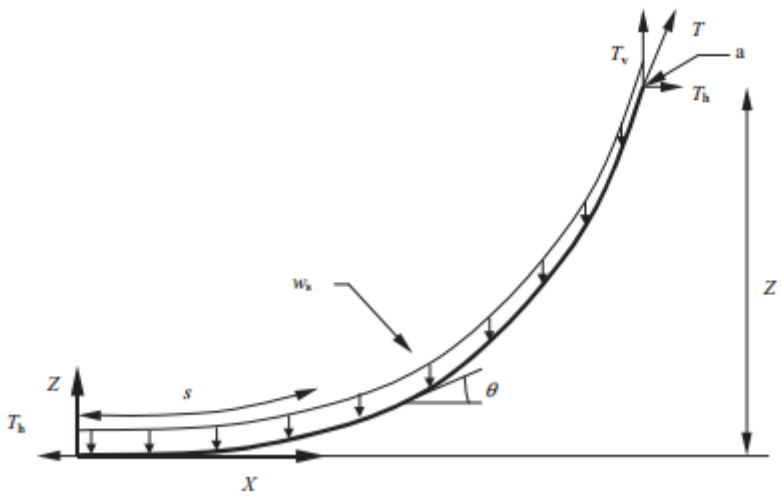

Gambar 2.6. Model *Catenary* (Bai dan Bai, 2014)

Bentuk dari model *catenary* dapat dirumuskan sebagai berikut

$$z = \frac{T_h}{w_s}\left(cosh\frac{xw_s}{T_h} - 1\right) \tag{2.14}$$

Dimana,

x = Jarak horizontal dari titik *touch down*

z = tinggi *catenary* dari *seabed*

T_h = Gaya horizontal pada *seabed*

w_s = Berat tercelup tiap satuan panjang

Kemudian kurvatur didefinisikan sebagai berikut,

$$\frac{d\theta}{ds} = \frac{d^2z}{dx^2}cos\theta = \frac{w_s}{T_h}\cosh\frac{xw_s}{T_h}\cos\theta \tag{2.15}$$

Dengan,

θ = sudut yang terjadi terhadap sumbu x

s = panjang lengkungan kurva pipa

kurvatur terbesar terjadi pada titik *touchdown*, yang diekspresikan sebagai berikut:

$$\frac{1}{R} = \frac{w_s}{T_h} \qquad (2.16)$$

Hubungan antara lengkungan yang terjadi dengan regangan untuk pipa didefinisikan,

$$\varepsilon = \frac{r}{R} \qquad (2.17)$$

Komponen vertikal, T_v, sama dengan berat dari bagian yang terendam dari *pipeline*:

$$T_v = w_s s \qquad (2.18)$$

Dimana s adalah panjang dari bagian yang terendam dari *pipeline* yang diekspresikan sebagai

$$s = z\sqrt{1 + 2\frac{T_h}{zw_s}} \qquad (2.19)$$

Sudut antara *pipeline* dengan bidang x-y adalah

$$\tan\theta = \frac{T_v}{T_h} \qquad (2.20)$$

Nilai dari T_h didapat dengan mensubtitusi persamaan 2.18 dan persamaan 2.19 ke persamaan 2.20, menjadi:

$$T_h = \frac{zw_s}{\tan^2\theta}\left(1 + \sqrt{1 + \tan^2\theta}\right) \qquad (2.21)$$

2.2.11. *Allowable Stress Criteria*

Berdasarkan DNV OSF 101 Sec.13 G 300, kriteria besaran tegangan yang dapat diterima pada saat *overbend* dan *sagbend* adalah sebesar,

$$\sigma_{eq} < 0{,}87 \cdot SMYS \qquad (2.22)$$

, dimana σ_{eq} adalah tegangan ekivalen yang mana merupakan kombinasi tegangan dari hoop stress, longitudinal stress, dan shear stress. Sedangkan

SMYS adalah *Specified Minimum Yield Strength*, yaitu tegangan minimum dari material yang digunakan.

Untuk menghitung tegangan ekivalen (σ_{eq}) diperlukan beberapa besaran dari hoop stress (σ_h) yang mana adalah besaran perbedaan tekanan yang dikarenakan adanya pengaruh dari tekanan didalam dan diluar pipa yang menekan bagian radial dari pipa, seperti pada Gambar 2.7. Jika hal ini tidak diperhitungkan dengan baik dan *hoop stress* yang terjadi terlalu besar, maka dinding pipa tidak mampu menahan tegangan yang terjadi karena sudah melewati titik *yield strength* materialnya dan pada akhirnya pipa akan pecah. Untuk mencegah hal ini DNV OS F101 menjadikan *hoop stress* sebagai kriteria yang penting dalam proses mendesain pipa dan merumuskannya sebagai berikut :

$$\sigma_h = (p_i - p_e)\frac{D-t_2}{2t_2} \qquad (2.23)$$

Dengan,

σ_h = Hoop Stress

pi = Tekanan internal

pe = Tekanan eksternal

D = Pipeline Outside Diameter

$t_2 = t - t_{corr}$

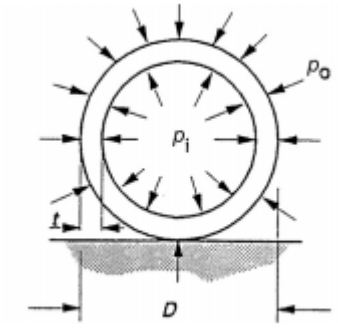

Gambar 2.7. *Hoop Stress* pada pipa (Bai dan Bai, 2014)

Kemudian, diperlukan juga besaran *longitudinal stress* yang mana terjadi dikarenakan *poisson ratio* dari material dan perubahan temperatur yang terjadi (Palmer dan King, 2008). Dalam operasinya, *pipeline* akan mengalami tekanan

internal yang bekerja melingkar di seluruh permukaan dinding pipa (*circumferential tensile stress*), kemudian akibat *circumferential stress* akan membuat ukuran *pipeline* semakin membesar, sehingga diameter pipa akan membesar dan menekan pada arah longitudinal dan akhirnya pipa akan berkurang panjangnya akibat longitudinal stress. Selain itu, pipa akan mengalami ekspansi ke segala arah akibat adanya perubahan suhu dan menimbulkan longitudinal stress yang digambarkan pada Gambar 2.8. Menurut DNV OS F101 *longitudinal stress* dapat dirumuskan sebagai berikut :

$$\sigma_l = \frac{N}{\pi(D-t_2)t_2} + \frac{M}{\frac{\pi(D^4-(D-2t_2)}{32D}} \tag{2.24}$$

, dimana

σ_l = Longitudinal stress

N = Gaya aksial yang terjadi pada dinding pipa

M = Bending moment

D = Diameter luar pipa

t_2 = Ketebalan pipa ($t-t_{corr}$)

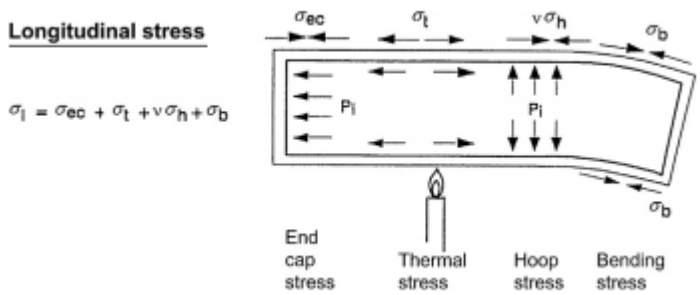

Gambar 2.8. Faktor yang memengaruhi *Longitudinal Stress* pada pipa (Bai dan Bai, 2014)

Terakhir, adalah tangential shear stress yang mana adalah tegangan geser akibat adanya tekanan dari luar dan pergerakan fluida di dalam pipa. Secara teori, *tangential shear stress* adalah gaya yang bekerja sejajar bidang dan mengakibatkan defleksi dan bahkan momen puntir pada bidang tersebut. Dalam kasus *pipeline*, *pipeline* akan dipengaruhi oleh gaya dari luar yaitu gaya merata dari tekanan yang disebabkan lingkungan laut dan gaya yang ditimbulkan oleh pergerakan fluida di dalam pipa. Oleh karena itu,

Tegangan ekivalen (*equivalent stress*) diperlukan untuk menentukan batas tegangan yang terjadi pada saat *overbend* dan *sagbend*. Nilai dari tegangan ekivalen bisa didapat ketika semua nilai dari komponen penyusunnya telah diketahui kemudian dihitung dengan menggunakan persamaan dibawah. Berdasarkan DNV OS F101 nilai tegangan ekivalen adalah:

$$\sigma_e \leq \sqrt{{\sigma_h}^2 + {\sigma_l}^2 - \sigma_h \sigma_l + 3{\tau_{hl}}^2} \qquad (2.25)$$

Dengan,

σ_h = Hoop Stress

σ_l = Longitudinal Stress

τ_{hl} = Tangential Shear Stress

2.2.12. Allowable Strain Criteria

Menurut DNV OS F101 pada Sec. 13 G 300 *Simplified Laying Criteria*, batasan maksimal regangan yang terjadi pada kondisi *overbend* adalah:

Tabel 2.2. *Simplified Laying Criteria* DNV OS F101

Criterion	X70	X65	X60	X52
I	0,270%	0,250%	0,230%	0,205%
II	0,325%	0,305%	0,290%	0,260%

Untuk perhitungan beban statis, regangan yang terjadi harus mengikuti *Criterion I* sesuai dengan Tabel 2.1. Regangan yang terjadi harus dipengaruhi efek beban dari *bending*, gaya aksial, dan *roller loads*. Efek yang disebabkan oleh variasi kekakuan (*stiffness*) pada *field joint* dan *buckle arrestors* tidak diperhitungkan. Sedangkan untuk perhitungan dengan beban statis dan dinamis harus mengikuti *Criterion II* yang ditunjukkan tabel 2.1. Regangan yang terjadi harus dipengaruhi oleh semua efek, termasuk variasi kekakuan pada *field joint* dan *buckle arrestors*.

2.2.13. Perhitungan berat pipa yang terendam

Sebelum dapat menghitung berapa tension yang diperlukan, perhitungan berat pipa saat terendam sangat diperlukan untuk menentukan kebutuhan tension pada tensioner. Adapun pipa terdiri dari beberapa lapisan seperti lapisan anti

korosi, lapisan *concrete coating* serta baja penyusun pipa itu sendiri seperti pada Gambar 2.9.

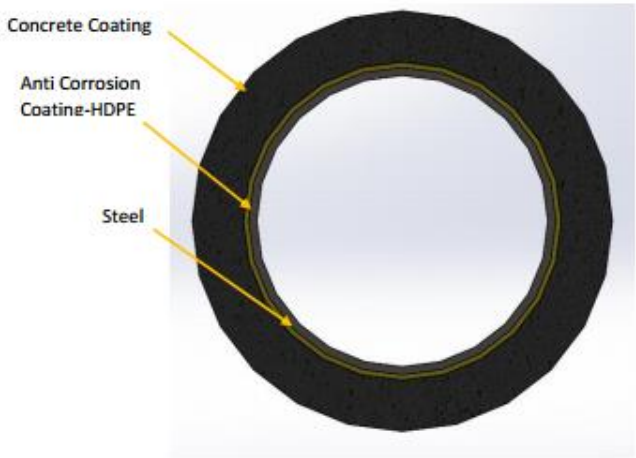

Gambar 2.9. Bagian lapisan-lapisan yang melindungi pipa (Fauzanullah, 2017)

Tiap-tiap lapisan pipa tersebut memiliki berat sendiri sesuai dengan massa jenis masing-masing lapisan dan ukurannya. Untuk dapat mengetahui berat pipa luasan pipa tersebut perlu diketahui dulu, oleh karena itu dalam perhitungan berat pipa yang terendam diperlukan perhitungan diameter tiap tiap lapisan menggunakan persamaan dibawah ini,

$$D_i = OD - 2 \cdot WT \tag{2.26}$$

$$D_{CC} = OD + 2 \cdot t_{CC} \tag{2.27}$$

$$D_{conc} = D_{cc} + 2 \cdot t_{conc} \tag{2.28}$$

$$D_{fj} = OD + 2 \cdot t_{cc} + 2 \cdot t_{fj} \tag{2.29}$$

Dengan,

Di = Diameter dalam pipa

WT = Tebal pipa

t_{cc} = Tebal anti korosi

D_{cc} = Diameter anti korosi

D_{conc} = Diameter *concrete coating*

t_{conc} = Tebal *concrete coating*

D_{fj} = Diameter *field joint coating*

t_{fj} = Tebal lapisan *field joint coating*

OD = Diameter luar pipa

Kemudian dari persamaan diatas dimasukkan ke perhitungan berat pipa tiap lapisan pipa. Sederhananya perhitungan berat pipa menggunakan konsep kerapatan massa dimana kerapatan massa bergantung oleh massa suatu benda dengan volume benda tersebut. Begitu pun pada perhitungan berat pipa per satuan panjang yang mana sama dengan perkalian antara kerapatan massa dengan luasan benda tersebut atau sama dengan volume per satuan panjang dari benda tersebut

$$W_{st} = \frac{\pi}{4} \cdot (OD^2 - Di^2)\rho_{st} \tag{2.30}$$

$$W_{cc} = \frac{\pi}{4} \cdot ({D_{cc}}^2 - OD^2)\rho_{CC} \tag{2.31}$$

$$V_{conc} = \frac{\pi}{4} \cdot ({D_{conc}}^2 - {D_{CC}}^2) \tag{2.32}$$

$$W_{conc} = V_{conc} * \rho_{conc} \tag{2.33}$$

Dengan,

W_{st} = Berat baja pada pipa

ρ_{st} = Massa jenis baja

W_{cc} = Berat anti korosi

ρ_{cc} = Massa jenis anti korosi

V_{conc} = Volume *concrete coating*

W_{conc} = Berat *concrete coating*

ρ_{conc} = Massa jenis *concrete coating*

Bouyancy adalah salah satu faktor yang perlu dipehitungkan untuk memperkirakan berat pipa yang terendam. Lalu dalam proses penyambungan 1 pipa dengan pipa lainnya diperlukan adanya *field joint coating* untuk melindungi serta memberikan *bouyancy* yang sesuai pada bagian ujung pipa yang sebelumnya masih berupa pipa besi utuh. Semua faktor ini diperlukan untuk menghitung berat pipa yang terendam. Persamaan dibawah ini dapat digunakan untuk menghitung berat total pipa yang terendam beserta lapisan yang melindunginya,

$$B = \frac{\pi}{4} \cdot {D_{conc}}^2 \cdot \rho_w \tag{2.34}$$

$$W_1 = W_{st} \cdot L_j + (W_{cc} + W_{conc}) \cdot (L_j - 2 \cdot L_{cb}) \tag{2.35}$$

$$W_2 = \rho_{fj} \cdot [\pi \cdot Lcb \cdot \frac{{D_{fj}}^2 - OD^2}{2} + 2 \cdot \pi \cdot C_b \cdot {t_{fj}}^2 \cdot [\frac{OD}{2} + (t_{fj}) \cdot \frac{2}{3}]] \tag{2.36}$$

$$W_3 = -2 \cdot \pi \cdot \rho_{conc} \cdot C_b \cdot {t_{conc}}^2 \cdot (\frac{D_{cc}}{2} + \frac{tconc}{2}) \tag{2.37}$$

$$W_{air} = \frac{(W_1 + W_2 + W_3)}{Lj} \tag{2.38}$$

$$W_{sa} = W_{air} + \frac{\xi}{100} \cdot V_{conc} \cdot \rho_w - B \tag{2.39}$$

Dengan,

B = Bouyancy pipa

ρ_w = Massa jenis air

W_1 = Berat pipa tanpa *field joint coating*

L_j = Panjang pipa

L_{cb} = Panjang Cutback

W_2 = Berat *field joint coating*

ρ_{fj} = Massa jenis *field joint coating*

C_b = Panjang concrete bevel

W_3 = Efek dari *concrete bevel*

W_{aa} = Berat pipa di darat

W_{sa} = Berat pipa terendam

2.2.14. Analisa perhitungan *tension* yang dibutuhkan

Tujuan dibutuhkannya insinyur pipa adalah untuk mengontrol bentuk *catenary* agar pipa baik dalam kondisi overbend maupun sagbend tetap dibawah besaran yang dianjurkan dan menggunakan besaran *tension* seminim mungkin. Selama *barge* bergerak ke depan dan menahan *tension* pada pipa, bersama dengan besaran berat pipa yang tercelup dan kedalaman laut, semua faktor tersebut menentukan bentuk *catenary* dari pipa yang akan diinstalasi seperti pada Gambar 2.10. Dalam *Offshore Pipeline Construction Volume I* (2004) dijelaskan bahwa kita dapat mengontrol besaran *tension* yang digunakan sesuai dengan gerakan *barge* dengan persamaan sebagai berikut:

$$T = H + wd \tag{2.40}$$

Dimana,

T = *Applied Tension* (kN)

H = Komponen gaya horizontal dari T (kN)

w = Berat pipa tercelup (N/m)

d = Kedalaman laut (m)

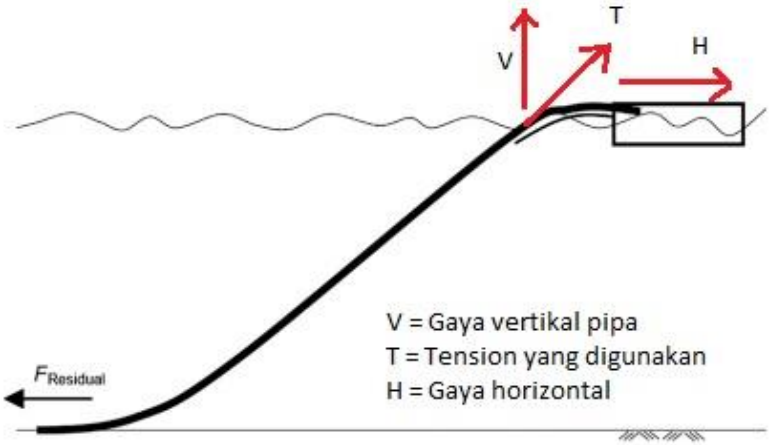

Gambar 2.10. Konfigurasi gaya pada instalasi pipa

Besaran *tension* yang digunakan saat instalasi bergantung pada besaran berat pipa tercelup dan kedalaman perairan. Namun, jika terjadi tegangan bending yang berlebihan terjadi di daerah *sagbend*, maka *lay tension* yang digunakan bisa diperbesar sesuai dengan kemampuan dari *tensioner*.

Semakin besar radius stinger maka semakin kecil tegangan bending yang terjadi di daerah *overbend*. Penggambaran radius stinger dapat dilihat pada Gambar 2.11. Oleh karena itu, untuk menentukan besaran *tension* yang digunakan kita perlu mengetahui nilai radius stinger yang digunakan dengan rumus sebagai berikut:

$$R_{cv} = \frac{ED}{2\sigma_y f_D} \tag{2.41}$$

Dimana,

R_{cv} = Radius Stinger (m)

E = Modulus Young (N/m^2)

D = Diameter Pipa (m)

σ_y = Tegangan ijin material pipa (MPa)

f_D = Faktor desain (0,85)

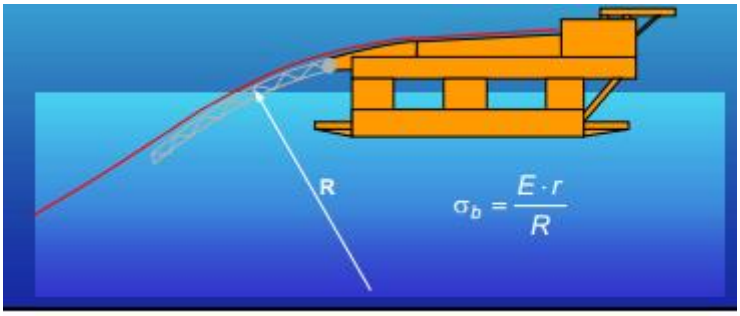

Gambar 2.11. Ilustrasi Radius *Stinger* Pipa

Setelah didapatkan nilai radius curvature yang digunakan kita dapat menghitung besaran komponen gaya horizontal dengan rumus:

$$H = R_{cv} \cdot w_s \tag{2.42}$$

Dengan,

H = Komponen gaya horizontal (kN)

R_{cv} = Radius Stinger (m)

w_s = Berat pipa tercelup (N/m)

2.2.15. *Weather Restricted Operation*

Sebelum proses instalasi dilakukan harus diperhatikan proses *pre-lay survey*, yaitu adalah survei yang dilakukan sebelum dilakukannya instalasi pipa bawah laut dengan mengidentifikasi kondisi kontur dasar laut dan kondisi lingkungan daerah dimana instalasi pipa bawah laut akan dilakukan, dimana pada kondisi lingkungan tersebut terdapat kondisi yang dinamakan *weather restricted operation*. Menurut DNV OS F101 (2013) Sec 4 C603, Operasi dengan periode operasi yang direferensikan (T_R) kurang dari 96 jam dan periode operasi yang direncanakan (T_{POP}) kurang dari 72 jam dapat didefinisikan sebagai *weather restricted operation*. Periode referensi operasi (T_R) adalah periode operasi yang direncanakan (T_{POP}) termasuk waktu darurat, (T_C). Pada kondisi tersebut terdapat beberapa kriteria sebelum dapat melakukan proses instalasi, yang mana telah diatur dalam DNV OS H101 (2011). Dalam standar tersebut ditentukan besaran tinggi gelombang maksimum yang boleh terjadi untuk kondisi *weather restricted operation* yang didasarkan pada *storm factor* dan tinggi gelombang signifikan seperti pada Persamaan 2.43 dibawah ini

$$H_{max} = STF \cdot H_s \tag{2.43}$$

Dengan,

H_{max} = Tinggi gelombang maksimum (m)

STF = *Storm factor*, 2 untuk tiap periode referensi (T_R)

H_s = Tinggi gelombang signifikan (m)

Dijelaskan pula dalam DNV OS H101 bahwa batasan respon maksimum dan signifikan dari *barge* untuk metode spektra diatur dengan menginvestigasi rentang harga *zero up crossing period* (T_z) berdasarkan persamaan dibawah ini,

$$8{,}9 \cdot \sqrt{\frac{Hs}{g}} \leq T_z \leq 13 \qquad H_s \leq 5{,}7\ m \tag{2.44}$$

$$8{,}9 \cdot \sqrt{\frac{H_s}{g}} \leq T_z \leq 17 \cdot \sqrt{\frac{H_s}{g}} \qquad H_s \geq 5{,}7\ m \tag{2.45}$$

Dimana,

T_z = *zero up crossing period* (sec)

g = Konstanta gravitasi (m/s^2)

2.2.16. Perhitungan Peralatan *Lifting*

Proses peletakkan pipa keatas *seabed* baik dalam tahap *initiation* dan *laydown* merupakan salah satu proses *lifting*, dimana dalam pengerjaannya memerlukan peralatan *lifting* seperti *sling*, dan *shackle*. Sebelum dapat digunakan sesuai dengan kebutuhannya peralatan tersebut harus didesain agar mampu menahan beban operasinya. Dalam DNV OS H205 Sec. 4.1 dan 4.2 telah dijelaskan bagaimana analisis yang harus dilakukan dalam memilih properti *sling* dan *shackle*. Bahwa *sling* harus memenuhi persyaratan sebagai berikut,

$$F_{sling} < \frac{MBL_{sling}}{\gamma_{sf}} \tag{2.46}$$

Dimana,

F_{sling} = Maksimum gaya *tension* statis (kN)

MBL_{sling} = *Maximum Breaking Load* (kN)

γ_{sf} = *Safety Factor*, Dengan nilai faktor harus yang paling besar dari 2 persamaan

$$\gamma_{sf} = \gamma_f \cdot \gamma_c \cdot \gamma_r \cdot \gamma_w \cdot \gamma_m \cdot \gamma_{tw} \tag{2.47}$$

$$\gamma_{sf} = 2{,}3 \cdot \gamma_r \cdot \gamma_w \cdot \gamma_{tw} \tag{2.48}$$

Dengan,

γ_f = *Load Factor*, 1,3

γ_c = *Consequence Factor*, 1,3

γ_r = *Reduction Factor*, harus ditentukan dengan membandingkan nilai terbesar dari γ_s (*End Termination Factor*) dan γ_b (*Bending Factor*) dengan nilai γ_s dapat dilihat pada Tabel 2.2 dibawah ini,

Tabel 2.3. Faktor *End Termination* Berdasarkan Jenis Cover Sling

Parameter	End Termination Factor Berdasarkan DNV OS H205				
	Hand Spliced	Ferrules	Metal and Resin Socket	Cable Laid Slings Spliced	Fibre Slings
Value (γ_s)	1,25	1,12	1	1,33	1

Sedangkan γ_b (*Bending Factor*) dapat dicari dengan menggunakan persamaan berikut,

$$\gamma_b = \frac{1}{1-\frac{0,5}{\sqrt{\frac{D}{d}}}} \tag{2.49}$$

Dimana,

D = Ukuran diameter dari *sling* yang dipuntir (Jika bervariasi, gunakan minimum diameternya)

d = Nominal diameter dari wire rope

γ_w = *Wear and Application Factor*, 1 untuk *steel slings*

γ_m = *Material Factor*, 1.5 untuk *steel wire rope slings*

γ_{tw} = *Twist Reduction Factor* akibat kemungkinan sling mengalami puntiran saat operasi, 1.3

Kemudian untuk penentuan *shackle*, DNV OS H205 telah menentukan bahwa beban dinamis yang diperbolehkan tidak boleh melebihi nilai minimum dari persamaan berikut:

a) SWL x DAF
b) MBL/3.0

Dengan SWL merupakan SWL yang didapat dalam perhitungan *sling*.

2.2.17. Analisa menggunakan *software*

Dalam tugas akhir ini, penulis akan menggunakan software OFFPIPE untuk menghitung tegangan dan regangan yang terjadi selama proses instalasi *pipeline*, dan penulis juga akan menggunakan software MOSES untuk memodelkan *pipe*

laying barge agar didapatkan bentuk dan volume yang sama dengan aslinya serta permodelan tersebut dapat digunakan untuk mengetahui respon gerakan dari *barge* tersebut.

2.2.17.1. OFFPIPE

Dalam menganalisa proses instalasi *pipeline*, kita dapat menggunakan bantuan *software* untuk membantu menganalisa tegangan dan regangan yang terjadi saat instalasi. Salah satu yang paling banyak digunakan adalah OFFPIPE. OFFPIPE adalah perangkat lunak yang menggunakan prinsip metode elemen hingga yang dikembangkan secara khusus untuk memodelkan dan menganalisa masalah struktur nonlinier yang terjadi pada saat instalasi pipa bawah laut (Bai dan Bai, 2014). Kemampuan *software* ini antara lain:

1. Analisis dinamis dan statis saat proses instalasi pipa bawah laut dengan metode S-lay atau J-lay.
2. Analisis *davit lifting* untuk instalasi *riser* dan *subsea tie-ins*
3. Analisis proses *initiation* dan *laydown* pada saat instalasi pipa bawah laut
4. Analisis tegangan, *span lengths* dan defleksi pada pipa akibat kontur laut yang tidak rata.

Untuk menganalisis proses instalasi *pipeline* dengan menggunakan perangkat lunak OFFPIPE dilakukan dengan memodelkan segala perangkat pada instalasi pipa sebagai model elemen hingga (Gambar 2.12).

Dalam memodelkan proses *initiation* ke *software* OFFPIPE, pertama-tama kita perlu memodelkan berbagai perangkat pada instalasi pipa seperti pipa, *initiation head*, dan *cable*. Kemudian secara *step by step* model yang sebelumnya dibuat ditambahkan *pipe joint*. Jadi akan ada beberapa case yang akan dimodelkan dalam satu proses analisis tergantung banyaknya penambahan *pipe joint*. *Case* diakhiri ketika sudah terdapat 1-2 *pipe joint* diatas *seabed*.

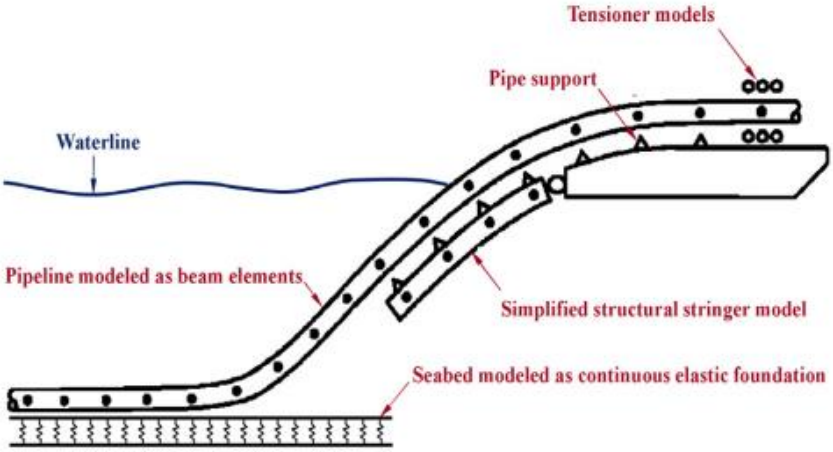

Gambar 2.12. Model Elemen Hingga dari sistem *pipelaying* (OFFPIPE, 2013)

2.2.17.2. MOSES

Sebelumnya telah kita ketahui bahwa beberapa perangkat instalasi *pipeline* dapat dimodelkan dengan menggunakan *software* OFFPIPE, namun dalam proses instalasi *pipeline* diperlukan bantuan *barge* untuk menyatukan beberapa pipa menjadi 1 sambungan pipa yang kemudian diletakkan diatas seabed. Karena itu, kita perlu memodelkan *barge* untuk mendapatkan respon *barge* terhadap gelombang yang terjadi agar kita dapat mengetahui akibat respon *barge* terhadap pipa yang sedang diinstalasi. Untuk memodelkan *barge*, diperlukan *software* yang mampu memodelkan bagian-bagian luar dari kapal seperti pada Gambar 2.13. Digunakanlah *software* MOSES untuk memberikan pemodelan yang sama dengan *barge* aslinya.

MOSES adalah *software* hidrostatik dan hidrodinamik tingkat lanjut yang menyediakan perhitungan dan simulasi akurat untuk sistem bangunan apung lepas pantai. *Software* MOSES dapat digunakan untuk meghitung stabilitas dan analisis gerakan dalam domain frekuensi. MOSES juga dapat memodelkan lambung dan kompartemen kapal yang dianalisis menggunakan *strip theory* untuk mendapatkan respon gerakan dari bangunan tersebut. Operasi instalasi untuk *loadout* dan transportasi berbasis frekuensi dapat dilakukan dengan MOSES.

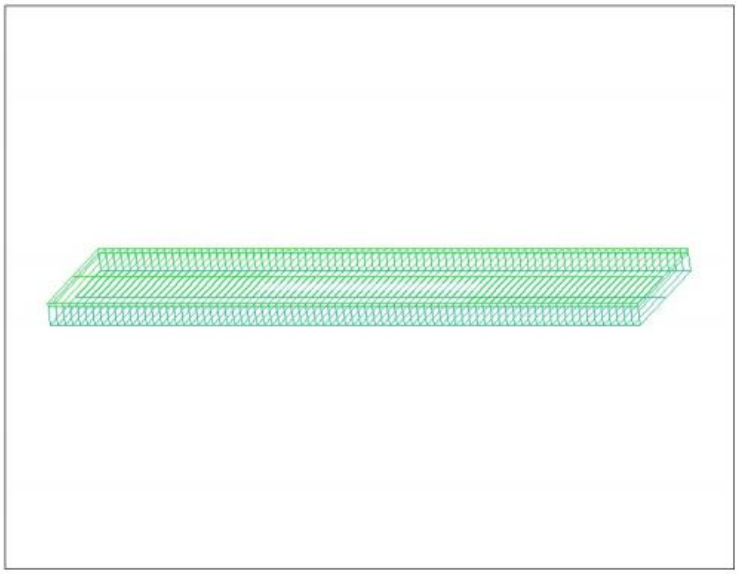

Gambar 2.13. Contoh permodelan struktur sederhana di MOSES (MOSES, 2013)

(Halaman ini sengaja dikosongkan)

BAB 3 METODOLOGI PENELITIAN

3.1. Metodologi Penelitian

Langkah-langkah dalam mengerjakan penelitian ini dapat dilihat secara sistematis melalui Gambar 3.1 dibawah ini,

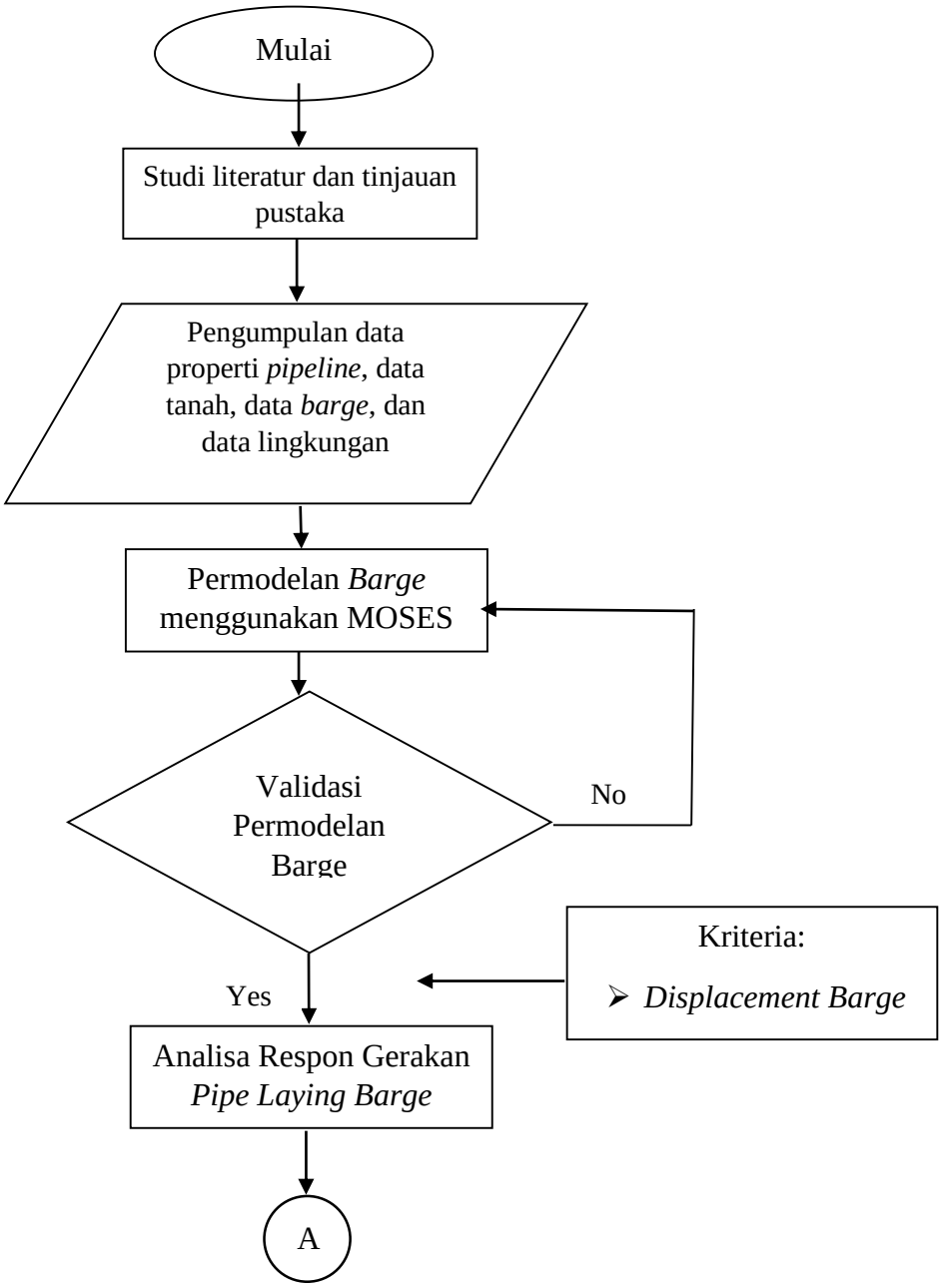

Gambar 3.1. Diagram Alir Pengerjaan Tugas Akhir

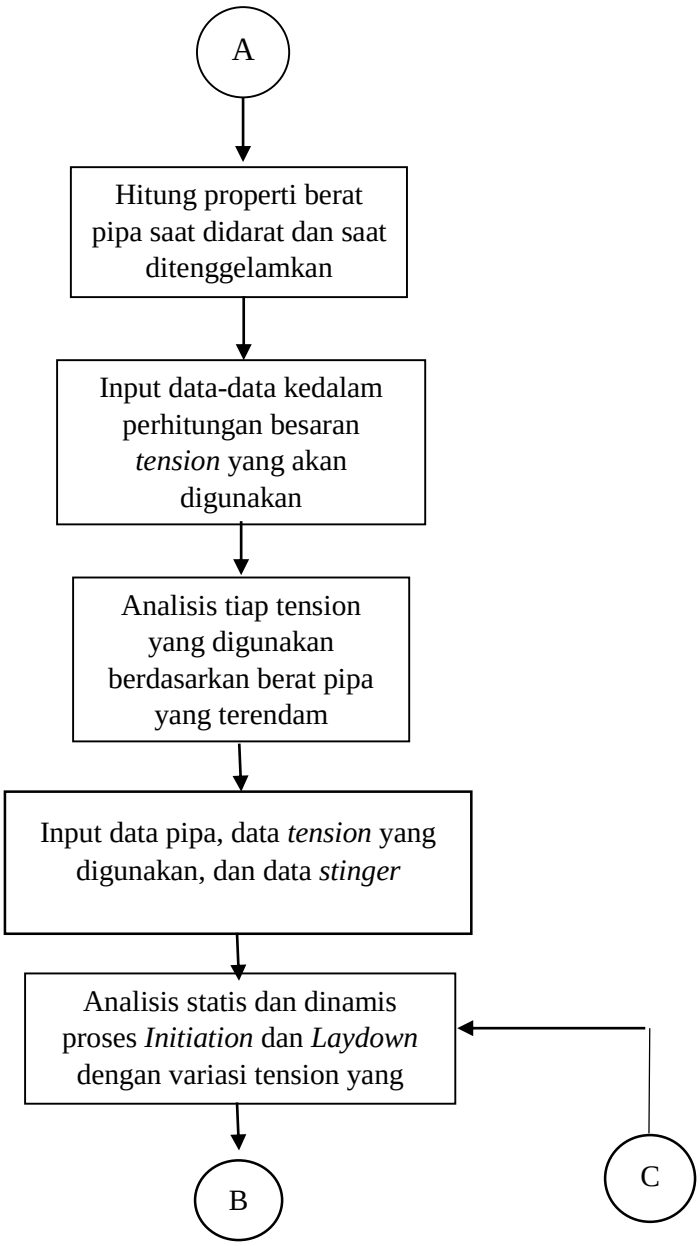

Gambar 3.1. Diagram alir pengerjaan Tugas Akhir (Lanjutan)

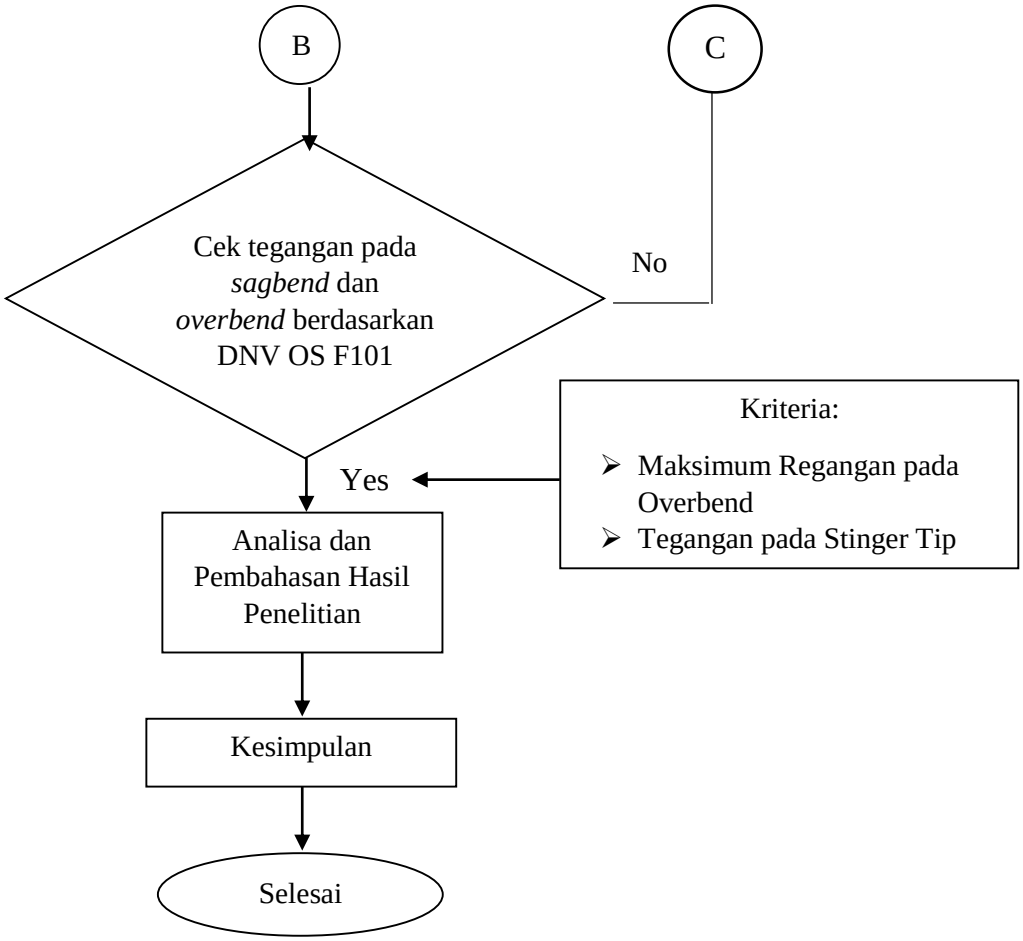

Gambar 3.1. Diagram alir pengerjaan Tugas Akhir (Lanjutan)

3.2. Penjelasan Diagram Alir

1. Studi Literatur dan Tinjauan Pustaka

   Pada tahap ini penulis mengumpulkan referensi dari buku, jurnal, dan tugas akhir yang berhubungan dengan analisis tegangan dan regangan pada instalasi *pipeline*. Salah satu referensi yang penulis pelajari adalah milik Yong Bai dan Febrianti yang membahas batasan-batasan yang digunakan untuk menganalisa proses instalasi *pipeline*.

2. Pengumpulan data properti *pipeline*,data *cable*, data *pipelaying barge*, dan data lingkungan

   Data yang digunakan penulis untuk tugas akhir ini adalah data milik PHE ONWJ pada proyek

3. Permodelan *barge* menggunakan *software* MOSES

   Permodelan *pipelaying barge* dibuat dengan menggunakan *software* dengan memperhatikan data-data yang telah didapat.

4. Validasi Permodelan *barge*

   Validasi permodelan *barge* digunakan untuk memvalidasi *barge* yang dimodelkan terhadap keadaan *barge* aslinya. Proses validasi pada tahap ini berdasarkan kriteria validasi pada IACS (*International Associations of Classification Societies*).

5. Analisis respon gerakan pada *pipelaying barge*.

   Menganalisis respon gerakan dari model *pipelaying barge* DLB-01 yang terpengaruh oleh gelombang acak.

6. Hitung berat properti pipa saat didarat maupun terendam

   Pada tahap ini dilakukan perhitungan berat pipa, *concrete weight coating*, dan *cable* didarat maupun terendam yang digunakan untuk menghitung besaran *tension* yang digunakan.

7. Input data-data kedalam perhitungan besaran *tension* yang akan digunakan

   Memasukkan data-data berat pipa, *concrete weight coating*, dan *cable* yang telah dihitung tadi ke perhitungan *tension* yang digunakan.

8. Analisis tiap tension yang digunakan berdasarkan berat pipa yang terendam

   Melakukan perhitungan besaran *tension* yang digunakan berdasarkan radius kurvatur yang digunakan dan berat pipa, *concrete weight coating*, dan *cable* yang terendam.

9. Input data pipa, data *tension* yang digunakan, dan data *stinger*

   Memasukkan data pipa, data *tension* yang digunakan, dan data *stinger* yang telah didapatkan ke dalam *software* OFFPIPE.

10. Analisis statis proses *Initiation* dan *Laydown* dengan variasi tension yang digunakan

    Menganalisis variasi nilai tegangan dan regangan yang terjadi saat proses *initiation* dan *laydown* dengan variasi *tension* yang digunakan

11. Cek tegangan pada *sagbend* dan *overbend* berdasarkan DNV OS F101

    Setelah dilakukan simulasi dalam OFFPIPE hasil yang telah didapat diperiksa apakah nilai tegangan dan regangan yang terjadi pada saat *Initiation* dan *Laydown* memenuhi kriteria yang ditentukan oleh DNV OS F101

12. Analisa dan Pembahasan Hasil Penelitian

    Hasil perhitungan dan simulasi pada proses *initiation* dan *laydown* yang telah memenuhi kriteria DNV OS F101 dilampirkan pada laporan

13. Kesimpulan

    Setelah didapat hasil perhitungan dari berbagai tahapan analisis, dapat disusun beberapa kesimpulan dan saran yang dapat berguna untuk penelitian yang akan dilakukan kedepannya.

(Halaman ini sengaja dikosongkan)

BAB 4 ANALISIS DAN PEMBAHASAN

4.1. Pengumpulan dan Identifikasi Data

Pada analisis yang dilakukan, penulis menggunakan data *Pipeline Replacement BG to BC Project* yang telah dilaksanakan di Laut Jawa tepatnya di utara pesisir Karawang. Dalam proyek ini proses *replacement* dilakukan untuk menjaga kualitas dan operabilitas dari *pipeline* yang digunakan. *Pipeline* beroperasi sebagai jalur utama untuk mengantarkan hasil produksi minyak dari platform BG, BL, BM dan BNA yang terletak di area Bravo. Total produksi yang mengalir di dalam jalur *pipeline* ini kira-kira berkisar 60% dari total produksi minyak di area Bravo. Berikut pada Gambar 4.1 adalah *layout* jalur *pipeline* di BG-BC platform,

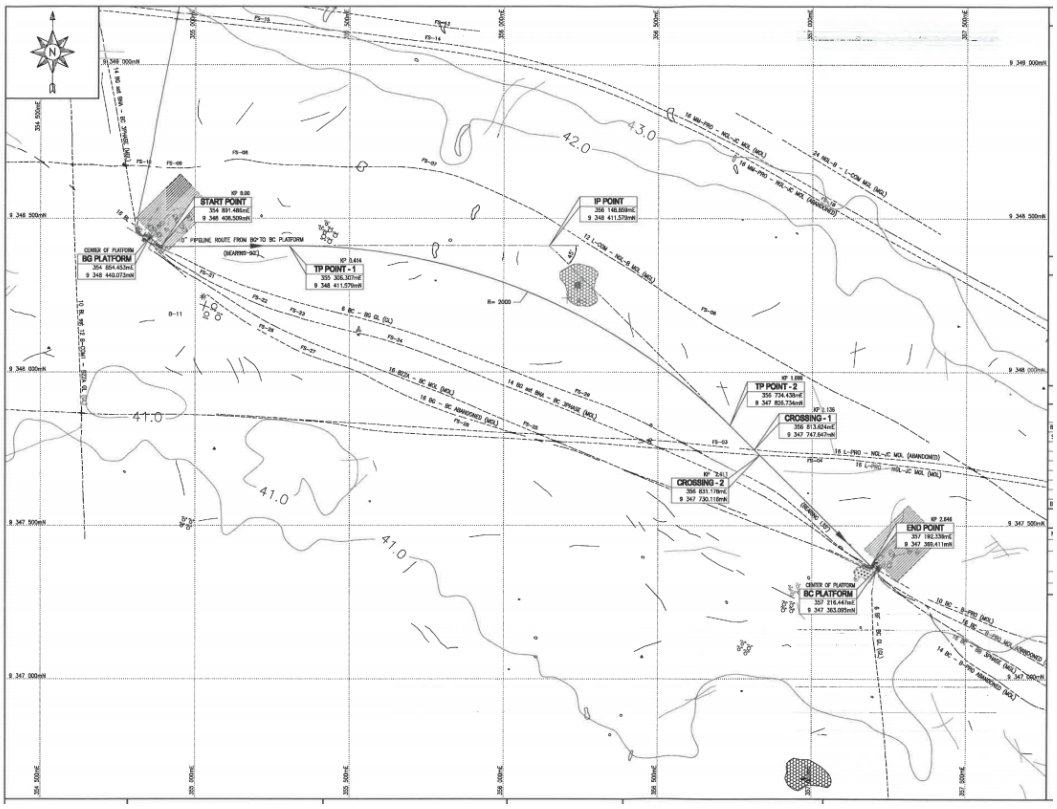

Gambar 4.1. Layout *Pipeline Replacement* pada *platform* BG-BC

Selanjutnya, dalam penelitian ini akan dilakukan analisis tegangan dan regangan pada proses *initiation* dan *laydown* saat instalasi dengan metode S-Lay dengan pipa berukuran 10 inch yang akan diletakkan di dasar laut dengan

bantuan *laybarge* DLB 01. Data-data yang digunakan dalam analisis ini yaitu, data *pipeline*, data *coating*, data *laybarge* DLB 01, data konfigurasi roller pada *barge* dan *stinger*, dan data lingkungan. Data-data tersebut dapat dilihat pada Tabel 4.1 – 4.10 berikut:

4.1.1. Data Properti Pipa

Tabel 4.1. Data Properti Pipa

Parameter	Unit	10" BG - BC
Outer Diameter	mm	273.05
Wall Thickness	mm	12.7
Material	-	Carbon Steel, API 5L Grade X52
Seam	-	HF-ERW
Specified Minimum Yield Strength	MPa (psi)	360 (52200)
Specified Minimum Tensile Strength	MPa (psi)	460 (66700)
Steel Density	kg/m^3	7850
Young Modulus	MPa	2.07×10^5
Thermal Expansion Coefficient	$1/^oC$	1.1×10^{-5}
Poisson Ratio	-	0.3

4.1.2. Data Properti *Coating*

Tabel 4.2. Data Lapisan Anti Korosi

Parameter		Unit	Value
Corrosion Coating	Coating Material	-	Asphalt Enamel (AE) for Linepipe
	Temperature Service	°C(°F)	-40 (-40) – 70 (158)
	Minimum Thickness	mm (μm)	4 (4000) for AE
	Density	kg/m^3	1281.5
	Cut Back Length for Corrosion Coating at One Side of Field Joint	mm	150 ± 10

Table 4.3. Data Properti *Concrete Weight Coating*

Parameter		Unit	Value
Concrete Weight Coating	Cut Back Length for Concrete Coating at One Side of Field Joint	mm	300 ± 10
	Water Absorption during Operation	%- by weight	0
	Concrete Thickness	mm	40
	Concrete Coating Density	kg/m^3	3043.5

4.1.3. Data *Laybarge* DLB 01

Tabel 4.4. Data Properti *Laybarge* DLB 01

Description	Barge Parameters
Pipe Tension Machine Available	1 x 45MT (Stand by) and 1 x 68MT (Operating)
No. of Tensioners Available on the Barge	2
No. of Rollers on the Barge	7
Barge Roller Bed Length	3.0
Length of Tensioner	6.4 m
Hitch X-Location (w.r.t stern)	-1.884 m
Hitch Y-Location (w.r.t main deck)	-4.495 m
Barge Moulded Dimensions	Length = 121.9 m Breadth = 32.3 m Depth = 8.7 m
Draft AFT (During Laying)	5.73 m
Draft MEAN (During Laying)	5.20 m
Draft FWD (During Laying)	4.67 m
Barge Trim (During Laying)	0.5 deg
Roller Barge Capacity	400 kN

4.1.4. Data Properti *Stinger* dan *Roller* pada *Stinger*

Tabel 4.5. Data Properti *Stinger*

Description	Stinger Parameters
Stinger Type	Articulated Floating Stinger
No. of Stinger Sections	2
No. of Rollers on Stinger	5
Total Stinger Length	38.5 m
Roller Stinger Capacity	300 kN

Tabel 4.6. Data Letak *Roller* pada *Stinger*

Stinger Section	Hitch Selection		Sled Section		
Rollers	S1	S2	S3	S4	S5
Distance from Hitch (m)	5.593	14.737	62.592	73.400	76.518
Bottom of Pipe Elevation B.O.P (m)	1.105	1.089	1.089	1.089	0.638

Tabel 4.7. Data Letak *Roller* dan *Tension*

Rollers/Tensioners	R1	R2	R3	T1	R4	T2	R5	R6	R7
Distance from stern (m)	96.37	84.33	73.50	60.15	46.49	35.40	23.38	8.91	3.12
Bottom of Pipe Elevation (m)	2.600	2.350	2.120	1.754	1.330	1.040	0.454	-1.285	-2.372

4.1.5. Data Lingkungan

Tabel 4.8. Data Kedalaman Laut di *Platform* BG-BC

Parameter	Return Periods			
	BG (1-year)	BC (1-year)	BG (100-year)	BC (100-year)
Mean Sea Level (MSL)	42.06	42.67	42.06	42.67
Storm Tide (Surge)	0.02 (1)	0.02 (1)	0.07 (1)	0.07 (1)
High Astronomical Tide (HAT)	0.53 (1)	0.53 (1)	0.53 (1)	0.53 (1)
Water Depth (MSL + Surge + ½ HAT)	42.35	42.96	42.40	43.01

Tabel 4.9. Data Gelombang dan Arus

No.	Heading	Allowable Hs (Hmax) (m)	Peak Period (s)	Current Speed (m/s)
1	Stern	0.7 (1.30)	3.95	Surface = 0.70 m/s Mid = 0.39 m/s Seabed (above 1 m)= 0.33 m/s
2	Stern Quarter – Starboard	0.7 (1.30)	3.95	
3	Beam Starboard	0.8 (1.49)	4.22	
4	Bow Quarter – Starboard	0.7 (1.30)	3.95	
5	Bow	0.7 (1.30)	3.95	
6	Bow Quarter – Port	0.7 (1.30)	3.95	
7	Beam – Port	0.8 (1.49)	4.22	
8	Stern Quarter - Port	0.7 (1.30)	3.95	

Tabel 4.10. Data Tanah

Parameter	Unit	Value
		Offshore
Soil Type	-	Very Soft to Very Soft Clay
Undrained Shear Strength	kPa	2.0 – 6.0
Angle Of Friction	Deg	-
Submerged Soil Density	Kg/m^3	815.7

4.2. Analisis Respon Gerakan *Barge*

Untuk mengetahui respon gerakan dari *laybarge* yang digunakan, perlu dilakukan pemodelan *barge* menggunakan software MOSES (*Multi Operational Structural Engineering Simulator)* yang kemudian dari software tersebut akan dilakukan simulasi gerakan *barge* berdasarkan pengaruh gelombang acak di Bravo area.

4.2.1. Pemodelan *Barge*

Laybarge akan dimodelkan berdasarkan ukuran-ukuran utama yang telah tertera pada Tabel 4.4 serta mengacu pada *General Arrangement* dari *Laybarge DLB 01*. *Output* dari pemodelan ini adalah model 3 dimensi dan karakteristik hidrostatis dari *Laybarge DLB 01*. Gambar dibawah ini (Gambar 4.2 – 4.5) merupakan hasil pemodelan *Laybarge DLB 01* menggunakan software MOSES :

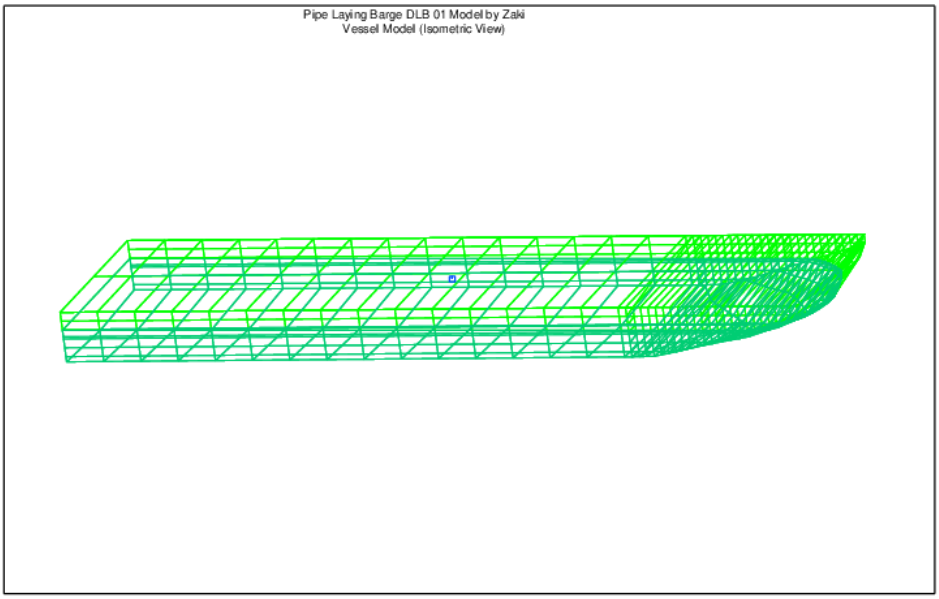

Gambar 4.2. Model *Laybarge* Tampak Isometri

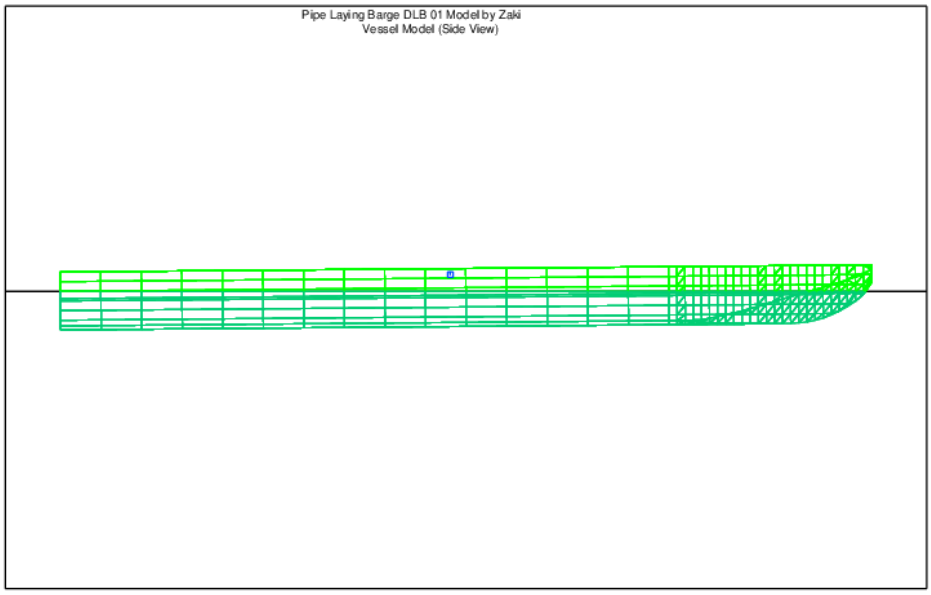

Gambar 4.3. Model *Laybarge* Tampak *Starboard*

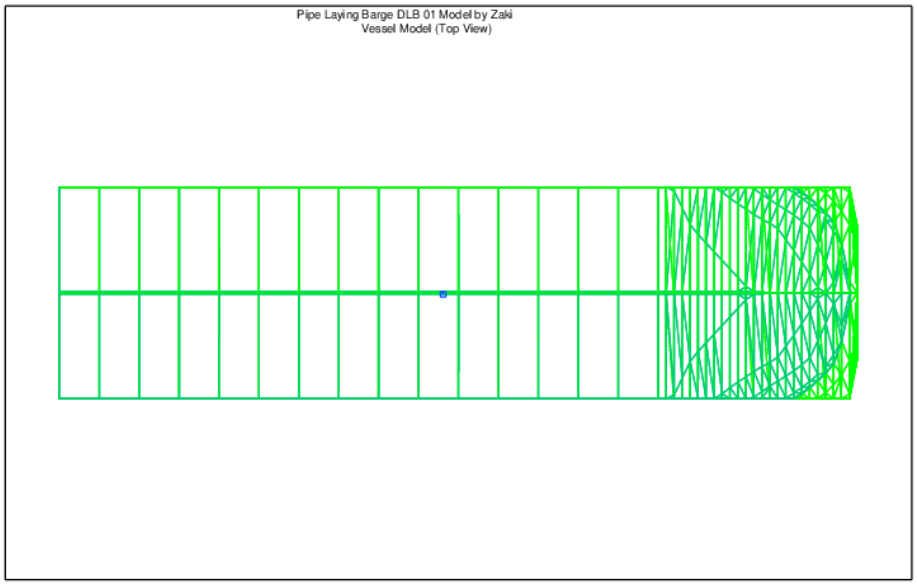

Gambar 4.4. Model *Laybarge* Tampak Atas

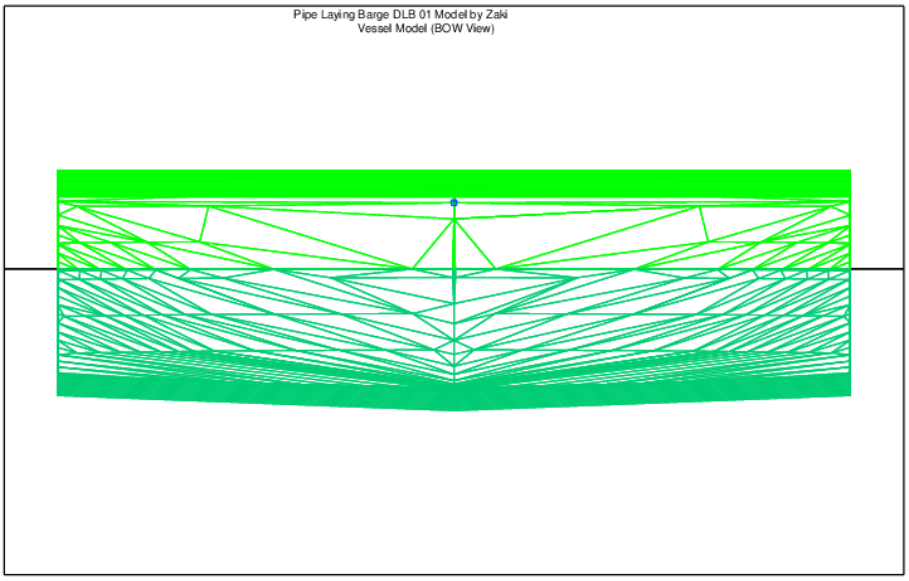

Gambar 4.5. Model *Laybarge* Tampak Depan

4.2.2. Validasi Model *Laybarge*

Sebelum analisis ini dilanjutkan ke perhitungan RAO (*Response Amplitude Operator*) model *laybarge* yang telah dimodelkan menggunakan MOSES harus terlebih dahulu divalidasi dengan parameter stabilitasnya. Validasi dilakukan dengan membandingkan parameter hasil pemodelan dari software MOSES dngan data yang ada. Kriteria validasi mengacu pada IACS (*International Association of Classification Societies*) dimana kriteria validasi untuk *displacement* bernilai 2% dan untuk parameter lain seperti

VCB, dan LCF maksimal 1%. Hasil output perhitungan karakteristik hidrostatis menggunakan *software* MOSES dilampirkan dalam Lampiran A dan validasi yang telah dilakukan dapat dilihat pada Tabel 4.11 dibawah ini,

Tabel 4.11. Validasi Model *Laybarge*

Parameter	Model	Data	Error (%)
Loa (m)	121.9	121.9	0.000
Breadth (m)	32.3	32.3	0.000
Draft (m)	4.7	4.7	0.000
Height (m)	8.7	8.7	0.000
Displacement (ton)	18501.11	18438.69	0.338
VCB (m)	2.84	2.84	0.000
LCF (m)	62.71	62.15	0.901

Berdasarkan data validasi yang telah dilakukan diatas dapat disimpulkan bahwa kriteria yang telah ditetapkan IACS telah dipenuhi sehingga model yang telah dibuat menggunakan *software* MOSES ini cukup untuk mewakili kapal sesungguhnya dan dapat digunakan untuk analisis selanjutnya.

4.2.3. Analisis Response Amplitude Operator *Laybarge*

Model *pipelaying barge* yang telah divalidasi kemudian dianalisis respon gerakannya akibat beban gelombang reguler. Analisis ini disebut dengan analisis RAO (*Response Amplitude Operator*). Sebelum melakukan analisis ini perlu diketahui terlebih dahulu letak titik berat yang akan digunakan sebagai *centre of motion* serta radius girasinya (kxx, kyy, kzz).

Nilai *centre of motion* dalam penelitian ini menggunakan data yang telah tersedia untuk masing-masing sumbu x, y, z secara berturut-turut 63.28, 0.00, 8. Sedangkan untuk nilai radius girasi dengan menggunakan rumus berikut :

$$K_{xx} = 0.34\ x\ B \tag{4.1}$$

$$K_{yy} = K_{zz} = 0.27\ x\ Lpp \tag{4.2}$$

Dari rumus diatas didapat nilai masing-masing kxx, kyy, kzz berturut-turut 10.38, 32.5, 32.5. Parameter-parameter tersebut diinputkan pada

software MOSES sehingga didapatkan besaran RAO dari model *laybarge*. Perhitungan RAO kali ini meninjau 6 derajat kebebasan (6 *Degree of Freedom*) yaitu gerakan *surge*, *sway*, *heave*, *roll*, *pitch*, dan, *yaw* dengan 5 arah pembebanan gelombang yaitu 0°, 45°, 90°, 135°, dan 180°. Hasil dari perhitungan RAO yang menggunakan bantuan *software* MOSES ini dapat dilihat pada Lampiran B.

4.2.3.1. Gerakan *Surge*

Hasil perhitungan RAO untuk gerakan *surge* dapat dilihat pada gambar 4.6. Dari perhitungan tersebut dapat diketahui bahwa gerakan *surge* hanya dipengaruhi oleh pembebanan gelombang dari arah 0°, 45°, 135°, dan 180° dan yang paling besar terjadi pada arah 0° dan 180° dengan nilai RAO berturut-turut sebesar 1,488 dan 1,417 pada frekuensi 0,1 rad/s. Sedangkan pada arah pembebanan 90° untuk gerakan *surge* nilai RAO paling besar yaitu 0,259 pada frekuensi 0,1 rad/s. Untuk arah pembebanan 45° dan 135° nilai RAO gerakan *surge* terbesar terjadi pada frekuensi 0,1 rad/s yaitu berturut-turut sebesar 1,099 dan 1,113. Grafik RAO gerakan *surge* tiap 5 arah pembebanan dapat dilihat pada Gambar 4.6 dibawah.

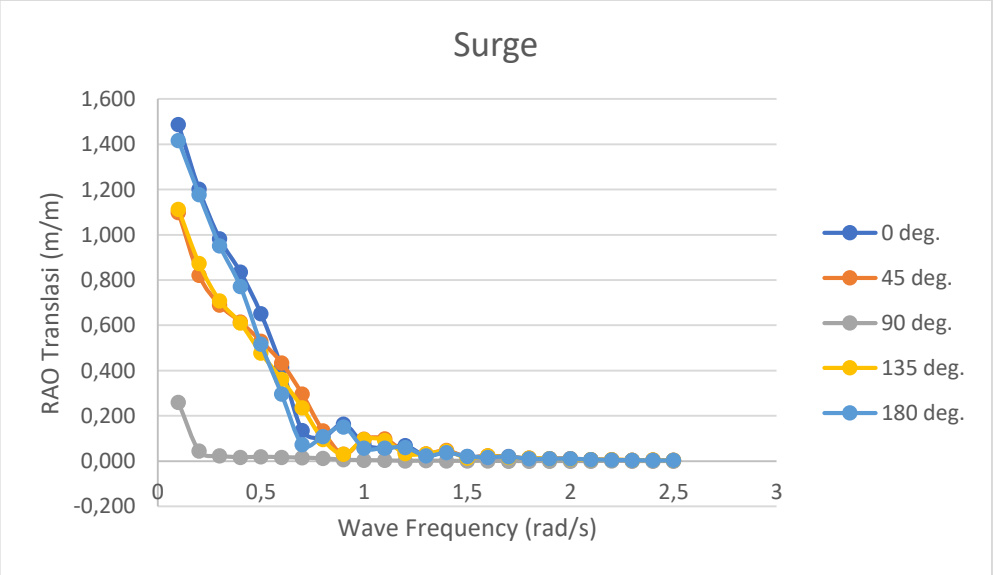

Gambar 4.6. Grafik RAO Gerakan *Surge*

4.2.3.2. Gerakan *Sway*

Gerakan *sway* merupakan gerakan translasi yang berporos pada sumbu y pada kapal atau sumbu yang sejajar dengan lebar kapal. Dari hasil analisis RAO untuk gerakan *sway* paling besar dipengaruhi oleh arah pembebanan 90° dengan nilai sebesar 1,186 dengan frekuensi 0,2 rad/s. Kemudian untuk arah pembebanan 0° dan 180° menghasilkan nilai RAO terbesar pada frekuensi 0,1 rad/s dengan nilai berturut-turut sebesar 0,042 dan 0,054 untuk gerakan *sway*. Sedangkan untuk arah pembebanan 45° dan 135° nilai RAO untuk gerakan *sway* paling besar terjadi pada frekuensi 0,2 rad/s dengan masing-masing sebesar 0,826 dan 0,841. Grafik RAO untuk gerakan *sway* pada tiap-tiap arah pembebanan dapat dilihat pada Gambar 4.7 dibawah ini.

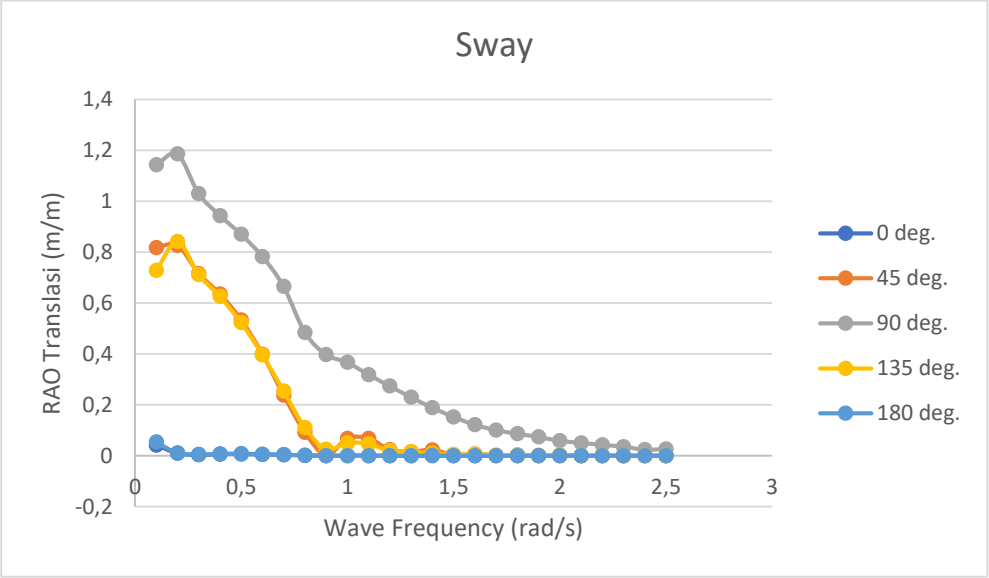

Gambar 4.7. Grafik RAO Gerakan *Sway*

4.2.3.3. Gerakan *Heave*

Gerakan heave adalah gerakan translasi naik turun dari struktur terapung yang disebabkan pengaruh eksitasi gelombang. Dari hasil analisis RAO yang telah dilakukan, diketahui bahwa gerakan *heave* paling besar dipengaruhi oleh arah pembebanan 90° dengan nilai RAO sebesar 1,043 pada frekuensi 0,7 rad/s. Pada arah 0° dan 180° nilai RAO yang terbesar terjadi pada frekuensi 0,1 rad/s dengan besaran RAO masing-masing sebesar 0,99 dan 1,006. Kemudian untuk arah pembebanan 45° dan 135° didapat nilai RAO berturut-turut sebesar 0,994 dan 1,005 yang terjadi pada

frekuensi 0,2 rad/s dan 0,1 rad/s. Grafik gerakan *heave* untuk tiap-tiap pembebanan dapat dilihat pada gambar 4.8 dibawah ini.

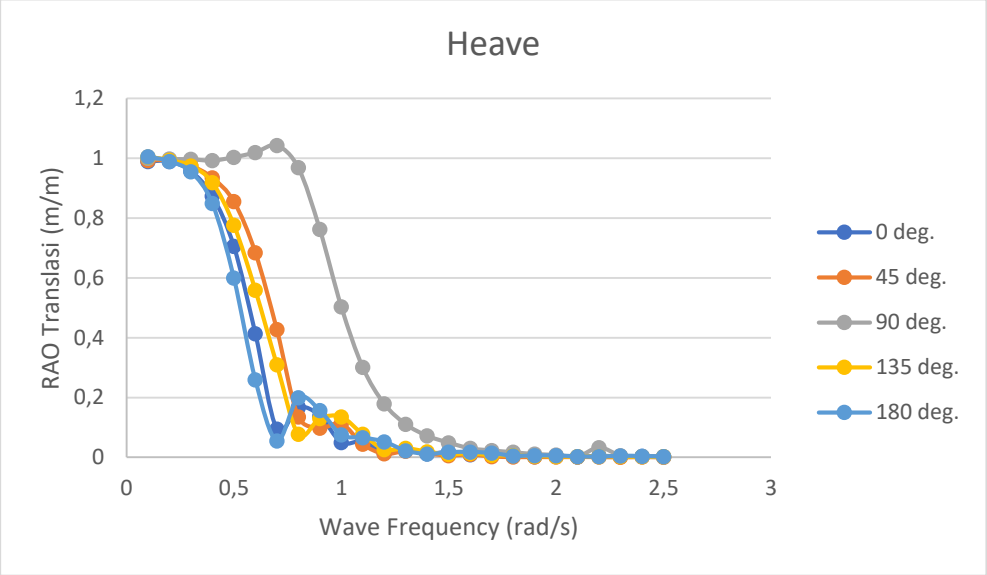

Gambar 4.8. Grafik RAO untuk Gerakan *Heave*

4.2.3.4. Gerakan *Roll*

Gerakan *roll* merupakan gerakan rotasi kapal secara menyamping atau bertumpu pada sumbu x kapal. Dari hasil perhitungan RAO, diketahui bahwa gerakan *roll* paling besar dipengaruhi oleh arah pembebanan 90° dengan nilai sebesar 4,836 yang terjadi pada frekuensi 0,8 rad/s. Kemudian pada arah pembebanan 45° dan 135° untuk gerakan *roll* terbesar masing-masing terjadi pada frekuensi 0,6 rad/s dan 0,7 rad/s dengan nilai RAO berturut-turut sebesar 0,95 dan 1,275. Lalu seperti yang tampak pada grafik dibawah bahwa pada arah pembebanan 0° dan 180° tidak menghasilkan nilai RAO untuk gerakan *roll*. Grafik RAO gerakan *roll* untuk tiap-tiap arah pembebanan dapat dilihat pada Gambar 4.9. dibawah,

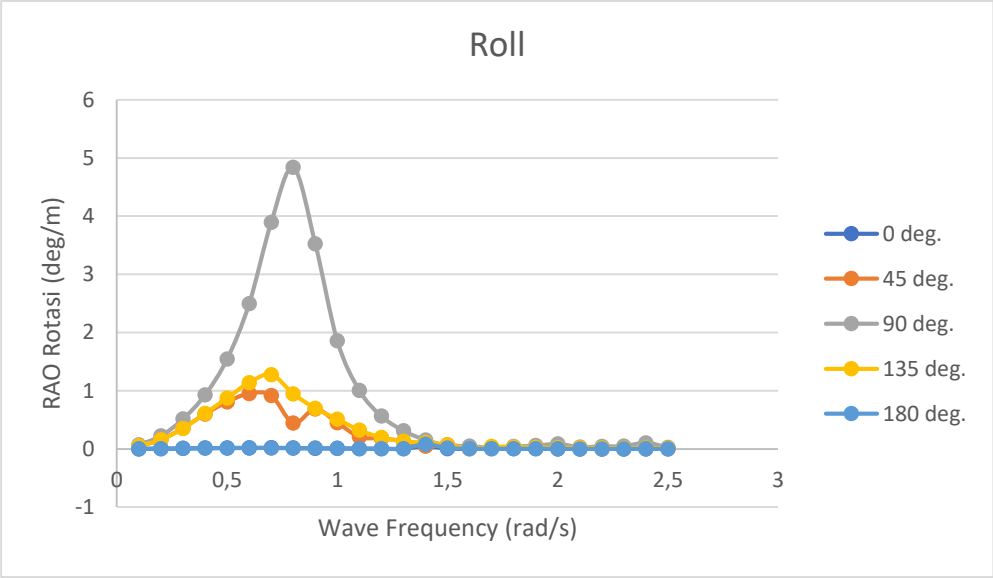

Gambar 4.9. Grafik RAO untuk Gerakan *Roll*

4.2.3.5.Gerakan *Pitch*

Gerakan *pitch* adalah gerakan rotasi yg bertumpu pada sumbu y atau sejajar dengan lebar kapal. Gerakan ini akan mengakibatkan bagian ujung kapal (*bow* dan *stern*) mengalami naik turun. Dari analisis yang telah dilakukan diketahui bahwa gerakan *pitch* paling besar dipengaruhi oleh arah pembebanan 0° dan 180° dengan nilai masing- masing sebesar 1,754 dan 1,858 yang terjadi pada frekuensi gelombang yang sama yaitu 0,5 rad/s. Lalu pada arah pembebanan 90° untuk gerakan *pitch* didapat nilai RAO terbesar yaitu 0,073 dengan nilai frekuensi sebesar 0,9 rad/s. Sedangkan pada arah pembebanan 45° dan 135° nilai RAO terbesar untuk gerakan *pitch* terjadi pada frekuensi 0,5 rad/s dengan nilai masing-masing sebesar 1,44 dan 1,535. Grafik RAO gerakan *pitch* untuk tiap-tiap arah pembebanan dapat dilihat pada Gambar 4.10. dibawah ini,

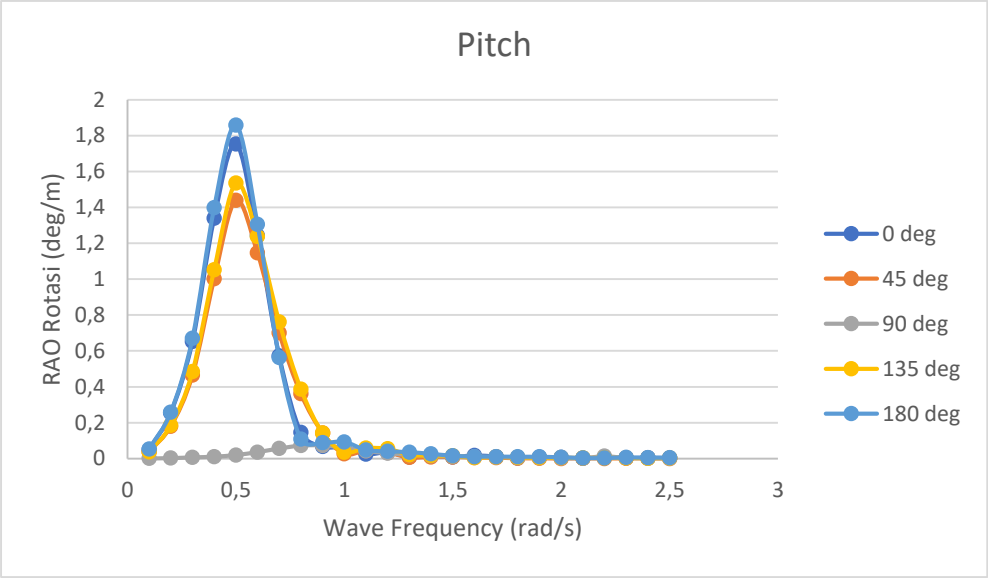

Gambar 4.10. Grafik RAO untuk Gerakan *Pitch*

4.2.3.6. Gerakan *Yaw*

Gerakan *yaw* adalah gerakan rotasi terhadap sumbu z kapal yaitu sumbu yang sejajar dengan tinggi kapal. Gerakan ini akan menyebabkan kapal mengalami putaran ke arah kanan atau kiri. Dari analisis yang telah dilakukan dapat dilihat bahwa gerakan *yaw* paling besar dipengaruhi oleh arah pembebanan 90° dengan nilai RAO sebesar 0,228 pada frekuensi sebesar 0,1 rad/s. Lalu pada arah pembebanan 45° dan 135° nilai RAO untuk gerakan *yaw* terbesar terjadi pada frekuensi gelombang 0,6 rad/s dengan nilai berturut-turut sebesar 0,163 dan 0,156. Sedangkan untuk arah pembebanan 0° dan 180° menghasilkan nilai RAO sebesar 0,048 dan 0,05 pada frekuensi gelombang 0,1 rad/s untuk gerakan *yaw*. Grafik RAO untuk gerakan *yaw* dapat dilihat pada Gambar 4.11.

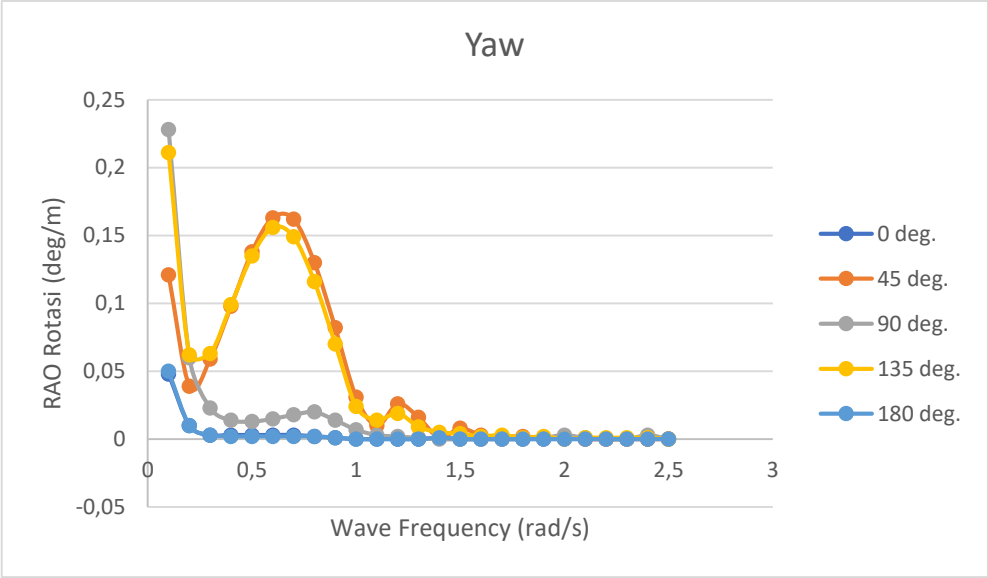

Gambar 4.11. Grafik RAO untuk Gerakan *Yaw*

4.2.4. Analisis respon gerakan *barge* terhadap gelombang acak

Dari parameter-parameter RAO yang telah didapat kita dapat mengetahui respon gerakan *barge* dengan menggunakan spektrum yang sesuai dengan kondisi laut aslinya. Dalam penelitian ini menggunakan spektrum JONSWAP untuk memodelkan kondisi gelombang. Adapun pemilihan spektrum JONSWAP sendiri adalah karena spektrum ini cocok untuk menggambarkn kondisi laut jawa yang merupakan perairan tertutup, atau kepulauan. Perhitungan spektrum JONSWAP didapat dengan menggunakan persamaan 2.2 dengan memasukkan data gelombang yang telah didapat. Hasil perhitungan spektrum JONSWAP untuk tiap-tiap arah pembebanan dapat dilihat pada Gambar 4.12 – 4.16 dibawah.

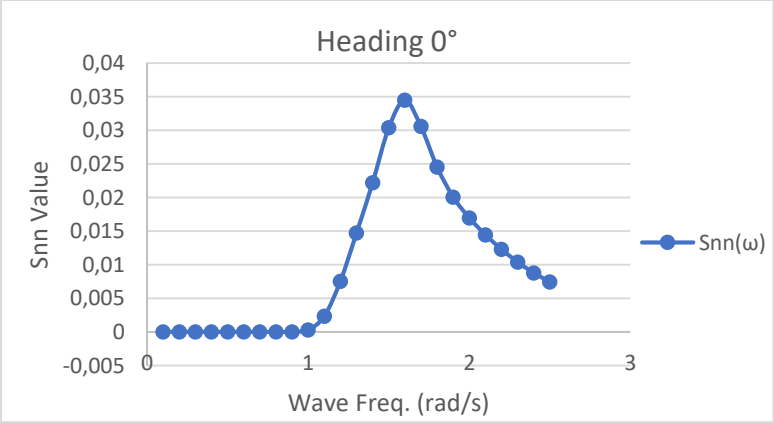

Gambar 4.12. Grafik Spektrum JONSWAP untuk arah 0

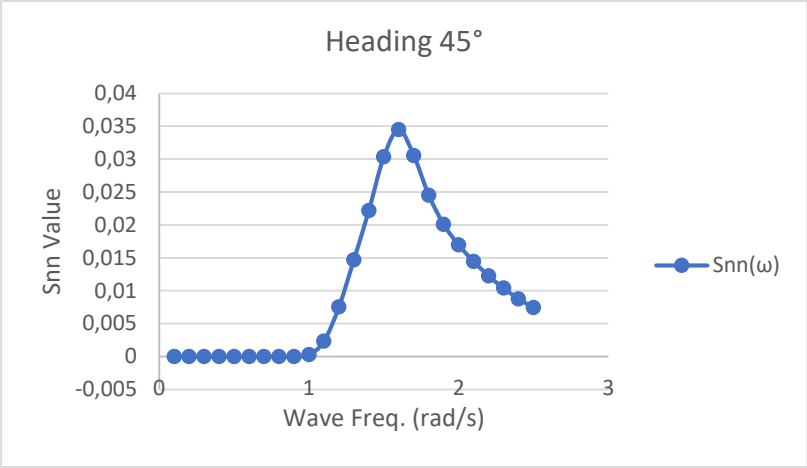

Gambar 4.13. Grafik Spektrum JONSWAP untuk arah 45°

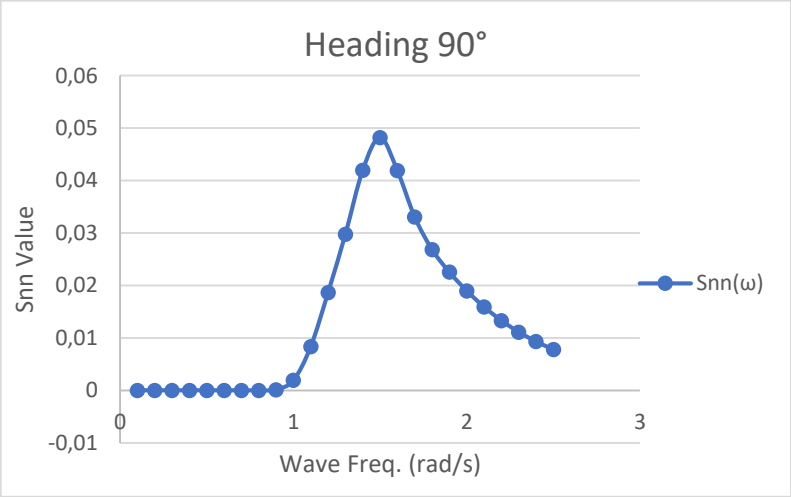

Gambar 4.14. Grafik Spektrum JONSWAP untuk arah 90°

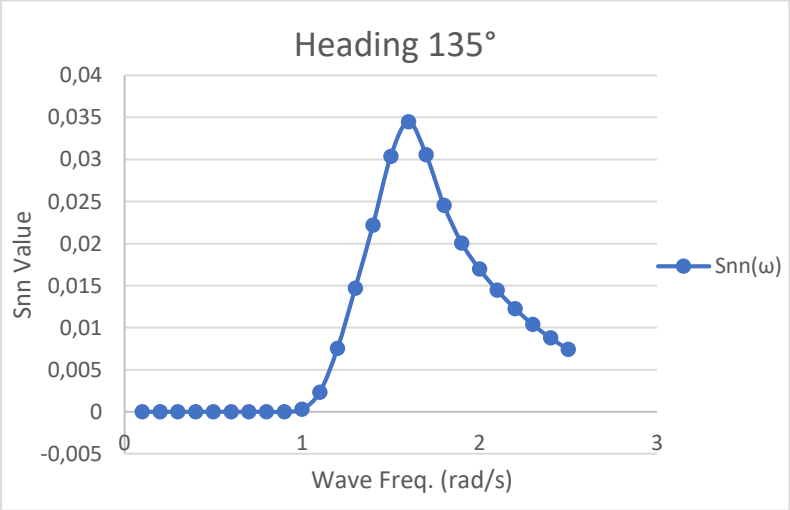

Gambar 4.15. Grafik Spektrum JONSWAP untuk arah 135°

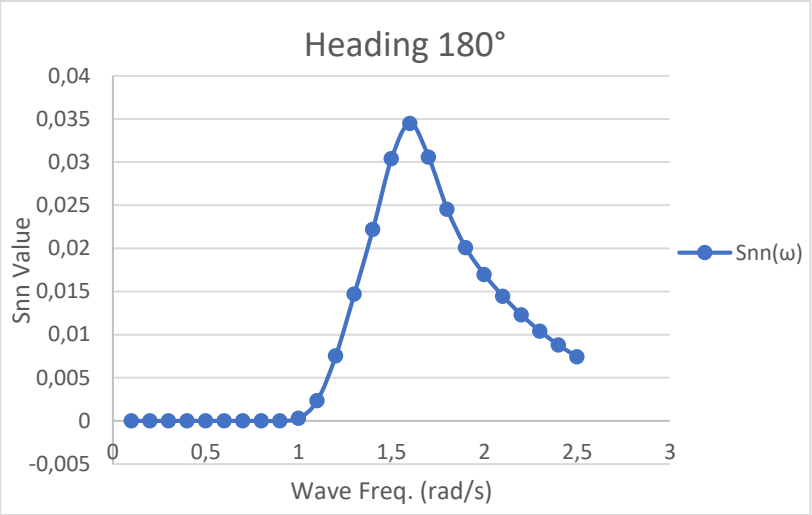

Gambar 4.16. Grafik Spektrum JONSWAP untuk arah 180°

Parameter JONSWAP diatas kemudian digunakan untuk menghitung spektra respon dari *laybarge* yang digunakan dengan menggunakan Persamaan 2.3. Selanjutnya untuk mengetahui tinggi respon struktur terhadap gelombang acak perlu dilakukan analisis spektral dengan mengalikan spektra respon ($S_r(\omega)$) dengan parameter seperti SM, ω, ω^2, dan ω^4 untuk mendapatkan nilai m_0, m_1, m_2, dan m_4 seperti pada Tabel 4.12 dibawah ini,

Tabel 4.12. Perhitungan spektra respon *surge* untuk arah pembebanan 0°

ω	σ	Snn(ω)	SM	RAO Surge	RAO^2	Sr(ω)	Sr(ω)*SM	ω*Sr(ω)*SM	$ω^2$*Sr(ω)*SM	$ω^4$*Sr(ω)*SM
0,1	0,07	0	1	1,488	2,21414	0	0	0	0	0
0,2	0,07	0	4	1,201	1,4424	0	0	0	0	0
0,3	0,07	0	2	0,982	0,96432	0	0	0	0	0
0,4	0,07	1,5E-134	4	0,836	0,6989	1E-134	4,1818E-134	6,6909E-134	6,6909E-135	1,0705E-135
0,5	0,07	7,01E-55	2	0,651	0,4238	2,97E-55	5,93949E-55	5,93949E-55	1,48487E-55	3,71218E-56
0,6	0,07	1,74E-26	4	0,415	0,17223	3E-27	1,2001E-26	2,88023E-26	4,32034E-27	1,55532E-27
0,7	0,07	1,77E-14	2	0,135	0,01823	3,23E-16	6,459E-16	9,04259E-16	3,16491E-16	1,5508E-16
0,8	0,07	8,89E-09	4	0,105	0,01103	9,8E-11	3,91895E-10	1,25406E-09	2,50813E-10	1,6052E-10
0,9	0,07	7,6E-06	2	0,164	0,0269	2,04E-07	4,08924E-07	7,36063E-07	3,31228E-07	2,68295E-07
1	0,07	0,000298	4	0,075	0,00563	1,67E-06	6,69984E-06	2,67994E-05	6,69984E-06	6,69984E-06
1,1	0,07	0,002337	2	0,056	0,00314	7,33E-06	1,46568E-05	3,22451E-05	1,77348E-05	2,14591E-05
1,2	0,07	0,007546	4	0,068	0,00462	3,49E-05	0,000139576	0,000669967	0,00020099	0,000289426
1,3	0,07	0,014705	2	0,024	0,00058	8,47E-06	1,69396E-05	4,4043E-05	2,8628E-05	4,83813E-05
1,4	0,07	0,022194	4	0,041	0,00168	3,73E-05	0,00014923	0,000835689	0,000292491	0,000573283
1,5	0,07	0,030368	2	0,02	0,0004	1,21E-05	2,42946E-05	7,28839E-05	5,46629E-05	0,000122992
1,6	0,09	0,034474	4	0,021	0,00044	1,52E-05	6,08119E-05	0,000389196	0,000155679	0,000398537
1,7	0,09	0,030558	2	0,02	0,0004	1,22E-05	2,4446E-05	8,31165E-05	7,0649E-05	0,000204176
1,8	0,09	0,024537	4	0,01	0,0001	2,45E-06	9,81487E-06	7,0667E-05	3,18002E-05	0,000103033
1,9	0,09	0,020067	2	0,011	0,00012	2,43E-06	4,85618E-06	1,84535E-05	1,75308E-05	6,32863E-05
2	0,09	0,016959	4	0,011	0,00012	2,05E-06	8,20837E-06	6,5667E-05	3,28335E-05	0,000131334
2,1	0,09	0,014451	2	0,007	4,9E-05	7,08E-07	1,41617E-06	5,94791E-06	6,24531E-06	2,75418E-05
2,2	0,09	0,012274	4	0,005	2,5E-05	3,07E-07	1,22739E-06	1,08011E-05	5,94058E-06	2,87524E-05
2,3	0,09	0,01039	2	0,004	1,6E-05	1,66E-07	3,32476E-07	1,52939E-06	1,7588E-06	9,30405E-06
2,4	0,09	0,008783	4	0,004	1,6E-05	1,41E-07	5,62101E-07	5,39617E-06	3,2377E-06	1,86492E-05
2,5	0,09	0,007426	1	0,003	9E-06	6,68E-08	6,68367E-08	1,67092E-07	4,17729E-07	2,61081E-06
	m0=	1,55E-05				Σ	0,000463549	0,002333307	0,00092763	0,002049733
	m1=	7,78E-05								
	m2=	3,09E-05								
	m4=	6,83E-05								

Untuk menghitung besaran amplitudo respon struktur akibat pengaruh gelombang acak pada tiap derajat kebebasan dapat menggunakan Persamaan 2.8-2.10 dengan memasukkan momen yang telah didapat dari Tabel 4.12 diatas. Kemudian untuk seterusnya dihitung untuk tiap derajat kebebasan berdasarkan arah pembebanan yang ditentukan. Dalam penelitian ini, penulis menggunakan *software* MOSES untuk menghitung besarnya amplitudo respon struktur. Hasil perhitungan amplitudo respon struktur dapat dilihat pada Tabel 4.13 - 4.17 dibawah ini,

Tabel 4.13. Amplitudo respon gerakan *laybarge* untuk arah 0°

Heading 0 deg.						
Single Amplitude Motions	Surge (m)	Sway (m)	Heave (m)	Roll (deg)	Pitch (deg)	Yaw (deg)
Root Mean Square	0,002	0,000	0,001	0,002	0,001	0,000
Ave of 1/3 Highest	0,005	0,000	0,003	0,003	0,002	0,000
Ave of 1/10 Highest	0,006	0,000	0,003	0,004	0,003	0,000
Maximum	0,008	0,000	0,005	0,006	0,004	0,000

Tabel 4.14. Amplitudo respon gerakan *laybarge* untuk arah 45°

Heading 45 deg.						
Single Amplitude Motions	Surge (m)	Sway (m)	Heave (m)	Roll (deg)	Pitch (deg)	Yaw (deg)
Root Mean Square	0,003	0,001	0,001	0,006	0,001	0,001
Ave of 1/3 Highest	0,005	0,003	0,002	0,012	0,002	0,002
Ave of 1/10 Highest	0,006	0,003	0,003	0,015	0,002	0,002
Maximum	0,009	0,005	0,004	0,022	0,004	0,003

Tabel 4.15. Amplitudo respon gerakan *laybarge* untuk arah 90°

Heading 90 deg,						
Single Amplitude Motions	Surge (m)	Sway (m)	Heave (m)	Roll (deg)	Pitch (deg)	Yaw (deg)
Root Mean Square	0,000	0,012	0,007	0,020	0,001	0,000
Ave of 1/3 Highest	0,000	0,024	0,013	0,039	0,003	0,000
Ave of 1/10 Highest	0,000	0,031	0,016	0,050	0,003	0,000
Maximum	0,001	0,045	0,024	0,072	0,004	0,001

Tabel 4.16. Amplitudo respon gerakan *laybarge* untuk arah 135°

Heading 135 deg						
Single Amplitude Motions	Surge (m)	Sway (m)	Heave (m)	Roll (deg)	Pitch (deg)	Yaw (deg)
Root Mean Square	0,002	0,001	0,002	0,008	0,002	0,001
Ave of 1/3 Highest	0,004	0,002	0,003	0,015	0,003	0,001
Ave of 1/10 Highest	0,006	0,002	0,004	0,019	0,004	0,001
Maximum	0,008	0,003	0,006	0,027	0,006	0,002

Tabel 4.17. Amplitudo respon gerakan *laybarge* untuk arah 180°

Heading 180 deg						
Single Amplitude Motions	Surge (m)	Sway (m)	Heave (m)	Roll (deg)	Pitch (deg)	Yaw (deg)
Root Mean Square	0,002	0,000	0,002	0,003	0,002	0,000
Ave of 1/3 Highest	0,004	0,000	0,003	0,005	0,004	0,000
Ave of 1/10 Highest	0,005	0,000	0,004	0,006	0,004	0,000
Maximum	0,008	0,000	0,006	0,009	0,006	0,000

Dari hasil analisis spektra juga dapat diketahui besaran *zero up crossing period* untuk menentukan apakah respon dari *barge* terhadap gelombang acak dengan tinggi gelombang signifikan berkisar 0,7 – 0,8 m aman untuk melakukan proses instalasi pipa. Kriteria ini dapat diketahui dengan mengacu pada standar DNV OS H101 pada Sec 3 C800 seperti yang sudah dijelaskan sub bab 2.2.15 yang kemudian menggunakan Persamaan 2.44. Dari persamaan tersebut dapat diketahui kisaran dari besaran *zero up crossing period* untuk tinggi gelombang 0,7 – 0,8 m seperti pada perhitungan dibawah ini

$$8{,}9 \cdot \sqrt{\frac{Hs}{g}} \leq T_z \leq 13$$

$$8{,}9 \cdot \sqrt{\frac{0{,}7}{9{,}81}} \leq T_z \leq 13$$

$$2{,}37 \leq T_z \leq 13\ ; untuk\ H_s\ sebesar\ 0{,}7\ m$$

$$8{,}9 \cdot \sqrt{\frac{0{,}8}{9{,}81}} \leq T_z \leq 13$$

$$2{,}54 \leq T_z \leq 13\ ; untuk\ H_s\ sebesar\ 0{,}8\ m$$

Hasil perhitungan *zero up crossing period* yang didapat dengan menggunakan Persamaan 2.45 untuk tiap arah pembebanan dan 6 derajat kebebasan dari *barge* bisa dilihat pada Tabel 4.18 dibawah ini

Tabel 4.18. Hasil Perhitungan *Zero Up Crossing Period*

Zero Up Crossing Period (sec)					
Parameter	Heading 0°	Heading 45°	Heading 90°	Heading 135°	Heading 180°
Surge	4,44	4,38	4,56	4,35	4,44
Sway	4,55	4,79	4,52	4,72	4,50
Heave	4,37	4,78	5,23	4,72	4,54
Roll	4,48	4,88	5,44	4,78	4,48
Pitch	4,29	4,91	4,67	4,78	4,48
Yaw	4,49	4,91	3,63	4,87	4,49
Range Tz	2,37 ≤ Tz ≤ 13	2,37 ≤ Tz ≤ 13	2,54 ≤ Tz ≤ 13	2,37 ≤ Tz ≤ 13	2,37 ≤ Tz ≤ 13
Information	OK	OK	OK	OK	OK

Dari tabel diatas dapat diketahui bahwa rentang harga dari *zero up crossing period* telah memenuhi kriteria yang telah ditetapkan oleh DNV OS H101.

Kemudian dapat ditentukan juga kriteria tinggi gelombang maksimum yang diperbolehkan untuk dilakukan proses instalasi pada kondisi *weather restricted* menggunakan standar DNV OS H101. Kriteria tersebut dapat dilihat pada Persamaan 2.43. Dari persamaan tersebut dikatakan bahwa tinggi gelombang maksimum akan sama dengan 2 kali tinggi gelombang signifikan. Maka, tinggi gelombang maksimum yang diperbolehkan terjadi saat *laying* adalah seperti berikut,

Untuk Arah pembebanan 0°, 45°, 135°, dan 180°

$H_{max} = STR \cdot H_s$

$= 2 \cdot 0{,}7$ m

$= 1{,}4$ m

Untuk Arah pembebanan 90°

$H_{max} = STR \cdot H_s$

$= 2 \cdot 0{,}8$ m

$= 1{,}6$ m

∴ agar dapat dilakukan proses instalasi nilai tinggi gelombang maksimum untuk arah pembebanan 0°, 45°, 135°, dan 180° tidak boleh melebihi 1,4 m, sedangkan untuk arah pembebanan 90° tidak boleh melebihi 1,6 m.

4.3. Perhitungan properti berat pipa

Seperti yang telah dijelaskan sebelumnya pada sub bab 2.2.13 bahwa untuk menghitung besaran tension yang dibutuhkan, diperlukan parameter berat pipa yang terendam. Langkah-langkah menghitung berat properti pipa juga dapat mengikuti persamaan-persamaan yang telah disebutkan pada sub bab 2.2.13. Adapun perhitungan berat properti pipa dengan data yang tersedia pada sub bab 4.1 adalah seperti berikut ini,

Diketahui :

OD = 0,27305 m	ρ_{st} = 7850 kg/m^3
WT = 0,0127 m	t_{conc} = 0,04 m
ρ_{conc} = 3043,5 kg/m^3	t_{cc} = 0,004 m
ρ_{cc} = 1281,5 kg/m^3	ξ = 5
ρ_w = 1025 kg/m^3	L_{cb} = 0,3 m
C_b = 0	ρ_{fj} = 1025 kg/m^3
L_j = 12,2 m	t_{fj} = 0,04 m

Jawab :

Pipe Diameter Calculation

$D_i = OD - 2 \cdot WT$	=	0,24765 m
$D_{cc} = OD + 2 \cdot t_{cc}$	=	0,28105 m
$D_{conc} = D_{cc} + 2 \cdot t_{conc}$	=	0,36105 m
$D_{fj} = OD + 2 \cdot t_{cc} + 2 \cdot t_{fj}$	=	0,36105 m

Weight Calculation

$W_{st} = \frac{\pi}{4} \cdot (OD^2 - D_i^2) \cdot \rho_{st}$	=	81,54190107	kg/m	Berat baja
$W_{cc} = \frac{\pi}{4} \cdot (D_{cc}^2 - OD^2) \cdot \rho_{CC}$	=	4,461558882	kg/m	Berat anti korosi
$V_{conc} = \frac{\pi}{4} \cdot (D_{conc}^2 - D_{CC}^2)$	=	0,040344333	m^2	Volume *concrete*
$W_{conc} = V_{conc} \cdot \rho_{conc}$	=	122,7879771	kg/m	Berat *concrete*
$B = \frac{\pi}{4} \cdot D_{conc}^2 \cdot \rho_w$	=	104,9417846	kg/m	Bouyancy pipa

Menghitung berat total pipa saat di darat dan terendam

$W_1 = W_{st} \cdot L_j + (W_{cc} + W_{conc}) \cdot (L_j - 2 \cdot L_{cb})$	=	2470,90581	
$W_2 = \rho_{fj} \cdot [\pi \cdot L_{cb} \cdot \frac{D_{fj}^2 - OD^2}{2} + 2 \cdot \pi \cdot C_b \cdot (t_{fj})^2 \cdot [\frac{OD}{2} + (t_{fj}) \cdot \frac{2}{3}]]$	=	26,95289519	
$W_3 = -2 \cdot \pi \cdot \rho_{conc} \cdot C_b \cdot t_{conc}^2 \cdot (\frac{Dcc}{2} + \frac{tconc}{2})$	=	0,00000	
$W_{air} = \frac{(W1+W2+W3)}{Lj}$	=	204,7425168	kg/m
$W_{sa} = W_{air} + \frac{\xi}{100} \cdot V_{conc} \cdot \rho_w - B$	=	101,8683793	kg/m

4.4. Analisis besaran *tension* yang digunakan berdasarkan berat pipa terendam

Tension diperlukan pada saat proses penurunan pipa agar tegangan yang terjadi saat instalasi pipa tidak melebihi dari yang diatur oleh standar. Seperti yang sudah dijelaskan pada sub bab 2.2.14, bahwa besaran *lay tension* yang diberikan saat instalasi pipa tergantung dari berat total pipa tercelup dan secara otomatis juga tergantung pada kedalaman perairan. Dalam melakukan analisis ini menggunakan formula yang sudah dijelaskan pad sub bab 2.2.10 yang merujuk pada literatur *Subsea Pipeline Design, Analysis, and Installation*. Berikut adalah perhitungan yang dilakukan untuk menentukan besaran *tension* yang akan digunakan saat proses *initiation* dan *laydown*.

Initiation

Diketahui:

- Panjang *joint* pipa dari roller 1 ke roller 5 = 80 m
- Panjang *catenary* dari roller 1 ke seabed = 280 m
- Panjang *joint* pipa dari roller 1 ke roller 7 = 100 m
- Berat pipa di darat (w_{air}) = 204,742 kg/m = 2007,838 N/m
- Berat pipa di laut (w_{sa}) = 101,8683793 kg/m = 998,9875 N/m
- Berat *wire rope* di darat (w_w)= 11 kg/m = 107,873 N/m
- Berat *wire rope* di laut (w_{sw}) = 8,823 kg/m = 86,525 N/m
- Radius curvature yang digunakan = 200 m

Jawab:

Langkah 1

Menghitung panjang *wire rope* yang digunakan

Diketahui bahwa panjang *wire rope* yang digunakan sama dengan panjang *catenary* pipa saat *laying* dikurangi panjang *joint* pipa dari roller 1 ke roller 5

$L_w = L_{all} – L_{PR5}$

$= 280 \text{ m} - 80 \text{ m}$

$= 200 \text{ m}$

Langkah 2

Menentukan panjang *wire rope* yang terendam

Berdasarkan gambar GA dari barge DLB 01 diketahui bahwa sarat air yang digunakan saat *laying* akan sejajar dengan letak roller 7 pada barge tersebut, yang artinya bahwa panjang *wire rope* yang terendam sama dengan panjang *wire rope* yang digunakan dikurangi panjang roller 5 ke roller 7

$L_{sw} = L_w – (L_{PR7} – L_{PR5})$

$= 200 \text{ m} – (100 \text{ m} – 80 \text{ m})$

$= 180 \text{ m}$

Langkah 3

Menghitung panjang pipa yang terendam

Pada kasus ini panjang pipa yang terendam masih bernilai 0 dikarenakan *joint* pipa masih berada di roller 5. Namun untuk kasus selanjutnya panjang pipa yang terendam dapat dihitung dengan mengasumsikan panjang *wire rope* yang terendam ketika ujung pipa berada di roller 7 (hasil perhitungan langkah 2) dikurangi panjang *wire rope* saat kasus itu, dimana roller 7 merupakan titik dimana permukaan laut berada. Perhitungan dibawah ini adalah contoh kasus saat ujung pipa berada di roller pertama dari *stinger*.

$L_{sa} = L_{sw7} - L_{sw}$

$= 180 \text{ m} – 170 \text{ m}$

$= 10 \text{ m}$

Langkah 4

Dengan menggunakan persamaan 2.18 dapat diketahui besaran komponen vertikal dari tension pada pipa saat instalasi

$T_v = w_s \cdot s$

$= w_{sa} \cdot L_{sa} + w_{sw} \cdot L_{sw}$

$= 998{,}9875 \text{ N/m} \cdot 0 \text{ m} + 86{,}525 \text{ N/m} \cdot 180 \text{ m}$

$= 0 + 15574 \text{ N}$

$= 15{,}574 \text{ kN}$

Langkah 5

Menghitung besaran komponen horizontal dari tension pipa saat instalasi

Diketahui dari persamaan 2.42 bahwa

$T_h = R_{cv} \cdot ((w_{sa} \cdot L_{sa} + w_{sw} \cdot L_{sw}) / L_{cat})$

$= 200 \text{ m} \cdot ((998{,}9875 \text{ N/m} \cdot 0 \text{ m} + 86{,}525 \text{ N/m} \cdot 180 \text{ m}) / 180 \text{ m})$

$= 17{,}305 \text{ kN}$

Langkah 6

Menghitung besaran tension yang dibutuhkan oleh pipa

Perhitungan dilakukan dengan mengasumsikan gaya vertikal dan gaya horizontal sebagai gaya yang tegak lurus satu sama lain, sedangkan besaran *tension* yang dibutuhkan merupakan resultan gaya dari kedua gaya tersebut yang dapat dihitung dengan menggunakan rumus

$T = \sqrt{(Tv^2 + Th^2)}$

$= \sqrt{((15{,}574)^2 + (17{,}305\ kN)^2)}$

$= 23{,}281\ kN$

Kasus selanjutnya dapat dihitung dengan mengulangi langkah 1 sampai 6 yang hasilnya dapat dilihat pada Tabel 4.19

Tabel 4.19. Hasil Perhitungan besaran *tension* yang dibutuhkan untuk tahap *initiation*

Initiation Process Applied Tension Analysis									
Step	Barge Move Forward (m)	Length of pipe start at R#1 (m)	Pulling Head Position	Length of Wire Rope start at R#5	Length of Submerged Wire Rope start at R#7 (sea level)	Length of Submerged Pipe start at R#7 (sea level)	Vertical Tension/Tv (kN)	Horizontal Tension/Th (kN)	Applied Tension/T (kN)
1	-	80	R5	200	180	0	15,57466931	17,30518813	23,28174951
2	10	90	R6	190	180	0	15,57466931	17,30518813	23,28174951
3	10	100	R7	180	180	0	15,57466931	17,30518813	23,28174951
4	10	110	S1	170	170	10	24,69928532	27,44365036	36,92165544
5	10	120	S2	160	160	20	33,82390133	37,58211259	50,56156137
6	10	130	S3	150	150	30	42,94851734	47,72057482	64,20146729
7	7	137	S4	143	143	37	49,33574854	54,81749838	73,74940144
8	3	140	Stinger Tip	140	140	40	52,07313335	57,85903705	77,84137322
9	10	150	36,43 m from seabed	130	130	50	61,19774936	67,99749928	91,48127915
10	70	220	18,42 m from seabed	60	60	120	125,0700614	138,9667349	186,9606206
11	50	270	0,9	10	10	170	170,6931415	189,6590461	255,1601503
12	10	280	0	0	0	180	179,8177575	199,7975083	268,8000562

Laydown

Sudah dijelaskan sebelumnya bahwa *laydown* adalah tahapan akhir pada instalasi pipa laut dengan *pipeline* diturunkan dari barge ke atas seabed dengan menggunakan *cable*. Pada tahap ini juga diperlukan besaran *tension* yang bervariasi agar besara *tension* yang digunakan efektif atau sesuai dengan kebutuhannya. Perhitungan pada tahap ini menggunakan formula yang sama dengan tahapan *initiation* namun dengan data yang berbeda.

Diketahui:

- Panjang *cable* dari roller 1 ke roller 5 (L_{CR5}) = 57 m
- Panjang *catenary* dari roller 1 ke seabed (L_{all}) = 300 m
- Panjang *cable* dari roller 1 ke roller 7 (L_{CR7}) = 90 m
- Berat pipa di darat (w_{air}) = 204,742 kg/m = 2007,838 N/m
- Berat pipa di laut (w_{sa}) = 101,8683793 kg/m = 998,9875 N/m
- Berat *wire rope* di darat (w_w)= 11 kg/m = 107,873 N/m
- Berat *wire rope* di laut (w_{sw}) = 8,823 kg/m = 86,525 N/m
- Radius Curvature yang digunakan = 200 m

Jawab:

Langkah 1

Menghitung panjang *joint* pipa yang tersedia

Dikarenakan proses *laydown* merupakan penurunan pipa dari *barge* ke *seabed* yang berarti sebagian *joint* pipa sudah berada di laut. Karena itu, perhitungan yang dilakukan menggunakan formula yang sama namun dengan variabel yang berbeda.

$L_p = L_{all} – L_{CR5}$

$= 300 \text{ m} - 57 \text{ m}$

$= 243 \text{ m}$

Langkah 2

Menentukan panjang pipa yang terendam

$L_{sa} = L_p – (L_{CR7} – L_{CR5})$

$= 243 \text{ m} – (90 \text{ m} – 57 \text{ m})$

$= 210 \text{ m}$

Langkah 3

Menghitung panjang *cable* yang terendam

Pada kasus ini panjang pipa yang terendam masih bernilai 0 dikarenakan *cable* masih berada di roller 5. Namun untuk kasus selanjutnya panjang pipa yang terendam dapat dihitung dengan mengasumsikan panjang *joint* pipa yang terendam ketika ujung *cable* berada di roller 7 (hasil perhitungan langkah 2) dikurangi panjang *joint* pipa saat kasus itu, dimana roller 7 merupakan titik dimana permukaan laut berada. Perhitungan dibawah ini adalah contoh kasus saat ujung *cable* berada di roller pertama dari *stinger*.

$L_{sw} = L_{sw7} - L_{sa}$

$= 210 \text{ m} – 200 \text{ m}$

$= 10 \text{ m}$

Langkah 4

Dengan menggunakan persamaan 2.18 dapat diketahui besaran komponen vertikal dari tension pada pipa saat instalasi

$T_v = w_s \cdot s$

$= w_{sa} \cdot L_{sa} + w_{sw} \cdot L_{sw}$

$= 998{,}9875 \text{ N/m} \cdot 0 \text{ m} + 86{,}525 \text{ N/m} \cdot 210 \text{ m}$

$= 0 + 209787 \text{ N}$

$= 209{,}787 \text{ kN}$

Langkah 5

Menghitung besaran komponen horizontal dari tension pipa saat instalasi

Diketahui dari persamaan 2.20 bahwa

$T_h = R_{cv} \cdot ((w_{sa} \cdot L_{sa} + w_{sw} \cdot L_{sw}) / L_{cat})$

$= 200 \text{ m} \cdot ((998{,}9875 \text{ N/m} \cdot 0 \text{ m} + 86{,}525 \text{ N/m} \cdot 210 \text{ m}) / 210 \text{ m})$

$= 199{,}79 \text{ kN}$

Langkah 6

Menghitung besaran tension yang dibutuhkan oleh pipa

$T = \sqrt{(Tv^2 + Th^2)}$

$= \sqrt{((209{,}787\ kN)^2 + (199{,}79\ kN)^2)}$

$= 289{,}706\ kN$

Hasil perhitungan *tension* yang dibutuhkan dapat dilihat pada Tabel 4.20 dibawah ini.

Tabel 4.20. Hasil Perhitungan Besaran *Tension* yang Dibutuhkan Untuk Tahap *Laydown*

Laydown Process Applied Tension Analysis									
Step	Barge Move Forward	Length of Cable from R#1	Pulling Head Position	Length Of Pipe From Seabed	Length Of Submerged Pipe From Last Barge Roller (R7)	Length of Submerged Cable from Seabed	Vertical Tension/Tv (kN)	Horizontal Tension/Th (kN)	Applied Tension/T (kN)
1	-	57	Tensioner	243	210	0	209,7873837	199,7975083	289,706387
2	13	70	R5	230	210	0	209,7873837	199,7975083	289,706387
3	10	80	R6	220	210	0	209,7873837	199,7975083	289,706387
4	10	90	R7	210	210	0	209,7873837	199,7975083	289,706387
5	10	100	S1	200	200	10	200,6627677	191,1073978	277,1057268
6	5	105	S2	195	195	15	196,1004597	186,7623426	270,8053967
7	5	110	S3	190	190	20	191,5381517	182,4172873	264,5050666
8	10	120	S4	180	180	30	182,4135357	173,7271768	251,9044064
9	10	130	S5	170	170	40	173,2889197	165,0370664	239,3037462
10	10	140	Stinger Tip	160	160	50	164,1643037	156,3469559	226,703086
11	60	200	13.25m	100	100	110	109,4166076	104,206293	151,0991248
12	90	290	3.76m	10	10	200	27,29506354	25,99529861	37,69318298
13	10	300	Seabed	0	0	210	18,17044753	17,30518813	25,09252278

4.5. Analisis Statis Tahap *Initiation* dan *Laydown* Pada Pipa Saat Instalasi

Sebelumnya dijelaskan bahwa tahap *initiation* adalah proses peletakkan pipa bawah laut dari *barge* hingga menyentuh *seabed* untuk pertama kali dan tahap *laydown* adalah kebalikan dari proses *initiation* dimana sambungan pipa diturunkan untuk terakhir kali dari *barge*

menggunakan bantuan *wire rope*. Pada tahap ini dilakukan analisis tegangan dan regangan pada daerah *overbend*, *sagbend*, dan *stinger tip* dengan beban statis. Dalam penelitian kali ini juga dilakukan variasi nilai *tension* untuk tiap *step* penurunan pipa baik *initiation* maupun *laydown*. Variasi yang penulis lakukan akan dibedakan menjadi beberapa *design case* yang berguna untuk mendefinisikan kasus *initiation* dan *laydown* pada *software* OFFPIPE. Berikut pada Tabel 4.21 dan Tabel 4.22 adalah variasi yang dilakukan untuk memudahkan analisis yang dilakukan.

Tabel 4.21. *Design Case* untuk Tahap *Initiation*

Step	Design Case	Barge Move Forward	Panjang *joint* pipa dari R#1	Posisi Pulling Head	Applied Tension	
		(m)	(m)		(MT)	(kN)
1	1	-	80	5th Barge Roller	7,47	73,3
2	2	10	90	6th Barge Roller	7,47	73,3
3	3	10	100	7th Barge Roller	7,47	73,3
	4				8,67	85
4	5	10	110	1st Stinger Roller	8,67	85
	6				10,26	100,6
5	7	10	120	2nd Stinger Roller	10,26	100,6
	8				15,02	147,3
6	9	10	130	3rd Stinger Roller	15,02	147,3
	10				15,89	155,8
7	11	7	137	Stinger Tip	15,89	155,8
	12				18,34	179,9
8	13	3	140	36,38 m diatas Seabed	18,34	179,9
	14				21,67	212,5
9	15	10	150	33,67 m diatas Seabed	21,67	212,5
	16				34,06	334
10	17	70	220	17,99 m diatas Seabed	34,06	334
	18				36,93	362,2
11	19	50	270	3,83 m diatas Seabed	36,93	362,2
	20				39,65	388,8
12	21	10	280	Seabed	39,65	388,8

Tabel 4.22. *Design Case* untuk Tahap *Laydown*

Step	Design Case	Barge Move Forward	Panjang *cable* dari R#1	Posisi Pulling Head	Applied Tension	
		(m)	(m)		(MT)	(kN)
1	1	-	57	Tensioner	37,70	369,7
2	2	10	70	5th Barge Roller	37,70	369,7
3	3	10	80	6th Barge Roller	37,70	369,7
4	4	10	90	7th Barge Roller	37,70	369,7
	5				35,39	347,1
5	6	10	100	1st Stinger Roller	35,39	347,1
	7				32,71	320,8
6	8	5	105	2nd Stinger Roller	32,71	320,8
	9				32,07	314,5
7	10	5	110	3rd Stinger Roller	32,07	314,5
	11				30,78	301,9
8	12	10	120	4th Stinger Roller	30,78	301,9
	13				29,50	289,3
9	14	10	130	5th Stinger Roller	29,50	289,3
	15				28,22	276,7
10	16	10	140	Stinger Tip	28,22	276,7
	17				20,51	201,1
11	18	60	200	13,41 m diatas Seabed	20,51	201,1
	19				12,31	120,7
12	20	90	290	1,74 m diatas Seabed	12,31	120,7
	21				10,72	105,1
13	22	10	300	Seabed	10,72	105,1

Design case tersebut penulis bagi berdasarkan letak *pulling head* dan besaran *applied tension* yang digunakan dengan ilustrasi seperti pada Gambar 4.17 hingga 4.28 untuk proses *initiation*,

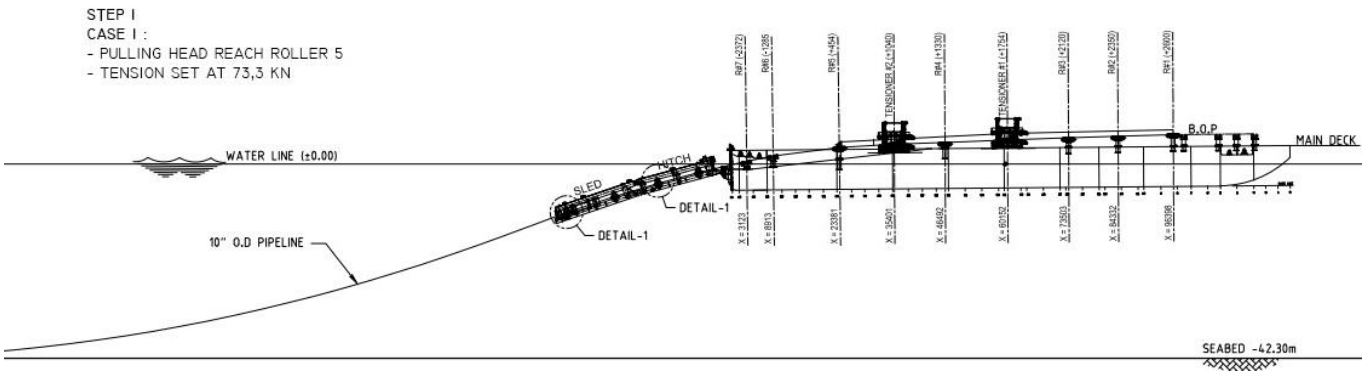

Gambar 4.17. Ilustrasi *Step* 1 Pada Proses *Initiation*

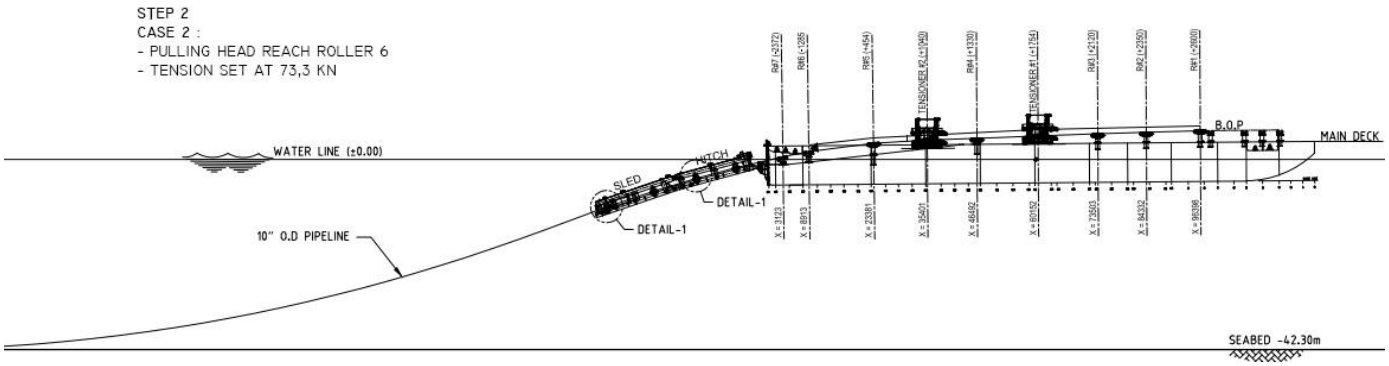

Gambar 4.18. Ilustrasi *Step* 2 Pada Proses *Initiation*

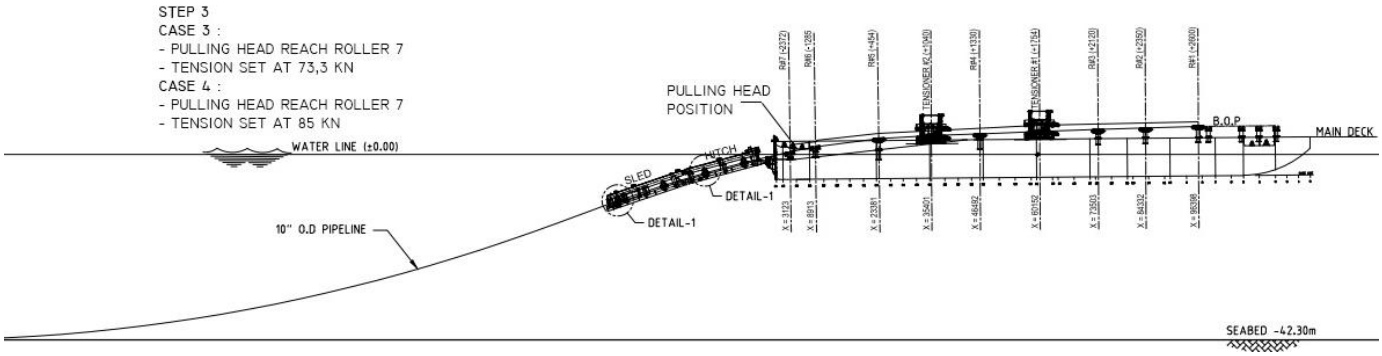

Gambar 4.19. Ilustrasi *Step* 3 Pada Proses *Initiation*

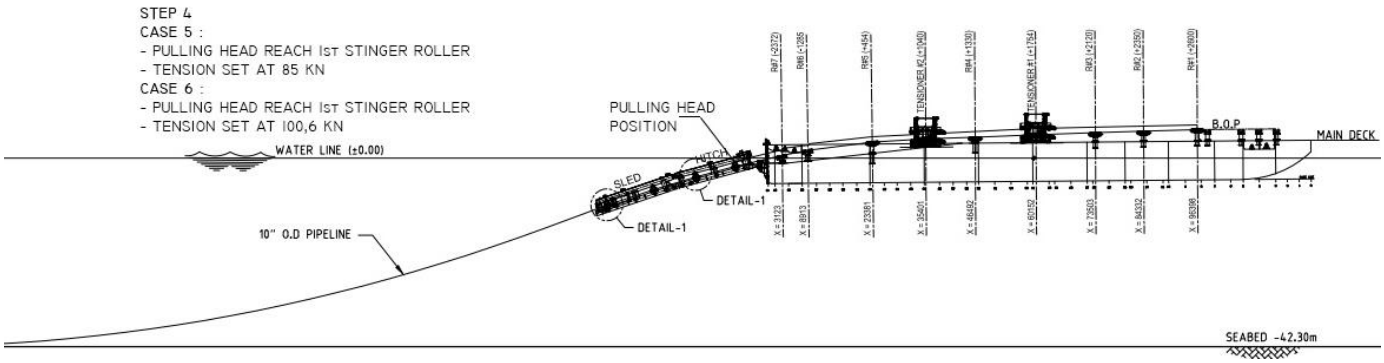

Gambar 4.20. Ilustrasi *Step* 4 Pada Proses *Initiation*

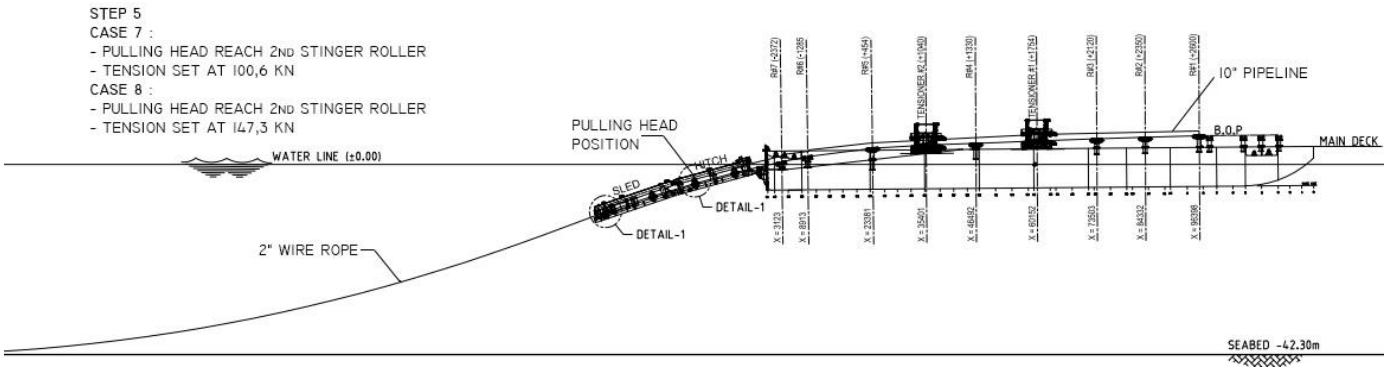

Gambar 4.21. Ilustrasi *Step* 5 Pada Proses *Initiation*

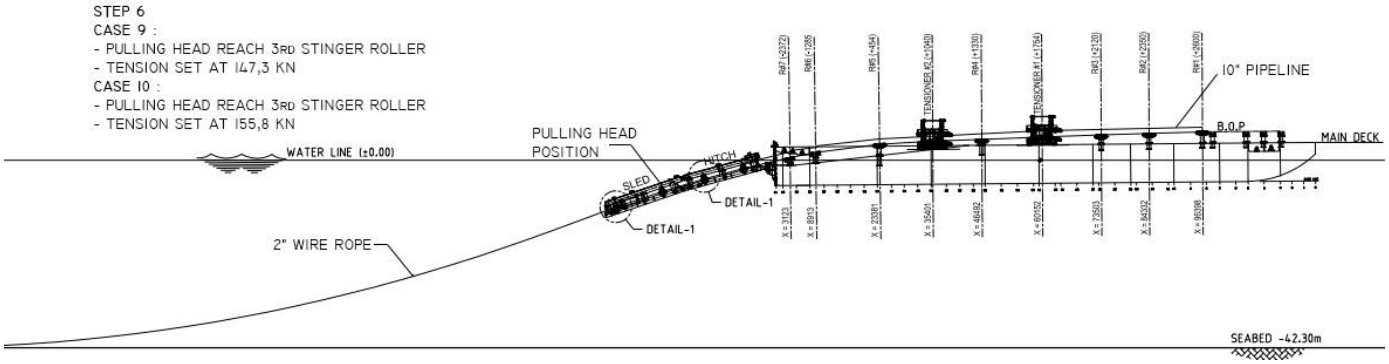

Gambar 4.22. Ilustrasi *Step* 6 Pada Proses *Initiation*

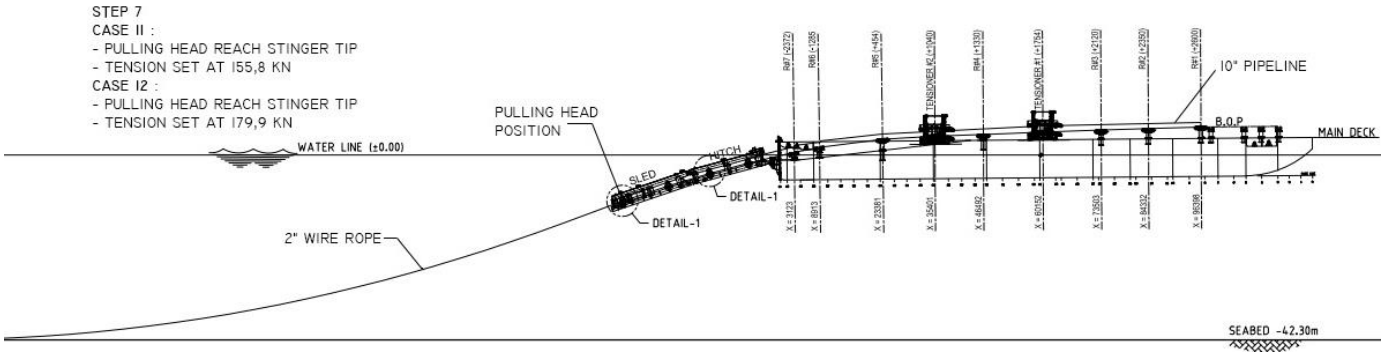

Gambar 4.23. Ilustrasi *Step* 7 Pada Proses *Initiation*

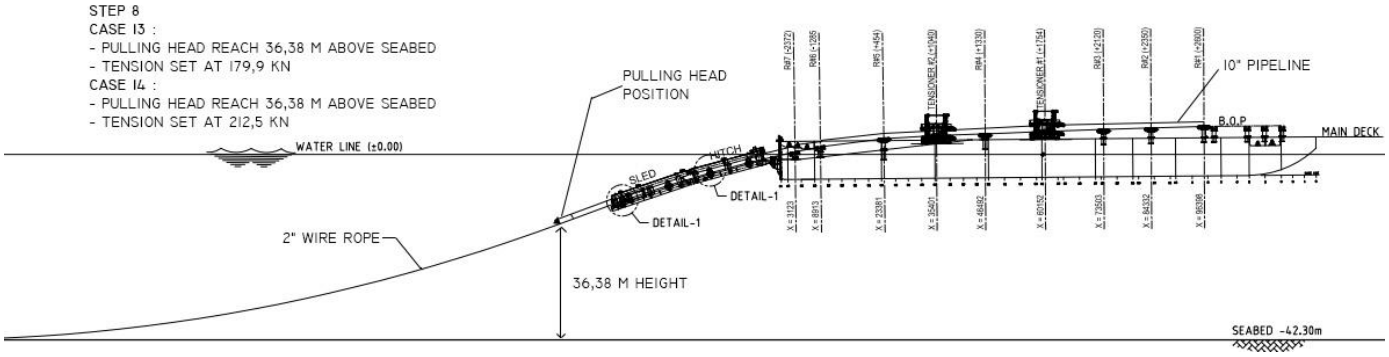

Gambar 4.24. Ilustrasi *Step* 8 Pada Proses *Initiation*

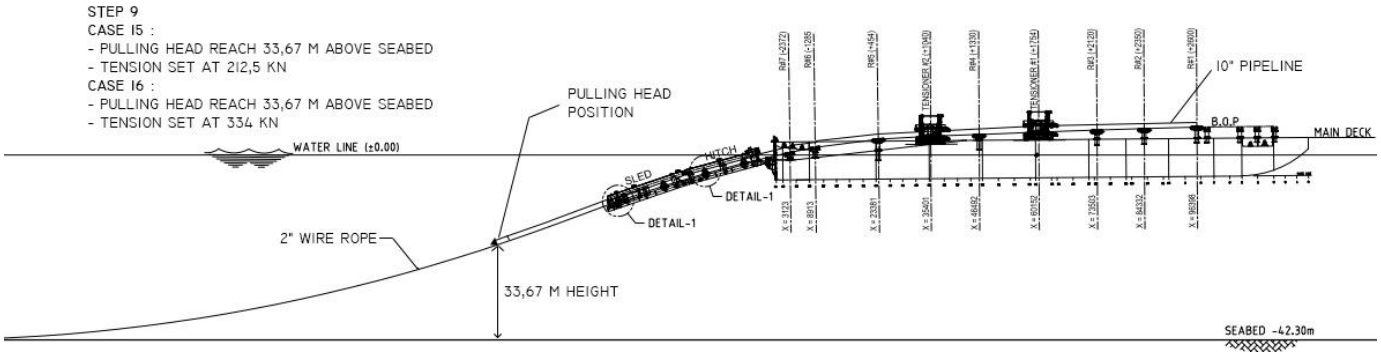

Gambar 4.25. Ilustrasi *Step* 9 Pada Proses *Initiation*

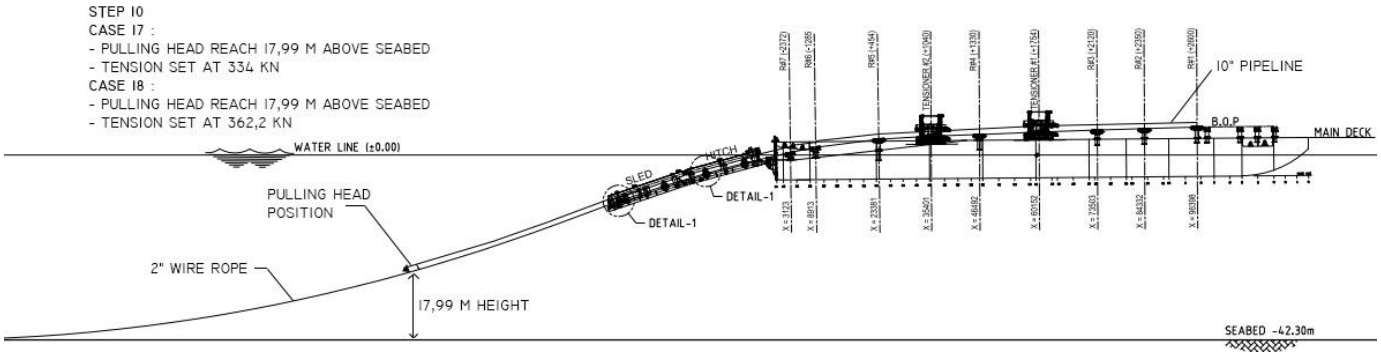

Gambar 4.26. Ilustrasi *Step* 10 Pada Proses *Initiation*

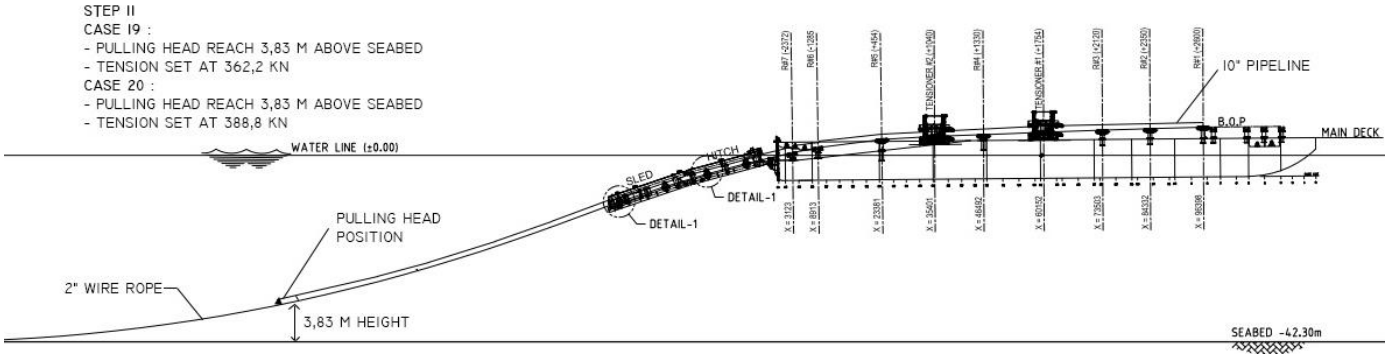

Gambar 4.27. Ilustrasi *Step* 11 Pada Proses *Initiation*

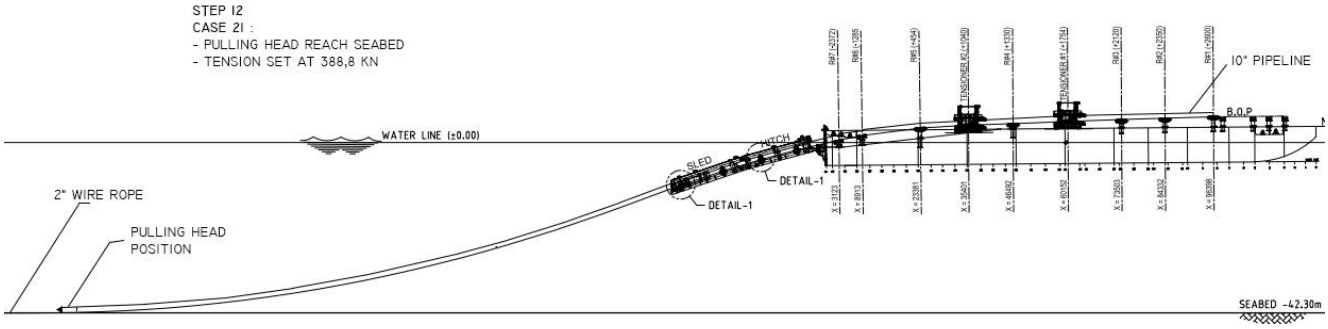

Gambar 4.28. Ilustrasi *Step* 12 Pada Proses *Initiation*

Sedangkan untuk tahap *Laydown* akan dibagi menjadi 13 *step* dengan pembagian berdasarkan letak *pulling head* dan besaran *tension* yang digunakan seperti ilustrasi pada Gambar 4.29 hingga 4.41 berikut ini,

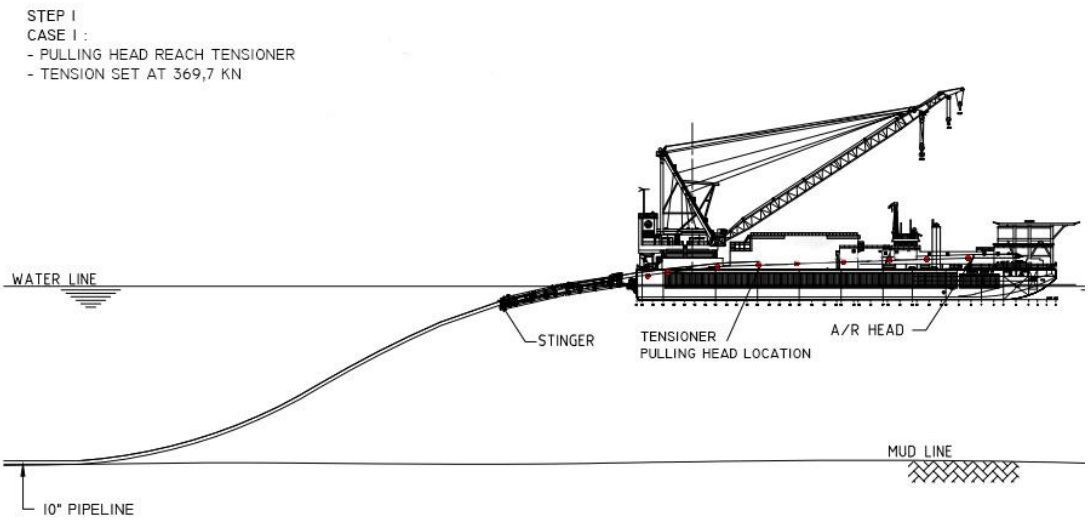

Gambar 4.29. Ilustrasi *Step* 1 Pada Proses *Laydown*

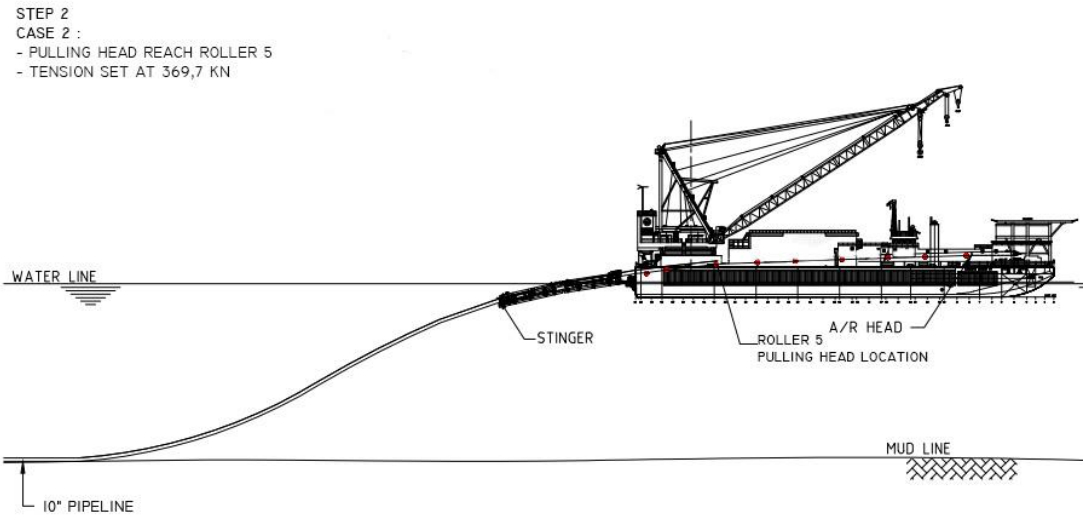

Gambar 4.30. Ilustrasi *Step* 2 Pada Proses *Laydown*

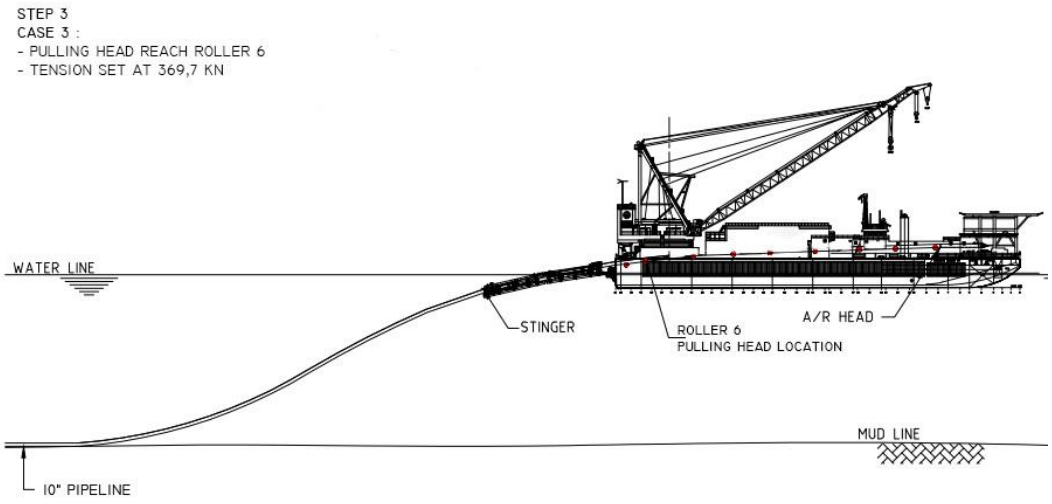

Gambar 4.31. Ilustrasi *Step* 3 Pada Proses *Laydown*

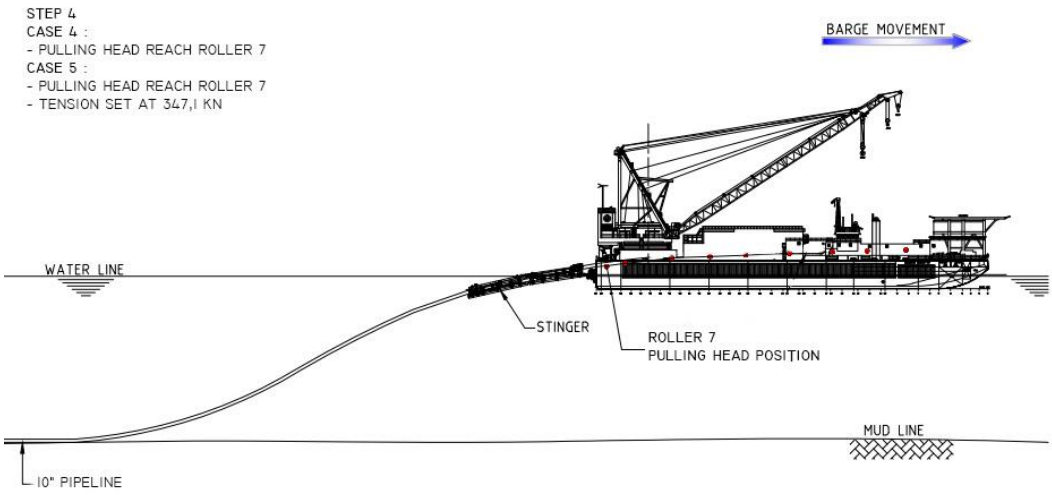

Gambar 4.32. Ilustrasi *Step* 4 Pada Proses *Laydown*

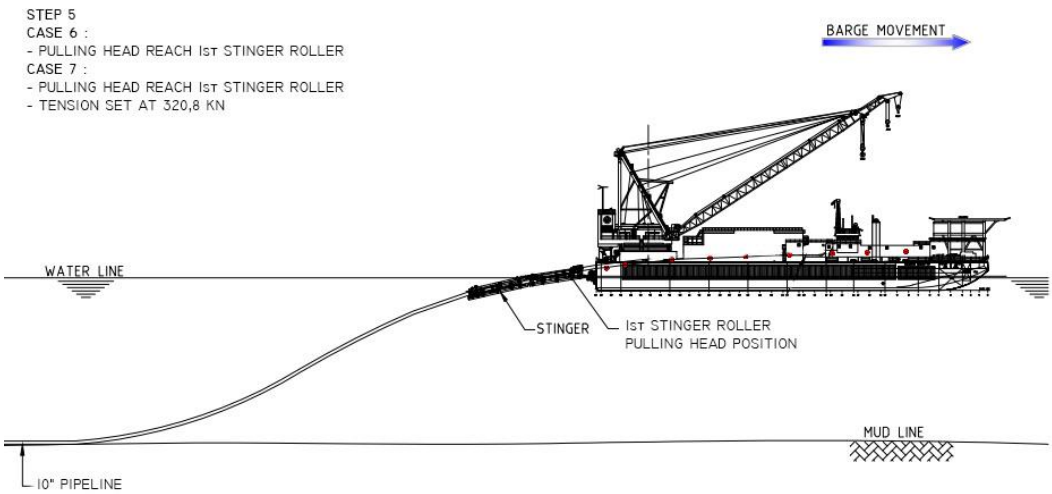

Gambar 4.33. Ilustrasi *Step* 5 Pada Proses *Laydown*

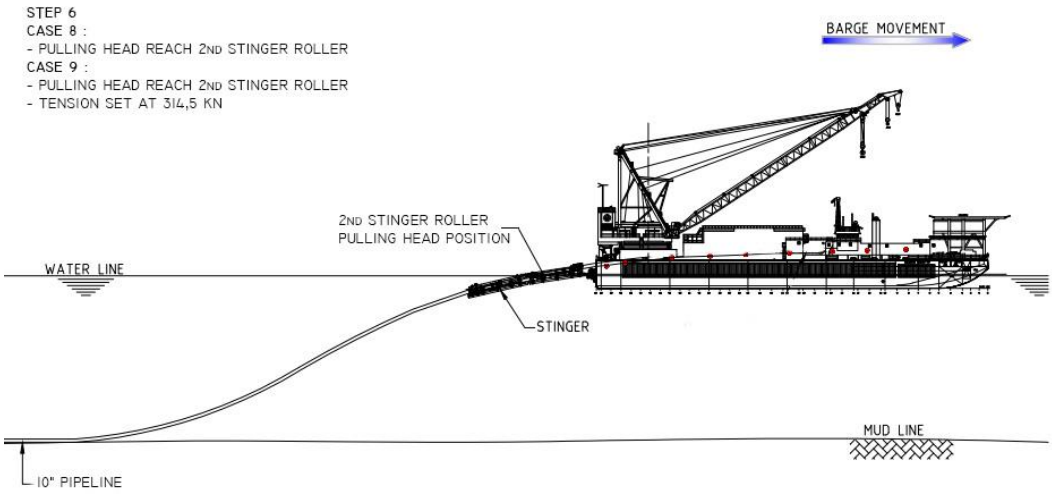

Gambar 4.34. Ilustrasi *Step* 6 Pada Proses *Laydown*

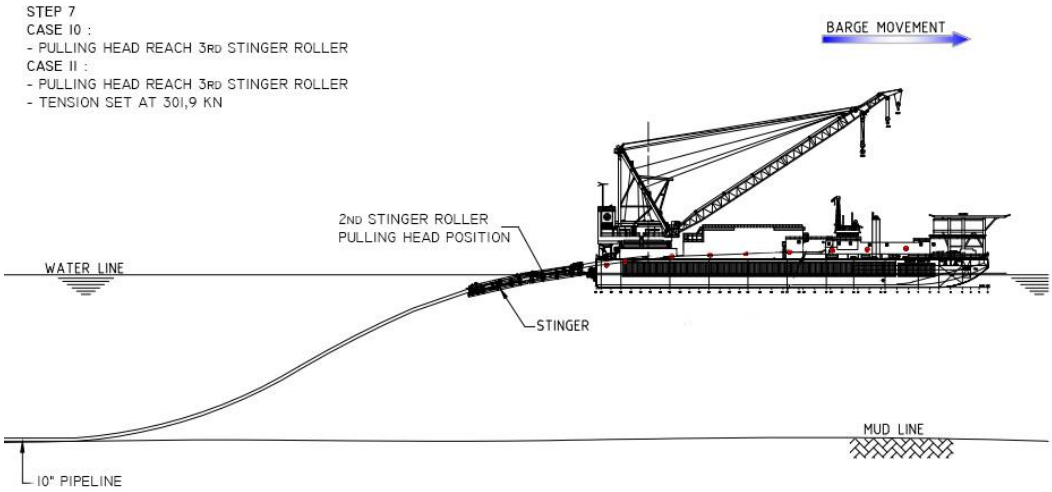

Gambar 4.35. Ilustrasi *Step* 7 Pada Proses *Laydown*

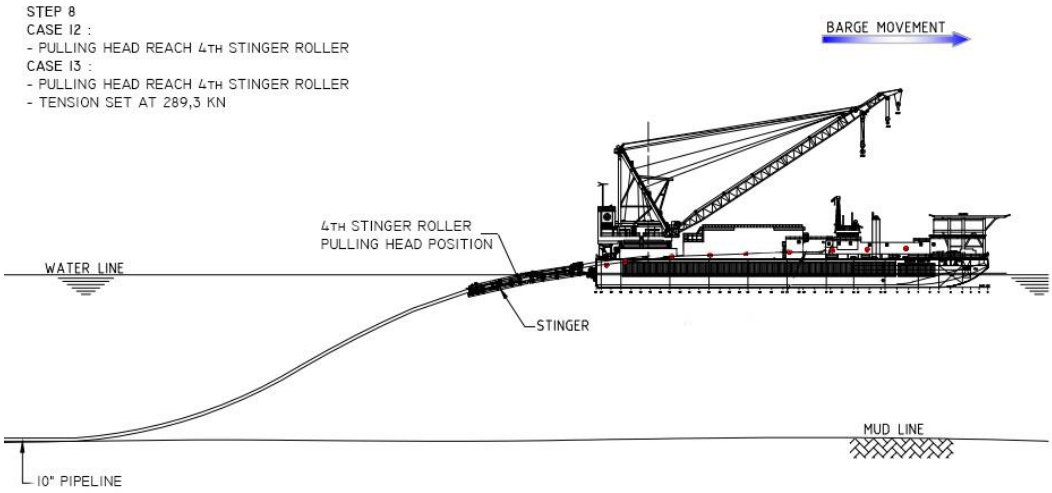

Gambar 4.36. Ilustrasi *Step* 8 Pada Proses *Laydown*

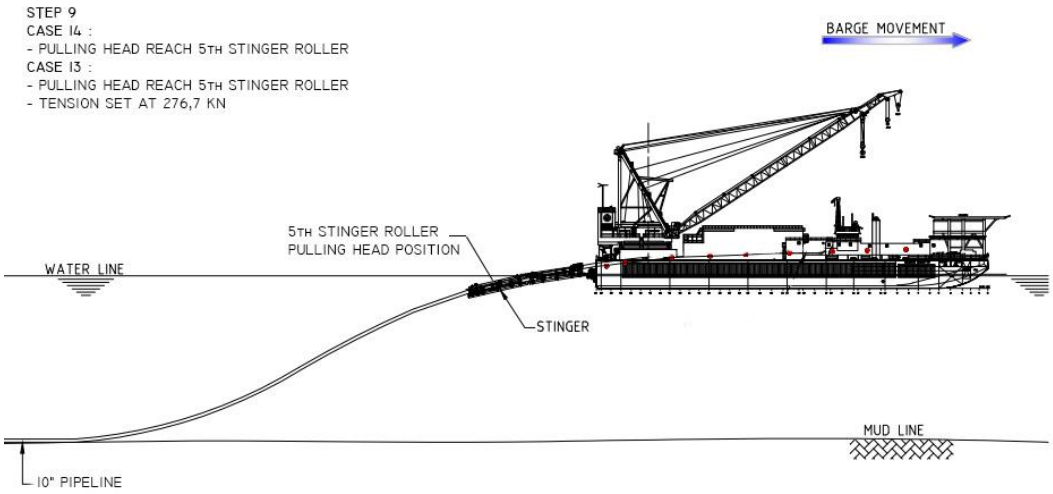

Gambar 4.37. Ilustrasi *Step* 9 Pada Proses *Laydown*

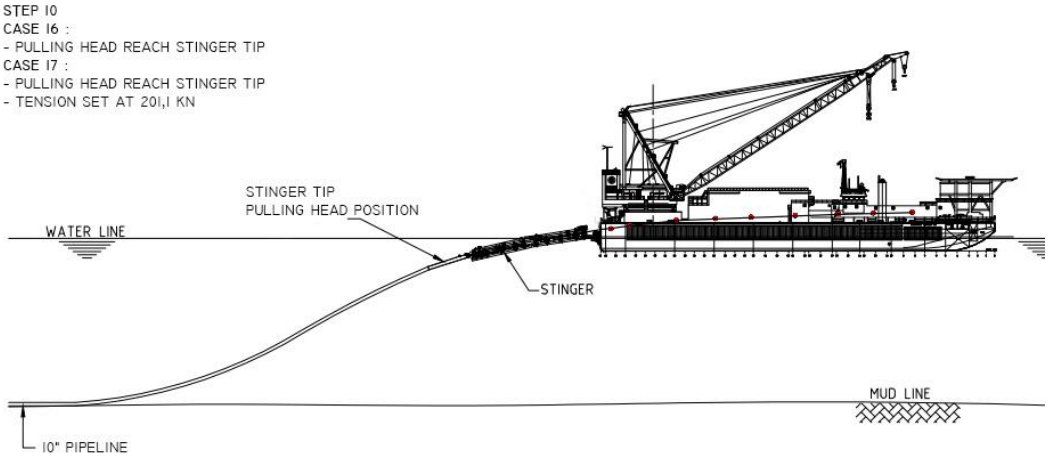

Gambar 4.38. Ilustrasi *Step* 10 Pada Proses *Laydown*

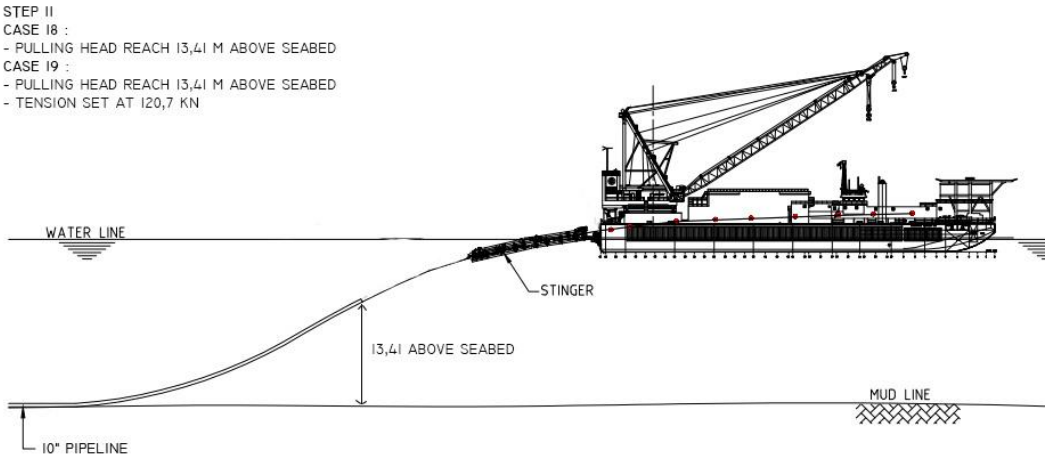

Gambar 4.39. Ilustrasi *Step* 11 Pada Proses *Laydown*

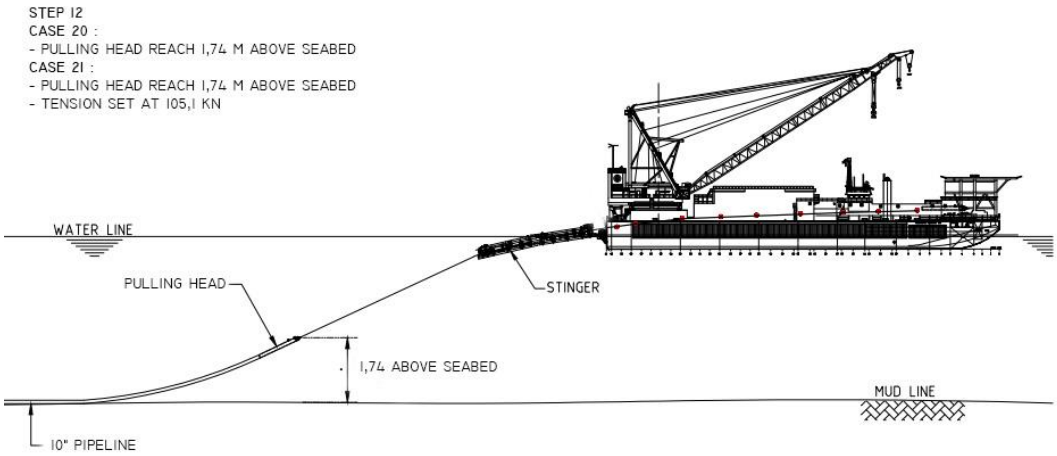

Gambar 4.40. Ilustrasi *Step* 12 Pada Proses *Laydown*

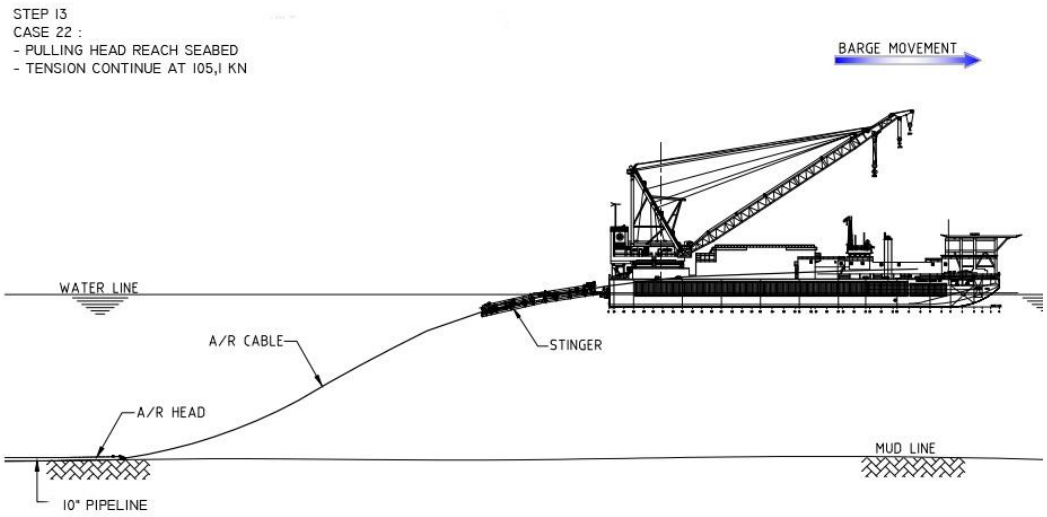

Gambar 4.41. Ilustrasi *Step* 13 Pada Proses *Laydown*

Data-data yang diperlukan telah dihitung pada sub bab 4.3 dan 4.4 juga terdapat pada Tabel 4.1 hingga 4.9. Analisis yang dilakukan menggunakan bantuan perangkat lunak OFFPIPE dengan memperhatikan kriteria yang dikeluarkan oleh DNV OS F101. Hasil analisis besaran tegangan dan regangan pada kondisi *initiation* dan *laydown* dapat dilihat pada Tabel 4.23 – 4.24, sedangkan untuk *output* analisis statis pada kondisi *initiation* dan *laydown* dengan menggunakan perangkat lunak OFFPIPE dapat dilihat pada Lampiran C.

Tabel 4.23. Hasil Perhitungan Analisis Proses *Initiation* Pada Saat Instalasi

Analisis Proses *Initiation* Saat Instalasi Pipa Bawah Laut														
Step	Barge Move Forward	Panjang *joint* pipa dari R#1	Posisi Pulling Head	Applied Tension		Cable Tension		Jarak Ketinggian *Pull Head*	Kriteria DNV OS F101 terhadap tegangan dan regangan pada pipa					
									Regangan Maksimum saat *overbend*		Tegangan maksimum pada ujung stinger (%SMYS)		Tegangan maksimum pada *Sagbend* (%SMYS)	
	(m)	(m)		(MT)	(kN)	(MT)	(kN)	(m)	Actual	Allowable	Actual	Allowable	Actual	Allowable
1	-	80	5th Barge Roller	7,47	73,3	7,23	70,91	4,49	0,0736	0,205	-	72	-	72
2	10	90	6th Barge Roller	7,47	73,3	7,23	70,92	2,29	0,1093		-		-	
3	10	100	7th Barge Roller	7,47	73,3	7,23	70,91	1	0,0992		-		-	
				8,67	85	8,42	82,61		0,1001		-		-	
4	10	110	1st Stinger Roller	8,67	85	8,42	82,62	0,25	0,1083		-		-	
				10,26	100,6	10,02	98,22		0,1096		-		-	
5	10	120	2nd Stinger Roller	10,26	100,6	10,02	98,22	-0,14	0,1008		-		-	
				15,02	147,3	14,78	144,91		0,1038		-		-	
6	10	130	3rd Stinger Roller	15,02	147,3	14,78	144,93	-3,56	0,1079		-		-	
				15,89	155,8	15,64	153,42		0,1056		-		-	
7	7	137	Stinger Tip	15,89	155,8	15,64	153,42	-5,63	0,1209		3,66		-	
				18,34	179,9	18,10	177,53		0,1133		4,31		-	
8	3	140	36,38 m diatas Seabed	18,34	179,9	18,10	177,53	-6,29	0,1276		9,23		4,28	
				21,67	212,5	21,43	210,13		0,1168		10,21		5,17	
9	10	150	33,67 m diatas Seabed	21,67	212,5	21,43	210,12	-9	0,1817		23,78		21,04	
				34,06	334	33,82	331,62		0,1476		23,64		11,45	
10	70	220	17,99 m diatas Seabed	34,06	334	33,82	331,62	-24,68	0,1644		25,37		38,69	
				36,93	362,2	36,69	359,82		0,1937		51,02		36,69	
11	50	270	3,83 m diatas Seabed	36,93	362,2	36,69	359,82	-38,84	0,1977		55,82		38,37	
				39,65	388,8	39,40	386,42		0,1676		58,27		36,65	
12	10	280	Seabed	39,65	388,8	39,40	386,42	-39,8	0,1719		58,9		36,89	

Tabel 4.24. Hasil Analisis Tahap *Laydown* Pada Saat Instalasi

Analisis Proses *Laydown* Saat Instalasi Pipa Bawah Laut														
Step	Barge Move Forward	Panjang *cable* dari R#1	Posisi Pulling Head	Applied Tension		Cable Tension		Jarak Ketinggian *Pull Head*	Kriteria DNV OS F101 terhadap tegangan dan regangan pada pipa					
									Regangan Maksimum saat *overbend*		Tegangan maksimum pada ujung stinger (%SMYS)		Tegangan maksimum pada *Sagbend* (%SMYS)	
	(m)	(m)		(MT)	(kN)	(MT)	(kN)	(m)	Actual	Allowable	Actual	Allowable	Actual	Allowable
1	-	57	Tensioner	37,70	369,7	37,69	369,57	4,5	0,1615	0,205	42,8	72	38,13	72
2	10	70	5th Barge Roller	37,70	369,7	37,69	369,57	3,93	0,1855		42,76		38,1	
3	10	80	6th Barge Roller	37,70	369,7	37,69	369,57	2,3	0,1259		42,49		37,92	
4	10	90	7th Barge Roller	37,70	369,7	37,69	369,57	1,28	0,1216		42,39		37,78	
				35,39	347,1	35,38	346,97		0,1257		43,38		39,27	
5	10	100	1st Stinger Roller	35,39	347,1	35,38	346,97	-1,66	0,1261		43,48		38,97	
				32,71	320,8	32,70	320,67		0,0918		31,02		41,03	
6	5	105	2nd Stinger Roller	32,71	320,8	32,70	320,67	-2,22	0,0921		31,15		41	
				32,07	314,5	32,06	314,37		0,0924		31,26		41,56	
7	5	110	3rd Stinger Roller	32,07	314,5	32,06	314,38	-4,77	0,1086		26,36		41,33	
				30,78	301,9	30,77	301,78		0,1111		26,46		42,53	
8	10	120	4th Stinger Roller	30,78	301,9	30,77	301,76	-7,18	0,0686		21,56		42,38	
				29,50	289,3	29,49	289,16		0,0681		21,21		43,71	
9	10	130	5th Stinger Roller	29,50	289,3	29,49	289,18	-10,36	0,0288		16,54		43,39	
				28,22	276,7	28,20	276,58		0,286		16,44		44,84	
10	10	140	Stinger Tip	28,22	276,7	21,43	210,12	-12,39	-		-		44,53	
				20,51	201,1	33,82	331,62		-		-		57,57	
11	60	200	13,41 m diatas Seabed	20,51	201,1	33,82	331,62	-28,94	-		-		53,28	
				12,31	120,7	36,69	359,82		-		-		70,85	
12	90	290	1,74 m diatas Seabed	12,31	120,7	36,69	359,82	-40,61	-		-		42,29	
				10,72	105,1	39,40	386,42		-		-		37,78	
13	10	300	Seabed	10,72	105,1	39,40	386,42	-41,41	-		-		34,04	

4.6. Analisa Dinamis Tahap *Initiation* dan *Laydown* Pada Pipa Saat Instalasi

Pada analisis dinamis tahap *initiation* dan *laydown* dengan basis frekuensi ini dilakukan dengan menggunakan perangkat lunak OFFPIPE versi 3.02. Data yang harus diinputkan pada analisis ini meliputi,

- Data properti *pipeline* yang telah dihitung pada sub bab 4.3
- Data konfigurasi *roller* dan *tensioner* pada *barge* dan *stinger*
- Data kedalaman laut, gelombang, dan arus
- Data parameter spektrum gelombang di daerah platform BG dan BC
- Data RAO (*Response Amplitude Operator*) dari barge DLB 01

Data RAO yang akan diinputkan ke perangkat lunak OFFPIPE merupakan data hasil analisis RAO dari *barge* DLB 01 yang dimodelkan kemudian dianalisis respon gerakannya menggunakan perangkat lunak MOSES. Perlu diperhatikan bahwa untuk arah pembebanan gelombang pada perangkat lunak OFFPIPE dan MOSES memiliki aturan yang berbeda, perbedaan tersebut dapat dilihat pada Gambar 4.18 berikut,

Gambar 4.42. Perbedaan arah pembebanan pada MOSES dan OFFPIPE

Perbedaan ini perlu diperhatikan agar analisis yang dilakukan dapat dikatakan valid. Analisis tegangan dan regangan pada penelitian kali ini dilakukan dengan memvariasikan besaran *tension* seperti yang sudah dijelaskan pada Tabel 4.21 dan 4.22. Pada analisis ini akan ditinjau besaran tegangan dan regangan yang terjadi dengan menggunakan *software* OFFPIPE dan kemudian divalidasi apakah tegangan dan regangan yang

terjadi melebihi batas yang ditentukan oleh DNV OS F101 baik pada tahap *initiation* maupun *laydown*. Hasil *output* keseluruhan analisis dinamis untuk tahap *initiation* dan *laydown* dapat dilihat pada Lampiran D.

4.6.1. Analisis dinamis tahap *initiation*

Analisis dinamis ini dilakukan sehingga dapat diketahui besarnya regangan dan tegangan yang terjadi pada tahap *initiation* akibat pengaruh beban arus, gelombang serta respon gerakan *dari pipelaying barge*. Grafik dibawah ini adalah hasil perhitungan analisis dinamis pada tahap *initiation* dengan ilustrasi mulai pada Gambar 4.17 – Gambar 4.28 dengan lokasi titik 0 (*Horizontal X Coordinate*) pada sambungan antara *barge* dan *stinger*.

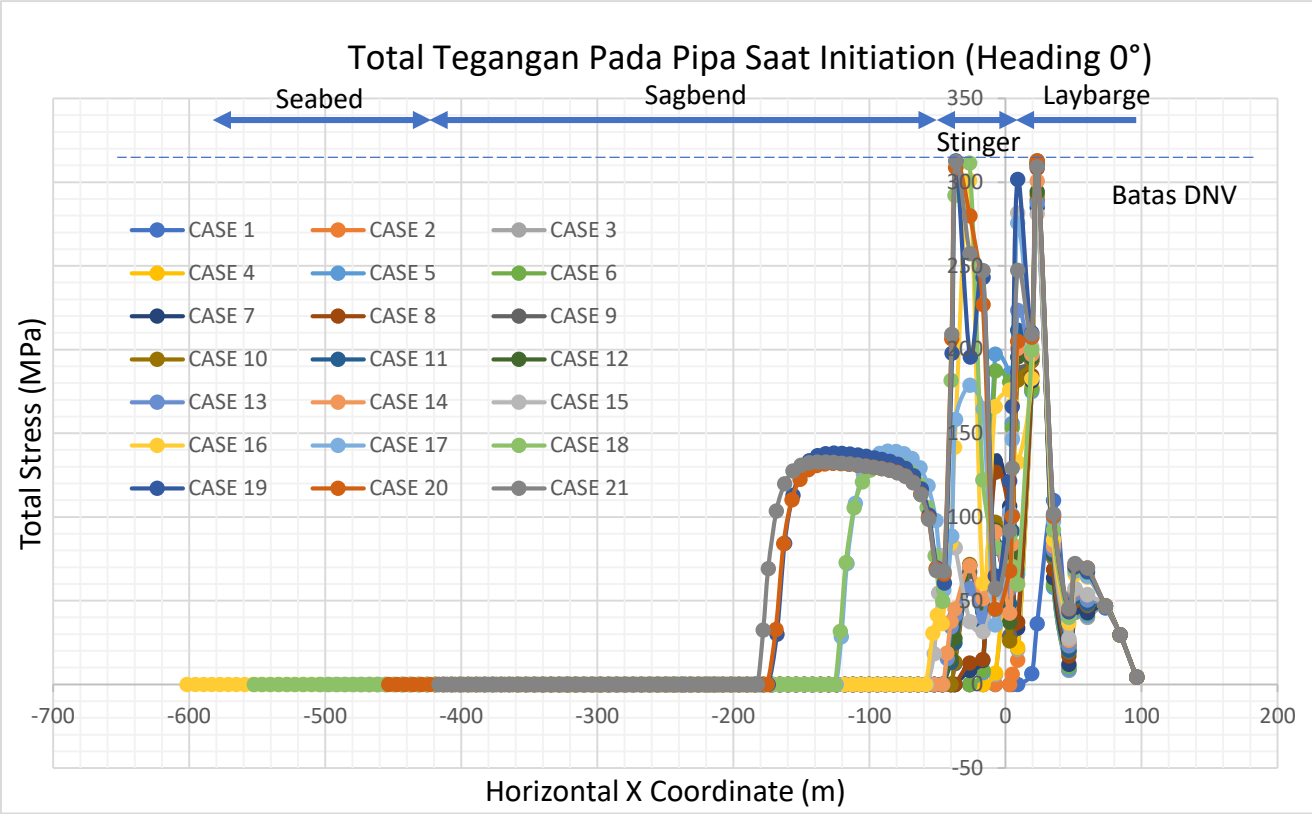

Berdasarkan Gambar 4.43 diatas, besarnya tegangan total terbesar yang terjadi pada ujung *stinger* sebesar 209,052 MPa atau sebesar 58,07% dari SMYS pipa pada *case* 16 sedangkan pada daerah *sagbend* tegangan terbesar yang terjadi bernilai 38,7% dari SMYS pipa atau sama dengan 139,32 MPa, nilai-nilai tersebut masih berada pada kriteria DNV OS F101 dengan nilai tidak melebihi 87% dari SMYS pipa.

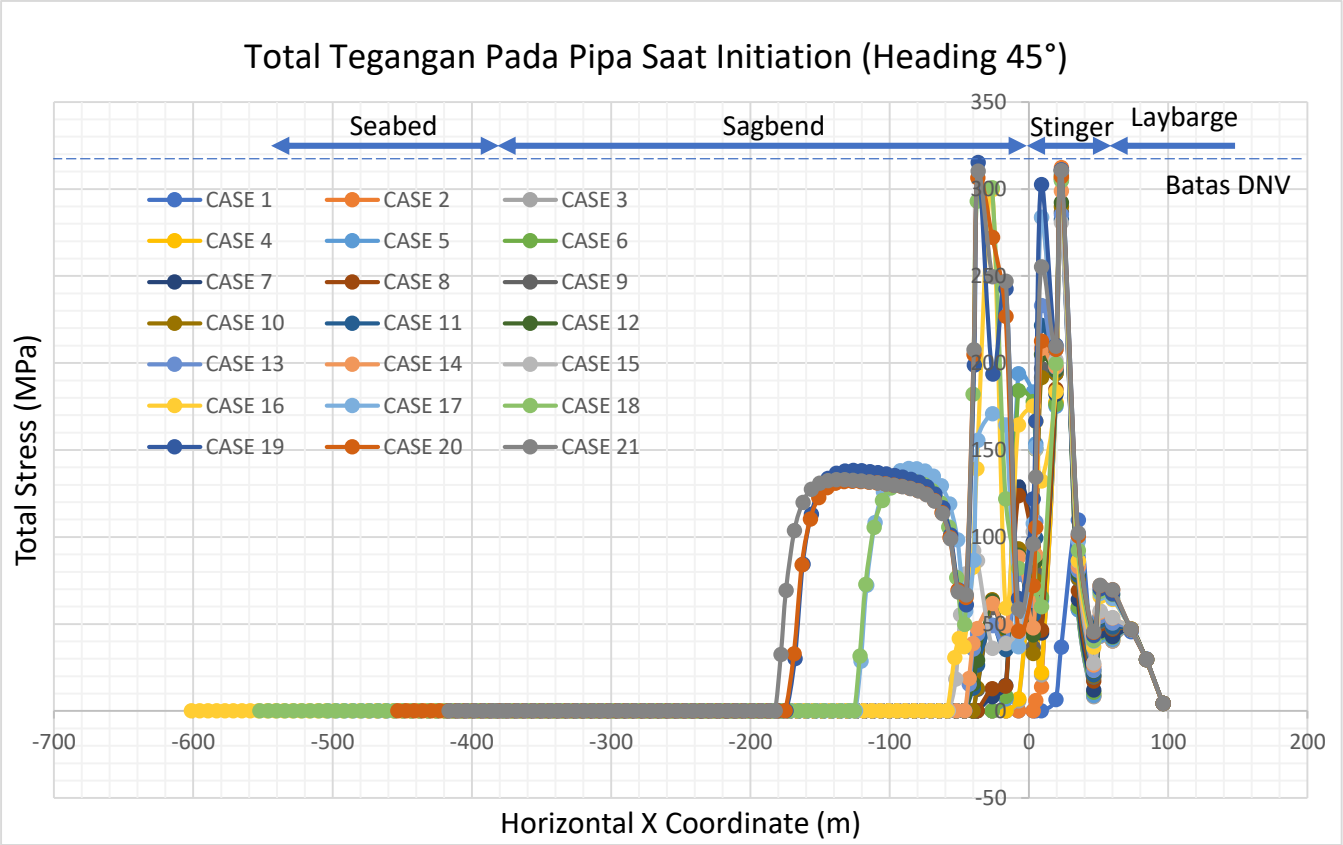

Gambar 4.44. Grafik Distribusi Tegangan Pada Tahap *Initiation* dengan Variasi *Tension* Pada Arah Pembebanan 45°

Berdasarkan Gambar 4.44 diatas, tegangan total terbesar yang terjadi pada ujung *stinger* sebesar 207,504 MPa atau sama dengan 57,64% dari SMYS pipa tepatnya terjadi pada *case* 21. Sedangkan pada daerah *sagbend*, tegangan terbesar terjadi pada *case* 17 dengan nilai mencapai 38,71% dari SMYS atau sebesar 139,36 MPa.

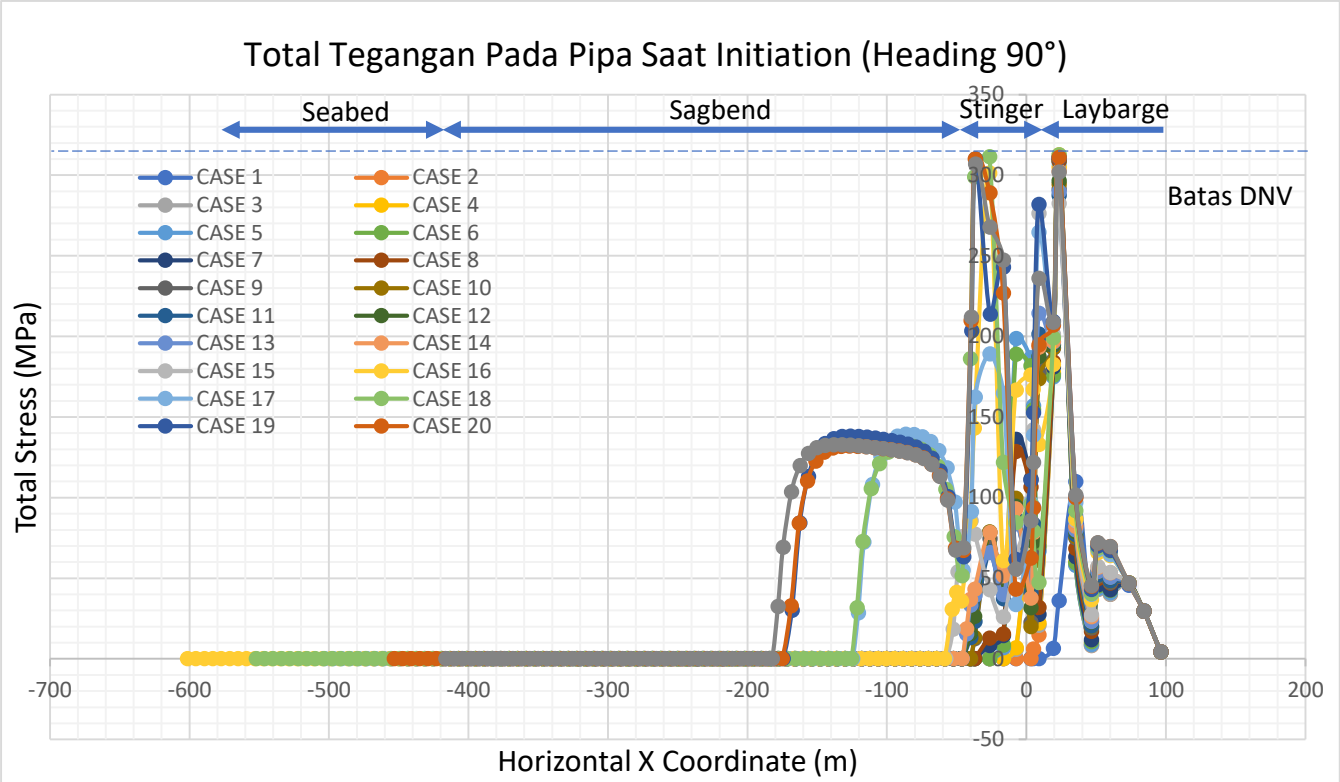

Gambar 4.45. Grafik Distribusi Tegangan Pada Tahap Initiation dengan Variasi Tension Pada Arah Pembebanan 90°

Dari Gambar 4.45 diatas, tegangan total terbesar yang terjadi pada ujung *stinger* terjadi *case* 21 dengan nilai tegangan 58,9% dari SMYS pipa atau sama dengan 212,04 MPa. Kemudian pada daerah *sagbend* terjadi tegangan terbesar pada *case* 17 dengan nilai sebesar 38,69% dari SMYS pipa atau sama dengan 139,28 MPa. Nilai-nilai ini sudah memenuhi kriteria yang diberikan DNV OS F101 yaitu sebesar 87% dari SMYS pipa atau sama dengan 313,2.

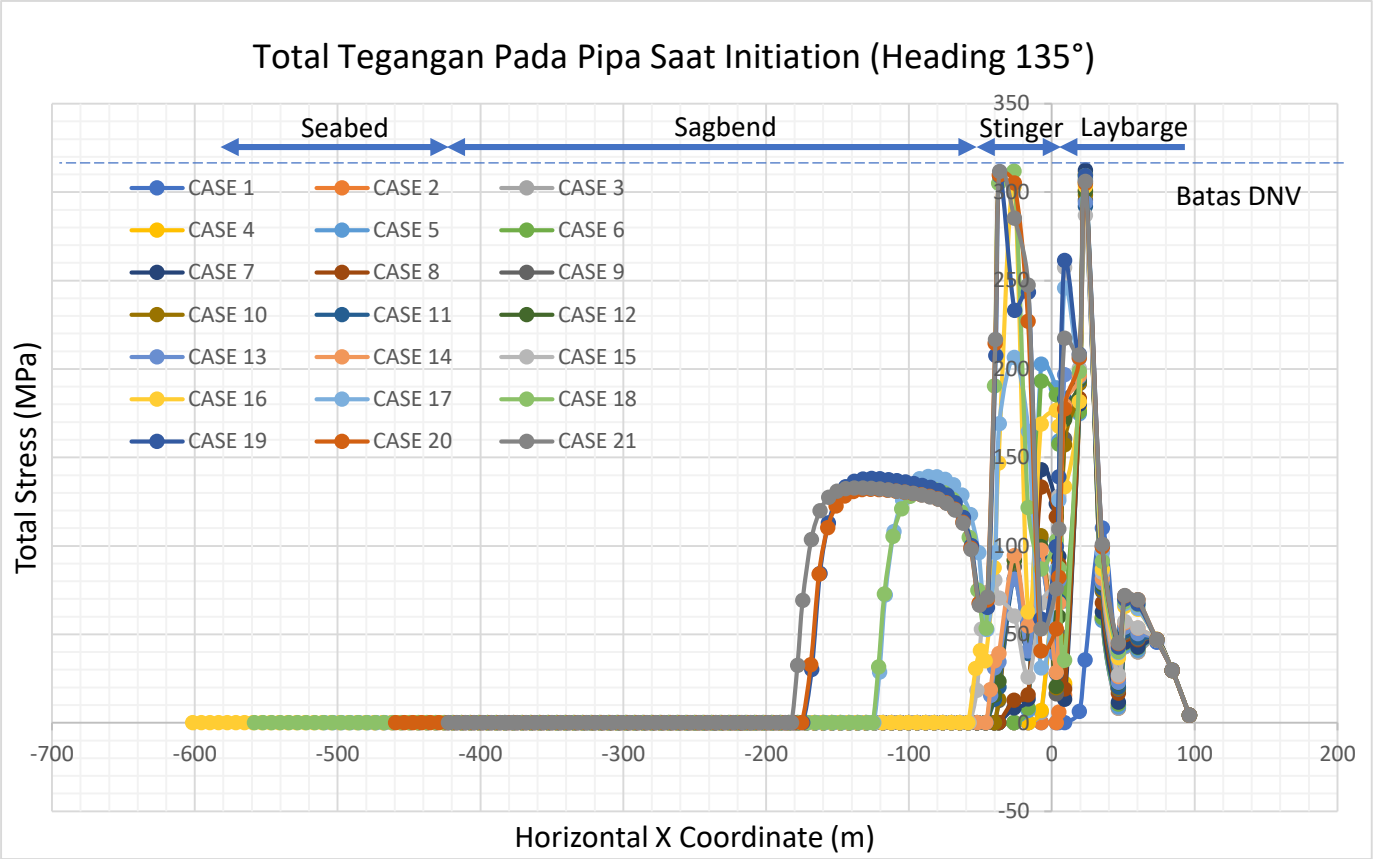

Gambar 4.46. Grafik Distribusi Tegangan Pada Tahap Initiation dengan Variasi Tension Pada Arah Pembebanan 135°

Dari Gambar 4.46 diatas dapat disimpulkan bahwa pada *case* 21 terdapat tegangan maksimum pada ujung *stinger* dengan nilai sebesar 216,612 MPa atau sama dengan 60,17% dari SMYS pipa. Lalu pada daerah *sagbend* terjadi tegangan maksimum sebesar 139,21 MPa yang bernilai sama dengan 38,67% dari SMYS pipa. Besaran-besaran tersebut telah memenuhi kriteria yang ditetapkan oleh DNV OS F101 dengan besaran tegangan pada ujung *stinger* dan *sagbend* tidak boleh melebihi 87% dari SMYS pipa.

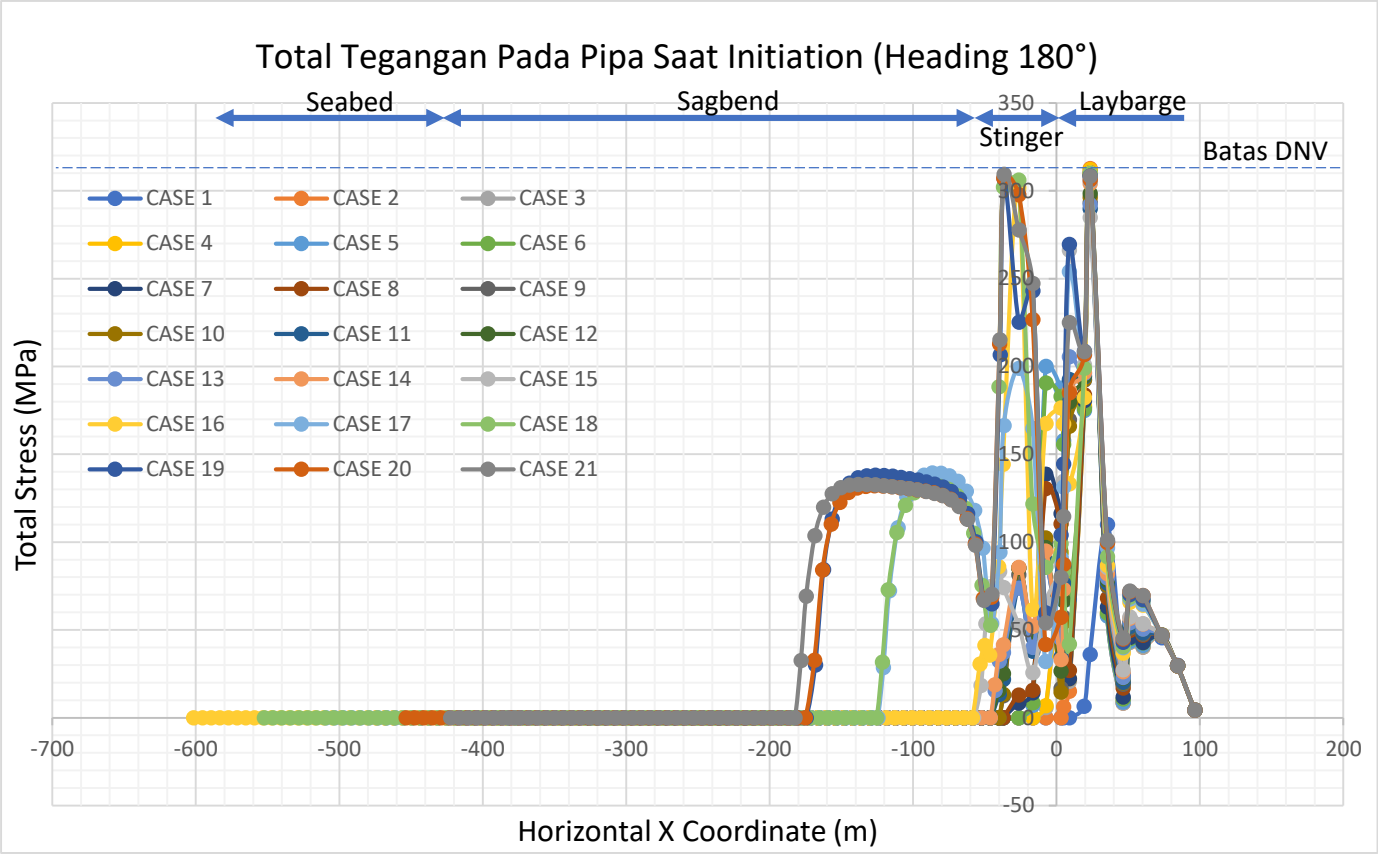

Gambar 4.47. Grafik Distribusi Tegangan Pada Tahap *Initiation* dengan Variasi Tension Pada Arah Pembebanan 180°

Gambar 4.47 diatas menjelaskan bahwa tegangan terbesar terjadi pada pada *case* 21 dengan nilai tegangan sebesar 215,028 MPa yang bernilai sama dengan 59,73% dari SMYS pipa. Sedangkan pada daerah *sagbend* terjadi tegangan terbesar pada *case* 17 dengan nilai 139,25 MPa atau sama dengan 38,68% dari SMYS pipa. Nilai tersebut telah memenuhi syarat yang diatur dalam DNV OS F101 yaitu sebesar 313,2 MPa yang bernilai sama dengan 87% dari SMYS pipa.

Kemudian nilai maksimum regangan yang terjadi pada tahap *initiation* dapat dilihat pada Tabel 4.25 yang menyajikan variasi nilai regangan yang terjadi pada daerah *sagbend* dan *overbend* dengan arah pembebanan yang berbeda pula. Penyajian dalam bentuk tabel ini dimaksudkan agar pembaca lebih mudah memahami perubahan kenaikan regangan yang terjadi pada *pipeline* yang nilainya akan sulit dipahami jika dalam bentuk grafik. Dari hasil analisis yang telah dilakukan didapat nilai

regangan terbesar yang terjadi pada tahap *initiation* dengan nilai sebesar 0,2372 %, untuk lebih lengkapnya dapat dilihat pada Tabel 4.25 dibawah ini,

Tabel 4.25. Besaran Regangan Maksimum yang Terjadi Pada Tahap *Initiation*

Syarat Batas			Nilai bernilai maksimum pada *case*	Bagian daerah pipa	Kriteria DNV OS F101	
Arah Pembebanan	Tinggi Gelombang	*Peak Period*			Regangan Maksimum Saat *Overbend* (%)	
(deg)	(m)	(s)			Actual	Allowable
0	0,7	3,95	19	Laybarge	0,2332	0,26
45	0,7	3,95	19	Laybarge	0,2365	
90	0,8	4,22	19	Laybarge	0,1977	
135	0,7	3,95	18	Stinger	0,2372	
180	0,7	3,95	18	Stinger	0,2179	

4.6.2. Analisis dinamis tahap *Laydown*

Selanjutnya adalah analisis dinamis pada tahap *laydown* yang dilakukan dengan memperhatikan pengaruh akibat beban arus, gelombang dan respon gerakan dari *pipelaying barge*. Artinya dalam analisis ini akan ditentukan besaran tegangan dan regangan pada saat pipa akan diletakkan keatas *seabed* untuk terakhir kali yang terpengaruh beban lingkungan.

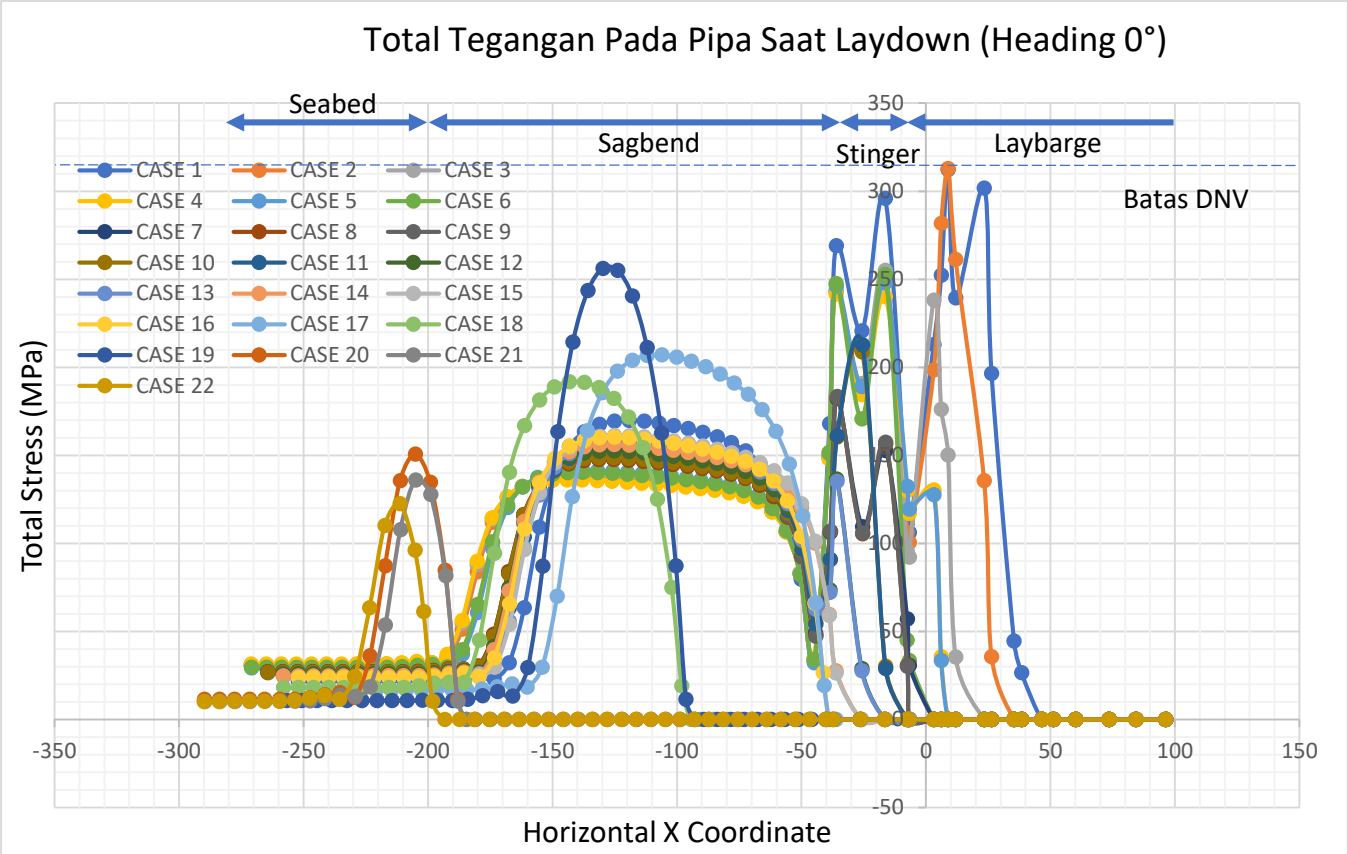

Gambar 4.48. Grafik Distribusi Tegangan Pada Tahap *Laydown* dengan Variasi Tension Pada Arah Pembebanan 0°

Dari Gambar 4.48 diatas dapat diketahui bahwa besaran tegangan terbesar yang terjadi pada ujung *stinger* pada *case* 1 sebesar 168,012 MPa atau sama dengan 46,67% dari SMYS pipa. Kemudian pada daerah *sagbend* terjadi tegangan terbesar pada *case* 19 dengan nilai sebesar 256,14 MPa atau sama dengan 71,15% dari SMYS pipa. Nilai tersebut telah memenuhi kriteria DNV OS F101 dengan besaran tegangan tidak melebihi 313,2 MPa atau sama dengan 87% dari SMYS pipa berjenis X52.

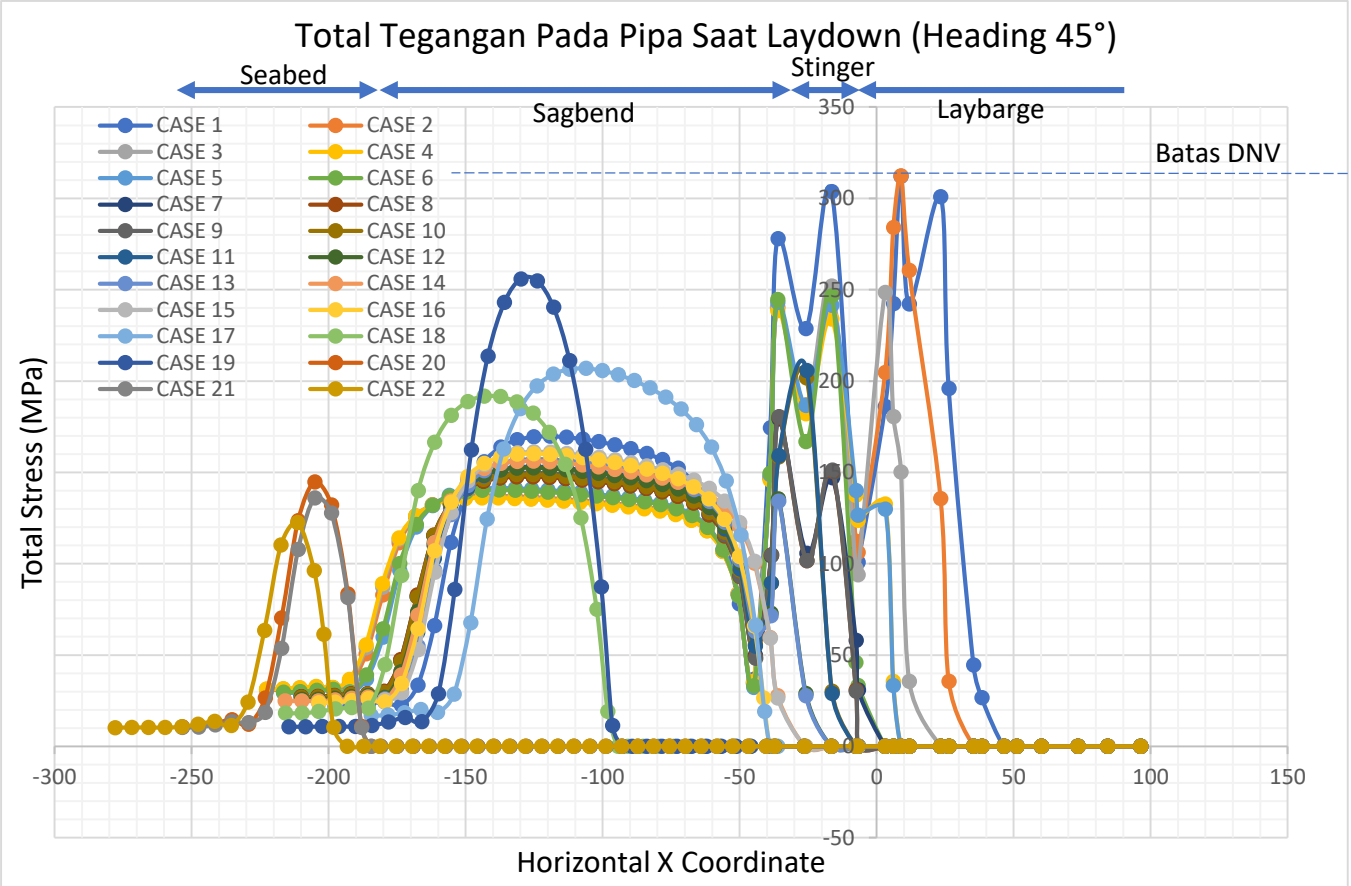

Gambar 4.49. Grafik Distribusi Tegangan Pada Tahap *Laydown* dengan Variasi Tension Pada Arah Pembebanan 45°

Berdasarkan Gambar 4.49 diatas, tegangan maksimum yang terjadi pada ujung *stinger* sebesar 312,18 MPa pada *case* 2 yaitu pada sumbu x sebesar 8,89 m yang masih pada daerah *laybarge*.

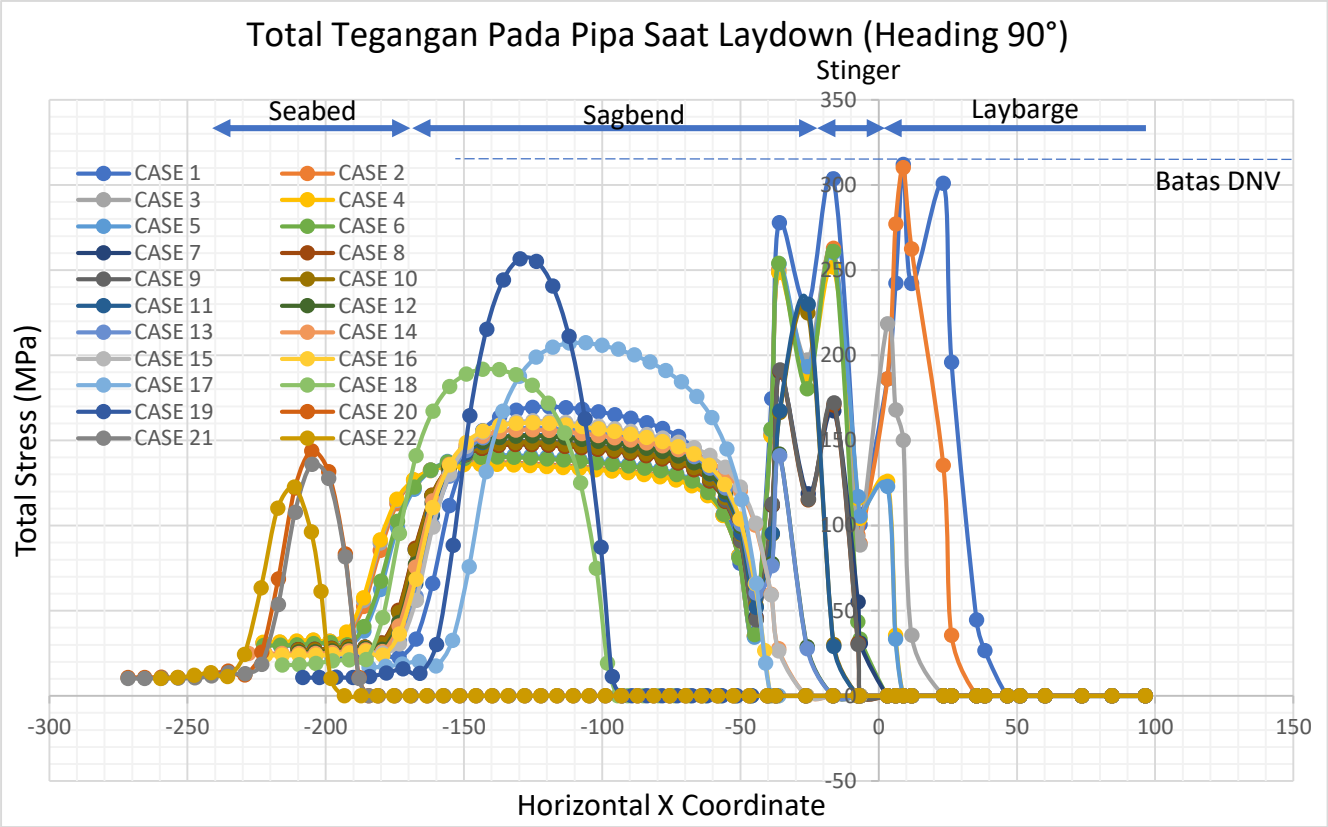

Gambar 4.50. Grafik Distribusi Tegangan Pada Tahap *Laydown* dengan Variasi *Tension* Pada Arah Pembebanan 90°

Seperti yang dapat dilihat pada Gambar 4.50 diatas, tegangan maksimum pada tahap *laydown* terjadi pada *case* 2 dengan letak *node* pada jarak 8,89 m terhadap sumbu x atau berada pada daerah *laybarge* dengan nilai tegangan sebesar 310,07 MPa.

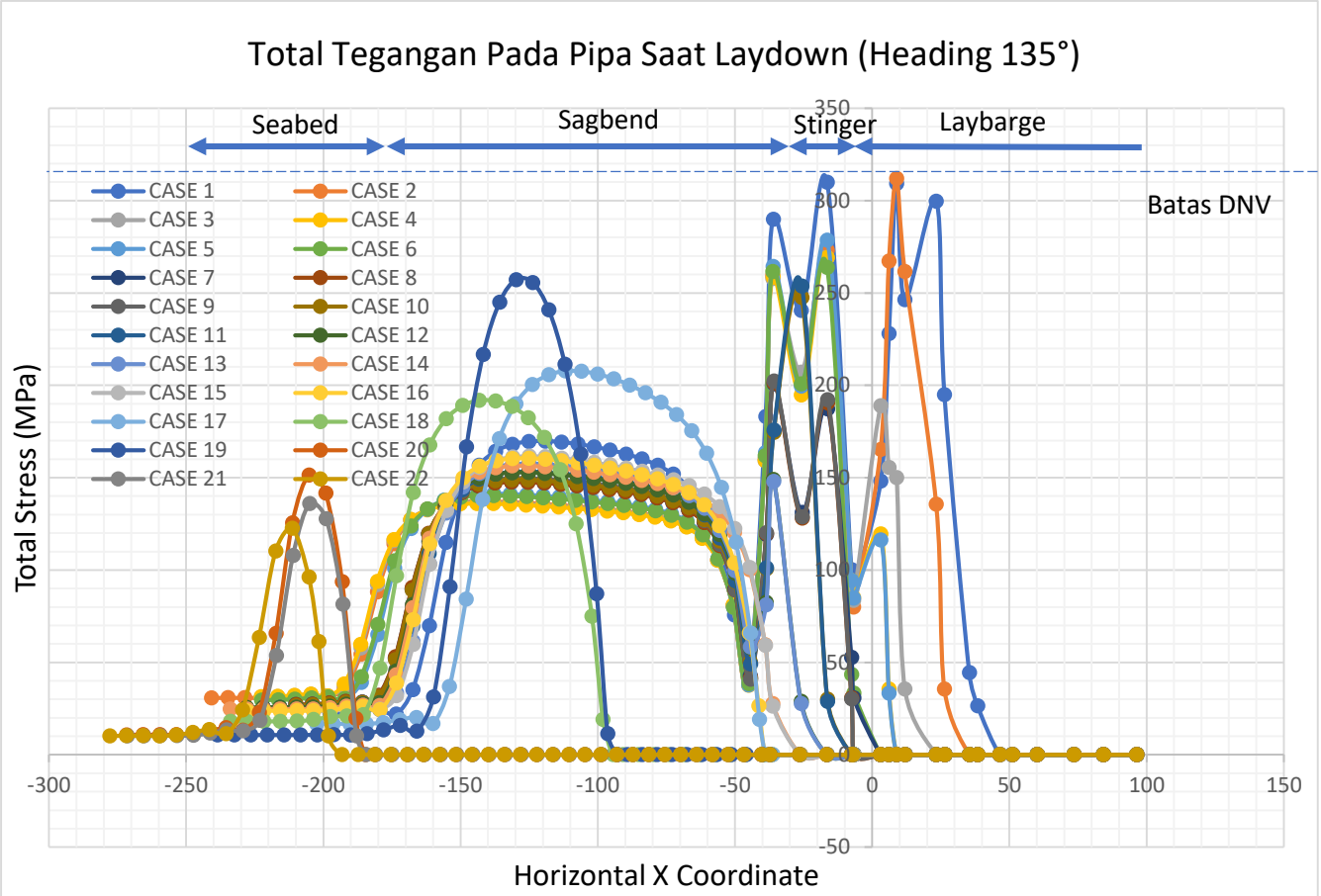

Gambar 4.51. Grafik Distribusi Tegangan Pada Tahap *Laydown* dengan Variasi *Tension* Pada Arah Pembebanan 135°

Dari Gambar 4.51 dapat disimpulkan bahwa nilai tegangan maksimum yang terjadi pada tahap *laydown* adalah sebesar 311,93 MPa yang terjadi pada *case* 2 dengan *horizontal distance* sebesar 8,89 m yang merupakan daerah *laybarge.*

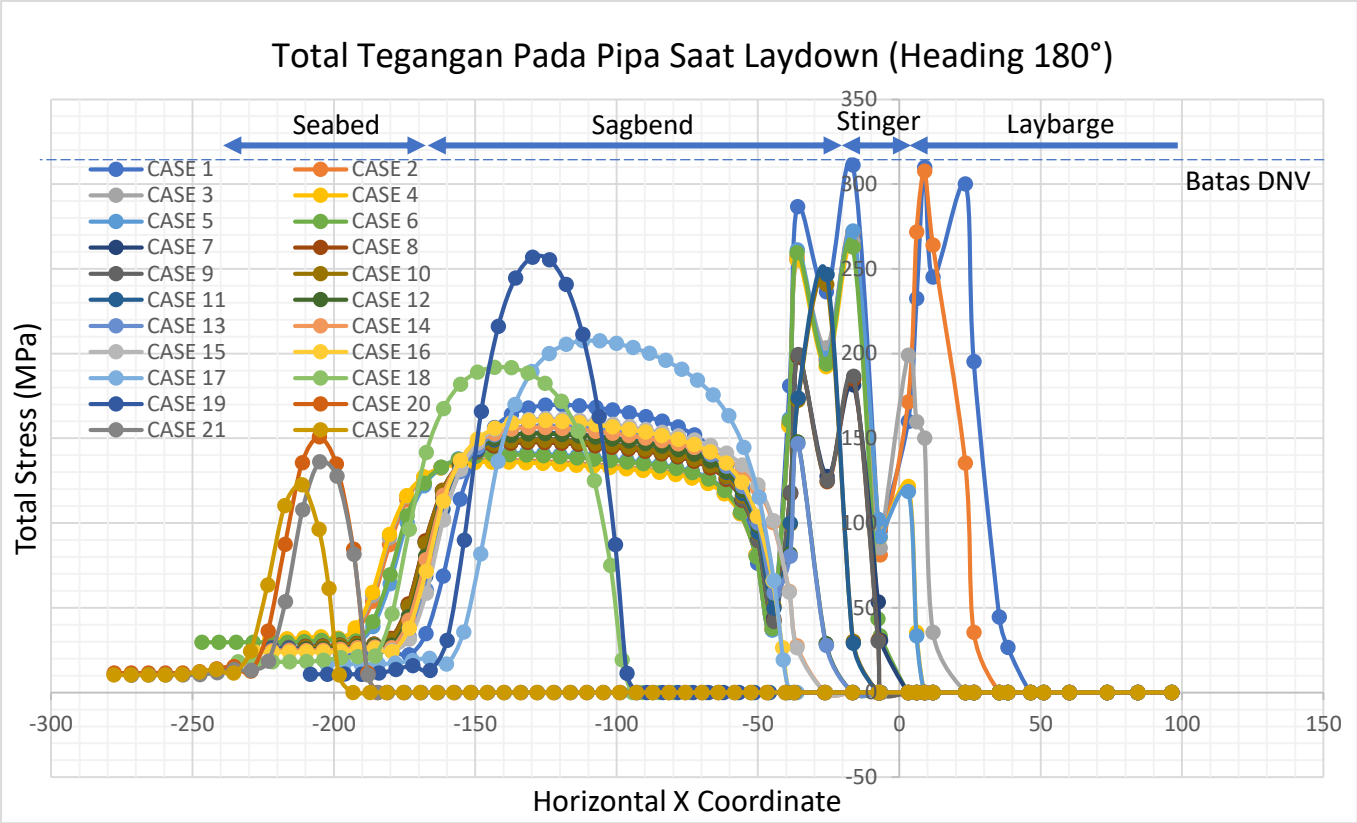

Gambar 4.52. Grafik Distribusi Tegangan Pada Tahap *Laydown* dengan Variasi *Tension* Pada Arah Pembebanan 180°

Dari Gambar 4.52 diatas diketahui bahwa pada tahap *laydown* dengan arah pembebanan 180° terjadi tegangan sebesar 311,11 MPa yang terjadi pada *case* 1 dengan jarak horizontal sebesar -16,43 m yang merupakan daerah *stinger*.

Kemudian pada analisis ini juga dilakukan perhitungan terhadap regangan yang terjadi selama tahap *laydown* dengan mempertimbangkan beban arus, gelombang, respon gerakan barge, serta variasi *tension* yang dianalisis sebelumnya. Hasil perhitungan regangan untuk tahap *laydown* dapat dilihat pada Tabel 4.26. Penyajian hasil analisis regangan dalam bentuk tabel ini dimaksudkan agar pembaca dapat mudah memahami dikarenakan nilai kenaikan regangan sangat kecil dan akan sulit dilihat apabila disajikan dalam bentuk grafik. Dari hasil analisis tersebut didapat bahwa nilai regangan yang terbesar terjadi pada arah pembebanan 180° dengan nilai sebesar 0,1863 %, lebih lengkapnya dapat dilihat pada Tabel 4.26 dibawah ini,

Tabel 4.26. Besaran Regangan Maksimum yang Terjadi Pada Tahap *Laydown*

Syarat Batas			Nilai bernilai maksimum pada *case*	Bagian daerah pipa	Kriteria DNV OS F101	
Arah Pembebanan	Tinggi Gelombang	*Peak Period*			Regangan Maksimum Saat *Overbend* (%)	
(deg)	(m)	(s)			Actual	Allowable
0	0,7	3,95	2	Laybarge	0,1849	0,26
45	0,7	3,95	2	Laybarge	0,1846	
90	0,8	4,22	2	Laybarge	0,1855	
135	0,7	3,95	2	Laybarge	0,1845	
180	0,7	3,95	2	Laybarge	0,1863	

4.7. Perhitungan Properti *Shackle* dan *Sling*

Dalam proses penurunan pipa diperlukan peralatan yang membantu dalam menurunkan pipa yang biasa disebut sebagai *rigging*. Peralatan tersebut biasanya terdiri dari *sling*, *shackle*, dan *winch*. Dalam menentukan properti dari tiap peralatan tersebut perlu dilakukan analisis agar saat peralatan tersebut digunakan tidak mengalami kegagalan. Karena itu, dalam perhitungan kali ini akan menggunakan aturan yang telah ditetapkan oleh DNV OS H205 seperti yang sudah dijelaskan pada sub bab 2.2.16.

4.7.1. Perhitungan Properti sling

Perhitungan properti sling dapat dilihat dalam pembahasan berikut,

Diketahui :

- F_{sling} = *Max. Tension Force* yang digunakan pada tahap *laydown*

  = 369,47 kN

- $\gamma_f = 1,3$
- $\gamma_c = 1,3$
- $\gamma_w = 1,1$
- $\gamma_m = 1,5$
- $\gamma_{tw} = 1,3$

- γ_s = 1,33, dengan ujung diasumsikan menggunakan *cable laid slings spliced*
- *Minimum Bending Diameter* = 0,156 m
- *Wire Rope Diameter* = 0,052 m

Jawab :

Menentukan *Reduction Factor* dengan membandingkan nilai terbesar dari γ_s *(End Termination Factor*) dan γ_b (*Bending Factor*)

$\gamma_b = 1/(1-0,5/(D/d)^{0,5})$

$= 1/(1-0,5/(0,156\ m/0,052\ m)^{0,5})$

$= 1,406$

$\gamma_s = 1,33$

Dari perhitungan diatas diketahui bahwa nilai dari *bending factor* lebih besar dari nilai *end termination factor*, maka yang akan digunakan untuk mendefinisikan *reduction factor* adalah *bending factor* dengan nilai sebesar 1,406.

Menghitung *Safety Factor*

Seperti pada Persamaan 2.47 dan 2.48, bahwa nilai γ_{sf} ditentukan dengan membandingkan nilai terbesar dari hasil perhitungan dengan menggunakan 2 persamaan tersebut.

$\gamma_{sf} = \gamma_f \cdot \gamma_c \cdot \gamma_r \cdot \gamma_w \cdot \gamma_m \cdot \gamma_{tw}$

$= 1,3 \cdot 1,3 \cdot 1,406 \cdot 1,1 \cdot 1,5 \cdot 1,3$

$= 5,096$

$\gamma_{sf} = 2,3 \cdot \gamma_r \cdot \gamma_w \cdot \gamma_{tw}$

$= 2,3 \cdot 1,406 \cdot 1,1 \cdot 1,3$

$= 4,623$

Dari hasil diatas dapat disimpulkan bahwa γsf akan bernilai 5,096 karena memiliki nilai lebih besar dari hasil perhitungan dengan menggunakan Persamaan 2.48

Menghitung MBL (*Minimum Breaking Load*) dari *slings*

Dari persamaan 2.46

$MBL > F_{sling} \cdot \gamma_{sf}$

$MBL > 369{,}47\ kN \cdot 5{,}096$

$MBL > 1883{,}4\ kN$

Menentukan Properti *Wire Rope* yang sesuai

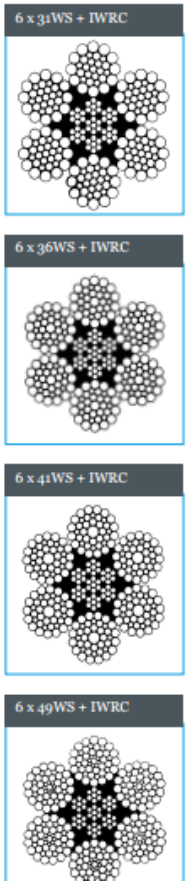

Nominal Diameter	Weight 100 m	Minimum Breaking Load 1,770 N/mm²		Minimum Breaking Load 1,960 N/mm²	
mm	kg	kN	kg	kN	kg
8	26.20	40.30	4,110	44.70	4,560
9	33.10	51.00	5,200	56.50	5,760
10	40.90	63.00	6,420	69.80	7,120
11	49.50	76.20	7,770	84.40	8,600
12	58.90	90.70	9,250	100.00	10,200
13	69.10	106.00	10,800	118.00	12,000
14	80.20	124.00	12,600	137.00	14,000
16	105.00	161.00	16,400	179.00	18,300
18	133.00	204.00	20,800	226.00	23,000
19	148.00	227.00	23,200	252.00	25,700
20	164.00	252.00	25,700	279.00	28,500
22	198.00	305.00	31,100	338.00	34,500
24	236.00	363.00	37,000	402.00	41,000
26	276.00	426.00	43,400	472.00	48,100
28	321.00	494.00	50,400	547.00	55,800
30	368.00	567.00	57,800	628.00	64,000
32	419.00	645.00	65,800	715.00	72,900
34	473.00	728.00	74,200	807.00	82,300
36	530.00	817.00	83,300	904.00	92,200
38	591.00	910.00	92,800	1,010.00	103,000
40	654.00	1,010.00	103,000	1,120.00	114,000
42	721.00	1,110.00	113,000	1,230.00	125,000
44	792.00	1,220.00	124,000	1,350.00	138,000
48	942.00	1,450.00	148,000	1,610.00	164,000
52	1,110.00	1,700.00	173,000	1,890.00	193,000
56	1,280.00	1,980.00	202,000	2,190.00	223,000

Dari katalog wire rope milik Hendrik Veder Group diketahui bahwa *wire rope* yang cocok digunakan adalah *wire rope* dengan konfigurasi 6x36WS + IWRC dengan MBL sebesar 1890 kN.

4.7.2. Perhitungan Properti Shackle

Shackle diperlukan untuk menyambungkan *sling/wire rope* dan sambungan pipa untuk nantinya diturunkan keatas *seabed*. Agar tidak terjadi kegagalan, penentuan jenis *shackle* harus diperhitungkan sesuai dengan aturan yang diatur oleh DNV OS H205 seperti pembahasan berikut,

Diketahui :

Beban dinamis = F_{sling} = 369,47 kN

Berat pipa di darat = 204,75 kg/m

Panjang bentangan pipa saat *Laydown* = 210 m

Jawab :

Menghitung *static hook load* (SHL)

Static Hook Load = Berat total pipa di darat

= 204,75 kg/m · 210 m

= 42998 kg

= 42,998 ton

Menentukan DAF (*Dynamic Amplification Factor*)

Nilai DAF bergantung pada nilai SHL yang akan dibawa, sesuai DNV OS H205 nilai DAF dapat dicari menggunakan persamaan dibawah ini,

SHL (Static Hook Load)	*DAF Onshore*	*DAF Inshore*	*DAF Offshore*
3[2] – 100 t	1.10	$1.07 + 0.05\sqrt{100/SHL}$	$1 + 0.25\sqrt{100/SHL}$
100 - 300 t	1.05	1.12	1.25
300 - 1000 t	1.05	1.10	1.20
1000 - 2500 t	1.03	1.08	1.15
> 2500 t	1.03	1.05	1.10

1) See Guidance Notes in [3.2.2.4].
2) For objects weighing less than 3 tonnes it is recommended to assume an object weight of 3 tonnes and use this throughout the calculations.
3) See [6.2.3.2] for recommendations to moving cranes onshore.

DAF = 1+0,25√100/SHL

= 1 + 0,25√100/42,998

= 1,38

Menentukan SWL (*Safe Working Load*) dari *Shackle*

Seperti yang dijelaskan pada sub bab 2.2.16 bahwa,

Beban Dinamis < SWL · DAF

Maka, SWL dapat didefinisikan sebagai berikut

SWL > Beban Dinamis / DAF

SWL > 369,47 kN / 1,38

SWL > 267,73 kN

SWL > 27,301 ton

Menghitung MBL (*Maximum Breaking Load*) dari *Shackle*

Pada sub bab 2.2.16 telah diterangkan bahwa,

Beban Dinamis < MBL/3.0

Atau dapat berarti,

MBL > Beban Dinamis · 3.0

MBL > 369,47 kN · 3.0

MBL > 113,0268 ton

***Menentukan Properti* Shackle**

Crosby® G-2140CT COLD TUFF® Shackles

Nominal Shackle Size (in.)	Working Load Limit (t)	G-2140CT Stock No.	Weight Each (lbs.)	Dimensions (in.) A	B	C	D	E	F	H	L	N	P	Tolerance + / - A	C
1-1/2	30	1260801	20.8	2.38	1.63	5.75	1.54	3.88	3.62	10.00	6.88	1.62	7.73	.13	.25
2	55	1260823	52.0	3.25	2.25	7.75	2.08	5.75	4.81	13.68	10.16	2.40	10.41	.13	.25
2-1/2	85	1260834	96.0	4.12	2.75	10.50	2.72	7.25	5.69	17.84	12.87	3.12	13.58	.25	.25
3	120	1260843	178.0	5.00	3.25	13.00	3.11	7.88	6.50	21.50	14.36	3.63	15.13	.25	.25
3-1/2	† 150	1260852	265.0	5.25	3.75	14.63	3.62	9.00	8.00	24.62	16.50	4.12	17.62	.25	.25
4	† 175	1260861	338.0	5.50	4.25	14.5	4.10	10.00	9.00	25.69	18.42	4.56	20.37	.25	.25
4-3/4	† 200	1260870	450.0	7.25	4.75	15.63	4.50	11.00	10.50	29.25	21.00	6.00	21.21	.25	.25
5	† 250	1260889	600.0	8.50	5.00	20.00	4.50	13.00	12.00	35.00	24.50	6.50	22.68	.25	.25

Bolt Type Anchor shackle with thin head bolt - nut with cotter pin. Meets the performance requirements of Federal Specification RR-C-271F Type IVA, Grade A, Class 3, except for those provisions required of the contractor. For additional information, see page 468.

**** NOTE: Maximum Proof Load is 2.0 times the Working Load Limit. 30t - 175t, Minimum Ultimate Load is 5.4 times the Working Load Limit. 200t and larger, Minimum Ultimate Load is 4 times the Working Load Limit. † Furnished with Round Head Bolts with welded handle. For Working Load Limit reduction due to side loading applications, see page 94.***

Dari katalog milik Crosby diketahui bahwa besaran MBL sama dengan 4 kali dari WLL (*Working Load Limit*). Oleh karena itu, dapat diketahui besaran WLL yang dibutuhkan dengan perhitungan sebagai berikut,

$$MBL = 4 \cdot WLL$$

$$WLL = MBL / 4$$

$$= 113{,}0268 \text{ ton} / 4$$

$$= 28{,}25 \text{ ton}$$

Berdasarkan perhitungan yang telah dilakukan didapat nilai WLL untuk *shackle* adalah sebesar 28,25 ton. Sesuai dengan katalog milik Crosby jenis *shackle* yang dapat digunakan adalah G-2140CT dengan WLL sebesar 30 ton.

(Halaman ini sengaja dikosongkan)

BAB 5 PENUTUP

5.1. Kesimpulan

Berdasarkan hasil analisis dan pembahasan yang dilakukan pada bab sebelumnya, maka dapat ditarik kesimpulan mengenai penelitian tugas akhir ini :

1. Amplitudo respon gerakan *pipelaying barge* DLB 01 pada gelombang irreguler dengan spektrum JONSWAP dan gelombang yang terjadi merupakan gelombang signifikan untuk gerakan surge terbesar terjadi pada arah pembebanan 0° dan 45° dengan nilai yang sama sebesar 0,0045 m. Gerakan *sway* mengalami amplitudo respon terbesar pada arah pembebanan 90° dengan nilai sebesar 0,024 m. Lalu untuk gerakan *heave* nilai respon gerakan *barge* terbesar terjadi pada arah pembebanan 90° dengan nilai sebesar 0,013 m. Sedangkan pada gerakan rotasi *roll* mengalami respon terbesar terjadi pada arah pembebanan 90° dengan nilai sebesar 0,039 m. Kemudian untuk gerakan *pitch* mengalami respon gerakan sebesar 0,004 m yang terjadi pada arah 180°. Terakhir untuk gerakan *yaw* mengalami respon gerakan maksimum pada arah pembebanan 45° dengan nilai sebesar 0,002.
2. Pada analisis statis untuk tahap *initiation* nilai regangan terbesar terjadi pada *case* 19 dengan nilai sebesar 0,1977, nilai ini memenuhi aturan yang ditetapkan oleh DNV OS F101 yaitu sebesar 0,205 %. Sedangkan nilai tegangan terbesar pada ujung *stinger* terjadi pada *case* 20 dengan nilai sebesar 58,27 % dari SMYS pipa dan tegangan terbesar pada daerah *sagbend* terjadi pada *case* 19 dengan besaran mencapai 38,37 % dari SMYS pipa, nilai yang sudah disebutkan juga memenuhi kriteria yang ditetapkan oleh DNV OS F101 yaitu sebesar 72% dari SMYS pipa.
3. Pada analisis statis untuk tahap *laydown* nilai regangan terbesar terjadi pada *case* 2 dengan nilai sebesar 0,1855%, nilai ini memenuhi aturan yang ditetapkan oleh DNV OS F101 yaitu sebesar 0,205 %. Sedangkan nilai tegangan terbesar pada ujung *stinger* terjadi pada *case* 6 dengan nilai sebesar 43,48 % dari SMYS pipa dan tegangan terbesar pada daerah *sagbend* terjadi pada *case* 19 dengan besaran mencapai 70,85 % dari

SMYS pipa, nilai yang sudah disebutkan juga memenuhi kriteria yang ditetapkan oleh DNV OS F101 yaitu sebesar 72% dari SMYS pipa.

4. Pada analisis dinamis untuk tahap *initiation* nilai regangan terbesar terjadi pada arah pembebanan 135° tepatnya pada *case* 18 dengan nilai sebesar 0,2372 %, nilai ini memenuhi aturan yang ditetapkan oleh DNV OS F101 yaitu sebesar 0,260 %. Sedangkan nilai tegangan terbesar pada ujung *stinger* terjadi pada arah pembebanan 135° tepatnya pada *case* 21 dengan nilai sebesar 60,17 % dari SMYS pipa dan tegangan terbesar pada daerah *sagbend* terjadi pada arah pembebanan 45° tepatnya pada *case* 17 dengan besaran mencapai 38,71 % dari SMYS pipa. Nilai tegangan pipa yang terbesar dari tiap *pipe section* terjadi pada arah pembebanan 0° dengan nilai sebesar 312,83 MPa, nilai yang sudah disebutkan sangat kritis, namun memenuhi kriteria yang ditetapkan oleh DNV OS F101 yaitu sebesar 87% dari SMYS pipa atau bernilai sama dengan 313,2 MPa.
5. Pada analisis dinamis untuk tahap *laydown* nilai regangan terbesar terjadi pada arah pembebanan 180° tepatnya pada *case* 2 dengan nilai sebesar 0,1863 %, nilai ini memenuhi aturan yang ditetapkan oleh DNV OS F101 yaitu sebesar 0,260 %. Sedangkan nilai tegangan terbesar pada ujung *stinger* terjadi pada arah pembebanan 135° tepatnya pada *case* 1 dengan nilai sebesar 50,86 % dari SMYS pipa dan tegangan terbesar pada daerah *sagbend* terjadi pada arah pembebanan 135° tepatnya pada *case* 19 dengan besaran mencapai 71,42 % dari SMYS pipa. Nilai tegangan pipa yang terbesar dari tiap *pipe section* yang terjadi pada arah pembebanan 0° dengan nilai sebesar 312,82 MPa, nilai yang sudah disebutkan sangat kritis, namun memenuhi kriteria yang ditetapkan oleh DNV OS F101 yaitu sebesar 87% dari SMYS pipa atau sama dengan 313,2 MPa.
6. *Sling* yang akan digunakan dalam tahap *laydown* adalah *sling* yang memiliki nilai *minimum breaking load* sebesar 1890 kN dan *shackle* yang akan digunakan untuk tahap *laydown* adalah *shackle* yang memiliki *working load limit* sebesar 30 ton.

5.2. Saran

Saran yang dapat diberikan oleh penulis untuk penelitian selanjutnya yaitu:

1. Diperlukan analisis besaran *tension* yang dibutuhkan saat laying dengan mempertimbangkan respon gerakan *laybarge*.
2. Dibutuhkan analisis lebih lanjut untuk menghitung besarnya *offset* dari *barge* yang diperbolehkan saat proses *initiation* dan *laydown*.

(Halaman ini sengaja dikosongkan)

DAFTAR PUSTAKA

Bai, Qiang., Bai, Yong. 2014. *Subsea Pipeline Design, Analysis, and Installation*. Oxford : Elsevier

Clement, Chima. 2015. "Offshore Heavy Lift Design and Operations: Sling Tension in Heavy Lifts with Quadruple Sling Arrangement". *University of Aberdeen*. Hal 1-28.

DNV-OS-F101. 2013. *Submarine Pipeline Systems*. Det Norske Veritas AS. Norway

DNV-OS-H101. 2011. *General Marine Operations*. Det Norske Veritas AS. Norway

DNV-OS-H205. 2014. *Lifting Operations*. Det Norske Veritas AS. Norway

DNV-RP-C205. 2010. *Environmental Conditions and Environmental Loads*. Det Norske Veritas AS. Norway

Febrianti. 2017. *Analisis Local Buckling Pipa Bawah Laut 20 inch Pada Saat Instalasi dengan Metode S-Lay di Blok DA dan BH, Selat Madura*. Tugas Akhir, Departemen Teknik Kelautan -FTK, Institut Teknologi Sepuluh Nopember. Surabaya.

Gong, Shunfeng dan Xu, Pu. 2016. "The influence of sea state on dynamic behaviour of offshore pipelines for deepwater S-lay". *Journal of Ocean Engineering*. 111 : 398-413.

Hasselmann K., *et al*. "Measurements of wind-wave growth and swell decay during the Joint North Sea Wave Project (JONSWAP)". *Ergnzungsheft zur Deutschen Hydrographischen Zeitschrift Reihe*, A(8) (Nr. 12), p.95, 1973.

Irsyad, Fauzanullah Rafif. 2017. *Analisis Concrete Crushing dan Concrete Sliding Pada Pipeline Saat Instalasi Dengan Metode S-lay*. Tugas Akhir, Departemen Teknik Kelautan -FTK, Institut Teknologi Sepuluh Nopember. Surabaya.

Jr, Robert C. Malahy, 2013. User's Guide version 3.0 by OFFPIPE. (RCM). Houston, Texas, USA.

Lewis, Edward V. 1989. *Principles Of Naval Architecture*. The Society of Naval Architects and Marine Engineers. USA

Liang, Hui., Yue, Qianjin,. Lim, Gerry,. Palmer, Andrew C. 2018. "Study on the contact behavior of pipe and rollers in deep S-lay". *Journal of Ocean Research*. 72 : 1-11.

MOSES, 2013. An Introduction to MOSES. Exton, USA. Bentley Systems

O'Grady, Robert dan Harte, Annette. 2013. "Localised assessment of pipeline integrity during ultra-deep S-lay installation". *Journal of Ocean Engineering*. 68 : 27-37.

Palmer, Andrew C., King, Roger A. 2008. *Subsea Pipeline Engineering 2nd Edition*. Oklahoma : PennWell.

Panambang, Muhammad A. 2007. *Analisis Tegangan Pada Pipa Bawah Laut Akibat Gerakan Lay-Barge Pada Saat Laying dengan Berdasarkan Ranah Frekuensi*. Tugas Akhir, Departemen Teknik Kelautan -FTK, Institut Teknologi Sepuluh Nopember. Surabaya.

Romadhoni. 2016. *Analisis Olah Gerak Kapal di Gelombang Reguler Pada Kapal Tipe Axe Bow*. Tugas Akhir, Jurusan Teknik Perkapalan, Politeknik Negeri Bengkalis. Riau.

Soegiono. 2007. *Pipa Laut*. Teknik Kelautan Institut Teknologi Sepuluh Nopember. Surabaya

Trevor Jee Associates. 2004. *Offshore Pipeline Construction*. Trevor Jee Associates. England

Xie, Peng., Zhao, Yan., Yue, Qianjin., Palmer, Andrew C. 2015. "Dynamic loading history and collapse analysis of the pipe during deepwater S-lay operation". *Journal of Marine Structures*. 40 : 183-192.

LAMPIRAN A
HASIL OUTPUT SOFTWARE MOSES
(HYDROSTATIC PROPERTIES)

```
*****************************************************************************************************
*                                          ***  MOSES   ***                                         *
*                                          ----------------                    January 17, 2019     *
*          Pipe Laying Barge DLB 01 Model by Zaki                                                   *
*          Hydrostatic Properties Of DLB01                                                          *
*                                                                                                   *
*****************************************************************************************************
```

+++ H Y D R O S T A T I C P R O P E R T I E S +++

For Body DLB01

Process is DEFAULT: Units Are Degrees, Meters, and M-Tons Unless Specified

/--- Condition ---/			/- Displac-/	/-- Center Of Buoyancy --/			/ W.P. /	/C. Flotation /		/---- Metacentric Heights ----/			
Draft	Trim	Roll	M-Tons	---X---	---Y---	---Z---	Area	---X---	---Y---	-KMT-	-KML-	-BMT-	-BML-
0.00	0.50	0.00	1167.43	89.84	0.00	0.50	2775.529	77.13	-0.00	173.56	1857.64	173.06	1857.13
0.10	0.50	0.00	1464.38	86.96	0.00	0.54	3007.637	74.37	-0.00	159.70	1702.36	159.16	1701.81
0.20	0.50	0.00	1781.52	84.52	-0.00	0.59	3172.003	72.38	-0.00	145.98	1542.23	145.39	1541.64
0.30	0.50	0.00	2112.32	82.51	-0.00	0.63	3274.215	71.05	-0.00	131.58	1391.05	130.95	1390.42
0.40	0.50	0.00	2450.50	80.87	-0.00	0.68	3319.543	70.39	-0.00	116.05	1243.97	115.37	1243.29
0.50	0.50	0.00	2792.21	79.56	-0.00	0.73	3348.812	69.94	-0.00	102.86	1120.70	102.14	1119.98
0.60	0.50	0.00	3136.75	78.47	-0.00	0.77	3375.576	69.53	-0.00	92.37	1021.64	91.59	1020.87
0.70	0.50	0.00	3483.99	77.56	-0.00	0.82	3401.353	69.13	-0.00	83.90	940.76	83.08	939.94
0.80	0.50	0.00	3833.83	76.77	-0.00	0.87	3426.281	68.75	-0.00	76.93	873.40	76.06	872.53
0.90	0.50	0.00	4186.19	76.08	-0.00	0.92	3450.433	68.38	-0.00	71.11	816.32	70.19	815.40
1.00	0.50	0.00	4540.99	75.46	-0.00	0.97	3473.845	68.03	-0.00	66.18	767.27	65.21	766.30
1.10	0.50	0.00	4898.15	74.90	-0.00	1.02	3496.668	67.69	-0.00	61.97	724.65	60.95	723.63
1.20	0.50	0.00	5257.63	74.39	-0.00	1.07	3518.917	67.35	-0.00	58.33	687.23	57.27	686.16
1.30	0.50	0.00	5619.22	73.93	-0.00	1.12	3539.814	67.04	-0.00	55.13	653.78	54.02	652.67
1.40	0.50	0.00	5982.81	73.50	-0.00	1.17	3552.655	66.85	-0.00	52.12	620.63	50.96	619.46
1.50	0.50	0.00	6347.40	73.11	-0.00	1.22	3563.041	66.69	-0.00	49.41	590.06	48.20	588.84
1.60	0.50	0.00	6713.04	72.76	-0.00	1.27	3573.319	66.53	-0.00	46.99	562.71	45.73	561.44
1.70	0.50	0.00	7079.73	72.43	-0.00	1.32	3583.491	66.38	-0.00	44.82	538.09	43.51	536.77
1.80	0.50	0.00	7447.46	72.12	-0.00	1.37	3593.555	66.22	-0.00	42.86	515.81	41.50	514.44

1.90	0.50	0.00	7816.21	71.84	-0.00	1.42	3603.511	66.07	-0.00	41.09	495.54	39.67	494.13
2.00	0.50	0.00	8185.98	71.58	-0.00	1.47	3613.362	65.92	-0.00	39.47	477.03	38.00	475.56
2.10	0.50	0.00	8556.76	71.33	-0.00	1.52	3623.109	65.78	-0.00	37.99	460.04	36.48	458.52
2.20	0.50	0.00	8928.52	71.09	-0.00	1.57	3632.759	65.63	-0.00	36.64	444.40	35.07	442.83
2.30	0.50	0.00	9301.27	70.87	-0.00	1.62	3642.337	65.48	-0.00	35.39	429.96	33.77	428.34
2.40	0.50	0.00	9675.00	70.65	-0.00	1.67	3651.845	65.34	-0.00	34.24	416.58	32.57	414.91
2.50	0.50	0.00	10049.70	70.45	0.00	1.72	3661.280	65.20	0.00	33.18	404.15	31.46	402.43
2.60	0.50	0.00	10425.37	70.26	-0.00	1.77	3670.632	65.05	-0.00	32.19	392.57	30.43	390.80
2.70	0.50	0.00	10801.99	70.07	-0.00	1.82	3679.898	64.91	-0.00	31.28	381.74	29.46	379.92
2.80	0.50	0.00	11179.55	69.90	-0.00	1.87	3689.054	64.78	-0.00	30.43	371.60	28.56	369.73
2.90	0.50	0.00	11558.01	69.73	-0.00	1.92	3697.218	64.65	-0.00	29.62	361.83	27.70	359.91
3.00	0.50	0.00	11937.28	69.56	-0.00	1.97	3705.071	64.53	-0.00	28.86	352.59	26.89	350.62
3.10	0.50	0.00	12317.34	69.40	-0.00	2.02	3712.876	64.41	-0.00	28.16	343.90	26.13	341.88
3.20	0.50	0.00	12698.21	69.25	-0.00	2.07	3720.634	64.30	-0.00	27.49	335.71	25.42	333.64
3.30	0.50	0.00	13079.87	69.10	-0.00	2.12	3728.341	64.18	-0.00	26.86	327.97	24.74	325.85
3.40	0.50	0.00	13462.32	68.96	-0.00	2.17	3735.968	64.06	-0.00	26.27	320.65	24.10	318.48
3.50	0.50	0.00	13845.55	68.82	-0.00	2.22	3743.503	63.95	-0.00	25.72	313.70	23.50	311.47
3.60	0.50	0.00	14229.54	68.69	-0.00	2.27	3750.945	63.84	-0.00	25.19	307.09	22.92	304.82
3.70	0.50	0.00	14614.28	68.56	-0.00	2.33	3758.293	63.73	-0.00	24.70	300.80	22.37	298.48
3.80	0.50	0.00	14999.78	68.43	-0.00	2.38	3765.548	63.62	-0.00	24.23	294.81	21.85	292.44
3.90	0.50	0.00	15386.01	68.31	-0.00	2.43	3772.708	63.51	-0.00	23.79	289.10	21.36	286.67
4.00	0.50	0.00	15772.98	68.19	-0.00	2.48	3779.773	63.40	-0.00	23.37	283.63	20.89	281.15
4.10	0.50	0.00	16160.66	68.07	-0.00	2.53	3786.731	63.29	-0.00	22.97	278.41	20.44	275.88
4.20	0.50	0.00	16549.05	67.96	-0.00	2.58	3793.581	63.19	-0.00	22.59	273.40	20.01	270.82
4.30	0.50	0.00	16938.15	67.84	-0.00	2.63	3800.435	63.09	-0.00	22.23	268.61	19.60	265.98
4.40	0.50	0.00	17327.92	67.74	-0.00	2.68	3806.998	62.99	-0.00	21.88	263.98	19.20	261.30
4.50	0.50	0.00	17718.36	67.63	-0.00	2.73	3813.271	62.89	-0.00	21.55	259.50	18.82	256.76
4.60	0.50	0.00	18109.43	67.52	-0.00	2.78	3819.283	62.80	-0.00	21.24	255.15	18.46	252.37
4.70	0.50	0.00	18501.11	67.42	-0.00	2.84	3825.352	62.71	-0.00	20.94	251.00	18.11	248.16

```
*****************************************************************************************************
*                                          ***  MOSES   ***                                         *
*                                          ----------------                      January 17, 2019   *
*          Pipe Laying Barge DLB 01 Model by Zaki                                                   *
*          Hydrostatic Properties Of DLB01                                                          *
*                                                                                                   *
*****************************************************************************************************
```

+++ H Y D R O S T A T I C C O E F F I C I E N T S +++

For Body DLB01

Process is DEFAULT: Units Are Degrees, Meters, and M-Tons Unless Specified

/--- Condition ---/			Displacement	Wetted Surface	Load To Change Draft 1 MM	/--- For KG = KB ----/ Moment To Change .01 Deg	
Draft	Trim	Roll				--- Heel ---	--- Trim ---
0.00	0.50	0.00	1167.43	2826.3	2.84	35.26	378.40
0.10	0.50	0.00	1464.38	3073.7	3.08	40.68	434.95
0.20	0.50	0.00	1781.52	3255.7	3.25	45.21	479.35
0.30	0.50	0.00	2112.32	3377.8	3.36	48.28	512.61
0.40	0.50	0.00	2450.50	3445.1	3.40	49.34	531.75
0.50	0.50	0.00	2792.21	3497.2	3.43	49.77	545.80
0.60	0.50	0.00	3136.75	3547.0	3.46	50.14	558.89
0.70	0.50	0.00	3483.99	3595.9	3.49	50.52	571.55
0.80	0.50	0.00	3833.83	3644.1	3.51	50.89	583.83
0.90	0.50	0.00	4186.19	3691.6	3.54	51.28	595.75
1.00	0.50	0.00	4540.99	3738.5	3.56	51.68	607.33
1.10	0.50	0.00	4898.15	3785.0	3.58	52.11	618.62
1.20	0.50	0.00	5257.63	3830.9	3.61	52.55	629.65
1.30	0.50	0.00	5619.22	3875.6	3.63	52.98	640.10
1.40	0.50	0.00	5982.81	3912.7	3.64	53.21	646.84
1.50	0.50	0.00	6347.40	3947.4	3.65	53.39	652.34
1.60	0.50	0.00	6713.04	3982.1	3.66	53.58	657.81
1.70	0.50	0.00	7079.73	4016.8	3.67	53.76	663.26

1.80	0.50	0.00	7447.46	4051.5	3.68	53.94	668.69
1.90	0.50	0.00	7816.21	4086.1	3.69	54.12	674.08
2.00	0.50	0.00	8185.98	4120.7	3.70	54.30	679.44
2.10	0.50	0.00	8556.76	4155.3	3.71	54.47	684.77
2.20	0.50	0.00	8928.52	4189.9	3.72	54.65	690.08
2.30	0.50	0.00	9301.27	4224.5	3.73	54.83	695.36
2.40	0.50	0.00	9675.00	4259.0	3.74	55.00	700.63
2.50	0.50	0.00	10049.70	4293.6	3.75	55.18	705.87
2.60	0.50	0.00	10425.37	4328.1	3.76	55.36	711.08
2.70	0.50	0.00	10801.99	4362.6	3.77	55.54	716.27
2.80	0.50	0.00	11179.55	4397.1	3.78	55.72	721.41
2.90	0.50	0.00	11558.01	4430.8	3.79	55.88	726.03
3.00	0.50	0.00	11937.28	4464.2	3.80	56.03	730.50
3.10	0.50	0.00	12317.34	4497.6	3.80	56.18	734.97
3.20	0.50	0.00	12698.21	4531.1	3.81	56.33	739.43
3.30	0.50	0.00	13079.87	4564.5	3.82	56.48	743.87
3.40	0.50	0.00	13462.32	4598.0	3.83	56.63	748.29
3.50	0.50	0.00	13845.55	4631.4	3.84	56.78	752.68
3.60	0.50	0.00	14229.54	4664.8	3.84	56.92	757.02
3.70	0.50	0.00	14614.28	4698.2	3.85	57.07	761.32
3.80	0.50	0.00	14999.78	4731.6	3.86	57.21	765.58
3.90	0.50	0.00	15386.01	4765.0	3.87	57.36	769.81
4.00	0.50	0.00	15772.98	4798.3	3.87	57.50	773.99
4.10	0.50	0.00	16160.66	4831.6	3.88	57.65	778.13
4.20	0.50	0.00	16549.05	4864.9	3.89	57.79	782.21
4.30	0.50	0.00	16938.15	4898.2	3.89	57.93	786.31
4.40	0.50	0.00	17327.92	4931.4	3.90	58.07	790.25
4.50	0.50	0.00	17718.36	4964.3	3.91	58.20	794.02
4.60	0.50	0.00	18109.43	4997.1	3.91	58.33	797.66
4.70	0.50	0.00	18501.11	5030.0	3.92	58.46	801.33

LAMPIRAN B

HASIL OUTPUT MOSES

(RAO DAN MOTION STATISTICS)

```
*****************************************************************************************************
*                                                *** MOSES ***                                      *
*                                                ---------------                  February 10, 2019  *
*          Response Amplitude Operator Of Barge DLB 01                                              *
*                                                                                                   *
*   Draft            =   4.7 Meters      Trim Angle       =   0.50 Deg.     GMT              =  12.9 Meters *
*   Roll Gy. Radius  =  10.3 Meters      Pitch Gy. Radius =  78.8 Meters    Yaw Gy. Radius   =  78.8 Meters *
*   Heading          =   0.00 Deg.       Forward Speed    =  0.00 Knots     Linearization Based on 1/ 20    *
*                                                                                                   *
*****************************************************************************************************
```

+++ M O T I O N R E S P O N S E O P E R A T O R S +++

Results are in Body System

Of *LCOG On Body DLB01 At X = 63.3 Y = 0.0 Z = 8.0

Process is DEFAULT: Units Are Degrees, Meters, and KN Unless Specified

E N C O U N T E R		Surge / Wave Ampl.		Sway / Wave Ampl.		Heave / Wave Ampl.		Roll / Wave Ampl.		Pitch / Wave Ampl.		Yaw / Wave Ampl.	
Frequency -(Rad/Sec)-	Period -(Sec)-	Ampl.	Phase	Ampl.	Phase	Ampl.	Phase	Ampl.	Phase	Ampl.	Phase	Ampl.	Phase
0.1000	62.81	1.488	137	0.042	52	0.990	4	0.000	0	0.050	-83	0.048	-175
0.2000	31.42	1.201	107	0.010	-68	0.990	15	0.003	121	0.255	-76	0.010	110
0.3000	20.94	0.982	125	0.004	114	0.957	32	0.007	119	0.653	-63	0.003	141
0.4000	15.71	0.836	152	0.007	129	0.874	55	0.012	128	1.340	-54	0.003	-168
0.5000	12.57	0.651	-168	0.008	154	0.706	82	0.015	135	1.754	-55	0.003	-127
0.6000	10.47	0.415	-120	0.006	-173	0.414	109	0.016	145	1.243	-47	0.003	-91
0.7000	8.98	0.135	-57	0.004	-136	0.095	112	0.019	154	0.572	-20	0.003	-52
0.8000	7.85	0.105	133	0.002	-73	0.167	18	0.014	102	0.145	11	0.002	-11
0.9000	6.98	0.164	-146	0.000	0	0.139	35	0.009	-4	0.067	-46	0.001	40
1.0000	6.28	0.075	-57	0.001	-158	0.050	-12	0.007	0	0.062	-11	0.000	0
1.1000	5.71	0.056	161	0.001	-100	0.053	0	0.004	9	0.024	-40	0.000	0
1.2000	5.24	0.068	-86	0.000	0	0.014	-34	0.003	11	0.034	-5	0.000	0

1.3001	4.83	0.024	119	0.000	0	0.027	-4	0.002	48	0.009	-47	0.000	0
1.4000	4.49	0.041	-80	0.001	-56	0.012	14	0.052	-155	0.016	-12	0.001	-51
1.4999	4.19	0.020	147	0.000	0	0.018	21	0.005	-18	0.009	-15	0.000	0
1.6000	3.93	0.021	-29	0.000	0	0.009	29	0.002	101	0.017	54	0.000	0
1.7000	3.70	0.020	-133	0.000	0	0.011	69	0.002	81	0.011	37	0.000	0
1.7998	3.49	0.010	108	0.000	0	0.006	33	0.002	-63	0.003	65	0.000	0
1.9000	3.31	0.011	-17	0.000	0	0.003	69	0.001	-175	0.006	77	0.000	0
1.9997	3.14	0.011	-88	0.000	0	0.004	75	0.000	0	0.006	55	0.000	0
2.1000	2.99	0.007	-150	0.000	0	0.001	51	0.000	0	0.002	30	0.000	0
2.2000	2.86	0.005	142	0.000	0	0.005	48	0.000	0	0.006	50	0.000	0
2.2998	2.73	0.004	87	0.000	0	0.003	39	0.000	0	0.003	36	0.000	0
2.4000	2.62	0.004	51	0.000	0	0.004	106	0.000	0	0.004	101	0.000	0
2.5000	2.51	0.003	34	0.000	0	0.002	74	0.001	-169	0.003	57	0.000	0

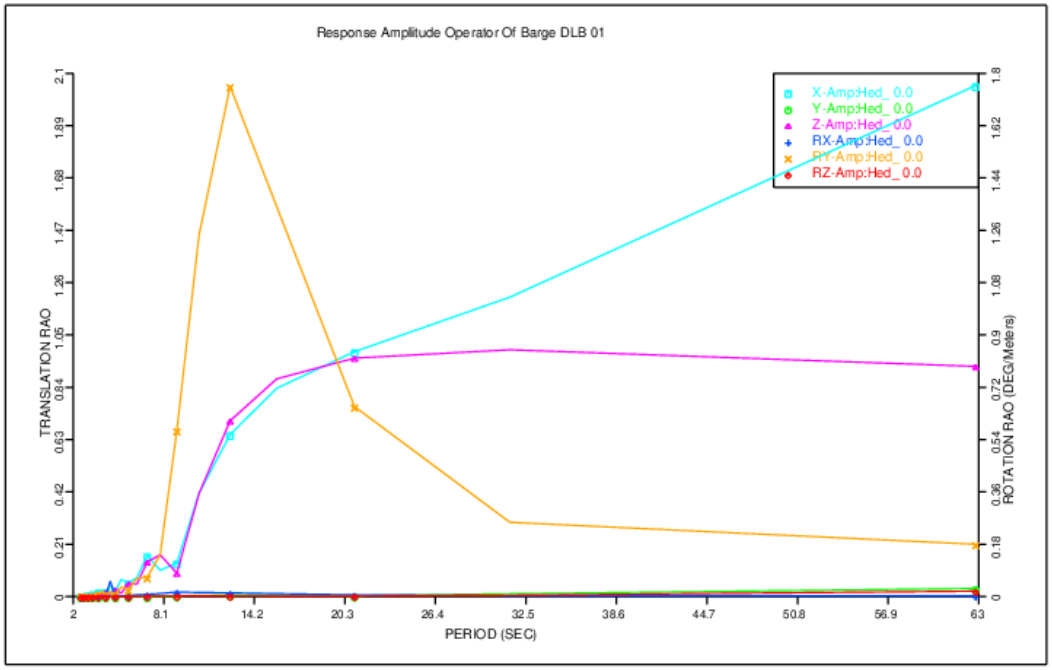

```
*****************************************************************************************************
*                                                *** MOSES ***                                      *
*                                                ---------------                  February 10, 2019  *
*          Response Amplitude Operator Of Barge DLB 01                                              *
*                                                                                                   *
*   Draft            =   4.7 Meters      Trim Angle       =   0.50 Deg.     GMT              =  12.9 Meters *
*   Roll Gy. Radius  =  10.3 Meters      Pitch Gy. Radius =  78.8 Meters    Yaw Gy. Radius   =  78.8 Meters *
*   Heading          =  45.00 Deg.       Forward Speed    =  0.00 Knots     Linearization Based on 1/ 20    *
*                                                                                                   *
*****************************************************************************************************
```

+++ M O T I O N R E S P O N S E O P E R A T O R S +++

Results are in Body System

Of *LCOG On Body DLB01 At X = 63.3 Y = 0.0 Z = 8.0

Process is DEFAULT: Units Are Degrees, Meters, and KN Unless Specified

E N C O U N T E R		Surge / Wave Ampl.		Sway / Wave Ampl.		Heave / Wave Ampl.		Roll / Wave Ampl.		Pitch / Wave Ampl.		Yaw / Wave Ampl.	
Frequency -(Rad/Sec)-	Period -(Sec)-	Ampl.	Phase	Ampl.	Phase	Ampl.	Phase	Ampl.	Phase	Ampl.	Phase	Ampl.	Phase
0.1000	62.81	1.099	132	0.818	108	0.993	3	0.048	93	0.037	-83	0.121	-44
0.2000	31.42	0.821	102	0.826	104	0.994	10	0.159	98	0.180	-80	0.039	-115
0.3000	20.94	0.690	115	0.716	115	0.976	22	0.356	110	0.466	-72	0.059	-147
0.4000	15.71	0.615	134	0.635	133	0.935	39	0.600	125	1.002	-69	0.098	-138
0.5000	12.57	0.530	161	0.534	158	0.856	59	0.805	144	1.440	-80	0.138	-117
0.6000	10.47	0.434	-165	0.399	-171	0.685	80	0.950	166	1.146	-81	0.163	-89
0.7000	8.98	0.296	-128	0.238	-134	0.428	100	0.915	179	0.700	-60	0.162	-53
0.8000	7.85	0.134	-81	0.092	-77	0.135	106	0.444	92	0.361	-25	0.130	-10
0.9000	6.98	0.030	65	0.002	-136	0.098	-3	0.684	2	0.143	15	0.082	42
1.0000	6.28	0.097	169	0.068	-156	0.113	13	0.449	14	0.026	10	0.031	100
1.1000	5.71	0.098	-125	0.068	-98	0.044	50	0.206	19	0.044	-18	0.010	-21
1.2000	5.24	0.040	-47	0.024	-37	0.012	-15	0.180	14	0.033	35	0.026	48

1.3001	4.83	0.032	155	0.016	-134	0.021	24	0.131	45	0.006	63	0.016	120
1.4000	4.49	0.047	-111	0.023	-61	0.013	74	0.047	58	0.009	17	0.001	57
1.4999	4.19	0.016	5	0.004	12	0.006	33	0.068	65	0.009	82	0.008	116
1.6000	3.93	0.024	-153	0.007	-24	0.010	109	0.028	30	0.005	69	0.003	-147
1.7000	3.70	0.017	-32	0.002	101	0.003	122	0.025	102	0.005	113	0.002	125
1.7998	3.49	0.013	-178	0.003	-42	0.001	-148	0.014	176	0.001	-145	0.002	-80
1.9000	3.31	0.011	-31	0.002	155	0.001	-171	0.010	-151	0.001	-173	0.001	175
1.9997	3.14	0.010	-167	0.002	15	0.001	-150	0.015	-128	0.000	0	0.001	-10
2.1000	2.99	0.006	5	0.001	-91	0.001	-45	0.003	-98	0.001	-68	0.000	0
2.2000	2.86	0.007	-121	0.001	63	0.001	-56	0.000	0	0.000	0	0.000	0
2.2998	2.73	0.004	98	0.001	71	0.000	0	0.003	-88	0.001	-93	0.000	0
2.4000	2.62	0.005	-40	0.001	-51	0.001	-68	0.008	71	0.001	-75	0.000	0
2.5000	2.51	0.003	-139	0.000	0	0.000	0	0.002	34	0.000	0	0.000	0

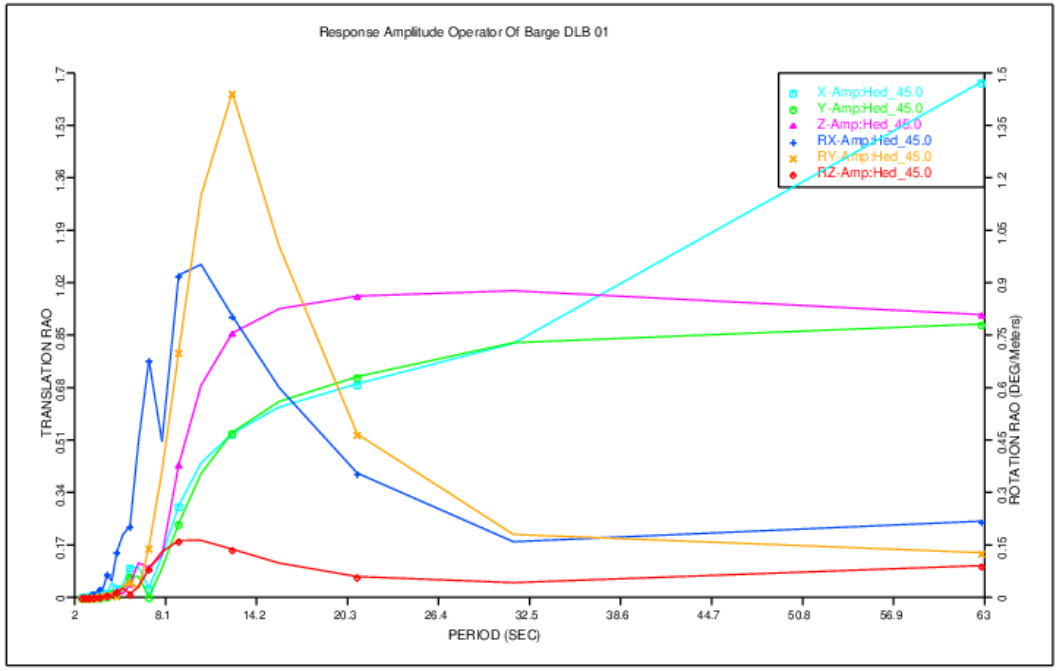

```
*****************************************************************************************************
*                                                *** MOSES ***                                      *
*                                                ---------------                  February 10, 2019  *
*          Response Amplitude Operator Of Barge DLB 01                                              *
*                                                                                                   *
*   Draft            =   4.7 Meters      Trim Angle       =   0.50 Deg.     GMT              =  12.9 Meters *
*   Roll Gy. Radius  =  10.3 Meters      Pitch Gy. Radius =  78.8 Meters    Yaw Gy. Radius   =  78.8 Meters *
*   Heading          =  90.00 Deg.       Forward Speed    =  0.00 Knots     Linearization Based on 1/ 20    *
*                                                                                                   *
*****************************************************************************************************
```

+++ M O T I O N R E S P O N S E O P E R A T O R S +++

Results are in Body System

Of *LCOG On Body DLB01 At X = 63.3 Y = 0.0 Z = 8.0

Process is DEFAULT: Units Are Degrees, Meters, and KN Unless Specified

E N C O U N T E R		Surge / Wave Ampl.		Sway / Wave Ampl.		Heave / Wave Ampl.		Roll / Wave Ampl.		Pitch / Wave Ampl.		Yaw / Wave Ampl.	
Frequency -(Rad/Sec)-	Period -(Sec)-	Ampl.	Phase	Ampl.	Phase	Ampl.	Phase	Ampl.	Phase	Ampl.	Phase	Ampl.	Phase
0.1000	62.81	0.259	22	1.143	116	1.000	0	0.069	90	0.001	-40	0.228	-30
0.2000	31.42	0.045	-94	1.186	92	0.998	0	0.224	89	0.003	75	0.060	-83
0.3000	20.94	0.023	-121	1.030	91	0.997	0	0.515	89	0.007	72	0.023	-86
0.4000	15.71	0.017	-160	0.944	91	0.993	0	0.929	88	0.011	69	0.014	-85
0.5000	12.57	0.019	-164	0.870	91	1.004	0	1.545	87	0.020	63	0.013	-90
0.6000	10.47	0.017	171	0.783	92	1.020	-1	2.495	83	0.036	59	0.015	-103
0.7000	8.98	0.015	154	0.665	93	1.043	-6	3.894	66	0.056	40	0.018	-131
0.8000	7.85	0.012	125	0.485	100	0.969	-18	4.836	31	0.072	19	0.020	-177
0.9000	6.98	0.006	105	0.398	122	0.763	-30	3.525	-8	0.073	-1	0.014	130
1.0000	6.28	0.004	137	0.367	137	0.504	-38	1.855	-24	0.060	-17	0.007	106
1.1000	5.71	0.003	143	0.319	151	0.301	-36	1.004	-20	0.043	-22	0.003	108
1.2000	5.24	0.001	166	0.274	167	0.179	-24	0.563	-8	0.030	-15	0.002	117

1.3001	4.83	0.002	-169	0.230	-173	0.111	-5	0.311	5	0.021	0	0.001	105
1.4000	4.49	0.001	163	0.189	-153	0.072	17	0.154	19	0.016	18	0.000	0
1.4999	4.19	0.001	-135	0.153	-129	0.049	43	0.058	29	0.012	41	0.000	0
1.6000	3.93	0.001	173	0.122	-102	0.030	70	0.047	43	0.011	65	0.000	0
1.7000	3.70	0.000	0	0.101	-70	0.023	98	0.024	-43	0.009	95	0.000	0
1.7998	3.49	0.000	0	0.087	-37	0.017	133	0.040	-28	0.005	126	0.000	0
1.9000	3.31	0.000	0	0.074	-5	0.011	161	0.057	-1	0.005	155	0.001	-163
1.9997	3.14	0.000	0	0.059	44	0.008	-149	0.085	-76	0.003	-160	0.003	39
2.1000	2.99	0.000	0	0.051	69	0.003	-124	0.032	81	0.003	-126	0.001	-157
2.2000	2.86	0.001	-172	0.043	110	0.033	12	0.043	129	0.013	137	0.000	0
2.2998	2.73	0.000	0	0.036	150	0.006	-49	0.049	155	0.004	-69	0.000	0
2.4000	2.62	0.000	0	0.024	-97	0.002	10	0.104	104	0.002	-10	0.003	-85
2.5000	2.51	0.000	0	0.027	-115	0.001	-57	0.025	-103	0.001	22	0.000	0

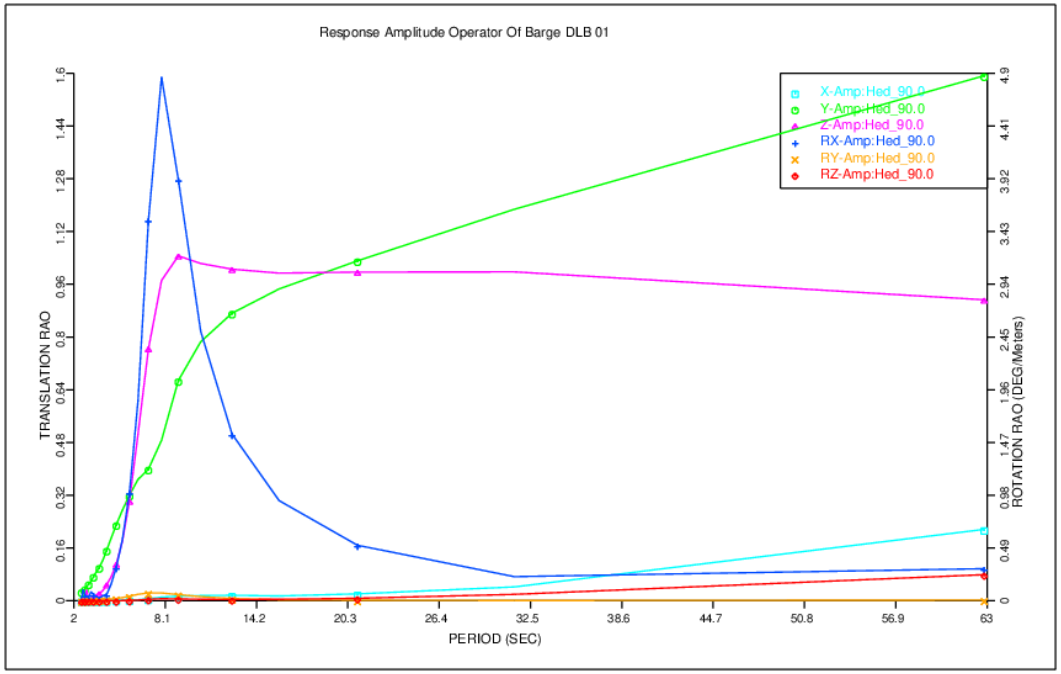

```
*****************************************************************************************************
*                                                *** MOSES ***                                      *
*                                                ---------------                  February 10, 2019  *
*          Response Amplitude Operator Of Barge DLB 01                                              *
*                                                                                                   *
*   Draft            =   4.7 Meters      Trim Angle       =   0.50 Deg.     GMT              =  12.9 Meters *
*   Roll Gy. Radius  =  10.3 Meters      Pitch Gy. Radius =  78.8 Meters    Yaw Gy. Radius   =  78.8 Meters *
*   Heading          = 135.00 Deg.       Forward Speed    =  0.00 Knots     Linearization Based on 1/ 20    *
*                                                                                                   *
*****************************************************************************************************
```

+++ M O T I O N R E S P O N S E O P E R A T O R S +++

Results are in Body System

Of *LCOG On Body DLB01 At X = 63.3 Y = 0.0 Z = 8.0

Process is DEFAULT: Units Are Degrees, Meters, and KN Unless Specified

E N C O U N T E R		Surge / Wave Ampl.		Sway / Wave Ampl.		Heave / Wave Ampl.		Roll / Wave Ampl.		Pitch / Wave Ampl.		Yaw / Wave Ampl.	
Frequency -(Rad/Sec)-	Period -(Sec)-	Ampl.	Phase	Ampl.	Phase	Ampl.	Phase	Ampl.	Phase	Ampl.	Phase	Ampl.	Phase
0.1000	62.81	1.113	-42	0.729	108	1.005	-2	0.052	91	0.037	88	0.211	-31
0.2000	31.42	0.873	-99	0.841	82	0.994	-10	0.156	80	0.185	79	0.062	-68
0.3000	20.94	0.708	-114	0.712	67	0.975	-23	0.352	68	0.484	63	0.063	-44
0.4000	15.71	0.610	-133	0.626	49	0.919	-41	0.609	51	1.053	31	0.099	-53
0.5000	12.57	0.477	-156	0.523	25	0.777	-66	0.872	31	1.535	-23	0.135	-75
0.6000	10.47	0.362	178	0.397	-3	0.559	-94	1.139	7	1.238	-77	0.156	-104
0.7000	8.98	0.236	143	0.254	-39	0.310	-124	1.275	-25	0.762	-118	0.149	-137
0.8000	7.85	0.096	98	0.111	-85	0.077	-124	0.945	-63	0.387	-152	0.116	-175
0.9000	6.98	0.030	-94	0.026	169	0.130	-72	0.695	-71	0.142	-174	0.070	139
1.0000	6.28	0.096	-164	0.051	44	0.135	-105	0.511	-90	0.036	-136	0.024	75
1.1000	5.71	0.091	135	0.047	-23	0.077	-133	0.321	-99	0.058	-99	0.014	-86
1.2000	5.24	0.033	57	0.020	-113	0.026	-123	0.196	-99	0.054	-120	0.019	-168

1.3001	4.83	0.032	-149	0.015	95	0.030	-94	0.130	-80	0.021	-133	0.009	106
1.4000	4.49	0.044	119	0.011	-6	0.019	-95	0.106	-92	0.017	-95	0.005	-46
1.4999	4.19	0.014	0	0.006	-152	0.010	-57	0.069	-83	0.015	-87	0.004	-141
1.6000	3.93	0.023	161	0.007	161	0.013	-82	0.005	146	0.005	-87	0.002	36
1.7000	3.70	0.016	41	0.002	-111	0.007	-62	0.041	-56	0.009	-65	0.003	-35
1.7998	3.49	0.013	-170	0.003	167	0.006	-22	0.031	-30	0.006	-24	0.001	155
1.9000	3.31	0.011	39	0.001	4	0.004	-26	0.023	-16	0.005	-24	0.002	0
1.9997	3.14	0.009	178	0.003	-160	0.003	-9	0.018	-8	0.004	-10	0.000	0
2.1000	2.99	0.006	6	0.000	0	0.002	14	0.018	6	0.003	23	0.001	14
2.2000	2.86	0.007	134	0.002	-151	0.003	27	0.015	37	0.003	27	0.001	48
2.2998	2.73	0.004	-83	0.001	-170	0.002	50	0.010	13	0.003	52	0.001	4
2.4000	2.62	0.005	54	0.002	-121	0.002	77	0.015	59	0.002	80	0.001	71
2.5000	2.51	0.003	155	0.001	-98	0.002	84	0.009	100	0.003	83	0.000	0

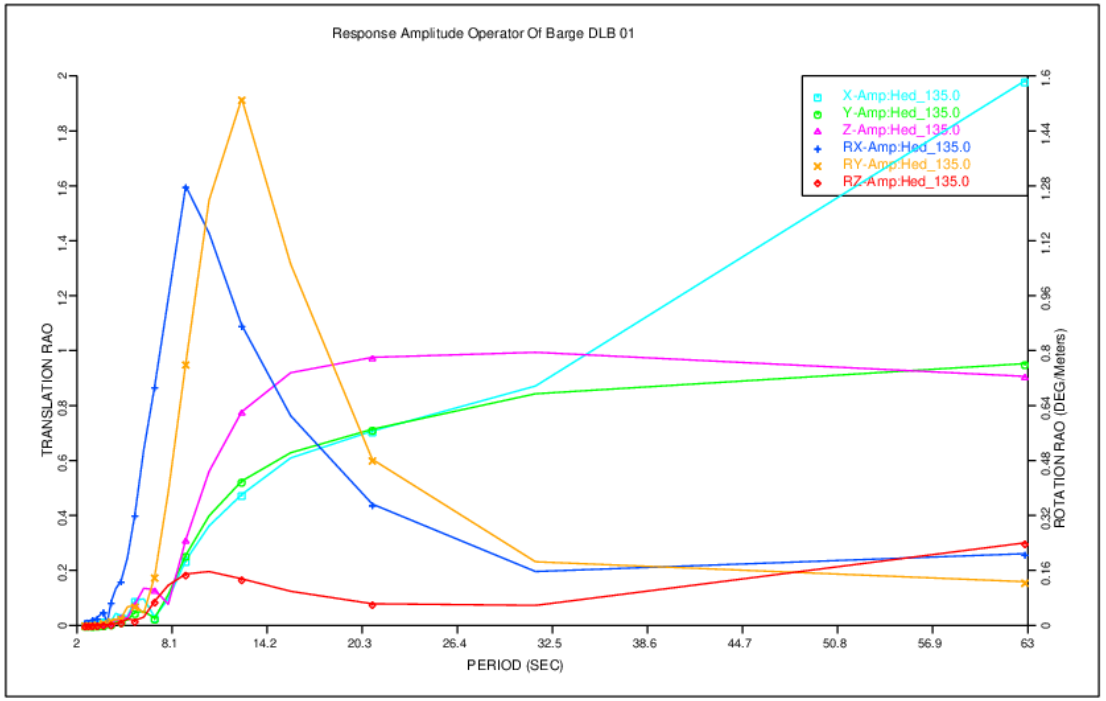

```
*****************************************************************************************************
*                                                *** MOSES ***                                      *
*                                                ---------------                  February 10, 2019  *
*          Response Amplitude Operator Of Barge DLB 01                                              *
*                                                                                                   *
*   Draft            =   4.7 Meters      Trim Angle       =   0.50 Deg.     GMT              =  12.9 Meters *
*   Roll Gy. Radius  =  10.3 Meters      Pitch Gy. Radius =  78.8 Meters    Yaw Gy. Radius   =  78.8 Meters *
*   Heading          = 180.00 Deg.       Forward Speed    =  0.00 Knots     Linearization Based on 1/ 20    *
*                                                                                                   *
*****************************************************************************************************
```

+++ M O T I O N R E S P O N S E O P E R A T O R S +++

Results are in Body System

Of *LCOG On Body DLB01 At X = 63.3 Y = 0.0 Z = 8.0

Process is DEFAULT: Units Are Degrees, Meters, and KN Unless Specified

E N C O U N T E R		Surge / Wave Ampl.		Sway / Wave Ampl.		Heave / Wave Ampl.		Roll / Wave Ampl.		Pitch / Wave Ampl.		Yaw / Wave Ampl.	
Frequency -(Rad/Sec)-	Period -(Sec)-	Ampl.	Phase	Ampl.	Phase	Ampl.	Phase	Ampl.	Phase	Ampl.	Phase	Ampl.	Phase
0.1000	62.81	1.417	-50	0.054	-128	1.006	-3	0.003	167	0.053	87	0.050	0
0.2000	31.42	1.178	-103	0.011	122	0.990	-14	0.003	-111	0.259	75	0.010	-99
0.3000	20.94	0.952	-123	0.005	-129	0.955	-32	0.007	-121	0.671	53	0.003	-136
0.4000	15.71	0.772	-151	0.007	-134	0.849	-59	0.012	-141	1.398	13	0.002	163
0.5000	12.57	0.517	176	0.007	-155	0.600	-96	0.016	-168	1.858	-49	0.002	115
0.6000	10.47	0.296	140	0.005	177	0.259	-133	0.017	165	1.305	-115	0.002	80
0.7000	8.98	0.073	82	0.004	143	0.055	-55	0.015	140	0.563	-171	0.002	44
0.8000	7.85	0.109	-137	0.002	99	0.200	-75	0.012	130	0.108	158	0.002	7
0.9000	6.98	0.151	153	0.001	-1	0.157	-121	0.012	103	0.088	-119	0.001	-36
1.0000	6.28	0.057	69	0.001	-127	0.075	-132	0.007	85	0.093	-142	0.000	0
1.1000	5.71	0.058	-162	0.001	158	0.066	-122	0.005	89	0.048	-160	0.000	0
1.2000	5.24	0.060	94	0.000	0	0.052	-156	0.003	74	0.040	-124	0.000	0

1.3001	4.83	0.023	-127	0.000	0	0.022	-131	0.002	144	0.036	-162	0.000	0
1.4000	4.49	0.037	86	0.002	-104	0.011	-141	0.082	156	0.026	-143	0.001	-109
1.4999	4.19	0.020	-149	0.000	0	0.017	-100	0.015	20	0.016	-144	0.000	0
1.6000	3.93	0.017	32	0.000	0	0.018	124	0.003	109	0.011	158	0.000	0
1.7000	3.70	0.019	137	0.000	0	0.014	-158	0.001	167	0.011	-168	0.000	0
1.7998	3.49	0.010	-112	0.000	0	0.005	-150	0.002	63	0.010	-166	0.000	0
1.9000	3.31	0.010	19	0.000	0	0.006	-145	0.001	149	0.010	-132	0.000	0
1.9997	3.14	0.010	93	0.000	0	0.006	-137	0.001	-162	0.007	-120	0.000	0
2.1000	2.99	0.007	153	0.000	0	0.003	-146	0.000	0	0.003	-140	0.000	0
2.2000	2.86	0.005	-142	0.000	0	0.002	-99	0.000	0	0.003	-106	0.000	0
2.2998	2.73	0.004	-88	0.000	0	0.005	-107	0.000	0	0.006	-110	0.000	0
2.4000	2.62	0.003	-54	0.000	0	0.004	-135	0.001	-72	0.005	-136	0.000	0
2.5000	2.51	0.003	-36	0.000	0	0.003	-78	0.000	0	0.005	-70	0.000	0

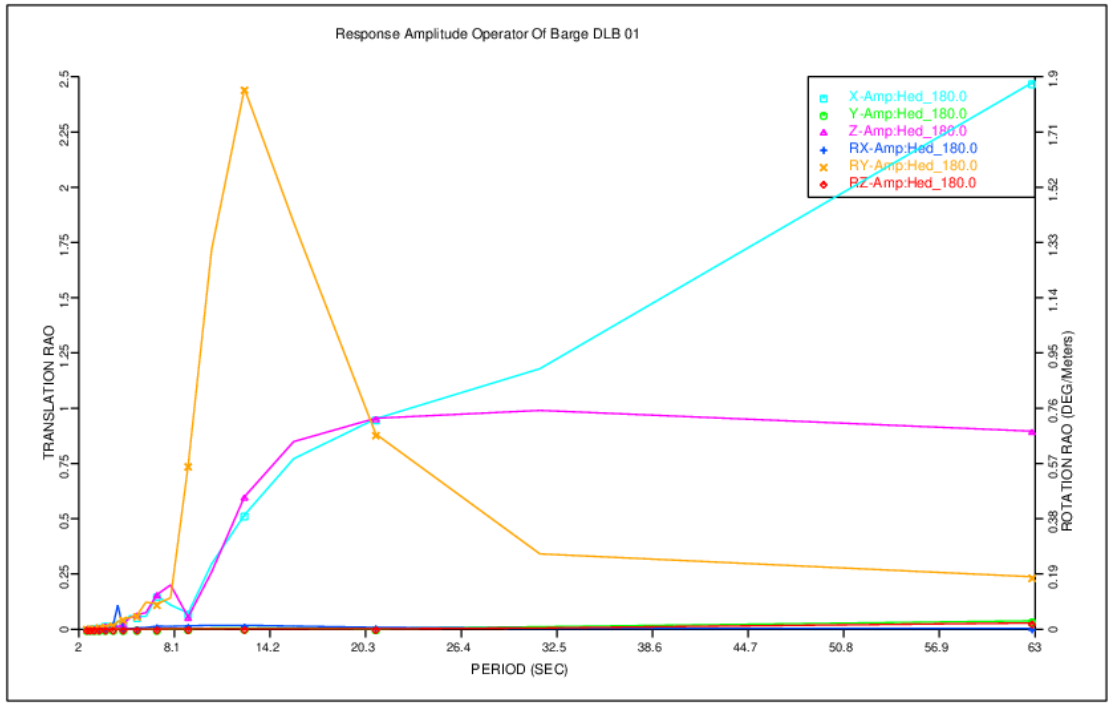

```
*****************************************************************************************************
*                                          ***  MOSES   ***                                         *
*                                          ----------------                      February 10, 2019   *
*          Response Amplitude Operator Of Barge DLB 01                                              *
*                                                                                                   *
*   Draft            =   4.7 Meters       Trim Angle       =   0.50 Deg.     GMT              =  12.9 Meters *
*   Roll Gy. Radius  =  10.3 Meters       Pitch Gy. Radius =  78.8 Meters    Yaw Gy. Radius   =  78.8 Meters *
*   JONSWAP  Height  =  0.70 Meters       Peak Period      =   4.0  Sec.     M. Heading       =   0.0  Deg.  *
*   S. Coef.         = 200.                                                  Gamma            =   1.4        *
*                                                                                                   *
*****************************************************************************************************
```

+++ M O T I O N S T A T I S T I C S +++

Results are in Body System

Of *LCOG On Body DLB01 At X = 63.3 Y = 0.0 Z = 8.0

Maximum Responses Based on a Multiplier of 3.720

Process is DEFAULT: Units Are Degrees, Meters, and KN Unless Specified

Single Amplitude Motions

	Surge	Sway	Heave	Roll	Pitch	Yaw	Mag
Root Mean Square	0.004	0.000	0.002	0.003	0.002	0.000	0.010
Ave of 1/3 Highest	0.009	0.000	0.005	0.006	0.004	0.000	0.010
Ave of 1/10 Highest	0.011	0.000	0.006	0.007	0.006	0.000	0.010
Maximum	0.016	0.000	0.009	0.011	0.008	0.000	0.020

```
*****************************************************************************************************
*                                          ***  MOSES   ***                                         *
*                                          ----------------                      February 10, 2019   *
*          Response Amplitude Operator Of Barge DLB 01                                              *
*                                                                                                   *
*   Draft            =   4.7 Meters       Trim Angle       =   0.50 Deg.     GMT              =  12.9 Meters *
*   Roll Gy. Radius  =  10.3 Meters       Pitch Gy. Radius =  78.8 Meters    Yaw Gy. Radius   =  78.8 Meters *
*   JONSWAP  Height  =  0.70 Meters       Peak Period      =   4.0  Sec.     M. Heading       =  45.0  Deg.  *
*   S. Coef.         = 200.                                                  Gamma            =   1.4        *
*                                                                                                   *
*****************************************************************************************************
```

+++ M O T I O N S T A T I S T I C S +++

Results are in Body System

Of *LCOG On Body DLB01 At X = 63.3 Y = 0.0 Z = 8.0

Maximum Responses Based on a Multiplier of 3.720

Process is DEFAULT: Units Are Degrees, Meters, and KN Unless Specified

Single Amplitude Motions

	Surge	Sway	Heave	Roll	Pitch	Yaw	Mag
Root Mean Square	0.005	0.002	0.002	0.012	0.002	0.001	0.005
Ave of 1/3 Highest	0.009	0.005	0.004	0.024	0.004	0.003	0.011
Ave of 1/10 Highest	0.012	0.006	0.005	0.030	0.004	0.003	0.014
Maximum	0.017	0.009	0.008	0.044	0.007	0.005	0.020

```
*****************************************************************************************************
*                                          ***  MOSES   ***                                         *
*                                          ----------------                      February 10, 2019   *
*          Response Amplitude Operator Of Barge DLB 01                                              *
*                                                                                                   *
*   Draft            =   4.7 Meters       Trim Angle       =   0.50 Deg.     GMT              =  12.9 Meters *
*   Roll Gy. Radius  =  10.3 Meters       Pitch Gy. Radius =  78.8 Meters    Yaw Gy. Radius   =  78.8 Meters *
*   JONSWAP  Height  =  0.80 Meters       Peak Period      =   4.2  Sec.     M. Heading       =  90.0  Deg.  *
*   S. Coef.         = 200.                                                  Gamma            =   1.4        *
*                                                                                                   *
*****************************************************************************************************
```

+++ M O T I O N S T A T I S T I C S +++

Results are in Body System

Of *LCOG On Body DLB01 At X = 63.3 Y = 0.0 Z = 8.0

Maximum Responses Based on a Multiplier of 3.720

Process is DEFAULT: Units Are Degrees, Meters, and KN Unless Specified

Single Amplitude Motions

	Surge	Sway	Heave	Roll	Pitch	Yaw	Mag
Root Mean Square	0.000	0.024	0.013	0.039	0.002	0.000	0.027
Ave of 1/3 Highest	0.000	0.048	0.025	0.078	0.005	0.000	0.054
Ave of 1/10 Highest	0.000	0.061	0.032	0.099	0.006	0.000	0.069
Maximum	0.001	0.089	0.047	0.144	0.008	0.001	0.101

```
*****************************************************************************************************
*                                          ***  MOSES   ***                                         *
*                                          ----------------                      February 10, 2019   *
*          Response Amplitude Operator Of Barge DLB 01                                              *
*                                                                                                   *
*   Draft            =   4.7 Meters       Trim Angle       =   0.50 Deg.     GMT              =  12.9 Meters *
*   Roll Gy. Radius  =  10.3 Meters       Pitch Gy. Radius =  78.8 Meters    Yaw Gy. Radius   =  78.8 Meters *
*   JONSWAP  Height  =  0.70 Meters       Peak Period      =   4.0  Sec.     M. Heading       = 135.0  Deg.  *
*   S. Coef.         = 200.                                                  Gamma            =   1.4        *
*                                                                                                   *
*****************************************************************************************************
```

+++ M O T I O N S T A T I S T I C S +++

Results are in Body System

Of *LCOG On Body DLB01 At X = 63.3 Y = 0.0 Z = 8.0

Maximum Responses Based on a Multiplier of 3.720

Process is DEFAULT: Units Are Degrees, Meters, and KN Unless Specified

Single Amplitude Motions

	Surge	Sway	Heave	Roll	Pitch	Yaw	Mag
Root Mean Square	0.004	0.002	0.003	0.015	0.003	0.001	0.005
Ave of 1/3 Highest	0.009	0.003	0.006	0.029	0.006	0.002	0.011
Ave of 1/10 Highest	0.011	0.004	0.008	0.037	0.007	0.002	0.014
Maximum	0.016	0.006	0.011	0.054	0.011	0.004	0.020

```
*****************************************************************************************************
*                                          ***  MOSES   ***                                         *
*                                          ----------------                      February 10, 2019   *
*          Response Amplitude Operator Of Barge DLB 01                                              *
*                                                                                                   *
*   Draft            =   4.7 Meters       Trim Angle       =   0.50 Deg.     GMT              =  12.9 Meters *
*   Roll Gy. Radius  =  10.3 Meters       Pitch Gy. Radius =  78.8 Meters    Yaw Gy. Radius   =  78.8 Meters *
*   JONSWAP  Height  =  0.70 Meters       Peak Period      =   4.0  Sec.     M. Heading       = 180.0  Deg.  *
*   S. Coef.         = 200.                                                  Gamma            =   1.4        *
*                                                                                                   *
*****************************************************************************************************
```

+++ M O T I O N S T A T I S T I C S +++

Results are in Body System

Of *LCOG On Body DLB01 At X = 63.3 Y = 0.0 Z = 8.0

Maximum Responses Based on a Multiplier of 3.720

Process is DEFAULT: Units Are Degrees, Meters, and KN Unless Specified

Single Amplitude Motions

	Surge	Sway	Heave	Roll	Pitch	Yaw	Mag
Root Mean Square	0.004	0.000	0.003	0.010	0.000	0.000	0.010
Ave of 1/3 Highest	0.008	0.000	0.006	0.010	0.010	0.000	0.010
Ave of 1/10 Highest	0.010	0.000	0.008	0.010	0.010	0.000	0.010
Maximum	0.015	0.000	0.012	0.020	0.010	0.000	0.020

LAMPIRAN C

HASIL OUTPUT SOFTWARE OFFPIPE

(ANALISIS STATIS)

INITIATION

S T A T I C P I P E C O O R D I N A T E S, F O R C E S A N D S T R A I N S

NODE NO.	PIPE SECTION	X COORD (M)	Y COORD (M)	VERT ANGLE (DEG)	PIPE LENGTH (M)	SUPPORT REACTION (KN)	SEPARA -TION (M)	AXIAL TENSION (KN)	BENDING MOMENT (KN-M)	TENSILE STRAIN (PCT)	BENDING STRAIN (PCT)	TOTAL STRAIN (PCT)	PERCNT ALLOW (PCT)
1	LAYBARGE	96.31	6.41	1.93	0.00	9.917	0.000	0.00	2.74	0.0000	0.0020	0.0020	0.00
3	LAYBARGE	84.28	6.05	1.58	12.04	24.249	0.000	-0.73	-19.36	0.0000	-0.0145	0.0145	0.00
5	LAYBARGE	73.45	5.73	1.89	22.87	24.050	0.000	-1.39	-28.77	-0.0001	-0.0215	0.0216	0.00
7	TENSIONR	60.10	5.24	2.33	36.23	32.926	0.000	20.91	-25.26	0.0010	-0.0189	0.0199	0.00
9	LAYBARGE	51.10	4.86	2.19	45.24	0.000	0.000	20.17	34.88	0.0009	0.0261	0.0270	0.00
10	LAYBARGE	46.45	4.70	1.85	49.89	7.251	0.000	19.87	17.46	0.0009	0.0131	0.0140	0.00
12	LAYBARGE	35.36	4.31	2.82	60.99	43.037	0.000	18.75	-93.67	0.0009	-0.0701	0.0709	0.00
14	LAYBARGE	25.34	3.64	4.51	71.03	14.482	0.000	17.71	-36.15	0.0008	-0.0270	0.0279	0.00
16	LAYBARGE	19.30	3.15	4.72	77.09	0.000	0.000	16.76	0.00	0.0008	0.0000	0.0008	0.00
17	LAYBARGE	8.86	2.03	5.80	87.60	0.000	0.271	16.74	0.00	0.0000	0.0000	0.0000	0.00
19	LAYBARGE	4.84	1.64	5.35	91.63	0.000	0.000	16.73	0.00	0.0000	0.0000	0.0000	0.00
20	LAYBARGE	3.03	1.48	4.95	93.44	0.000	0.860	16.72	0.00	0.0000	0.0000	0.0000	0.00
24	STINGER	-7.50	0.62	4.24	104.01	0.000	0.881	16.70	0.00	0.0000	0.0000	0.0000	0.00
26	STINGER	-16.58	0.01	5.10	113.12	0.889	0.000	16.68	0.00	0.0000	0.0000	0.0000	0.00
29	STINGER	-26.51	-1.10	10.29	123.10	2.288	0.000	16.64	0.00	0.0000	0.0000	0.0000	0.00
31	STINGER	-37.10	-3.78	14.22	134.04	0.042	0.000	16.67	0.00	0.0000	0.0000	0.0000	0.00
33	STINGER	-40.04	-4.52	14.24	137.07	0.000	0.447	16.67	0.00	0.0000	0.0000	0.0000	0.00
35	SAGBEND	-46.04	-6.04	14.19	143.25	0.000	0.000	16.67	0.00	0.0000	0.0000	0.0000	0.00
36	SAGBEND	-51.90	-7.52	14.14	149.30	0.000	0.000	16.66	0.00	0.0000	0.0000	0.0000	0.00
37	SAGBEND	-57.77	-9.00	14.09	155.35	0.000	0.000	16.66	0.00	0.0000	0.0000	0.0000	0.00
38	SAGBEND	-63.64	-10.47	14.03	161.40	0.000	0.000	16.65	0.00	0.0000	0.0000	0.0000	0.00
39	SAGBEND	-69.51	-11.93	13.98	167.45	0.000	0.000	16.65	0.00	0.0000	0.0000	0.0000	0.00
40	SAGBEND	-75.38	-13.39	13.93	173.50	0.000	0.000	16.65	0.00	0.0000	0.0000	0.0000	0.00
41	SAGBEND	-81.25	-14.84	13.87	179.55	0.000	0.000	16.64	0.00	0.0000	0.0000	0.0000	0.00
42	SAGBEND	-87.13	-16.29	13.82	185.60	0.000	0.000	16.64	0.00	0.0000	0.0000	0.0000	0.00
43	SAGBEND	-93.00	-17.73	13.77	191.65	0.000	0.000	16.63	0.00	0.0000	0.0000	0.0000	0.00
44	SAGBEND	-98.88	-19.17	13.72	197.70	0.000	0.000	16.63	0.00	0.0000	0.0000	0.0000	0.00
45	SAGBEND	-104.76	-20.60	13.66	203.75	0.000	0.000	16.63	0.00	0.0000	0.0000	0.0000	0.00
46	SAGBEND	-110.64	-22.03	13.61	209.80	0.000	0.000	16.62	0.00	0.0000	0.0000	0.0000	0.00
47	SAGBEND	-116.52	-23.45	13.56	215.85	0.000	0.000	16.62	0.00	0.0000	0.0000	0.0000	0.00
48	SAGBEND	-122.40	-24.87	13.50	221.90	0.000	0.000	16.62	0.00	0.0000	0.0000	0.0000	0.00
49	SAGBEND	-128.28	-26.28	13.45	227.95	0.000	0.000	16.61	0.00	0.0000	0.0000	0.0000	0.00
50	SAGBEND	-134.17	-27.68	13.40	234.00	0.000	0.000	16.61	0.00	0.0000	0.0000	0.0000	0.00
51	SAGBEND	-140.05	-29.08	13.34	240.05	0.000	0.000	16.61	0.00	0.0000	0.0000	0.0000	0.00
52	SAGBEND	-145.94	-30.47	13.29	246.10	0.000	0.000	16.60	0.00	0.0000	0.0000	0.0000	0.00
53	SAGBEND	-151.83	-31.86	13.24	252.15	0.000	0.000	16.60	0.00	0.0000	0.0000	0.0000	0.00
54	SAGBEND	-157.72	-33.24	13.19	258.20	0.000	0.000	16.59	0.00	0.0000	0.0000	0.0000	0.00
55	SAGBEND	-163.61	-34.62	13.13	264.25	0.000	0.000	16.59	0.00	0.0000	0.0000	0.0000	0.00
56	SAGBEND	-169.50	-35.99	13.08	270.30	0.000	0.000	16.59	0.00	0.0000	0.0000	0.0000	0.00
57	SAGBEND	-175.40	-37.36	13.03	276.35	0.000	0.000	16.58	0.00	0.0000	0.0000	0.0000	0.00
58	SAGBEND	-178.96	-38.18	12.99	280.01	0.000	0.000	16.58	0.00	0.0000	0.0000	0.0000	0.00
59	SAGBEND	-183.09	-39.08	11.64	284.23	0.000	0.000	16.50	0.00	0.0000	0.0000	0.0000	0.00
60	SAGBEND	-187.23	-39.89	10.28	288.45	0.000	0.000	16.42	0.00	0.0000	0.0000	0.0000	0.00

S T A T I C P I P E C O O R D I N A T E S, F O R C E S A N D S T R A I N S

NODE NO.	PIPE SECTION	X COORD (M)	Y COORD (M)	VERT ANGLE (DEG)	PIPE LENGTH (M)	SUPPORT REACTION (KN)	SEPARA -TION (M)	AXIAL TENSION (KN)	BENDING MOMENT (KN-M)	TENSILE STRAIN (PCT)	BENDING STRAIN (PCT)	TOTAL STRAIN (PCT)	PERCNT ALLOW (PCT)
61	SAGBEND	-193.20	-40.86	8.30	294.50	0.000	0.000	16.33	0.00	0.0000	0.0000	0.0000	0.00
62	SAGBEND	-199.20	-41.63	6.31	300.55	0.000	0.000	16.26	0.00	0.0000	0.0000	0.0000	0.00
63	SAGBEND	-205.22	-42.19	4.29	306.60	0.000	0.000	16.20	0.00	0.0000	0.0000	0.0000	0.00
64	SAGBEND	-211.26	-42.54	2.26	312.65	0.000	0.000	16.17	0.00	0.0000	0.0000	0.0000	0.00
65	SAGBEND	-217.31	-42.67	0.18	318.70	0.223	0.000	16.16	0.01	0.0000	0.0000	0.0000	0.00
66	SEABED	-223.36	-42.67	0.02	324.75	0.567	0.000	16.16	0.01	0.0000	0.0000	0.0000	0.00
67	SEABED	-229.41	-42.67	0.00	330.80	0.572	0.000	16.16	0.00	0.0000	0.0000	0.0000	0.00
68	SEABED	-235.46	-42.67	0.00	336.85	0.572	0.000	16.16	0.00	0.0000	0.0000	0.0000	0.00
69	SEABED	-241.51	-42.67	0.00	342.90	0.572	0.000	16.16	0.00	0.0000	0.0000	0.0000	0.00
70	SEABED	-247.56	-42.67	0.00	348.95	0.572	0.000	16.16	0.00	0.0000	0.0000	0.0000	0.00
71	SEABED	-253.61	-42.67	0.00	355.00	0.572	0.000	16.16	0.00	0.0000	0.0000	0.0000	0.00
72	SEABED	-259.66	-42.67	0.00	361.05	0.572	0.000	16.16	0.00	0.0000	0.0000	0.0000	0.00
73	SEABED	-265.71	-42.67	0.00	367.10	0.572	0.000	16.16	0.00	0.0000	0.0000	0.0000	0.00
74	SEABED	-271.76	-42.67	0.00	373.15	0.572	0.000	16.16	0.00	0.0000	0.0000	0.0000	0.00
75	SEABED	-277.81	-42.67	0.00	379.20	0.572	0.000	16.16	0.00	0.0000	0.0000	0.0000	0.00
76	SEABED	-283.86	-42.67	0.00	385.25	0.572	0.000	16.16	0.00	0.0000	0.0000	0.0000	0.00
77	SEABED	-289.91	-42.67	0.00	391.30	0.572	0.000	16.16	0.00	0.0000	0.0000	0.0000	0.00
78	SEABED	-295.96	-42.67	0.00	397.36	0.572	0.000	16.16	0.00	0.0000	0.0000	0.0000	0.00
79	SEABED	-302.01	-42.67	0.00	403.41	0.572	0.000	16.16	0.00	0.0000	0.0000	0.0000	0.00
80	SEABED	-308.06	-42.67	0.00	409.46	0.572	0.000	16.16	0.00	0.0000	0.0000	0.0000	0.00
81	SEABED	-314.11	-42.67	0.00	415.51	0.572	0.000	16.16	0.00	0.0000	0.0000	0.0000	0.00
82	SEABED	-320.16	-42.67	0.00	421.56	0.572	0.000	16.16	0.00	0.0000	0.0000	0.0000	0.00
83	SEABED	-326.21	-42.67	0.00	427.61	0.572	0.000	16.16	0.00	0.0000	0.0000	0.0000	0.00
84	SEABED	-332.26	-42.67	0.00	433.66	0.572	0.000	16.16	0.00	0.0000	0.0000	0.0000	0.00
85	SEABED	-338.31	-42.67	0.00	439.71	0.572	0.000	16.16	0.00	0.0000	0.0000	0.0000	0.00
86	SEABED	-344.36	-42.67	0.00	445.76	0.572	0.000	16.16	0.00	0.0000	0.0000	0.0000	0.00
87	SEABED	-350.41	-42.67	0.00	451.81	0.572	0.000	16.16	0.00	0.0000	0.0000	0.0000	0.00
88	SEABED	-356.46	-42.67	0.00	457.86	0.572	0.000	16.16	0.00	0.0000	0.0000	0.0000	0.00
89	SEABED	-362.51	-42.67	0.00	463.91	0.572	0.000	16.16	0.00	0.0000	0.0000	0.0000	0.00
90	SEABED	-368.56	-42.67	0.00	469.96	0.572	0.000	16.16	0.00	0.0000	0.0000	0.0000	0.00
91	SEABED	-374.61	-42.67	0.00	476.01	0.572	0.000	16.16	0.00	0.0000	0.0000	0.0000	0.00
92	SEABED	-380.66	-42.67	0.00	482.06	0.572	0.000	16.16	0.00	0.0000	0.0000	0.0000	0.00
93	SEABED	-386.71	-42.67	0.00	488.11	0.572	0.000	16.16	0.00	0.0000	0.0000	0.0000	0.00
94	SEABED	-392.76	-42.67	0.00	494.16	0.572	0.000	16.16	0.00	0.0000	0.0000	0.0000	0.00
95	SEABED	-398.81	-42.67	0.00	500.21	0.572	0.000	16.16	0.00	0.0000	0.0000	0.0000	0.00
96	SEABED	-404.86	-42.67	0.00	506.26	0.572	0.000	16.16	0.00	0.0000	0.0000	0.0000	0.00
97	SEABED	-410.91	-42.67	0.00	512.31	0.572	0.000	16.16	0.00	0.0000	0.0000	0.0000	0.00
98	SEABED	-416.96	-42.67	0.00	518.36	0.572	0.000	16.16	0.00	0.0000	0.0000	0.0000	0.00
99	SEABED	-423.01	-42.67	0.00	524.41	0.572	0.000	16.16	0.00	0.0000	0.0000	0.0000	0.00
100	SEABED	-429.07	-42.67	0.00	530.46	0.572	0.000	16.16	0.00	0.0000	0.0000	0.0000	0.00
101	SEABED	-435.12	-42.67	0.00	536.51	0.572	0.000	16.16	0.00	0.0000	0.0000	0.0000	0.00
102	SEABED	-441.17	-42.67	0.00	542.56	0.572	0.000	16.16	0.00	0.0000	0.0000	0.0000	0.00
103	SEABED	-447.22	-42.67	0.00	548.61	0.572	0.000	16.16	0.00	0.0000	0.0000	0.0000	0.00
104	SEABED	-453.27	-42.67	0.00	554.66	0.572	0.000	16.16	0.00	0.0000	0.0000	0.0000	0.00

S T A T I C P I P E C O O R D I N A T E S, F O R C E S A N D S T R A I N S

NODE NO.	PIPE SECTION	X COORD (M)	Y COORD (M)	VERT ANGLE (DEG)	PIPE LENGTH (M)	SUPPORT REACTION (KN)	SEPARA -TION (M)	AXIAL TENSION (KN)	BENDING MOMENT (KN-M)	TENSILE STRAIN (PCT)	BENDING STRAIN (PCT)	TOTAL STRAIN (PCT)	PERCNT ALLOW (PCT)
105	SEABED	-459.32	-42.67	0.00	560.71	0.572	0.000	16.16	0.00	0.0000	0.0000	0.0000	0.00
106	SEABED	-465.37	-42.67	0.00	566.76	0.572	0.000	16.16	0.00	0.0000	0.0000	0.0000	0.00
107	SEABED	-471.42	-42.67	0.00	572.81	0.572	0.000	16.16	0.00	0.0000	0.0000	0.0000	0.00
108	SEABED	-477.47	-42.67	0.00	578.86	0.572	0.000	16.16	0.00	0.0000	0.0000	0.0000	0.00
109	SEABED	-483.52	-42.67	0.00	584.91	0.572	0.000	16.16	0.00	0.0000	0.0000	0.0000	0.00
110	SEABED	-489.57	-42.67	0.00	590.96	0.572	0.000	16.16	0.00	0.0000	0.0000	0.0000	0.00
111	SEABED	-495.62	-42.67	0.00	597.01	0.572	0.000	16.16	0.00	0.0000	0.0000	0.0000	0.00
112	SEABED	-501.67	-42.67	0.00	603.06	0.572	0.000	16.16	0.00	0.0000	0.0000	0.0000	0.00
113	SEABED	-507.72	-42.67	0.00	609.11	0.572	0.000	16.16	0.00	0.0000	0.0000	0.0000	0.00
114	SEABED	-513.77	-42.67	0.00	615.16	0.572	0.000	16.16	0.00	0.0000	0.0000	0.0000	0.00
115	SEABED	-519.82	-42.67	0.00	621.21	0.572	0.000	16.16	0.00	0.0000	0.0000	0.0000	0.00
116	SEABED	-525.87	-42.67	0.00	627.26	0.572	0.000	16.16	0.00	0.0000	0.0000	0.0000	0.00
117	SEABED	-531.92	-42.67	0.00	633.31	0.572	0.000	16.16	0.00	0.0000	0.0000	0.0000	0.00
118	SEABED	-537.97	-42.67	0.00	639.36	0.572	0.000	16.16	0.00	0.0000	0.0000	0.0000	0.00
119	SEABED	-544.02	-42.67	0.00	645.41	0.572	0.000	16.16	0.00	0.0000	0.0000	0.0000	0.00
120	SEABED	-550.07	-42.67	0.00	651.46	0.572	0.000	16.16	0.00	0.0000	0.0000	0.0000	0.00
121	SEABED	-556.12	-42.67	0.00	657.51	0.572	0.000	16.16	0.00	0.0000	0.0000	0.0000	0.00
122	SEABED	-562.17	-42.67	0.00	663.56	0.572	0.000	16.16	0.00	0.0000	0.0000	0.0000	0.00
123	SEABED	-568.22	-42.67	0.00	669.61	0.572	0.000	16.16	0.00	0.0000	0.0000	0.0000	0.00
124	SEABED	-574.27	-42.67	-0.01	675.66	0.483	0.000	16.16	0.00	0.0000	0.0000	0.0000	0.00
125	SEABED	-578.63	-42.67	-0.19	680.02	0.000	0.000	16.16	0.00	0.0000	0.0000	0.0000	0.00

S T A T I C P I P E C O O R D I N A T E S, F O R C E S A N D S T R A I N S

NODE NO.	PIPE SECTION	X COORD (M)	Y COORD (M)	VERT ANGLE (DEG)	PIPE LENGTH (M)	SUPPORT REACTION (KN)	SEPARA -TION (M)	AXIAL TENSION (KN)	BENDING MOMENT (KN-M)	TENSILE STRAIN (PCT)	BENDING STRAIN (PCT)	TOTAL STRAIN (PCT)	PERCNT ALLOW (PCT)
1	LAYBARGE	96.31	6.41	1.93	0.00	9.927	0.000	0.00	2.74	0.0000	0.0021	0.0021	0.00
3	LAYBARGE	84.28	6.05	1.58	12.04	24.181	0.000	-0.73	-19.25	0.0000	-0.0144	0.0144	0.00

5	LAYBARGE	73.45	5.73	1.90	22.87	24.278	0.000	-1.39	-29.21	-0.0001	-0.0218	0.0219	0.00
7	TENSIONR	60.10	5.24	2.31	36.23	32.158	0.000	20.92	-24.08	0.0010	-0.0180	0.0190	0.00
9	LAYBARGE	51.10	4.87	2.19	45.24	0.000	0.000	20.19	31.22	0.0009	0.0234	0.0243	0.00
10	LAYBARGE	46.45	4.70	1.91	49.89	10.894	0.000	19.87	11.94	0.0009	0.0089	0.0099	0.00
12	LAYBARGE	35.36	4.31	2.59	60.99	26.560	0.000	18.88	-78.77	0.0009	-0.0589	0.0598	0.00
14	LAYBARGE	25.34	3.64	5.31	71.03	40.389	0.000	17.26	-136.76	0.0008	-0.1023	0.1031	0.00
16	LAYBARGE	19.32	2.99	6.63	77.09	0.000	0.000	16.42	-34.77	0.0008	-0.0260	0.0268	0.00
17	LAYBARGE	8.88	1.76	6.80	87.60	16.074	0.000	13.96	-9.75	0.0006	-0.0073	0.0079	0.00
19	LAYBARGE	4.87	1.28	6.84	91.63	0.000	0.000	13.00	0.00	0.0006	0.0000	0.0006	0.00
20	LAYBARGE	3.06	1.14	4.14	93.45	0.000	0.516	13.01	0.00	0.0000	0.0000	0.0000	0.00
24	STINGER	-7.47	0.44	3.23	104.01	0.000	0.701	12.99	0.00	0.0000	0.0000	0.0000	0.00
26	STINGER	-16.57	0.01	4.34	113.12	0.892	0.000	12.97	0.00	0.0000	0.0000	0.0000	0.00
29	STINGER	-26.50	-1.03	9.73	123.11	1.707	0.000	12.94	0.00	0.0000	0.0000	0.0000	0.00
31	STINGER	-37.13	-3.57	13.81	134.04	0.184	0.000	12.96	0.00	0.0000	0.0000	0.0000	0.00
33	STINGER	-40.06	-4.31	14.15	137.06	0.000	0.413	12.96	0.00	0.0000	0.0000	0.0000	0.00
35	SAGBEND	-46.07	-5.82	14.09	143.26	0.000	0.000	12.96	0.00	0.0000	0.0000	0.0000	0.00
36	SAGBEND	-51.94	-7.29	14.02	149.31	0.000	0.000	12.95	0.00	0.0000	0.0000	0.0000	0.00
37	SAGBEND	-57.81	-8.76	13.95	155.36	0.000	0.000	12.95	0.00	0.0000	0.0000	0.0000	0.00
38	SAGBEND	-63.68	-10.21	13.88	161.41	0.000	0.000	12.95	0.00	0.0000	0.0000	0.0000	0.00
39	SAGBEND	-69.56	-11.66	13.81	167.46	0.000	0.000	12.94	0.00	0.0000	0.0000	0.0000	0.00
40	SAGBEND	-75.43	-13.10	13.75	173.51	0.000	0.000	12.94	0.00	0.0000	0.0000	0.0000	0.00
41	SAGBEND	-81.31	-14.53	13.68	179.56	0.000	0.000	12.94	0.00	0.0000	0.0000	0.0000	0.00
42	SAGBEND	-87.19	-15.96	13.61	185.61	0.000	0.000	12.93	0.00	0.0000	0.0000	0.0000	0.00
43	SAGBEND	-93.07	-17.38	13.54	191.66	0.000	0.000	12.93	0.00	0.0000	0.0000	0.0000	0.00
44	SAGBEND	-98.95	-18.79	13.47	197.71	0.000	0.000	12.92	0.00	0.0000	0.0000	0.0000	0.00
45	SAGBEND	-104.84	-20.20	13.41	203.76	0.000	0.000	12.92	0.00	0.0000	0.0000	0.0000	0.00
46	SAGBEND	-110.72	-21.60	13.34	209.81	0.000	0.000	12.92	0.00	0.0000	0.0000	0.0000	0.00
47	SAGBEND	-116.61	-22.99	13.27	215.86	0.000	0.000	12.91	0.00	0.0000	0.0000	0.0000	0.00
48	SAGBEND	-122.50	-24.38	13.20	221.91	0.000	0.000	12.91	0.00	0.0000	0.0000	0.0000	0.00
49	SAGBEND	-128.39	-25.75	13.13	227.96	0.000	0.000	12.91	0.00	0.0000	0.0000	0.0000	0.00
50	SAGBEND	-134.29	-27.13	13.06	234.01	0.000	0.000	12.90	0.00	0.0000	0.0000	0.0000	0.00
51	SAGBEND	-140.18	-28.49	13.00	240.06	0.000	0.000	12.90	0.00	0.0000	0.0000	0.0000	0.00
52	SAGBEND	-146.08	-29.85	12.93	246.11	0.000	0.000	12.90	0.00	0.0000	0.0000	0.0000	0.00
53	SAGBEND	-151.97	-31.20	12.86	252.16	0.000	0.000	12.89	0.00	0.0000	0.0000	0.0000	0.00
54	SAGBEND	-157.87	-32.54	12.79	258.21	0.000	0.000	12.89	0.00	0.0000	0.0000	0.0000	0.00
55	SAGBEND	-163.77	-33.88	12.72	264.26	0.000	0.000	12.89	0.00	0.0000	0.0000	0.0000	0.00
56	SAGBEND	-169.67	-35.20	12.65	270.31	0.000	0.000	12.88	0.00	0.0000	0.0000	0.0000	0.00
57	SAGBEND	-175.58	-36.53	12.58	276.36	0.000	0.000	12.88	0.00	0.0000	0.0000	0.0000	0.00
58	SAGBEND	-181.48	-37.84	12.52	282.41	0.000	0.000	12.87	0.00	0.0000	0.0000	0.0000	0.00
59	SAGBEND	-185.20	-38.66	12.47	286.21	0.000	0.000	12.87	0.00	0.0000	0.0000	0.0000	0.00
60	SAGBEND	-188.91	-39.48	12.43	290.02	0.000	0.000	12.87	0.00	0.0000	0.0000	0.0000	0.00

S T A T I C P I P E C O O R D I N A T E S, F O R C E S A N D S T R A I N S

NODE NO.	PIPE SECTION	X COORD (M)	Y COORD (M)	VERT ANGLE (DEG)	PIPE LENGTH (M)	SUPPORT REACTION (KN)	SEPARA -TION (M)	AXIAL TENSION (KN)	BENDING MOMENT (KN-M)	TENSILE STRAIN (PCT)	BENDING STRAIN (PCT)	TOTAL STRAIN (PCT)	PERCNT ALLOW (PCT)
61	SAGBEND	-193.31	-40.38	10.57	294.51	0.000	0.000	12.79	0.00	0.0000	0.0000	0.0000	0.00
62	SAGBEND	-199.28	-41.36	8.03	300.56	0.000	0.000	12.69	0.00	0.0000	0.0000	0.0000	0.00
63	SAGBEND	-205.29	-42.07	5.46	306.61	0.000	0.000	12.63	0.00	0.0000	0.0000	0.0000	0.00
64	SAGBEND	-211.33	-42.51	2.85	312.66	0.000	0.000	12.58	0.00	0.0000	0.0000	0.0000	0.00
65	SEABED	-217.37	-42.67	0.18	318.71	0.233	0.000	12.57	0.01	0.0000	0.0000	0.0000	0.00
66	SEABED	-223.42	-42.67	0.02	324.76	0.569	0.000	12.57	0.01	0.0000	0.0000	0.0000	0.00
67	SEABED	-229.47	-42.67	0.01	330.81	0.572	0.000	12.57	0.00	0.0000	0.0000	0.0000	0.00
68	SEABED	-235.52	-42.67	0.00	336.86	0.572	0.000	12.57	0.00	0.0000	0.0000	0.0000	0.00
69	SEABED	-241.57	-42.67	0.00	342.91	0.572	0.000	12.57	0.00	0.0000	0.0000	0.0000	0.00
70	SEABED	-247.62	-42.67	0.00	348.96	0.572	0.000	12.57	0.00	0.0000	0.0000	0.0000	0.00
71	SEABED	-253.67	-42.67	0.00	355.01	0.572	0.000	12.57	0.00	0.0000	0.0000	0.0000	0.00
72	SEABED	-259.72	-42.67	0.00	361.06	0.572	0.000	12.57	0.00	0.0000	0.0000	0.0000	0.00
73	SEABED	-265.77	-42.67	0.00	367.11	0.572	0.000	12.57	0.00	0.0000	0.0000	0.0000	0.00
74	SEABED	-271.82	-42.67	0.00	373.16	0.572	0.000	12.57	0.00	0.0000	0.0000	0.0000	0.00
75	SEABED	-277.87	-42.67	0.00	379.21	0.572	0.000	12.57	0.00	0.0000	0.0000	0.0000	0.00
76	SEABED	-283.92	-42.67	0.00	385.26	0.572	0.000	12.57	0.00	0.0000	0.0000	0.0000	0.00
77	SEABED	-289.97	-42.67	0.00	391.31	0.572	0.000	12.57	0.00	0.0000	0.0000	0.0000	0.00
78	SEABED	-296.02	-42.67	0.00	397.36	0.572	0.000	12.57	0.00	0.0000	0.0000	0.0000	0.00
79	SEABED	-302.07	-42.67	0.00	403.41	0.572	0.000	12.57	0.00	0.0000	0.0000	0.0000	0.00
80	SEABED	-308.12	-42.67	0.00	409.46	0.572	0.000	12.57	0.00	0.0000	0.0000	0.0000	0.00
81	SEABED	-314.17	-42.67	0.00	415.51	0.572	0.000	12.57	0.00	0.0000	0.0000	0.0000	0.00
82	SEABED	-320.22	-42.67	0.00	421.56	0.572	0.000	12.57	0.00	0.0000	0.0000	0.0000	0.00
83	SEABED	-326.27	-42.67	0.00	427.61	0.572	0.000	12.57	0.00	0.0000	0.0000	0.0000	0.00
84	SEABED	-332.32	-42.67	0.00	433.66	0.572	0.000	12.57	0.00	0.0000	0.0000	0.0000	0.00
85	SEABED	-338.37	-42.67	0.00	439.71	0.572	0.000	12.57	0.00	0.0000	0.0000	0.0000	0.00
86	SEABED	-344.42	-42.67	0.00	445.76	0.572	0.000	12.57	0.00	0.0000	0.0000	0.0000	0.00
87	SEABED	-350.47	-42.67	0.00	451.81	0.572	0.000	12.57	0.00	0.0000	0.0000	0.0000	0.00
88	SEABED	-356.52	-42.67	0.00	457.86	0.572	0.000	12.57	0.00	0.0000	0.0000	0.0000	0.00
89	SEABED	-362.57	-42.67	0.00	463.91	0.572	0.000	12.57	0.00	0.0000	0.0000	0.0000	0.00
90	SEABED	-368.62	-42.67	0.00	469.96	0.572	0.000	12.57	0.00	0.0000	0.0000	0.0000	0.00
91	SEABED	-374.67	-42.67	0.00	476.01	0.572	0.000	12.57	0.00	0.0000	0.0000	0.0000	0.00
92	SEABED	-380.72	-42.67	0.00	482.06	0.572	0.000	12.57	0.00	0.0000	0.0000	0.0000	0.00
93	SEABED	-386.77	-42.67	0.00	488.11	0.572	0.000	12.57	0.00	0.0000	0.0000	0.0000	0.00
94	SEABED	-392.82	-42.67	0.00	494.16	0.572	0.000	12.57	0.00	0.0000	0.0000	0.0000	0.00
95	SEABED	-398.87	-42.67	0.00	500.21	0.572	0.000	12.57	0.00	0.0000	0.0000	0.0000	0.00
96	SEABED	-404.92	-42.67	0.00	506.26	0.572	0.000	12.57	0.00	0.0000	0.0000	0.0000	0.00
97	SEABED	-410.97	-42.67	0.00	512.31	0.572	0.000	12.57	0.00	0.0000	0.0000	0.0000	0.00
98	SEABED	-417.02	-42.67	0.00	518.36	0.572	0.000	12.57	0.00	0.0000	0.0000	0.0000	0.00
99	SEABED	-423.07	-42.67	0.00	524.41	0.572	0.000	12.57	0.00	0.0000	0.0000	0.0000	0.00
100	SEABED	-429.12	-42.67	0.00	530.46	0.572	0.000	12.57	0.00	0.0000	0.0000	0.0000	0.00
101	SEABED	-435.17	-42.67	0.00	536.51	0.572	0.000	12.57	0.00	0.0000	0.0000	0.0000	0.00
102	SEABED	-441.22	-42.67	0.00	542.56	0.572	0.000	12.57	0.00	0.0000	0.0000	0.0000	0.00
103	SEABED	-447.27	-42.67	0.00	548.61	0.572	0.000	12.57	0.00	0.0000	0.0000	0.0000	0.00
104	SEABED	-453.32	-42.67	0.00	554.66	0.572	0.000	12.57	0.00	0.0000	0.0000	0.0000	0.00

S T A T I C P I P E C O O R D I N A T E S, F O R C E S A N D S T R A I N S

NODE NO.	PIPE SECTION	X COORD (M)	Y COORD (M)	VERT ANGLE (DEG)	PIPE LENGTH (M)	SUPPORT REACTION (KN)	SEPARA -TION (M)	AXIAL TENSION (KN)	BENDING MOMENT (KN-M)	TENSILE STRAIN (PCT)	BENDING STRAIN (PCT)	TOTAL STRAIN (PCT)	PERCNT ALLOW (PCT)
105	SEABED	-459.37	-42.67	0.00	560.71	0.572	0.000	12.57	0.00	0.0000	0.0000	0.0000	0.00
106	SEABED	-465.42	-42.67	0.00	566.76	0.572	0.000	12.57	0.00	0.0000	0.0000	0.0000	0.00
107	SEABED	-471.47	-42.67	0.00	572.81	0.572	0.000	12.57	0.00	0.0000	0.0000	0.0000	0.00
108	SEABED	-477.52	-42.67	0.00	578.86	0.572	0.000	12.57	0.00	0.0000	0.0000	0.0000	0.00
109	SEABED	-483.57	-42.67	0.00	584.91	0.572	0.000	12.57	0.00	0.0000	0.0000	0.0000	0.00
110	SEABED	-489.62	-42.67	0.00	590.96	0.572	0.000	12.57	0.00	0.0000	0.0000	0.0000	0.00
111	SEABED	-495.67	-42.67	0.00	597.01	0.572	0.000	12.57	0.00	0.0000	0.0000	0.0000	0.00
112	SEABED	-501.72	-42.67	0.00	603.06	0.572	0.000	12.57	0.00	0.0000	0.0000	0.0000	0.00
113	SEABED	-507.77	-42.67	0.00	609.11	0.572	0.000	12.57	0.00	0.0000	0.0000	0.0000	0.00
114	SEABED	-513.82	-42.67	0.00	615.16	0.572	0.000	12.57	0.00	0.0000	0.0000	0.0000	0.00
115	SEABED	-519.87	-42.67	0.00	621.21	0.572	0.000	12.57	0.00	0.0000	0.0000	0.0000	0.00
116	SEABED	-525.92	-42.67	0.00	627.26	0.572	0.000	12.57	0.00	0.0000	0.0000	0.0000	0.00
117	SEABED	-531.97	-42.67	0.00	633.31	0.572	0.000	12.57	0.00	0.0000	0.0000	0.0000	0.00
118	SEABED	-538.02	-42.67	0.00	639.36	0.572	0.000	12.57	0.00	0.0000	0.0000	0.0000	0.00
119	SEABED	-544.08	-42.67	0.00	645.41	0.572	0.000	12.57	0.00	0.0000	0.0000	0.0000	0.00
120	SEABED	-550.13	-42.67	0.00	651.46	0.572	0.000	12.57	0.00	0.0000	0.0000	0.0000	0.00
121	SEABED	-556.18	-42.67	0.00	657.51	0.572	0.000	12.57	0.00	0.0000	0.0000	0.0000	0.00
122	SEABED	-562.23	-42.67	0.00	663.56	0.572	0.000	12.57	0.00	0.0000	0.0000	0.0000	0.00
123	SEABED	-568.28	-42.67	0.00	669.61	0.572	0.000	12.57	0.00	0.0000	0.0000	0.0000	0.00
124	SEABED	-574.33	-42.67	0.00	675.66	0.572	0.000	12.57	0.00	0.0000	0.0000	0.0000	0.00
125	SEABED	-580.38	-42.67	0.00	681.71	0.483	0.000	12.57	0.00	0.0000	0.0000	0.0000	0.00
126	SEABED	-584.53	-42.67	-0.02	685.87	0.386	0.000	12.57	0.00	0.0000	0.0000	0.0000	0.00
127	SEABED	-588.68	-42.67	-0.21	690.02	0.000	0.000	12.57	0.00	0.0000	0.0000	0.0000	0.00

S T A T I C P I P E C O O R D I N A T E S, F O R C E S A N D S T R A I N S

NODE NO.	PIPE SECTION	X COORD (M)	Y COORD (M)	VERT ANGLE (DEG)	PIPE LENGTH (M)	SUPPORT REACTION (KN)	SEPARA -TION (M)	AXIAL TENSION (KN)	BENDING MOMENT (KN-M)	TENSILE STRAIN (PCT)	BENDING STRAIN (PCT)	TOTAL STRAIN (PCT)	PERCNT ALLOW (PCT)
1	LAYBARGE	96.31	6.41	1.93	0.00	9.926	0.000	0.00	2.74	0.0000	0.0021	0.0021	0.00
3	LAYBARGE	84.28	6.05	1.58	12.04	24.188	0.000	-0.73	-19.27	0.0000	-0.0144	0.0144	0.00
5	LAYBARGE	73.45	5.73	1.90	22.87	24.253	0.000	-1.39	-29.16	-0.0001	-0.0218	0.0219	0.00
7	TENSIONR	60.10	5.24	2.31	36.23	32.241	0.000	20.91	-24.20	0.0010	-0.0181	0.0191	0.00
9	LAYBARGE	51.10	4.87	2.19	45.24	0.000	0.000	20.18	31.62	0.0009	0.0236	0.0246	0.00
10	LAYBARGE	46.45	4.70	1.90	49.89	10.498	0.000	19.87	12.54	0.0009	0.0094	0.0103	0.00
12	LAYBARGE	35.36	4.31	2.62	60.99	28.350	0.000	18.87	-80.39	0.0009	-0.0601	0.0610	0.00
14	LAYBARGE	25.34	3.64	5.23	71.03	36.030	0.000	17.33	-126.26	0.0008	-0.0944	0.0952	0.00
16	LAYBARGE	19.31	3.01	6.50	77.09	0.000	0.000	16.44	-40.41	0.0008	-0.0302	0.0310	0.00
17	LAYBARGE	8.88	1.76	7.23	87.60	30.242	0.000	13.91	-42.17	0.0006	-0.0315	0.0322	0.00
19	LAYBARGE	4.88	1.24	7.42	91.63	0.000	0.000	12.92	8.65	0.0006	0.0065	0.0071	0.00
20	LAYBARGE	3.06	1.00	7.33	93.47	0.000	0.386	12.44	24.79	0.0006	0.0185	0.0191	0.00
24	STINGER	-7.43	-0.26	6.55	104.04	10.256	0.000	10.17	0.00	0.0005	0.0000	0.0005	0.00
26	STINGER	-16.57	0.01	1.95	113.19	1.348	0.000	10.26	0.00	0.0000	0.0000	0.0000	0.00
29	STINGER	-26.50	-0.97	9.14	123.17	1.289	0.000	10.26	0.00	0.0000	0.0000	0.0000	0.00
31	STINGER	-37.16	-3.36	13.36	134.10	0.270	0.000	10.27	0.00	0.0000	0.0000	0.0000	0.00
33	STINGER	-40.10	-4.10	14.03	137.13	0.000	0.377	10.27	0.00	0.0000	0.0000	0.0000	0.00

35	SAGBEND	-46.11	-5.60	13.96	143.33	0.000	0.000	10.26	0.00	0.0000	0.0000	0.0000	0.00
36	SAGBEND	-51.98	-7.05	13.87	149.38	0.000	0.000	10.26	0.00	0.0000	0.0000	0.0000	0.00
37	SAGBEND	-57.86	-8.50	13.79	155.43	0.000	0.000	10.26	0.00	0.0000	0.0000	0.0000	0.00
38	SAGBEND	-63.74	-9.94	13.70	161.48	0.000	0.000	10.25	0.00	0.0000	0.0000	0.0000	0.00
39	SAGBEND	-69.61	-11.36	13.61	167.53	0.000	0.000	10.25	0.00	0.0000	0.0000	0.0000	0.00
40	SAGBEND	-75.50	-12.78	13.53	173.58	0.000	0.000	10.24	0.00	0.0000	0.0000	0.0000	0.00
41	SAGBEND	-81.38	-14.19	13.44	179.63	0.000	0.000	10.24	0.00	0.0000	0.0000	0.0000	0.00
42	SAGBEND	-87.26	-15.60	13.36	185.68	0.000	0.000	10.24	0.00	0.0000	0.0000	0.0000	0.00
43	SAGBEND	-93.15	-16.99	13.27	191.73	0.000	0.000	10.23	0.00	0.0000	0.0000	0.0000	0.00
44	SAGBEND	-99.04	-18.37	13.18	197.78	0.000	0.000	10.23	0.00	0.0000	0.0000	0.0000	0.00
45	SAGBEND	-104.93	-19.75	13.10	203.83	0.000	0.000	10.23	0.00	0.0000	0.0000	0.0000	0.00
46	SAGBEND	-110.83	-21.11	13.01	209.88	0.000	0.000	10.22	0.00	0.0000	0.0000	0.0000	0.00
47	SAGBEND	-116.72	-22.47	12.92	215.93	0.000	0.000	10.22	0.00	0.0000	0.0000	0.0000	0.00
48	SAGBEND	-122.62	-23.82	12.84	221.98	0.000	0.000	10.22	0.00	0.0000	0.0000	0.0000	0.00
49	SAGBEND	-128.52	-25.16	12.75	228.03	0.000	0.000	10.21	0.00	0.0000	0.0000	0.0000	0.00
50	SAGBEND	-134.42	-26.49	12.66	234.08	0.000	0.000	10.21	0.00	0.0000	0.0000	0.0000	0.00
51	SAGBEND	-140.32	-27.81	12.58	240.13	0.000	0.000	10.21	0.00	0.0000	0.0000	0.0000	0.00
52	SAGBEND	-146.23	-29.13	12.49	246.18	0.000	0.000	10.20	0.00	0.0000	0.0000	0.0000	0.00
53	SAGBEND	-152.14	-30.43	12.40	252.23	0.000	0.000	10.20	0.00	0.0000	0.0000	0.0000	0.00
54	SAGBEND	-158.05	-31.73	12.32	258.28	0.000	0.000	10.20	0.00	0.0000	0.0000	0.0000	0.00
55	SAGBEND	-163.96	-33.01	12.23	264.33	0.000	0.000	10.19	0.00	0.0000	0.0000	0.0000	0.00
56	SAGBEND	-169.87	-34.29	12.14	270.38	0.000	0.000	10.19	0.00	0.0000	0.0000	0.0000	0.00
57	SAGBEND	-175.79	-35.56	12.06	276.43	0.000	0.000	10.19	0.00	0.0000	0.0000	0.0000	0.00
58	SAGBEND	-181.71	-36.82	11.97	282.48	0.000	0.000	10.18	0.00	0.0000	0.0000	0.0000	0.00
59	SAGBEND	-187.63	-38.07	11.88	288.53	0.000	0.000	10.18	0.00	0.0000	0.0000	0.0000	0.00
60	SAGBEND	-193.55	-39.31	11.80	294.58	0.000	0.000	10.18	0.00	0.0000	0.0000	0.0000	0.00

S T A T I C P I P E C O O R D I N A T E S, F O R C E S A N D S T R A I N S

NODE NO.	PIPE SECTION	X COORD (M)	Y COORD (M)	VERT ANGLE (DEG)	PIPE LENGTH (M)	SUPPORT REACTION (KN)	SEPARA -TION (M)	AXIAL TENSION (KN)	BENDING MOMENT (KN-M)	TENSILE STRAIN (PCT)	BENDING STRAIN (PCT)	TOTAL STRAIN (PCT)	PERCNT ALLOW (PCT)
61	SAGBEND	-198.94	-40.43	11.72	300.09	0.000	0.000	10.17	0.00	0.0000	0.0000	0.0000	0.00
62	SAGBEND	-205.43	-41.57	8.24	306.68	0.000	0.000	10.06	0.00	0.0000	0.0000	0.0000	0.00
63	SAGBEND	-211.44	-42.27	5.00	312.73	0.000	0.000	10.00	0.00	0.0000	0.0000	0.0000	0.00
64	SAGBEND	-217.48	-42.63	1.75	318.78	0.052	0.000	9.97	0.00	0.0000	0.0000	0.0000	0.00
65	SEABED	-223.53	-42.67	0.03	324.83	0.508	0.000	9.96	0.01	0.0000	0.0000	0.0000	0.00
66	SEABED	-229.58	-42.67	0.01	330.88	0.572	0.000	9.96	0.00	0.0000	0.0000	0.0000	0.00
67	SEABED	-235.63	-42.67	0.00	336.93	0.572	0.000	9.96	0.00	0.0000	0.0000	0.0000	0.00
68	SEABED	-241.68	-42.67	0.00	342.98	0.572	0.000	9.96	0.00	0.0000	0.0000	0.0000	0.00
69	SEABED	-247.73	-42.67	0.00	349.03	0.572	0.000	9.96	0.00	0.0000	0.0000	0.0000	0.00
70	SEABED	-253.78	-42.67	0.00	355.08	0.572	0.000	9.96	0.00	0.0000	0.0000	0.0000	0.00
71	SEABED	-259.83	-42.67	0.00	361.13	0.572	0.000	9.96	0.00	0.0000	0.0000	0.0000	0.00
72	SEABED	-265.88	-42.67	0.00	367.18	0.572	0.000	9.96	0.00	0.0000	0.0000	0.0000	0.00
73	SEABED	-271.93	-42.67	0.00	373.23	0.572	0.000	9.96	0.00	0.0000	0.0000	0.0000	0.00
74	SEABED	-277.98	-42.67	0.00	379.28	0.572	0.000	9.96	0.00	0.0000	0.0000	0.0000	0.00
75	SEABED	-284.03	-42.67	0.00	385.33	0.572	0.000	9.96	0.00	0.0000	0.0000	0.0000	0.00
76	SEABED	-290.08	-42.67	0.00	391.38	0.572	0.000	9.96	0.00	0.0000	0.0000	0.0000	0.00
77	SEABED	-296.13	-42.67	0.00	397.43	0.572	0.000	9.96	0.00	0.0000	0.0000	0.0000	0.00
78	SEABED	-302.18	-42.67	0.00	403.48	0.572	0.000	9.96	0.00	0.0000	0.0000	0.0000	0.00
79	SEABED	-308.23	-42.67	0.00	409.53	0.572	0.000	9.96	0.00	0.0000	0.0000	0.0000	0.00
80	SEABED	-314.28	-42.67	0.00	415.58	0.572	0.000	9.96	0.00	0.0000	0.0000	0.0000	0.00
81	SEABED	-320.33	-42.67	0.00	421.63	0.572	0.000	9.96	0.00	0.0000	0.0000	0.0000	0.00
82	SEABED	-326.38	-42.67	0.00	427.68	0.572	0.000	9.96	0.00	0.0000	0.0000	0.0000	0.00
83	SEABED	-332.43	-42.67	0.00	433.73	0.572	0.000	9.96	0.00	0.0000	0.0000	0.0000	0.00
84	SEABED	-338.48	-42.67	0.00	439.78	0.572	0.000	9.96	0.00	0.0000	0.0000	0.0000	0.00
85	SEABED	-344.53	-42.67	0.00	445.83	0.572	0.000	9.96	0.00	0.0000	0.0000	0.0000	0.00
86	SEABED	-350.58	-42.67	0.00	451.88	0.572	0.000	9.96	0.00	0.0000	0.0000	0.0000	0.00
87	SEABED	-356.63	-42.67	0.00	457.93	0.572	0.000	9.96	0.00	0.0000	0.0000	0.0000	0.00
88	SEABED	-362.68	-42.67	0.00	463.98	0.572	0.000	9.96	0.00	0.0000	0.0000	0.0000	0.00
89	SEABED	-368.73	-42.67	0.00	470.03	0.572	0.000	9.96	0.00	0.0000	0.0000	0.0000	0.00
90	SEABED	-374.78	-42.67	0.00	476.08	0.572	0.000	9.96	0.00	0.0000	0.0000	0.0000	0.00
91	SEABED	-380.83	-42.67	0.00	482.13	0.572	0.000	9.96	0.00	0.0000	0.0000	0.0000	0.00
92	SEABED	-386.88	-42.67	0.00	488.18	0.572	0.000	9.96	0.00	0.0000	0.0000	0.0000	0.00
93	SEABED	-392.93	-42.67	0.00	494.23	0.572	0.000	9.96	0.00	0.0000	0.0000	0.0000	0.00
94	SEABED	-398.98	-42.67	0.00	500.28	0.572	0.000	9.96	0.00	0.0000	0.0000	0.0000	0.00
95	SEABED	-405.03	-42.67	0.00	506.33	0.572	0.000	9.96	0.00	0.0000	0.0000	0.0000	0.00
96	SEABED	-411.08	-42.67	0.00	512.38	0.572	0.000	9.96	0.00	0.0000	0.0000	0.0000	0.00
97	SEABED	-417.13	-42.67	0.00	518.43	0.572	0.000	9.96	0.00	0.0000	0.0000	0.0000	0.00
98	SEABED	-423.18	-42.67	0.00	524.48	0.572	0.000	9.96	0.00	0.0000	0.0000	0.0000	0.00
99	SEABED	-429.23	-42.67	0.00	530.53	0.572	0.000	9.96	0.00	0.0000	0.0000	0.0000	0.00
100	SEABED	-435.28	-42.67	0.00	536.58	0.572	0.000	9.96	0.00	0.0000	0.0000	0.0000	0.00
101	SEABED	-441.33	-42.67	0.00	542.63	0.572	0.000	9.96	0.00	0.0000	0.0000	0.0000	0.00
102	SEABED	-447.38	-42.67	0.00	548.68	0.572	0.000	9.96	0.00	0.0000	0.0000	0.0000	0.00
103	SEABED	-453.43	-42.67	0.00	554.73	0.572	0.000	9.96	0.00	0.0000	0.0000	0.0000	0.00
104	SEABED	-459.48	-42.67	0.00	560.78	0.572	0.000	9.96	0.00	0.0000	0.0000	0.0000	0.00

S T A T I C P I P E C O O R D I N A T E S, F O R C E S A N D S T R A I N S

NODE NO.	PIPE SECTION	X COORD (M)	Y COORD (M)	VERT ANGLE (DEG)	PIPE LENGTH (M)	SUPPORT REACTION (KN)	SEPARA -TION (M)	AXIAL TENSION (KN)	BENDING MOMENT (KN-M)	TENSILE STRAIN (PCT)	BENDING STRAIN (PCT)	TOTAL STRAIN (PCT)	PERCNT ALLOW (PCT)
105	SEABED	-465.53	-42.67	0.00	566.83	0.572	0.000	9.96	0.00	0.0000	0.0000	0.0000	0.00
106	SEABED	-471.58	-42.67	0.00	572.88	0.572	0.000	9.96	0.00	0.0000	0.0000	0.0000	0.00
107	SEABED	-477.63	-42.67	0.00	578.93	0.572	0.000	9.96	0.00	0.0000	0.0000	0.0000	0.00
108	SEABED	-483.68	-42.67	0.00	584.98	0.572	0.000	9.96	0.00	0.0000	0.0000	0.0000	0.00
109	SEABED	-489.73	-42.67	0.00	591.03	0.572	0.000	9.96	0.00	0.0000	0.0000	0.0000	0.00
110	SEABED	-495.78	-42.67	0.00	597.08	0.572	0.000	9.96	0.00	0.0000	0.0000	0.0000	0.00
111	SEABED	-501.83	-42.67	0.00	603.13	0.572	0.000	9.96	0.00	0.0000	0.0000	0.0000	0.00
112	SEABED	-507.88	-42.67	0.00	609.18	0.572	0.000	9.96	0.00	0.0000	0.0000	0.0000	0.00
113	SEABED	-513.93	-42.67	0.00	615.23	0.572	0.000	9.96	0.00	0.0000	0.0000	0.0000	0.00
114	SEABED	-519.98	-42.67	0.00	621.28	0.572	0.000	9.96	0.00	0.0000	0.0000	0.0000	0.00
115	SEABED	-526.03	-42.67	0.00	627.33	0.572	0.000	9.96	0.00	0.0000	0.0000	0.0000	0.00
116	SEABED	-532.08	-42.67	0.00	633.38	0.572	0.000	9.96	0.00	0.0000	0.0000	0.0000	0.00
117	SEABED	-538.13	-42.67	0.00	639.43	0.572	0.000	9.96	0.00	0.0000	0.0000	0.0000	0.00
118	SEABED	-544.18	-42.67	0.00	645.48	0.572	0.000	9.96	0.00	0.0000	0.0000	0.0000	0.00
119	SEABED	-550.23	-42.67	0.00	651.53	0.572	0.000	9.96	0.00	0.0000	0.0000	0.0000	0.00
120	SEABED	-556.28	-42.67	0.00	657.58	0.572	0.000	9.96	0.00	0.0000	0.0000	0.0000	0.00
121	SEABED	-562.33	-42.67	0.00	663.63	0.572	0.000	9.96	0.00	0.0000	0.0000	0.0000	0.00
122	SEABED	-568.38	-42.67	0.00	669.68	0.572	0.000	9.96	0.00	0.0000	0.0000	0.0000	0.00
123	SEABED	-574.43	-42.67	0.00	675.73	0.572	0.000	9.96	0.00	0.0000	0.0000	0.0000	0.00
124	SEABED	-580.48	-42.67	0.00	681.78	0.572	0.000	9.96	0.00	0.0000	0.0000	0.0000	0.00
125	SEABED	-586.53	-42.67	0.00	687.83	0.572	0.000	9.96	0.00	0.0000	0.0000	0.0000	0.00
126	SEABED	-592.58	-42.67	0.00	693.88	0.433	0.000	9.96	0.00	0.0000	0.0000	0.0000	0.00
127	SEABED	-595.69	-42.67	-0.02	696.99	0.286	0.000	9.96	0.00	0.0000	0.0000	0.0000	0.00
128	SEABED	-598.79	-42.67	-0.26	700.09	0.000	0.000	9.96	0.00	0.0000	0.0000	0.0000	0.00

S T A T I C P I P E C O O R D I N A T E S, F O R C E S A N D S T R A I N S

NODE NO.	PIPE SECTION	X COORD (M)	Y COORD (M)	VERT ANGLE (DEG)	PIPE LENGTH (M)	SUPPORT REACTION (KN)	SEPARA -TION (M)	AXIAL TENSION (KN)	BENDING MOMENT (KN-M)	TENSILE STRAIN (PCT)	BENDING STRAIN (PCT)	TOTAL STRAIN (PCT)	PERCNT ALLOW (PCT)
1	LAYBARGE	96.31	6.41	1.93	0.00	9.926	0.000	0.00	2.74	0.0000	0.0021	0.0021	0.00
3	LAYBARGE	84.28	6.05	1.58	12.04	24.185	0.000	-0.73	-19.26	0.0000	-0.0144	0.0144	0.00
5	LAYBARGE	73.45	5.73	1.90	22.87	24.264	0.000	-1.39	-29.19	-0.0001	-0.0218	0.0219	0.00
7	TENSIONR	60.10	5.24	2.31	36.23	32.228	0.000	34.62	-24.13	0.0016	-0.0180	0.0197	0.00
9	LAYBARGE	51.10	4.87	2.19	45.24	0.000	0.000	33.88	31.45	0.0016	0.0235	0.0251	0.00
10	LAYBARGE	46.45	4.70	1.91	49.89	10.385	0.000	33.57	12.63	0.0016	0.0094	0.0110	0.00
12	LAYBARGE	35.36	4.31	2.62	60.99	28.797	0.000	32.57	-80.42	0.0015	-0.0601	0.0617	0.00
14	LAYBARGE	25.34	3.64	5.23	71.03	36.750	0.000	31.03	-126.80	0.0014	-0.0948	0.0963	0.00
16	LAYBARGE	19.31	3.01	6.50	77.09	0.000	0.000	30.14	-40.14	0.0014	-0.0300	0.0314	0.00
17	LAYBARGE	8.88	1.76	7.22	87.60	30.332	0.000	27.61	-42.21	0.0013	-0.0316	0.0329	0.00
19	LAYBARGE	4.88	1.24	7.41	91.63	0.000	0.000	26.62	8.30	0.0012	0.0062	0.0074	0.00
20	LAYBARGE	3.06	1.00	7.33	93.47	0.000	0.386	26.14	24.33	0.0012	0.0182	0.0194	0.00
24	STINGER	-7.43	-0.26	6.56	104.04	8.136	0.000	23.87	0.00	0.0011	0.0000	0.0011	0.00
26	STINGER	-16.57	0.01	2.44	113.19	3.522	0.000	24.06	0.00	0.0000	0.0000	0.0000	0.00
29	STINGER	-26.49	-1.14	9.51	123.19	2.482	0.000	24.09	0.00	0.0000	0.0000	0.0000	0.00
31	STINGER	-37.17	-3.49	12.40	134.12	0.000	0.401	24.11	0.00	0.0000	0.0000	0.0000	0.00
33	STINGER	-40.09	-4.13	12.37	137.11	0.000	0.964	24.11	0.00	0.0000	0.0000	0.0000	0.00
35	SAGBEND	-46.16	-5.46	12.34	143.33	0.000	0.000	24.11	0.00	0.0000	0.0000	0.0000	0.00
36	SAGBEND	-52.07	-6.75	12.30	149.38	0.000	0.000	24.10	0.00	0.0000	0.0000	0.0000	0.00
37	SAGBEND	-57.99	-8.04	12.26	155.43	0.000	0.000	24.10	0.00	0.0000	0.0000	0.0000	0.00
38	SAGBEND	-63.90	-9.32	12.23	161.48	0.000	0.000	24.10	0.00	0.0000	0.0000	0.0000	0.00
39	SAGBEND	-69.81	-10.60	12.19	167.53	0.000	0.000	24.09	0.00	0.0000	0.0000	0.0000	0.00
40	SAGBEND	-75.73	-11.88	12.15	173.58	0.000	0.000	24.09	0.00	0.0000	0.0000	0.0000	0.00
41	SAGBEND	-81.64	-13.15	12.12	179.63	0.000	0.000	24.09	0.00	0.0000	0.0000	0.0000	0.00
42	SAGBEND	-87.56	-14.42	12.08	185.68	0.000	0.000	24.08	0.00	0.0000	0.0000	0.0000	0.00
43	SAGBEND	-93.47	-15.68	12.04	191.73	0.000	0.000	24.08	0.00	0.0000	0.0000	0.0000	0.00
44	SAGBEND	-99.39	-16.94	12.01	197.78	0.000	0.000	24.08	0.00	0.0000	0.0000	0.0000	0.00
45	SAGBEND	-105.31	-18.20	11.97	203.83	0.000	0.000	24.07	0.00	0.0000	0.0000	0.0000	0.00
46	SAGBEND	-111.23	-19.45	11.93	209.88	0.000	0.000	24.07	0.00	0.0000	0.0000	0.0000	0.00
47	SAGBEND	-117.15	-20.70	11.89	215.93	0.000	0.000	24.07	0.00	0.0000	0.0000	0.0000	0.00
48	SAGBEND	-123.07	-21.94	11.86	221.98	0.000	0.000	24.06	0.00	0.0000	0.0000	0.0000	0.00
49	SAGBEND	-128.99	-23.19	11.82	228.03	0.000	0.000	24.06	0.00	0.0000	0.0000	0.0000	0.00
50	SAGBEND	-134.91	-24.42	11.78	234.08	0.000	0.000	24.06	0.00	0.0000	0.0000	0.0000	0.00

51	SAGBEND	-140.83	-25.66	11.75	240.13	0.000	0.000	24.05	0.00	0.0000	0.0000	0.0000	0.00
52	SAGBEND	-146.76	-26.89	11.71	246.18	0.000	0.000	24.05	0.00	0.0000	0.0000	0.0000	0.00
53	SAGBEND	-152.68	-28.11	11.67	252.23	0.000	0.000	24.05	0.00	0.0000	0.0000	0.0000	0.00
54	SAGBEND	-158.61	-29.34	11.64	258.28	0.000	0.000	24.05	0.00	0.0000	0.0000	0.0000	0.00
55	SAGBEND	-164.53	-30.55	11.60	264.33	0.000	0.000	24.04	0.00	0.0000	0.0000	0.0000	0.00
56	SAGBEND	-170.46	-31.77	11.56	270.38	0.000	0.000	24.04	0.00	0.0000	0.0000	0.0000	0.00
57	SAGBEND	-176.39	-32.98	11.53	276.43	0.000	0.000	24.04	0.00	0.0000	0.0000	0.0000	0.00
58	SAGBEND	-182.32	-34.19	11.49	282.48	0.000	0.000	24.03	0.00	0.0000	0.0000	0.0000	0.00
59	SAGBEND	-188.25	-35.39	11.45	288.53	0.000	0.000	24.03	0.00	0.0000	0.0000	0.0000	0.00
60	SAGBEND	-194.18	-36.59	11.42	294.58	0.000	0.000	24.03	0.00	0.0000	0.0000	0.0000	0.00

S T A T I C P I P E C O O R D I N A T E S, F O R C E S A N D S T R A I N S

NODE NO.	PIPE SECTION	X COORD (M)	Y COORD (M)	VERT ANGLE (DEG)	PIPE LENGTH (M)	SUPPORT REACTION (KN)	SEPARA -TION (M)	AXIAL TENSION (KN)	BENDING MOMENT (KN-M)	TENSILE STRAIN (PCT)	BENDING STRAIN (PCT)	TOTAL STRAIN (PCT)	PERCNT ALLOW (PCT)
61	SAGBEND	-199.57	-37.68	11.38	300.09	0.000	0.000	24.02	0.00	0.0000	0.0000	0.0000	0.00
62	SAGBEND	-206.05	-38.90	9.92	306.68	0.000	0.000	23.91	0.00	0.0000	0.0000	0.0000	0.00
63	SAGBEND	-212.02	-39.87	8.56	312.73	0.000	0.000	23.82	0.00	0.0000	0.0000	0.0000	0.00
64	SAGBEND	-218.02	-40.70	7.20	318.78	0.000	0.000	23.74	0.00	0.0000	0.0000	0.0000	0.00
65	SAGBEND	-224.03	-41.38	5.82	324.83	0.000	0.000	23.67	0.00	0.0000	0.0000	0.0000	0.00
66	SAGBEND	-230.05	-41.92	4.44	330.88	0.000	0.000	23.62	0.00	0.0000	0.0000	0.0000	0.00
67	SAGBEND	-236.09	-42.32	3.05	336.93	0.000	0.000	23.58	0.00	0.0000	0.0000	0.0000	0.00
68	SAGBEND	-242.14	-42.57	1.66	342.98	0.000	0.000	23.56	0.00	0.0000	0.0000	0.0000	0.00
69	SAGBEND	-248.18	-42.67	0.23	349.03	0.186	0.000	23.55	0.01	0.0000	0.0000	0.0000	0.00
70	SEABED	-254.23	-42.67	0.02	355.08	0.561	0.000	23.55	0.01	0.0000	0.0000	0.0000	0.00
71	SEABED	-260.28	-42.67	0.00	361.13	0.572	0.000	23.55	0.00	0.0000	0.0000	0.0000	0.00
72	SEABED	-266.33	-42.67	0.00	367.18	0.572	0.000	23.55	0.00	0.0000	0.0000	0.0000	0.00
73	SEABED	-272.38	-42.67	0.00	373.23	0.572	0.000	23.55	0.00	0.0000	0.0000	0.0000	0.00
74	SEABED	-278.43	-42.67	0.00	379.28	0.572	0.000	23.55	0.00	0.0000	0.0000	0.0000	0.00
75	SEABED	-284.48	-42.67	0.00	385.33	0.572	0.000	23.55	0.00	0.0000	0.0000	0.0000	0.00
76	SEABED	-290.53	-42.67	0.00	391.38	0.572	0.000	23.55	0.00	0.0000	0.0000	0.0000	0.00
77	SEABED	-296.58	-42.67	0.00	397.43	0.572	0.000	23.55	0.00	0.0000	0.0000	0.0000	0.00
78	SEABED	-302.63	-42.67	0.00	403.48	0.572	0.000	23.55	0.00	0.0000	0.0000	0.0000	0.00
79	SEABED	-308.68	-42.67	0.00	409.53	0.572	0.000	23.55	0.00	0.0000	0.0000	0.0000	0.00
80	SEABED	-314.73	-42.67	0.00	415.58	0.572	0.000	23.55	0.00	0.0000	0.0000	0.0000	0.00
81	SEABED	-320.78	-42.67	0.00	421.63	0.572	0.000	23.55	0.00	0.0000	0.0000	0.0000	0.00
82	SEABED	-326.83	-42.67	0.00	427.68	0.572	0.000	23.55	0.00	0.0000	0.0000	0.0000	0.00
83	SEABED	-332.88	-42.67	0.00	433.73	0.572	0.000	23.55	0.00	0.0000	0.0000	0.0000	0.00
84	SEABED	-338.93	-42.67	0.00	439.78	0.572	0.000	23.55	0.00	0.0000	0.0000	0.0000	0.00
85	SEABED	-344.98	-42.67	0.00	445.83	0.572	0.000	23.55	0.00	0.0000	0.0000	0.0000	0.00
86	SEABED	-351.03	-42.67	0.00	451.88	0.572	0.000	23.55	0.00	0.0000	0.0000	0.0000	0.00
87	SEABED	-357.08	-42.67	0.00	457.93	0.572	0.000	23.55	0.00	0.0000	0.0000	0.0000	0.00
88	SEABED	-363.14	-42.67	0.00	463.98	0.572	0.000	23.55	0.00	0.0000	0.0000	0.0000	0.00
89	SEABED	-369.19	-42.67	0.00	470.03	0.572	0.000	23.55	0.00	0.0000	0.0000	0.0000	0.00
90	SEABED	-375.24	-42.67	0.00	476.08	0.572	0.000	23.55	0.00	0.0000	0.0000	0.0000	0.00
91	SEABED	-381.29	-42.67	0.00	482.13	0.572	0.000	23.55	0.00	0.0000	0.0000	0.0000	0.00
92	SEABED	-387.34	-42.67	0.00	488.18	0.572	0.000	23.55	0.00	0.0000	0.0000	0.0000	0.00
93	SEABED	-393.39	-42.67	0.00	494.23	0.572	0.000	23.55	0.00	0.0000	0.0000	0.0000	0.00
94	SEABED	-399.44	-42.67	0.00	500.28	0.572	0.000	23.55	0.00	0.0000	0.0000	0.0000	0.00
95	SEABED	-405.49	-42.67	0.00	506.33	0.572	0.000	23.55	0.00	0.0000	0.0000	0.0000	0.00
96	SEABED	-411.54	-42.67	0.00	512.38	0.572	0.000	23.55	0.00	0.0000	0.0000	0.0000	0.00
97	SEABED	-417.59	-42.67	0.00	518.43	0.572	0.000	23.55	0.00	0.0000	0.0000	0.0000	0.00
98	SEABED	-423.64	-42.67	0.00	524.48	0.572	0.000	23.55	0.00	0.0000	0.0000	0.0000	0.00
99	SEABED	-429.69	-42.67	0.00	530.53	0.572	0.000	23.55	0.00	0.0000	0.0000	0.0000	0.00
100	SEABED	-435.74	-42.67	0.00	536.58	0.572	0.000	23.55	0.00	0.0000	0.0000	0.0000	0.00
101	SEABED	-441.79	-42.67	0.00	542.63	0.572	0.000	23.55	0.00	0.0000	0.0000	0.0000	0.00
102	SEABED	-447.84	-42.67	0.00	548.68	0.572	0.000	23.55	0.00	0.0000	0.0000	0.0000	0.00
103	SEABED	-453.89	-42.67	0.00	554.73	0.572	0.000	23.55	0.00	0.0000	0.0000	0.0000	0.00
104	SEABED	-459.94	-42.67	0.00	560.78	0.572	0.000	23.55	0.00	0.0000	0.0000	0.0000	0.00

S T A T I C P I P E C O O R D I N A T E S, F O R C E S A N D S T R A I N S

NODE NO.	PIPE SECTION	X COORD (M)	Y COORD (M)	VERT ANGLE (DEG)	PIPE LENGTH (M)	SUPPORT REACTION (KN)	SEPARA -TION (M)	AXIAL TENSION (KN)	BENDING MOMENT (KN-M)	TENSILE STRAIN (PCT)	BENDING STRAIN (PCT)	TOTAL STRAIN (PCT)	PERCNT ALLOW (PCT)
105	SEABED	-465.99	-42.67	0.00	566.83	0.572	0.000	23.55	0.00	0.0000	0.0000	0.0000	0.00
106	SEABED	-472.04	-42.67	0.00	572.88	0.572	0.000	23.55	0.00	0.0000	0.0000	0.0000	0.00
107	SEABED	-478.09	-42.67	0.00	578.93	0.572	0.000	23.55	0.00	0.0000	0.0000	0.0000	0.00
108	SEABED	-484.14	-42.67	0.00	584.98	0.572	0.000	23.55	0.00	0.0000	0.0000	0.0000	0.00
109	SEABED	-490.19	-42.67	0.00	591.03	0.572	0.000	23.55	0.00	0.0000	0.0000	0.0000	0.00
110	SEABED	-496.24	-42.67	0.00	597.08	0.572	0.000	23.55	0.00	0.0000	0.0000	0.0000	0.00
111	SEABED	-502.29	-42.67	0.00	603.13	0.572	0.000	23.55	0.00	0.0000	0.0000	0.0000	0.00
112	SEABED	-508.34	-42.67	0.00	609.18	0.572	0.000	23.55	0.00	0.0000	0.0000	0.0000	0.00
113	SEABED	-514.39	-42.67	0.00	615.23	0.572	0.000	23.55	0.00	0.0000	0.0000	0.0000	0.00
114	SEABED	-520.44	-42.67	0.00	621.28	0.572	0.000	23.55	0.00	0.0000	0.0000	0.0000	0.00
115	SEABED	-526.49	-42.67	0.00	627.33	0.572	0.000	23.55	0.00	0.0000	0.0000	0.0000	0.00
116	SEABED	-532.54	-42.67	0.00	633.38	0.572	0.000	23.55	0.00	0.0000	0.0000	0.0000	0.00
117	SEABED	-538.59	-42.67	0.00	639.43	0.572	0.000	23.55	0.00	0.0000	0.0000	0.0000	0.00
118	SEABED	-544.64	-42.67	0.00	645.48	0.572	0.000	23.55	0.00	0.0000	0.0000	0.0000	0.00
119	SEABED	-550.69	-42.67	0.00	651.53	0.572	0.000	23.55	0.00	0.0000	0.0000	0.0000	0.00
120	SEABED	-556.74	-42.67	0.00	657.58	0.572	0.000	23.55	0.00	0.0000	0.0000	0.0000	0.00
121	SEABED	-562.79	-42.67	0.00	663.63	0.572	0.000	23.55	0.00	0.0000	0.0000	0.0000	0.00
122	SEABED	-568.84	-42.67	0.00	669.68	0.572	0.000	23.55	0.00	0.0000	0.0000	0.0000	0.00
123	SEABED	-574.89	-42.67	0.00	675.73	0.572	0.000	23.55	0.00	0.0000	0.0000	0.0000	0.00
124	SEABED	-580.94	-42.67	0.00	681.78	0.572	0.000	23.55	0.00	0.0000	0.0000	0.0000	0.00
125	SEABED	-586.99	-42.67	0.00	687.83	0.572	0.000	23.55	0.00	0.0000	0.0000	0.0000	0.00
126	SEABED	-593.04	-42.67	0.00	693.88	0.432	0.000	23.55	0.00	0.0000	0.0000	0.0000	0.00
127	SEABED	-596.14	-42.67	-0.01	696.99	0.273	0.000	23.55	0.00	0.0000	0.0000	0.0000	0.00
128	SEABED	-599.25	-42.67	-0.19	700.09	0.000	0.000	23.55	0.00	0.0000	0.0000	0.0000	0.00

S T A T I C P I P E C O O R D I N A T E S, F O R C E S A N D S T R A I N S

NODE NO.	PIPE SECTION	X COORD (M)	Y COORD (M)	VERT ANGLE (DEG)	PIPE LENGTH (M)	SUPPORT REACTION (KN)	SEPARA -TION (M)	AXIAL TENSION (KN)	BENDING MOMENT (KN-M)	TENSILE STRAIN (PCT)	BENDING STRAIN (PCT)	TOTAL STRAIN (PCT)	PERCNT ALLOW (PCT)
1	LAYBARGE	96.31	6.41	1.93	0.00	9.926	0.000	0.00	2.74	0.0000	0.0021	0.0021	0.00
3	LAYBARGE	84.28	6.05	1.58	12.04	24.183	0.000	-0.73	-19.26	0.0000	-0.0144	0.0144	0.00
5	LAYBARGE	73.45	5.73	1.90	22.87	24.270	0.000	-1.39	-29.20	-0.0001	-0.0218	0.0219	0.00
7	TENSIONR	60.10	5.24	2.31	36.23	32.208	0.000	34.62	-24.10	0.0016	-0.0180	0.0196	0.00
9	LAYBARGE	51.10	4.87	2.19	45.24	0.000	0.000	33.88	31.36	0.0016	0.0235	0.0250	0.00
10	LAYBARGE	46.45	4.70	1.91	49.89	10.478	0.000	33.57	12.49	0.0016	0.0093	0.0109	0.00
12	LAYBARGE	35.36	4.31	2.61	60.99	28.377	0.000	32.57	-80.04	0.0015	-0.0599	0.0614	0.00
14	LAYBARGE	25.34	3.64	5.25	71.03	37.781	0.000	31.01	-129.28	0.0014	-0.0967	0.0981	0.00
16	LAYBARGE	19.31	3.01	6.53	77.09	0.000	0.000	30.14	-38.82	0.0014	-0.0290	0.0304	0.00
17	LAYBARGE	8.88	1.76	7.12	87.60	35.612	0.000	27.63	-32.11	0.0013	-0.0240	0.0253	0.00
19	LAYBARGE	4.88	1.25	7.10	91.63	0.000	0.000	26.61	41.40	0.0012	0.0310	0.0322	0.00
20	LAYBARGE	3.06	1.03	6.84	93.46	0.000	0.412	26.10	68.61	0.0012	0.0513	0.0525	0.00
24	STINGER	-7.50	0.01	4.04	104.08	0.000	0.466	23.93	101.78	0.0011	0.0761	0.0772	0.00
26	STINGER	-16.61	-0.49	2.69	113.20	17.273	0.000	23.64	0.00	0.0011	0.0000	0.0011	0.00
29	STINGER	-26.51	-1.65	9.26	123.17	2.169	0.000	23.68	0.00	0.0000	0.0000	0.0000	0.00
31	STINGER	-37.20	-3.90	11.83	134.10	0.000	0.190	23.69	0.00	0.0000	0.0000	0.0000	0.00
33	STINGER	-40.13	-4.51	11.80	137.09	0.000	0.695	23.69	0.00	0.0000	0.0000	0.0000	0.00
35	SAGBEND	-46.26	-5.79	11.76	143.35	0.000	0.000	23.69	0.00	0.0000	0.0000	0.0000	0.00
36	SAGBEND	-52.19	-7.02	11.73	149.40	0.000	0.000	23.69	0.00	0.0000	0.0000	0.0000	0.00
37	SAGBEND	-58.11	-8.25	11.69	155.45	0.000	0.000	23.68	0.00	0.0000	0.0000	0.0000	0.00
38	SAGBEND	-64.04	-9.47	11.65	161.50	0.000	0.000	23.68	0.00	0.0000	0.0000	0.0000	0.00
39	SAGBEND	-69.96	-10.69	11.61	167.55	0.000	0.000	23.68	0.00	0.0000	0.0000	0.0000	0.00
40	SAGBEND	-75.89	-11.91	11.58	173.60	0.000	0.000	23.67	0.00	0.0000	0.0000	0.0000	0.00
41	SAGBEND	-81.82	-13.12	11.54	179.65	0.000	0.000	23.67	0.00	0.0000	0.0000	0.0000	0.00
42	SAGBEND	-87.74	-14.33	11.50	185.70	0.000	0.000	23.67	0.00	0.0000	0.0000	0.0000	0.00
43	SAGBEND	-93.67	-15.53	11.46	191.75	0.000	0.000	23.66	0.00	0.0000	0.0000	0.0000	0.00
44	SAGBEND	-99.60	-16.73	11.43	197.80	0.000	0.000	23.66	0.00	0.0000	0.0000	0.0000	0.00
45	SAGBEND	-105.53	-17.93	11.39	203.85	0.000	0.000	23.66	0.00	0.0000	0.0000	0.0000	0.00
46	SAGBEND	-111.46	-19.12	11.35	209.90	0.000	0.000	23.65	0.00	0.0000	0.0000	0.0000	0.00
47	SAGBEND	-117.40	-20.31	11.31	215.95	0.000	0.000	23.65	0.00	0.0000	0.0000	0.0000	0.00
48	SAGBEND	-123.33	-21.49	11.28	222.00	0.000	0.000	23.65	0.00	0.0000	0.0000	0.0000	0.00
49	SAGBEND	-129.26	-22.68	11.24	228.05	0.000	0.000	23.64	0.00	0.0000	0.0000	0.0000	0.00
50	SAGBEND	-135.20	-23.85	11.20	234.10	0.000	0.000	23.64	0.00	0.0000	0.0000	0.0000	0.00
51	SAGBEND	-141.13	-25.03	11.16	240.15	0.000	0.000	23.64	0.00	0.0000	0.0000	0.0000	0.00
52	SAGBEND	-147.07	-26.20	11.13	246.20	0.000	0.000	23.64	0.00	0.0000	0.0000	0.0000	0.00
53	SAGBEND	-153.00	-27.36	11.09	252.25	0.000	0.000	23.63	0.00	0.0000	0.0000	0.0000	0.00
54	SAGBEND	-158.94	-28.52	11.05	258.30	0.000	0.000	23.63	0.00	0.0000	0.0000	0.0000	0.00
55	SAGBEND	-164.88	-29.68	11.01	264.35	0.000	0.000	23.63	0.00	0.0000	0.0000	0.0000	0.00
56	SAGBEND	-170.82	-30.83	10.98	270.40	0.000	0.000	23.62	0.00	0.0000	0.0000	0.0000	0.00
57	SAGBEND	-176.76	-31.98	10.94	276.45	0.000	0.000	23.62	0.00	0.0000	0.0000	0.0000	0.00
58	SAGBEND	-182.70	-33.13	10.90	282.50	0.000	0.000	23.62	0.00	0.0000	0.0000	0.0000	0.00
59	SAGBEND	-188.64	-34.27	10.86	288.55	0.000	0.000	23.61	0.00	0.0000	0.0000	0.0000	0.00
60	SAGBEND	-194.58	-35.41	10.82	294.60	0.000	0.000	23.61	0.00	0.0000	0.0000	0.0000	0.00

S T A T I C P I P E C O O R D I N A T E S, F O R C E S A N D S T R A I N S

NODE NO.	PIPE SECTION	X COORD (M)	Y COORD (M)	VERT ANGLE (DEG)	PIPE LENGTH (M)	SUPPORT REACTION (KN)	SEPARA -TION (M)	AXIAL TENSION (KN)	BENDING MOMENT (KN-M)	TENSILE STRAIN (PCT)	BENDING STRAIN (PCT)	TOTAL STRAIN (PCT)	PERCNT ALLOW (PCT)
61	SAGBEND	-200.53	-36.54	10.79	300.65	0.000	0.000	23.61	0.00	0.0000	0.0000	0.0000	0.00
62	SAGBEND	-206.47	-37.67	10.75	306.70	0.000	0.000	23.61	0.00	0.0000	0.0000	0.0000	0.00
63	SAGBEND	-209.82	-38.31	10.73	310.11	0.000	0.000	23.60	0.00	0.0000	0.0000	0.0000	0.00
64	SAGBEND	-214.09	-39.08	9.75	314.46	0.000	0.000	23.53	0.00	0.0000	0.0000	0.0000	0.00
65	SAGBEND	-218.38	-39.78	8.76	318.80	0.000	0.000	23.46	0.00	0.0000	0.0000	0.0000	0.00
66	SAGBEND	-224.37	-40.63	7.37	324.85	0.000	0.000	23.38	0.00	0.0000	0.0000	0.0000	0.00
67	SAGBEND	-230.38	-41.33	5.98	330.90	0.000	0.000	23.32	0.00	0.0000	0.0000	0.0000	0.00
68	SAGBEND	-236.41	-41.89	4.57	336.95	0.000	0.000	23.27	0.00	0.0000	0.0000	0.0000	0.00
69	SAGBEND	-242.44	-42.30	3.17	343.00	0.000	0.000	23.23	0.00	0.0000	0.0000	0.0000	0.00
70	SAGBEND	-248.49	-42.56	1.75	349.05	0.000	0.000	23.20	0.00	0.0000	0.0000	0.0000	0.00
71	SAGBEND	-254.54	-42.67	0.30	355.10	0.164	0.000	23.19	0.01	0.0000	0.0000	0.0000	0.00
72	SEABED	-260.59	-42.67	0.02	361.15	0.556	0.000	23.19	0.01	0.0000	0.0000	0.0000	0.00
73	SEABED	-266.64	-42.67	0.01	367.20	0.572	0.000	23.19	0.00	0.0000	0.0000	0.0000	0.00
74	SEABED	-272.69	-42.67	0.00	373.25	0.572	0.000	23.19	0.00	0.0000	0.0000	0.0000	0.00
75	SEABED	-278.74	-42.67	0.00	379.30	0.572	0.000	23.19	0.00	0.0000	0.0000	0.0000	0.00
76	SEABED	-284.79	-42.67	0.00	385.35	0.572	0.000	23.19	0.00	0.0000	0.0000	0.0000	0.00
77	SEABED	-290.84	-42.67	0.00	391.40	0.572	0.000	23.19	0.00	0.0000	0.0000	0.0000	0.00
78	SEABED	-296.89	-42.67	0.00	397.45	0.572	0.000	23.19	0.00	0.0000	0.0000	0.0000	0.00
79	SEABED	-302.94	-42.67	0.00	403.50	0.572	0.000	23.19	0.00	0.0000	0.0000	0.0000	0.00
80	SEABED	-308.99	-42.67	0.00	409.55	0.572	0.000	23.19	0.00	0.0000	0.0000	0.0000	0.00
81	SEABED	-315.04	-42.67	0.00	415.60	0.572	0.000	23.19	0.00	0.0000	0.0000	0.0000	0.00
82	SEABED	-321.09	-42.67	0.00	421.65	0.572	0.000	23.19	0.00	0.0000	0.0000	0.0000	0.00
83	SEABED	-327.14	-42.67	0.00	427.70	0.572	0.000	23.19	0.00	0.0000	0.0000	0.0000	0.00
84	SEABED	-333.19	-42.67	0.00	433.75	0.572	0.000	23.19	0.00	0.0000	0.0000	0.0000	0.00
85	SEABED	-339.24	-42.67	0.00	439.80	0.572	0.000	23.19	0.00	0.0000	0.0000	0.0000	0.00
86	SEABED	-345.29	-42.67	0.00	445.85	0.572	0.000	23.19	0.00	0.0000	0.0000	0.0000	0.00
87	SEABED	-351.34	-42.67	0.00	451.90	0.572	0.000	23.19	0.00	0.0000	0.0000	0.0000	0.00
88	SEABED	-357.39	-42.67	0.00	457.95	0.572	0.000	23.19	0.00	0.0000	0.0000	0.0000	0.00
89	SEABED	-363.44	-42.67	0.00	464.00	0.572	0.000	23.19	0.00	0.0000	0.0000	0.0000	0.00
90	SEABED	-369.49	-42.67	0.00	470.05	0.572	0.000	23.19	0.00	0.0000	0.0000	0.0000	0.00
91	SEABED	-375.54	-42.67	0.00	476.10	0.572	0.000	23.19	0.00	0.0000	0.0000	0.0000	0.00
92	SEABED	-381.59	-42.67	0.00	482.15	0.572	0.000	23.19	0.00	0.0000	0.0000	0.0000	0.00
93	SEABED	-387.64	-42.67	0.00	488.20	0.572	0.000	23.19	0.00	0.0000	0.0000	0.0000	0.00
94	SEABED	-393.69	-42.67	0.00	494.25	0.572	0.000	23.19	0.00	0.0000	0.0000	0.0000	0.00
95	SEABED	-399.74	-42.67	0.00	500.30	0.572	0.000	23.19	0.00	0.0000	0.0000	0.0000	0.00
96	SEABED	-405.79	-42.67	0.00	506.36	0.572	0.000	23.19	0.00	0.0000	0.0000	0.0000	0.00
97	SEABED	-411.84	-42.67	0.00	512.41	0.572	0.000	23.19	0.00	0.0000	0.0000	0.0000	0.00
98	SEABED	-417.89	-42.67	0.00	518.46	0.572	0.000	23.19	0.00	0.0000	0.0000	0.0000	0.00
99	SEABED	-423.94	-42.67	0.00	524.51	0.572	0.000	23.19	0.00	0.0000	0.0000	0.0000	0.00
100	SEABED	-429.99	-42.67	0.00	530.56	0.572	0.000	23.19	0.00	0.0000	0.0000	0.0000	0.00
101	SEABED	-436.04	-42.67	0.00	536.61	0.572	0.000	23.19	0.00	0.0000	0.0000	0.0000	0.00
102	SEABED	-442.09	-42.67	0.00	542.66	0.572	0.000	23.19	0.00	0.0000	0.0000	0.0000	0.00
103	SEABED	-448.14	-42.67	0.00	548.71	0.572	0.000	23.19	0.00	0.0000	0.0000	0.0000	0.00
104	SEABED	-454.19	-42.67	0.00	554.76	0.572	0.000	23.19	0.00	0.0000	0.0000	0.0000	0.00

S T A T I C P I P E C O O R D I N A T E S, F O R C E S A N D S T R A I N S

NODE NO.	PIPE SECTION	X COORD (M)	Y COORD (M)	VERT ANGLE (DEG)	PIPE LENGTH (M)	SUPPORT REACTION (KN)	SEPARA -TION (M)	AXIAL TENSION (KN)	BENDING MOMENT (KN-M)	TENSILE STRAIN (PCT)	BENDING STRAIN (PCT)	TOTAL STRAIN (PCT)	PERCNT ALLOW (PCT)
105	SEABED	-460.24	-42.67	0.00	560.81	0.572	0.000	23.19	0.00	0.0000	0.0000	0.0000	0.00
106	SEABED	-466.29	-42.67	0.00	566.86	0.572	0.000	23.19	0.00	0.0000	0.0000	0.0000	0.00
107	SEABED	-472.34	-42.67	0.00	572.91	0.572	0.000	23.19	0.00	0.0000	0.0000	0.0000	0.00
108	SEABED	-478.39	-42.67	0.00	578.96	0.572	0.000	23.19	0.00	0.0000	0.0000	0.0000	0.00
109	SEABED	-484.44	-42.67	0.00	585.01	0.572	0.000	23.19	0.00	0.0000	0.0000	0.0000	0.00
110	SEABED	-490.49	-42.67	0.00	591.06	0.572	0.000	23.19	0.00	0.0000	0.0000	0.0000	0.00
111	SEABED	-496.54	-42.67	0.00	597.11	0.572	0.000	23.19	0.00	0.0000	0.0000	0.0000	0.00
112	SEABED	-502.59	-42.67	0.00	603.16	0.572	0.000	23.19	0.00	0.0000	0.0000	0.0000	0.00
113	SEABED	-508.64	-42.67	0.00	609.21	0.572	0.000	23.19	0.00	0.0000	0.0000	0.0000	0.00
114	SEABED	-514.69	-42.67	0.00	615.26	0.572	0.000	23.19	0.00	0.0000	0.0000	0.0000	0.00
115	SEABED	-520.74	-42.67	0.00	621.31	0.572	0.000	23.19	0.00	0.0000	0.0000	0.0000	0.00
116	SEABED	-526.79	-42.67	0.00	627.36	0.572	0.000	23.19	0.00	0.0000	0.0000	0.0000	0.00
117	SEABED	-532.84	-42.67	0.00	633.41	0.572	0.000	23.19	0.00	0.0000	0.0000	0.0000	0.00
118	SEABED	-538.89	-42.67	0.00	639.46	0.572	0.000	23.19	0.00	0.0000	0.0000	0.0000	0.00
119	SEABED	-544.94	-42.67	0.00	645.51	0.572	0.000	23.19	0.00	0.0000	0.0000	0.0000	0.00
120	SEABED	-550.99	-42.67	0.00	651.56	0.572	0.000	23.19	0.00	0.0000	0.0000	0.0000	0.00
121	SEABED	-557.04	-42.67	0.00	657.61	0.572	0.000	23.19	0.00	0.0000	0.0000	0.0000	0.00
122	SEABED	-563.09	-42.67	0.00	663.66	0.572	0.000	23.19	0.00	0.0000	0.0000	0.0000	0.00
123	SEABED	-569.14	-42.67	0.00	669.71	0.572	0.000	23.19	0.00	0.0000	0.0000	0.0000	0.00
124	SEABED	-575.19	-42.67	0.00	675.76	0.572	0.000	23.19	0.00	0.0000	0.0000	0.0000	0.00
125	SEABED	-581.24	-42.67	0.00	681.81	0.572	0.000	23.19	0.00	0.0000	0.0000	0.0000	0.00
126	SEABED	-587.29	-42.67	0.00	687.86	0.572	0.000	23.19	0.00	0.0000	0.0000	0.0000	0.00
127	SEABED	-593.34	-42.67	0.00	693.91	0.572	0.000	23.19	0.00	0.0000	0.0000	0.0000	0.00
128	SEABED	-599.39	-42.67	0.00	699.96	0.572	0.000	23.19	0.00	0.0000	0.0000	0.0000	0.00
129	SEABED	-605.44	-42.67	-0.01	706.01	0.466	0.000	23.19	0.00	0.0000	0.0000	0.0000	0.00
130	SEABED	-609.55	-42.67	-0.18	710.11	0.000	0.000	23.19	0.00	0.0000	0.0000	0.0000	0.00

S T A T I C P I P E C O O R D I N A T E S, F O R C E S A N D S T R A I N S

NODE NO.	PIPE SECTION	X COORD (M)	Y COORD (M)	VERT ANGLE (DEG)	PIPE LENGTH (M)	SUPPORT REACTION (KN)	SEPARA -TION (M)	AXIAL TENSION (KN)	BENDING MOMENT (KN-M)	TENSILE STRAIN (PCT)	BENDING STRAIN (PCT)	TOTAL STRAIN (PCT)	PERCNT ALLOW (PCT)
1	LAYBARGE	96.31	6.41	1.93	0.00	9.927	0.000	0.00	2.74	0.0000	0.0021	0.0021	0.00
3	LAYBARGE	84.28	6.05	1.58	12.04	24.182	0.000	-0.73	-19.26	0.0000	-0.0144	0.0144	0.00
5	LAYBARGE	73.45	5.73	1.90	22.87	24.274	0.000	-1.39	-29.21	-0.0001	-0.0218	0.0219	0.00
7	TENSIONR	60.10	5.24	2.31	36.23	32.214	0.000	48.22	-24.06	0.0022	-0.0180	0.0202	0.00
9	LAYBARGE	51.10	4.87	2.19	45.24	0.000	0.000	47.48	31.28	0.0022	0.0234	0.0256	0.00
10	LAYBARGE	46.45	4.70	1.91	49.89	10.274	0.000	47.17	12.71	0.0022	0.0095	0.0117	0.00
12	LAYBARGE	35.36	4.31	2.62	60.99	29.236	0.000	46.17	-80.45	0.0021	-0.0602	0.0623	0.00
14	LAYBARGE	25.34	3.64	5.23	71.03	37.479	0.000	44.62	-127.38	0.0021	-0.0953	0.0974	0.00
16	LAYBARGE	19.31	3.01	6.51	77.09	0.000	0.000	43.74	-39.85	0.0020	-0.0298	0.0318	0.00
17	LAYBARGE	8.88	1.76	7.22	87.60	36.064	0.000	41.21	-40.56	0.0019	-0.0303	0.0323	0.00
19	LAYBARGE	4.88	1.24	7.29	91.63	0.000	0.000	40.21	31.04	0.0019	0.0232	0.0251	0.00
20	LAYBARGE	3.05	1.01	7.08	93.48	0.000	0.395	39.69	57.67	0.0018	0.0431	0.0450	0.00
24	STINGER	-7.53	-0.08	4.58	104.12	0.000	0.447	37.46	92.36	0.0017	0.0691	0.0708	0.00
26	STINGER	-16.64	-0.68	3.35	113.25	17.051	0.000	37.05	0.00	0.0017	0.0000	0.0017	0.00
29	STINGER	-26.50	-1.97	9.21	123.19	2.313	0.000	37.13	0.00	0.0000	0.0000	0.0000	0.00
31	STINGER	-37.23	-4.05	10.95	134.12	0.000	0.506	37.14	0.00	0.0000	0.0000	0.0000	0.00
33	STINGER	-40.17	-4.62	10.93	137.11	0.000	1.097	37.14	0.00	0.0000	0.0000	0.0000	0.00
35	SAGBEND	-46.29	-5.80	10.91	143.35	0.000	0.000	37.13	0.00	0.0000	0.0000	0.0000	0.00
36	SAGBEND	-52.23	-6.95	10.89	149.40	0.000	0.000	37.13	0.00	0.0000	0.0000	0.0000	0.00
37	SAGBEND	-58.18	-8.09	10.86	155.45	0.000	0.000	37.13	0.00	0.0000	0.0000	0.0000	0.00
38	SAGBEND	-64.12	-9.23	10.84	161.50	0.000	0.000	37.13	0.00	0.0000	0.0000	0.0000	0.00
39	SAGBEND	-70.06	-10.36	10.81	167.55	0.000	0.000	37.12	0.00	0.0000	0.0000	0.0000	0.00
40	SAGBEND	-76.00	-11.50	10.79	173.60	0.000	0.000	37.12	0.00	0.0000	0.0000	0.0000	0.00
41	SAGBEND	-81.95	-12.63	10.77	179.65	0.000	0.000	37.12	0.00	0.0000	0.0000	0.0000	0.00
42	SAGBEND	-87.89	-13.76	10.74	185.70	0.000	0.000	37.11	0.00	0.0000	0.0000	0.0000	0.00
43	SAGBEND	-93.83	-14.88	10.72	191.75	0.000	0.000	37.11	0.00	0.0000	0.0000	0.0000	0.00
44	SAGBEND	-99.78	-16.01	10.69	197.80	0.000	0.000	37.11	0.00	0.0000	0.0000	0.0000	0.00
45	SAGBEND	-105.72	-17.13	10.67	203.85	0.000	0.000	37.11	0.00	0.0000	0.0000	0.0000	0.00
46	SAGBEND	-111.67	-18.25	10.65	209.90	0.000	0.000	37.10	0.00	0.0000	0.0000	0.0000	0.00
47	SAGBEND	-117.62	-19.36	10.62	215.95	0.000	0.000	37.10	0.00	0.0000	0.0000	0.0000	0.00
48	SAGBEND	-123.56	-20.48	10.60	222.00	0.000	0.000	37.10	0.00	0.0000	0.0000	0.0000	0.00
49	SAGBEND	-129.51	-21.59	10.57	228.05	0.000	0.000	37.09	0.00	0.0000	0.0000	0.0000	0.00
50	SAGBEND	-135.46	-22.70	10.55	234.10	0.000	0.000	37.09	0.00	0.0000	0.0000	0.0000	0.00
51	SAGBEND	-141.40	-23.81	10.53	240.15	0.000	0.000	37.09	0.00	0.0000	0.0000	0.0000	0.00
52	SAGBEND	-147.35	-24.91	10.50	246.20	0.000	0.000	37.08	0.00	0.0000	0.0000	0.0000	0.00
53	SAGBEND	-153.30	-26.01	10.48	252.25	0.000	0.000	37.08	0.00	0.0000	0.0000	0.0000	0.00
54	SAGBEND	-159.25	-27.11	10.45	258.30	0.000	0.000	37.08	0.00	0.0000	0.0000	0.0000	0.00
55	SAGBEND	-165.20	-28.21	10.43	264.35	0.000	0.000	37.08	0.00	0.0000	0.0000	0.0000	0.00
56	SAGBEND	-171.15	-29.30	10.41	270.40	0.000	0.000	37.07	0.00	0.0000	0.0000	0.0000	0.00
57	SAGBEND	-177.10	-30.39	10.38	276.45	0.000	0.000	37.07	0.00	0.0000	0.0000	0.0000	0.00
58	SAGBEND	-183.05	-31.48	10.36	282.50	0.000	0.000	37.07	0.00	0.0000	0.0000	0.0000	0.00
59	SAGBEND	-189.00	-32.57	10.33	288.55	0.000	0.000	37.06	0.00	0.0000	0.0000	0.0000	0.00
60	SAGBEND	-194.96	-33.65	10.31	294.60	0.000	0.000	37.06	0.00	0.0000	0.0000	0.0000	0.00

S T A T I C P I P E C O O R D I N A T E S, F O R C E S A N D S T R A I N S

NODE NO.	PIPE SECTION	X COORD (M)	Y COORD (M)	VERT ANGLE (DEG)	PIPE LENGTH (M)	SUPPORT REACTION (KN)	SEPARA -TION (M)	AXIAL TENSION (KN)	BENDING MOMENT (KN-M)	TENSILE STRAIN (PCT)	BENDING STRAIN (PCT)	TOTAL STRAIN (PCT)	PERCNT ALLOW (PCT)
61	SAGBEND	-200.91	-34.73	10.29	300.65	0.000	0.000	37.06	0.00	0.0000	0.0000	0.0000	0.00
62	SAGBEND	-206.86	-35.81	10.26	306.70	0.000	0.000	37.06	0.00	0.0000	0.0000	0.0000	0.00
63	SAGBEND	-210.22	-36.42	10.25	310.11	0.000	0.000	37.05	0.00	0.0000	0.0000	0.0000	0.00
64	SAGBEND	-214.50	-37.17	9.62	314.46	0.000	0.000	36.98	0.00	0.0000	0.0000	0.0000	0.00
65	SAGBEND	-218.78	-37.87	8.99	318.80	0.000	0.000	36.92	0.00	0.0000	0.0000	0.0000	0.00
66	SAGBEND	-224.77	-38.77	8.11	324.85	0.000	0.000	36.83	0.00	0.0000	0.0000	0.0000	0.00

67	SAGBEND	-230.76	-39.58	7.23	330.90	0.000	0.000	36.76	0.00	0.0000	0.0000	0.0000	0.00
68	SAGBEND	-236.77	-40.30	6.35	336.95	0.000	0.000	36.69	0.00	0.0000	0.0000	0.0000	0.00
69	SAGBEND	-242.79	-40.92	5.46	343.00	0.000	0.000	36.63	0.00	0.0000	0.0000	0.0000	0.00
70	SAGBEND	-248.82	-41.45	4.56	349.05	0.000	0.000	36.58	0.00	0.0000	0.0000	0.0000	0.00
71	SAGBEND	-254.85	-41.88	3.67	355.10	0.000	0.000	36.54	0.00	0.0000	0.0000	0.0000	0.00
72	SAGBEND	-260.89	-42.22	2.77	361.15	0.000	0.000	36.51	0.00	0.0000	0.0000	0.0000	0.00
73	SAGBEND	-266.94	-42.47	1.87	367.20	0.000	0.000	36.48	0.00	0.0000	0.0000	0.0000	0.00
74	SAGBEND	-272.98	-42.62	0.98	373.25	0.000	0.000	36.47	0.00	0.0000	0.0000	0.0000	0.00
75	SEABED	-279.03	-42.67	0.08	379.30	0.245	0.000	36.46	0.00	0.0000	0.0000	0.0000	0.00
76	SEABED	-285.08	-42.67	0.01	385.35	0.564	0.000	36.46	0.00	0.0000	0.0000	0.0000	0.00
77	SEABED	-291.13	-42.67	0.00	391.40	0.572	0.000	36.46	0.00	0.0000	0.0000	0.0000	0.00
78	SEABED	-297.18	-42.67	0.00	397.45	0.572	0.000	36.46	0.00	0.0000	0.0000	0.0000	0.00
79	SEABED	-303.23	-42.67	0.00	403.50	0.572	0.000	36.46	0.00	0.0000	0.0000	0.0000	0.00
80	SEABED	-309.28	-42.67	0.00	409.55	0.572	0.000	36.46	0.00	0.0000	0.0000	0.0000	0.00
81	SEABED	-315.33	-42.67	0.00	415.60	0.572	0.000	36.46	0.00	0.0000	0.0000	0.0000	0.00
82	SEABED	-321.38	-42.67	0.00	421.65	0.572	0.000	36.46	0.00	0.0000	0.0000	0.0000	0.00
83	SEABED	-327.43	-42.67	0.00	427.70	0.572	0.000	36.46	0.00	0.0000	0.0000	0.0000	0.00
84	SEABED	-333.48	-42.67	0.00	433.75	0.572	0.000	36.46	0.00	0.0000	0.0000	0.0000	0.00
85	SEABED	-339.53	-42.67	0.00	439.80	0.572	0.000	36.46	0.00	0.0000	0.0000	0.0000	0.00
86	SEABED	-345.58	-42.67	0.00	445.85	0.572	0.000	36.46	0.00	0.0000	0.0000	0.0000	0.00
87	SEABED	-351.63	-42.67	0.00	451.90	0.572	0.000	36.46	0.00	0.0000	0.0000	0.0000	0.00
88	SEABED	-357.68	-42.67	0.00	457.95	0.572	0.000	36.46	0.00	0.0000	0.0000	0.0000	0.00
89	SEABED	-363.73	-42.67	0.00	464.00	0.572	0.000	36.46	0.00	0.0000	0.0000	0.0000	0.00
90	SEABED	-369.78	-42.67	0.00	470.05	0.572	0.000	36.46	0.00	0.0000	0.0000	0.0000	0.00
91	SEABED	-375.83	-42.67	0.00	476.10	0.572	0.000	36.46	0.00	0.0000	0.0000	0.0000	0.00
92	SEABED	-381.88	-42.67	0.00	482.15	0.572	0.000	36.46	0.00	0.0000	0.0000	0.0000	0.00
93	SEABED	-387.93	-42.67	0.00	488.20	0.572	0.000	36.46	0.00	0.0000	0.0000	0.0000	0.00
94	SEABED	-393.98	-42.67	0.00	494.25	0.572	0.000	36.46	0.00	0.0000	0.0000	0.0000	0.00
95	SEABED	-400.03	-42.67	0.00	500.30	0.572	0.000	36.46	0.00	0.0000	0.0000	0.0000	0.00
96	SEABED	-406.08	-42.67	0.00	506.35	0.572	0.000	36.46	0.00	0.0000	0.0000	0.0000	0.00
97	SEABED	-412.13	-42.67	0.00	512.40	0.572	0.000	36.46	0.00	0.0000	0.0000	0.0000	0.00
98	SEABED	-418.18	-42.67	0.00	518.45	0.572	0.000	36.46	0.00	0.0000	0.0000	0.0000	0.00
99	SEABED	-424.23	-42.67	0.00	524.50	0.572	0.000	36.46	0.00	0.0000	0.0000	0.0000	0.00
100	SEABED	-430.28	-42.67	0.00	530.55	0.572	0.000	36.46	0.00	0.0000	0.0000	0.0000	0.00
101	SEABED	-436.33	-42.67	0.00	536.60	0.572	0.000	36.46	0.00	0.0000	0.0000	0.0000	0.00
102	SEABED	-442.38	-42.67	0.00	542.65	0.572	0.000	36.46	0.00	0.0000	0.0000	0.0000	0.00
103	SEABED	-448.43	-42.67	0.00	548.70	0.572	0.000	36.46	0.00	0.0000	0.0000	0.0000	0.00
104	SEABED	-454.48	-42.67	0.00	554.75	0.572	0.000	36.46	0.00	0.0000	0.0000	0.0000	0.00

S T A T I C P I P E C O O R D I N A T E S, F O R C E S A N D S T R A I N S

NODE NO.	PIPE SECTION	X COORD (M)	Y COORD (M)	VERT ANGLE (DEG)	PIPE LENGTH (M)	SUPPORT REACTION (KN)	SEPARA -TION (M)	AXIAL TENSION (KN)	BENDING MOMENT (KN-M)	TENSILE STRAIN (PCT)	BENDING STRAIN (PCT)	TOTAL STRAIN (PCT)	PERCNT ALLOW (PCT)
105	SEABED	-460.53	-42.67	0.00	560.80	0.572	0.000	36.46	0.00	0.0000	0.0000	0.0000	0.00
106	SEABED	-466.58	-42.67	0.00	566.85	0.572	0.000	36.46	0.00	0.0000	0.0000	0.0000	0.00
107	SEABED	-472.63	-42.67	0.00	572.90	0.572	0.000	36.46	0.00	0.0000	0.0000	0.0000	0.00
108	SEABED	-478.68	-42.67	0.00	578.95	0.572	0.000	36.46	0.00	0.0000	0.0000	0.0000	0.00
109	SEABED	-484.73	-42.67	0.00	585.00	0.572	0.000	36.46	0.00	0.0000	0.0000	0.0000	0.00
110	SEABED	-490.78	-42.67	0.00	591.05	0.572	0.000	36.46	0.00	0.0000	0.0000	0.0000	0.00
111	SEABED	-496.83	-42.67	0.00	597.10	0.572	0.000	36.46	0.00	0.0000	0.0000	0.0000	0.00
112	SEABED	-502.88	-42.67	0.00	603.15	0.572	0.000	36.46	0.00	0.0000	0.0000	0.0000	0.00
113	SEABED	-508.93	-42.67	0.00	609.20	0.572	0.000	36.46	0.00	0.0000	0.0000	0.0000	0.00
114	SEABED	-514.98	-42.67	0.00	615.25	0.572	0.000	36.46	0.00	0.0000	0.0000	0.0000	0.00
115	SEABED	-521.03	-42.67	0.00	621.30	0.572	0.000	36.46	0.00	0.0000	0.0000	0.0000	0.00
116	SEABED	-527.08	-42.67	0.00	627.35	0.572	0.000	36.46	0.00	0.0000	0.0000	0.0000	0.00
117	SEABED	-533.13	-42.67	0.00	633.40	0.572	0.000	36.46	0.00	0.0000	0.0000	0.0000	0.00
118	SEABED	-539.18	-42.67	0.00	639.45	0.572	0.000	36.46	0.00	0.0000	0.0000	0.0000	0.00
119	SEABED	-545.23	-42.67	0.00	645.50	0.572	0.000	36.46	0.00	0.0000	0.0000	0.0000	0.00
120	SEABED	-551.28	-42.67	0.00	651.55	0.572	0.000	36.46	0.00	0.0000	0.0000	0.0000	0.00
121	SEABED	-557.33	-42.67	0.00	657.60	0.572	0.000	36.46	0.00	0.0000	0.0000	0.0000	0.00
122	SEABED	-563.38	-42.67	0.00	663.65	0.572	0.000	36.46	0.00	0.0000	0.0000	0.0000	0.00
123	SEABED	-569.43	-42.67	0.00	669.70	0.572	0.000	36.46	0.00	0.0000	0.0000	0.0000	0.00
124	SEABED	-575.48	-42.67	0.00	675.75	0.572	0.000	36.46	0.00	0.0000	0.0000	0.0000	0.00
125	SEABED	-581.53	-42.67	0.00	681.80	0.572	0.000	36.46	0.00	0.0000	0.0000	0.0000	0.00
126	SEABED	-587.58	-42.67	0.00	687.85	0.572	0.000	36.46	0.00	0.0000	0.0000	0.0000	0.00
127	SEABED	-593.63	-42.67	0.00	693.90	0.572	0.000	36.46	0.00	0.0000	0.0000	0.0000	0.00
128	SEABED	-599.68	-42.67	0.00	699.95	0.572	0.000	36.46	0.00	0.0000	0.0000	0.0000	0.00
129	SEABED	-605.73	-42.67	-0.01	706.00	0.456	0.000	36.46	0.00	0.0000	0.0000	0.0000	0.00
130	SEABED	-609.84	-42.67	-0.15	710.11	0.000	0.000	36.46	0.00	0.0000	0.0000	0.0000	0.00

S T A T I C P I P E C O O R D I N A T E S, F O R C E S A N D S T R A I N S

NODE NO.	PIPE SECTION	X COORD (M)	Y COORD (M)	VERT ANGLE (DEG)	PIPE LENGTH (M)	SUPPORT REACTION (KN)	SEPARA -TION (M)	AXIAL TENSION (KN)	BENDING MOMENT (KN-M)	TENSILE STRAIN (PCT)	BENDING STRAIN (PCT)	TOTAL STRAIN (PCT)	PERCNT ALLOW (PCT)
1	LAYBARGE	96.31	6.41	1.93	0.00	9.923	0.000	0.00	2.74	0.0000	0.0021	0.0021	0.00
3	LAYBARGE	84.28	6.05	1.58	12.04	24.207	0.000	-0.73	-19.29	0.0000	-0.0144	0.0145	0.00
5	LAYBARGE	73.45	5.73	1.90	22.87	24.192	0.000	-1.39	-29.04	-0.0001	-0.0217	0.0218	0.00
7	TENSIONR	60.10	5.24	2.32	36.23	32.492	0.000	48.21	-24.49	0.0022	-0.0183	0.0206	0.00
9	LAYBARGE	51.10	4.87	2.19	45.24	0.000	0.000	47.48	32.61	0.0022	0.0244	0.0266	0.00
10	LAYBARGE	46.45	4.70	1.88	49.89	8.926	0.000	47.17	14.75	0.0022	0.0110	0.0132	0.00
12	LAYBARGE	35.36	4.31	2.70	60.99	35.375	0.000	46.12	-85.96	0.0021	-0.0643	0.0664	0.00
14	LAYBARGE	25.34	3.64	4.93	71.03	22.330	0.000	44.83	-91.31	0.0021	-0.0683	0.0704	0.00
16	LAYBARGE	19.31	3.06	6.04	77.09	0.000	0.000	43.80	-58.91	0.0020	-0.0441	0.0461	0.00
17	LAYBARGE	8.88	1.76	8.70	87.60	50.228	0.000	40.56	-164.25	0.0019	-0.1235	0.1253	0.00
19	LAYBARGE	4.90	1.10	10.03	91.63	0.000	0.000	39.77	-86.32	0.0018	-0.0646	0.0664	0.00
20	LAYBARGE	3.09	0.77	10.37	93.48	0.000	0.149	39.21	-56.08	0.0018	-0.0419	0.0438	0.00
24	STINGER	-7.62	-1.24	10.51	104.37	0.000	0.138	36.49	18.76	0.0017	0.0140	0.0157	0.00
26	STINGER	-16.61	-2.89	10.43	113.51	16.938	0.000	34.84	-25.74	0.0015	-0.0192	0.0209	0.00
29	STINGER	-26.22	-4.68	10.56	123.29	1.947	0.000	33.06	0.00	0.0014	0.0000	0.0015	0.00
31	STINGER	-36.98	-6.61	10.17	134.22	0.000	0.275	33.06	0.00	0.0000	0.0000	0.0000	0.00
33	STINGER	-39.96	-7.14	10.14	137.25	0.000	0.803	33.06	0.00	0.0000	0.0000	0.0000	0.00
35	SAGBEND	-45.97	-8.22	10.12	143.35	0.000	0.000	33.06	0.00	0.0000	0.0000	0.0000	0.00
36	SAGBEND	-51.92	-9.28	10.09	149.40	0.000	0.000	33.05	0.00	0.0000	0.0000	0.0000	0.00
37	SAGBEND	-57.88	-10.33	10.06	155.45	0.000	0.000	33.05	0.00	0.0000	0.0000	0.0000	0.00
38	SAGBEND	-63.84	-11.39	10.04	161.50	0.000	0.000	33.05	0.00	0.0000	0.0000	0.0000	0.00
39	SAGBEND	-69.80	-12.44	10.01	167.55	0.000	0.000	33.05	0.00	0.0000	0.0000	0.0000	0.00
40	SAGBEND	-75.75	-13.49	9.98	173.60	0.000	0.000	33.04	0.00	0.0000	0.0000	0.0000	0.00
41	SAGBEND	-81.71	-14.54	9.95	179.65	0.000	0.000	33.04	0.00	0.0000	0.0000	0.0000	0.00
42	SAGBEND	-87.67	-15.59	9.93	185.70	0.000	0.000	33.04	0.00	0.0000	0.0000	0.0000	0.00
43	SAGBEND	-93.63	-16.63	9.90	191.75	0.000	0.000	33.03	0.00	0.0000	0.0000	0.0000	0.00
44	SAGBEND	-99.59	-17.67	9.87	197.80	0.000	0.000	33.03	0.00	0.0000	0.0000	0.0000	0.00
45	SAGBEND	-105.55	-18.70	9.85	203.85	0.000	0.000	33.03	0.00	0.0000	0.0000	0.0000	0.00
46	SAGBEND	-111.51	-19.73	9.82	209.90	0.000	0.000	33.03	0.00	0.0000	0.0000	0.0000	0.00
47	SAGBEND	-117.47	-20.77	9.79	215.95	0.000	0.000	33.02	0.00	0.0000	0.0000	0.0000	0.00
48	SAGBEND	-123.44	-21.79	9.77	222.00	0.000	0.000	33.02	0.00	0.0000	0.0000	0.0000	0.00
49	SAGBEND	-129.40	-22.82	9.74	228.05	0.000	0.000	33.02	0.00	0.0000	0.0000	0.0000	0.00
50	SAGBEND	-135.36	-23.84	9.71	234.10	0.000	0.000	33.02	0.00	0.0000	0.0000	0.0000	0.00
51	SAGBEND	-141.32	-24.86	9.68	240.15	0.000	0.000	33.01	0.00	0.0000	0.0000	0.0000	0.00
52	SAGBEND	-147.29	-25.87	9.66	246.20	0.000	0.000	33.01	0.00	0.0000	0.0000	0.0000	0.00
53	SAGBEND	-153.25	-26.89	9.63	252.25	0.000	0.000	33.01	0.00	0.0000	0.0000	0.0000	0.00
54	SAGBEND	-159.22	-27.90	9.60	258.30	0.000	0.000	33.00	0.00	0.0000	0.0000	0.0000	0.00
55	SAGBEND	-165.18	-28.91	9.58	264.35	0.000	0.000	33.00	0.00	0.0000	0.0000	0.0000	0.00
56	SAGBEND	-171.15	-29.91	9.55	270.40	0.000	0.000	33.00	0.00	0.0000	0.0000	0.0000	0.00
57	SAGBEND	-177.12	-30.91	9.52	276.45	0.000	0.000	33.00	0.00	0.0000	0.0000	0.0000	0.00
58	SAGBEND	-183.08	-31.91	9.49	282.50	0.000	0.000	32.99	0.00	0.0000	0.0000	0.0000	0.00
59	SAGBEND	-189.05	-32.91	9.47	288.55	0.000	0.000	32.99	0.00	0.0000	0.0000	0.0000	0.00
60	SAGBEND	-195.02	-33.90	9.44	294.60	0.000	0.000	32.99	0.00	0.0000	0.0000	0.0000	0.00

S T A T I C P I P E C O O R D I N A T E S, F O R C E S A N D S T R A I N S

NODE NO.	PIPE SECTION	X COORD (M)	Y COORD (M)	VERT ANGLE (DEG)	PIPE LENGTH (M)	SUPPORT REACTION (KN)	SEPARA -TION (M)	AXIAL TENSION (KN)	BENDING MOMENT (KN-M)	TENSILE STRAIN (PCT)	BENDING STRAIN (PCT)	TOTAL STRAIN (PCT)	PERCNT ALLOW (PCT)
61	SAGBEND	-200.99	-34.89	9.41	300.65	0.000	0.000	32.99	0.00	0.0000	0.0000	0.0000	0.00
62	SAGBEND	-206.95	-35.88	9.39	306.70	0.000	0.000	32.98	0.00	0.0000	0.0000	0.0000	0.00
63	SAGBEND	-212.92	-36.87	9.36	312.75	0.000	0.000	32.98	0.00	0.0000	0.0000	0.0000	0.00
64	SAGBEND	-216.55	-37.47	9.34	316.42	0.000	0.000	32.98	0.00	0.0000	0.0000	0.0000	0.00
65	SAGBEND	-220.18	-38.06	9.33	320.10	0.000	0.000	32.98	0.00	0.0000	0.0000	0.0000	0.00
66	SAGBEND	-224.87	-38.80	8.56	324.85	0.000	0.000	32.91	0.00	0.0000	0.0000	0.0000	0.00
67	SAGBEND	-230.86	-39.65	7.57	330.89	0.000	0.000	32.83	0.00	0.0000	0.0000	0.0000	0.00
68	SAGBEND	-236.86	-40.39	6.58	336.94	0.000	0.000	32.76	0.00	0.0000	0.0000	0.0000	0.00
69	SAGBEND	-242.88	-41.03	5.58	342.99	0.000	0.000	32.70	0.00	0.0000	0.0000	0.0000	0.00
70	SAGBEND	-248.90	-41.57	4.58	349.04	0.000	0.000	32.65	0.00	0.0000	0.0000	0.0000	0.00
71	SAGBEND	-254.94	-42.00	3.58	355.09	0.000	0.000	32.61	0.00	0.0000	0.0000	0.0000	0.00
72	SAGBEND	-260.98	-42.32	2.57	361.14	0.000	0.000	32.58	0.00	0.0000	0.0000	0.0000	0.00
73	SAGBEND	-267.02	-42.54	1.57	367.19	0.000	0.000	32.55	0.00	0.0000	0.0000	0.0000	0.00
74	SAGBEND	-273.07	-42.66	0.57	373.24	0.050	0.000	32.54	0.00	0.0000	0.0000	0.0000	0.00
75	SEABED	-279.12	-42.67	0.01	379.29	0.490	0.000	32.54	0.00	0.0000	0.0000	0.0000	0.00
76	SEABED	-285.17	-42.67	0.00	385.34	0.572	0.000	32.54	0.00	0.0000	0.0000	0.0000	0.00
77	SEABED	-291.22	-42.67	0.00	391.39	0.572	0.000	32.54	0.00	0.0000	0.0000	0.0000	0.00
78	SEABED	-297.27	-42.67	0.00	397.44	0.572	0.000	32.54	0.00	0.0000	0.0000	0.0000	0.00
79	SEABED	-303.32	-42.67	0.00	403.49	0.572	0.000	32.54	0.00	0.0000	0.0000	0.0000	0.00
80	SEABED	-309.37	-42.67	0.00	409.54	0.572	0.000	32.54	0.00	0.0000	0.0000	0.0000	0.00

81	SEABED	-315.42	-42.67	0.00	415.59	0.572	0.000	32.54	0.00	0.0000	0.0000	0.0000	0.00
82	SEABED	-321.47	-42.67	0.00	421.64	0.572	0.000	32.54	0.00	0.0000	0.0000	0.0000	0.00
83	SEABED	-327.52	-42.67	0.00	427.69	0.572	0.000	32.54	0.00	0.0000	0.0000	0.0000	0.00
84	SEABED	-333.57	-42.67	0.00	433.74	0.572	0.000	32.54	0.00	0.0000	0.0000	0.0000	0.00
85	SEABED	-339.62	-42.67	0.00	439.79	0.572	0.000	32.54	0.00	0.0000	0.0000	0.0000	0.00
86	SEABED	-345.67	-42.67	0.00	445.84	0.572	0.000	32.54	0.00	0.0000	0.0000	0.0000	0.00
87	SEABED	-351.72	-42.67	0.00	451.89	0.572	0.000	32.54	0.00	0.0000	0.0000	0.0000	0.00
88	SEABED	-357.77	-42.67	0.00	457.94	0.572	0.000	32.54	0.00	0.0000	0.0000	0.0000	0.00
89	SEABED	-363.82	-42.67	0.00	463.99	0.572	0.000	32.54	0.00	0.0000	0.0000	0.0000	0.00
90	SEABED	-369.87	-42.67	0.00	470.04	0.572	0.000	32.54	0.00	0.0000	0.0000	0.0000	0.00
91	SEABED	-375.92	-42.67	0.00	476.09	0.572	0.000	32.54	0.00	0.0000	0.0000	0.0000	0.00
92	SEABED	-381.97	-42.67	0.00	482.14	0.572	0.000	32.54	0.00	0.0000	0.0000	0.0000	0.00
93	SEABED	-388.02	-42.67	0.00	488.19	0.572	0.000	32.54	0.00	0.0000	0.0000	0.0000	0.00
94	SEABED	-394.07	-42.67	0.00	494.24	0.572	0.000	32.54	0.00	0.0000	0.0000	0.0000	0.00
95	SEABED	-400.12	-42.67	0.00	500.29	0.572	0.000	32.54	0.00	0.0000	0.0000	0.0000	0.00
96	SEABED	-406.17	-42.67	0.00	506.34	0.572	0.000	32.54	0.00	0.0000	0.0000	0.0000	0.00
97	SEABED	-412.22	-42.67	0.00	512.39	0.572	0.000	32.54	0.00	0.0000	0.0000	0.0000	0.00
98	SEABED	-418.27	-42.67	0.00	518.44	0.572	0.000	32.54	0.00	0.0000	0.0000	0.0000	0.00
99	SEABED	-424.32	-42.67	0.00	524.49	0.572	0.000	32.54	0.00	0.0000	0.0000	0.0000	0.00
100	SEABED	-430.37	-42.67	0.00	530.54	0.572	0.000	32.54	0.00	0.0000	0.0000	0.0000	0.00
101	SEABED	-436.42	-42.67	0.00	536.59	0.572	0.000	32.54	0.00	0.0000	0.0000	0.0000	0.00
102	SEABED	-442.47	-42.67	0.00	542.64	0.572	0.000	32.54	0.00	0.0000	0.0000	0.0000	0.00
103	SEABED	-448.52	-42.67	0.00	548.69	0.572	0.000	32.54	0.00	0.0000	0.0000	0.0000	0.00
104	SEABED	-454.57	-42.67	0.00	554.74	0.572	0.000	32.54	0.00	0.0000	0.0000	0.0000	0.00

S T A T I C P I P E C O O R D I N A T E S, F O R C E S A N D S T R A I N S

NODE NO.	PIPE SECTION	X COORD (M)	Y COORD (M)	VERT ANGLE (DEG)	PIPE LENGTH (M)	SUPPORT REACTION (KN)	SEPARA -TION (M)	AXIAL TENSION (KN)	BENDING MOMENT (KN-M)	TENSILE STRAIN (PCT)	BENDING STRAIN (PCT)	TOTAL STRAIN (PCT)	PERCNT ALLOW (PCT)
105	SEABED	-460.62	-42.67	0.00	560.79	0.572	0.000	32.54	0.00	0.0000	0.0000	0.0000	0.00
106	SEABED	-466.67	-42.67	0.00	566.84	0.572	0.000	32.54	0.00	0.0000	0.0000	0.0000	0.00
107	SEABED	-472.72	-42.67	0.00	572.89	0.572	0.000	32.54	0.00	0.0000	0.0000	0.0000	0.00
108	SEABED	-478.77	-42.67	0.00	578.94	0.572	0.000	32.54	0.00	0.0000	0.0000	0.0000	0.00
109	SEABED	-484.82	-42.67	0.00	584.99	0.572	0.000	32.54	0.00	0.0000	0.0000	0.0000	0.00
110	SEABED	-490.87	-42.67	0.00	591.04	0.572	0.000	32.54	0.00	0.0000	0.0000	0.0000	0.00
111	SEABED	-496.92	-42.67	0.00	597.09	0.572	0.000	32.54	0.00	0.0000	0.0000	0.0000	0.00
112	SEABED	-502.97	-42.67	0.00	603.14	0.572	0.000	32.54	0.00	0.0000	0.0000	0.0000	0.00
113	SEABED	-509.02	-42.67	0.00	609.19	0.572	0.000	32.54	0.00	0.0000	0.0000	0.0000	0.00
114	SEABED	-515.07	-42.67	0.00	615.24	0.572	0.000	32.54	0.00	0.0000	0.0000	0.0000	0.00
115	SEABED	-521.12	-42.67	0.00	621.29	0.572	0.000	32.54	0.00	0.0000	0.0000	0.0000	0.00
116	SEABED	-527.17	-42.67	0.00	627.34	0.572	0.000	32.54	0.00	0.0000	0.0000	0.0000	0.00
117	SEABED	-533.22	-42.67	0.00	633.39	0.572	0.000	32.54	0.00	0.0000	0.0000	0.0000	0.00
118	SEABED	-539.27	-42.67	0.00	639.44	0.572	0.000	32.54	0.00	0.0000	0.0000	0.0000	0.00
119	SEABED	-545.32	-42.67	0.00	645.49	0.572	0.000	32.54	0.00	0.0000	0.0000	0.0000	0.00
120	SEABED	-551.37	-42.67	0.00	651.54	0.572	0.000	32.54	0.00	0.0000	0.0000	0.0000	0.00
121	SEABED	-557.42	-42.67	0.00	657.59	0.572	0.000	32.54	0.00	0.0000	0.0000	0.0000	0.00
122	SEABED	-563.47	-42.67	0.00	663.64	0.572	0.000	32.54	0.00	0.0000	0.0000	0.0000	0.00
123	SEABED	-569.52	-42.67	0.00	669.69	0.572	0.000	32.54	0.00	0.0000	0.0000	0.0000	0.00
124	SEABED	-575.57	-42.67	0.00	675.74	0.572	0.000	32.54	0.00	0.0000	0.0000	0.0000	0.00
125	SEABED	-581.62	-42.67	0.00	681.79	0.572	0.000	32.54	0.00	0.0000	0.0000	0.0000	0.00
126	SEABED	-587.67	-42.67	0.00	687.84	0.572	0.000	32.54	0.00	0.0000	0.0000	0.0000	0.00
127	SEABED	-593.71	-42.67	0.00	693.89	0.572	0.000	32.54	0.00	0.0000	0.0000	0.0000	0.00
128	SEABED	-599.76	-42.67	0.00	699.94	0.572	0.000	32.54	0.00	0.0000	0.0000	0.0000	0.00
129	SEABED	-605.81	-42.67	0.00	705.99	0.572	0.000	32.54	0.00	0.0000	0.0000	0.0000	0.00
130	SEABED	-611.86	-42.67	0.00	712.04	0.476	0.000	32.54	0.00	0.0000	0.0000	0.0000	0.00
131	SEABED	-615.89	-42.67	-0.01	716.06	0.359	0.000	32.54	0.00	0.0000	0.0000	0.0000	0.00
132	SEABED	-619.92	-42.67	-0.16	720.09	0.000	0.000	32.54	0.00	0.0000	0.0000	0.0000	0.00

S T A T I C P I P E C O O R D I N A T E S, F O R C E S A N D S T R A I N S

NODE NO.	PIPE SECTION	X COORD (M)	Y COORD (M)	VERT ANGLE (DEG)	PIPE LENGTH (M)	SUPPORT REACTION (KN)	SEPARA -TION (M)	AXIAL TENSION (KN)	BENDING MOMENT (KN-M)	TENSILE STRAIN (PCT)	BENDING STRAIN (PCT)	TOTAL STRAIN (PCT)	PERCNT ALLOW (PCT)
1	LAYBARGE	96.31	6.41	1.93	0.00	9.924	0.000	0.00	2.74	0.0000	0.0021	0.0021	0.00
3	LAYBARGE	84.28	6.05	1.58	12.04	24.202	0.000	-0.73	-19.28	0.0000	-0.0144	0.0145	0.00
5	LAYBARGE	73.45	5.73	1.90	22.87	24.209	0.000	-1.39	-29.08	-0.0001	-0.0217	0.0218	0.00
7	TENSIONR	60.10	5.24	2.32	36.23	32.458	0.000	61.91	-24.38	0.0029	-0.0182	0.0211	0.00
9	LAYBARGE	51.10	4.87	2.19	45.24	0.000	0.000	61.18	32.34	0.0028	0.0242	0.0270	0.00
10	LAYBARGE	46.45	4.70	1.89	49.89	8.905	0.000	60.87	14.69	0.0028	0.0110	0.0138	0.00
12	LAYBARGE	35.36	4.31	2.70	60.99	35.424	0.000	59.82	-85.61	0.0028	-0.0640	0.0668	0.00
14	LAYBARGE	25.34	3.64	4.95	71.03	23.942	0.000	58.52	-94.18	0.0027	-0.0704	0.0732	0.00
16	LAYBARGE	19.31	3.05	6.08	77.09	0.000	0.000	57.49	-57.28	0.0027	-0.0428	0.0455	0.00
17	LAYBARGE	8.88	1.76	8.60	87.60	50.172	0.000	54.31	-157.47	0.0025	-0.1181	0.1206	0.00
19	LAYBARGE	4.90	1.10	9.87	91.63	0.000	0.000	53.51	-79.61	0.0025	-0.0595	0.0620	0.00
20	LAYBARGE	3.08	0.78	10.17	93.48	0.000	0.164	52.95	-49.67	0.0025	-0.0371	0.0396	0.00
24	STINGER	-7.62	-1.17	10.18	104.36	0.000	0.158	50.26	22.18	0.0023	0.0166	0.0189	0.00
26	STINGER	-16.63	-2.76	10.05	113.50	17.065	0.000	48.66	-24.46	0.0022	-0.0183	0.0206	0.00
29	STINGER	-26.25	-4.48	10.16	123.28	1.885	0.000	46.96	0.00	0.0021	0.0000	0.0022	0.00
31	STINGER	-37.02	-6.32	9.64	134.21	0.000	0.315	46.95	0.00	0.0000	0.0000	0.0000	0.00
33	STINGER	-40.01	-6.82	9.62	137.24	0.000	0.854	46.95	0.00	0.0000	0.0000	0.0000	0.00
35	SAGBEND	-46.03	-7.84	9.61	143.35	0.000	0.000	46.95	0.00	0.0000	0.0000	0.0000	0.00
36	SAGBEND	-52.00	-8.85	9.59	149.40	0.000	0.000	46.95	0.00	0.0000	0.0000	0.0000	0.00
37	SAGBEND	-57.96	-9.86	9.57	155.45	0.000	0.000	46.95	0.00	0.0000	0.0000	0.0000	0.00
38	SAGBEND	-63.93	-10.87	9.55	161.50	0.000	0.000	46.94	0.00	0.0000	0.0000	0.0000	0.00
39	SAGBEND	-69.90	-11.87	9.53	167.55	0.000	0.000	46.94	0.00	0.0000	0.0000	0.0000	0.00
40	SAGBEND	-75.86	-12.87	9.51	173.60	0.000	0.000	46.94	0.00	0.0000	0.0000	0.0000	0.00
41	SAGBEND	-81.83	-13.87	9.49	179.65	0.000	0.000	46.93	0.00	0.0000	0.0000	0.0000	0.00
42	SAGBEND	-87.80	-14.86	9.47	185.70	0.000	0.000	46.93	0.00	0.0000	0.0000	0.0000	0.00
43	SAGBEND	-93.77	-15.86	9.46	191.75	0.000	0.000	46.93	0.00	0.0000	0.0000	0.0000	0.00
44	SAGBEND	-99.73	-16.85	9.44	197.80	0.000	0.000	46.93	0.00	0.0000	0.0000	0.0000	0.00
45	SAGBEND	-105.70	-17.84	9.42	203.85	0.000	0.000	46.92	0.00	0.0000	0.0000	0.0000	0.00
46	SAGBEND	-111.67	-18.83	9.40	209.90	0.000	0.000	46.92	0.00	0.0000	0.0000	0.0000	0.00
47	SAGBEND	-117.64	-19.82	9.38	215.95	0.000	0.000	46.92	0.00	0.0000	0.0000	0.0000	0.00
48	SAGBEND	-123.61	-20.80	9.36	222.00	0.000	0.000	46.92	0.00	0.0000	0.0000	0.0000	0.00
49	SAGBEND	-129.58	-21.79	9.34	228.05	0.000	0.000	46.91	0.00	0.0000	0.0000	0.0000	0.00
50	SAGBEND	-135.55	-22.77	9.32	234.10	0.000	0.000	46.91	0.00	0.0000	0.0000	0.0000	0.00
51	SAGBEND	-141.52	-23.75	9.30	240.15	0.000	0.000	46.91	0.00	0.0000	0.0000	0.0000	0.00
52	SAGBEND	-147.49	-24.72	9.28	246.20	0.000	0.000	46.91	0.00	0.0000	0.0000	0.0000	0.00
53	SAGBEND	-153.46	-25.70	9.27	252.25	0.000	0.000	46.90	0.00	0.0000	0.0000	0.0000	0.00
54	SAGBEND	-159.43	-26.67	9.25	258.30	0.000	0.000	46.90	0.00	0.0000	0.0000	0.0000	0.00
55	SAGBEND	-165.40	-27.64	9.23	264.35	0.000	0.000	46.90	0.00	0.0000	0.0000	0.0000	0.00
56	SAGBEND	-171.37	-28.61	9.21	270.40	0.000	0.000	46.90	0.00	0.0000	0.0000	0.0000	0.00
57	SAGBEND	-177.35	-29.58	9.19	276.45	0.000	0.000	46.89	0.00	0.0000	0.0000	0.0000	0.00
58	SAGBEND	-183.32	-30.54	9.17	282.50	0.000	0.000	46.89	0.00	0.0000	0.0000	0.0000	0.00
59	SAGBEND	-189.29	-31.51	9.15	288.55	0.000	0.000	46.89	0.00	0.0000	0.0000	0.0000	0.00
60	SAGBEND	-195.26	-32.47	9.13	294.60	0.000	0.000	46.89	0.00	0.0000	0.0000	0.0000	0.00

S T A T I C P I P E C O O R D I N A T E S, F O R C E S A N D S T R A I N S

NODE NO.	PIPE SECTION	X COORD (M)	Y COORD (M)	VERT ANGLE (DEG)	PIPE LENGTH (M)	SUPPORT REACTION (KN)	SEPARA -TION (M)	AXIAL TENSION (KN)	BENDING MOMENT (KN-M)	TENSILE STRAIN (PCT)	BENDING STRAIN (PCT)	TOTAL STRAIN (PCT)	PERCNT ALLOW (PCT)
61	SAGBEND	-201.24	-33.43	9.11	300.65	0.000	0.000	46.88	0.00	0.0000	0.0000	0.0000	0.00
62	SAGBEND	-207.21	-34.39	9.09	306.70	0.000	0.000	46.88	0.00	0.0000	0.0000	0.0000	0.00
63	SAGBEND	-213.18	-35.34	9.07	312.75	0.000	0.000	46.88	0.00	0.0000	0.0000	0.0000	0.00
64	SAGBEND	-216.82	-35.92	9.06	316.42	0.000	0.000	46.88	0.00	0.0000	0.0000	0.0000	0.00
65	SAGBEND	-220.45	-36.50	9.05	320.10	0.000	0.000	46.88	0.00	0.0000	0.0000	0.0000	0.00
66	SAGBEND	-225.14	-37.22	8.51	324.85	0.000	0.000	46.81	0.00	0.0000	0.0000	0.0000	0.00
67	SAGBEND	-231.13	-38.08	7.82	330.89	0.000	0.000	46.73	0.00	0.0000	0.0000	0.0000	0.00
68	SAGBEND	-237.12	-38.87	7.12	336.94	0.000	0.000	46.65	0.00	0.0000	0.0000	0.0000	0.00
69	SAGBEND	-243.13	-39.58	6.42	342.99	0.000	0.000	46.58	0.00	0.0000	0.0000	0.0000	0.00
70	SAGBEND	-249.15	-40.22	5.72	349.04	0.000	0.000	46.52	0.00	0.0000	0.0000	0.0000	0.00
71	SAGBEND	-255.17	-40.79	5.02	355.09	0.000	0.000	46.47	0.00	0.0000	0.0000	0.0000	0.00
72	SAGBEND	-261.20	-41.28	4.32	361.14	0.000	0.000	46.42	0.00	0.0000	0.0000	0.0000	0.00
73	SAGBEND	-267.24	-41.70	3.61	367.19	0.000	0.000	46.38	0.00	0.0000	0.0000	0.0000	0.00
74	SAGBEND	-273.28	-42.04	2.91	373.24	0.000	0.000	46.35	0.00	0.0000	0.0000	0.0000	0.00
75	SAGBEND	-279.32	-42.31	2.20	379.29	0.000	0.000	46.33	0.00	0.0000	0.0000	0.0000	0.00
76	SAGBEND	-285.37	-42.51	1.49	385.34	0.000	0.000	46.31	0.00	0.0000	0.0000	0.0000	0.00
77	SAGBEND	-291.41	-42.63	0.78	391.39	0.000	0.000	46.30	0.00	0.0000	0.0000	0.0000	0.00
78	SEABED	-297.46	-42.67	0.08	397.44	0.237	0.000	46.29	0.00	0.0000	0.0000	0.0000	0.00
79	SEABED	-303.51	-42.67	0.00	403.49	0.560	0.000	46.29	0.00	0.0000	0.0000	0.0000	0.00
80	SEABED	-309.56	-42.67	0.00	409.54	0.572	0.000	46.29	0.00	0.0000	0.0000	0.0000	0.00
81	SEABED	-315.61	-42.67	0.00	415.59	0.572	0.000	46.29	0.00	0.0000	0.0000	0.0000	0.00
82	SEABED	-321.66	-42.67	0.00	421.64	0.572	0.000	46.29	0.00	0.0000	0.0000	0.0000	0.00
83	SEABED	-327.71	-42.67	0.00	427.69	0.572	0.000	46.29	0.00	0.0000	0.0000	0.0000	0.00
84	SEABED	-333.76	-42.67	0.00	433.74	0.572	0.000	46.29	0.00	0.0000	0.0000	0.0000	0.00
85	SEABED	-339.81	-42.67	0.00	439.79	0.572	0.000	46.29	0.00	0.0000	0.0000	0.0000	0.00
86	SEABED	-345.86	-42.67	0.00	445.84	0.572	0.000	46.29	0.00	0.0000	0.0000	0.0000	0.00
87	SEABED	-351.91	-42.67	0.00	451.89	0.572	0.000	46.29	0.00	0.0000	0.0000	0.0000	0.00
88	SEABED	-357.96	-42.67	0.00	457.94	0.572	0.000	46.29	0.00	0.0000	0.0000	0.0000	0.00
89	SEABED	-364.01	-42.67	0.00	463.99	0.572	0.000	46.29	0.00	0.0000	0.0000	0.0000	0.00
90	SEABED	-370.06	-42.67	0.00	470.04	0.572	0.000	46.29	0.00	0.0000	0.0000	0.0000	0.00
91	SEABED	-376.11	-42.67	0.00	476.09	0.572	0.000	46.29	0.00	0.0000	0.0000	0.0000	0.00
92	SEABED	-382.16	-42.67	0.00	482.14	0.572	0.000	46.29	0.00	0.0000	0.0000	0.0000	0.00

93	SEABED	-388.21	-42.67	0.00	488.19	0.572	0.000	46.29	0.00	0.0000	0.0000	0.0000	0.00
94	SEABED	-394.26	-42.67	0.00	494.24	0.572	0.000	46.29	0.00	0.0000	0.0000	0.0000	0.00
95	SEABED	-400.31	-42.67	0.00	500.29	0.572	0.000	46.29	0.00	0.0000	0.0000	0.0000	0.00
96	SEABED	-406.36	-42.67	0.00	506.34	0.572	0.000	46.29	0.00	0.0000	0.0000	0.0000	0.00
97	SEABED	-412.41	-42.67	0.00	512.39	0.572	0.000	46.29	0.00	0.0000	0.0000	0.0000	0.00
98	SEABED	-418.46	-42.67	0.00	518.44	0.572	0.000	46.29	0.00	0.0000	0.0000	0.0000	0.00
99	SEABED	-424.51	-42.67	0.00	524.49	0.572	0.000	46.29	0.00	0.0000	0.0000	0.0000	0.00
100	SEABED	-430.56	-42.67	0.00	530.54	0.572	0.000	46.29	0.00	0.0000	0.0000	0.0000	0.00
101	SEABED	-436.61	-42.67	0.00	536.59	0.572	0.000	46.29	0.00	0.0000	0.0000	0.0000	0.00
102	SEABED	-442.66	-42.67	0.00	542.64	0.572	0.000	46.29	0.00	0.0000	0.0000	0.0000	0.00
103	SEABED	-448.71	-42.67	0.00	548.69	0.572	0.000	46.29	0.00	0.0000	0.0000	0.0000	0.00
104	SEABED	-454.76	-42.67	0.00	554.74	0.572	0.000	46.29	0.00	0.0000	0.0000	0.0000	0.00

S T A T I C P I P E C O O R D I N A T E S, F O R C E S A N D S T R A I N S

NODE NO.	PIPE SECTION	X COORD (M)	Y COORD (M)	VERT ANGLE (DEG)	PIPE LENGTH (M)	SUPPORT REACTION (KN)	SEPARA -TION (M)	AXIAL TENSION (KN)	BENDING MOMENT (KN-M)	TENSILE STRAIN (PCT)	BENDING STRAIN (PCT)	TOTAL STRAIN (PCT)	PERCNT ALLOW (PCT)
105	SEABED	-460.81	-42.67	0.00	560.79	0.572	0.000	46.29	0.00	0.0000	0.0000	0.0000	0.00
106	SEABED	-466.86	-42.67	0.00	566.84	0.572	0.000	46.29	0.00	0.0000	0.0000	0.0000	0.00
107	SEABED	-472.91	-42.67	0.00	572.89	0.572	0.000	46.29	0.00	0.0000	0.0000	0.0000	0.00
108	SEABED	-478.96	-42.67	0.00	578.94	0.572	0.000	46.29	0.00	0.0000	0.0000	0.0000	0.00
109	SEABED	-485.01	-42.67	0.00	584.99	0.572	0.000	46.29	0.00	0.0000	0.0000	0.0000	0.00
110	SEABED	-491.06	-42.67	0.00	591.04	0.572	0.000	46.29	0.00	0.0000	0.0000	0.0000	0.00
111	SEABED	-497.11	-42.67	0.00	597.09	0.572	0.000	46.29	0.00	0.0000	0.0000	0.0000	0.00
112	SEABED	-503.16	-42.67	0.00	603.14	0.572	0.000	46.29	0.00	0.0000	0.0000	0.0000	0.00
113	SEABED	-509.21	-42.67	0.00	609.19	0.572	0.000	46.29	0.00	0.0000	0.0000	0.0000	0.00
114	SEABED	-515.26	-42.67	0.00	615.24	0.572	0.000	46.29	0.00	0.0000	0.0000	0.0000	0.00
115	SEABED	-521.31	-42.67	0.00	621.29	0.572	0.000	46.29	0.00	0.0000	0.0000	0.0000	0.00
116	SEABED	-527.36	-42.67	0.00	627.34	0.572	0.000	46.29	0.00	0.0000	0.0000	0.0000	0.00
117	SEABED	-533.41	-42.67	0.00	633.39	0.572	0.000	46.29	0.00	0.0000	0.0000	0.0000	0.00
118	SEABED	-539.46	-42.67	0.00	639.44	0.572	0.000	46.29	0.00	0.0000	0.0000	0.0000	0.00
119	SEABED	-545.51	-42.67	0.00	645.49	0.572	0.000	46.29	0.00	0.0000	0.0000	0.0000	0.00
120	SEABED	-551.56	-42.67	0.00	651.54	0.572	0.000	46.29	0.00	0.0000	0.0000	0.0000	0.00
121	SEABED	-557.61	-42.67	0.00	657.59	0.572	0.000	46.29	0.00	0.0000	0.0000	0.0000	0.00
122	SEABED	-563.66	-42.67	0.00	663.64	0.572	0.000	46.29	0.00	0.0000	0.0000	0.0000	0.00
123	SEABED	-569.71	-42.67	0.00	669.69	0.572	0.000	46.29	0.00	0.0000	0.0000	0.0000	0.00
124	SEABED	-575.76	-42.67	0.00	675.74	0.572	0.000	46.29	0.00	0.0000	0.0000	0.0000	0.00
125	SEABED	-581.81	-42.67	0.00	681.79	0.572	0.000	46.29	0.00	0.0000	0.0000	0.0000	0.00
126	SEABED	-587.86	-42.67	0.00	687.84	0.572	0.000	46.29	0.00	0.0000	0.0000	0.0000	0.00
127	SEABED	-593.91	-42.67	0.00	693.89	0.572	0.000	46.29	0.00	0.0000	0.0000	0.0000	0.00
128	SEABED	-599.96	-42.67	0.00	699.94	0.572	0.000	46.29	0.00	0.0000	0.0000	0.0000	0.00
129	SEABED	-606.01	-42.67	0.00	705.99	0.572	0.000	46.29	0.00	0.0000	0.0000	0.0000	0.00
130	SEABED	-612.06	-42.67	0.00	712.04	0.475	0.000	46.29	0.00	0.0000	0.0000	0.0000	0.00
131	SEABED	-616.09	-42.67	-0.01	716.06	0.350	0.000	46.29	0.00	0.0000	0.0000	0.0000	0.00
132	SEABED	-620.11	-42.67	-0.14	720.09	0.000	0.000	46.29	0.00	0.0000	0.0000	0.0000	0.00

S T A T I C P I P E C O O R D I N A T E S, F O R C E S A N D S T R A I N S

NODE NO.	PIPE SECTION	X COORD (M)	Y COORD (M)	VERT ANGLE (DEG)	PIPE LENGTH (M)	SUPPORT REACTION (KN)	SEPARA -TION (M)	AXIAL TENSION (KN)	BENDING MOMENT (KN-M)	TENSILE STRAIN (PCT)	BENDING STRAIN (PCT)	TOTAL STRAIN (PCT)	PERCNT ALLOW (PCT)
1	LAYBARGE	96.31	6.41	1.93	0.00	9.921	0.000	0.00	2.74	0.0000	0.0020	0.0020	0.00
3	LAYBARGE	84.28	6.05	1.58	12.04	24.217	0.000	-0.73	-19.31	0.0000	-0.0144	0.0145	0.00
5	LAYBARGE	73.45	5.73	1.89	22.87	24.158	0.000	-1.39	-28.98	-0.0001	-0.0217	0.0217	0.00
7	TENSIONR	60.10	5.24	2.32	36.23	32.631	0.000	61.91	-24.65	0.0029	-0.0184	0.0213	0.00
9	LAYBARGE	51.10	4.87	2.19	45.24	0.000	0.000	61.18	33.17	0.0028	0.0248	0.0277	0.00
10	LAYBARGE	46.45	4.70	1.87	49.89	8.059	0.000	60.87	15.96	0.0028	0.0119	0.0148	0.00
12	LAYBARGE	35.36	4.31	2.75	60.99	39.292	0.000	59.79	-89.07	0.0028	-0.0666	0.0694	0.00
14	LAYBARGE	25.34	3.64	4.76	71.03	14.334	0.000	58.62	-71.43	0.0027	-0.0534	0.0562	0.00
16	LAYBARGE	19.31	3.08	5.78	77.09	0.000	0.000	57.52	-69.19	0.0027	-0.0518	0.0544	0.00
17	LAYBARGE	8.89	1.76	9.54	87.60	54.898	0.000	53.54	-237.45	0.0025	-0.6575	0.6600	0.00
19	LAYBARGE	4.92	1.01	11.71	91.63	0.000	0.000	52.79	-172.94	0.0025	-0.1309	0.1334	0.00
20	LAYBARGE	3.11	0.62	12.47	93.48	1.598	0.000	52.19	-149.56	0.0024	-0.1120	0.1144	0.00
24	STINGER	-7.55	-2.07	15.66	104.48	15.883	0.000	49.12	-105.56	0.0022	-0.0789	0.0812	0.00
26	STINGER	-16.32	-4.68	17.22	113.63	8.410	0.000	46.72	-42.98	0.0020	-0.0321	0.0343	0.00
29	STINGER	-25.69	-7.62	17.43	123.45	3.243	0.000	43.82	10.82	0.0018	0.0081	0.0101	0.00
31	STINGER	-36.12	-10.85	17.02	134.37	0.000	0.221	40.59	0.00	0.0016	0.0000	0.0019	0.00
33	STINGER	-38.93	-11.27	8.51	137.22	0.000	1.176	41.05	0.00	0.0000	0.0000	0.0000	0.00
35	SAGBEND	-45.00	-12.18	8.49	143.35	0.000	0.000	41.05	0.00	0.0000	0.0000	0.0000	0.00
36	SAGBEND	-50.99	-13.07	8.46	149.40	0.000	0.000	41.04	0.00	0.0000	0.0000	0.0000	0.00
37	SAGBEND	-56.97	-13.96	8.44	155.45	0.000	0.000	41.04	0.00	0.0000	0.0000	0.0000	0.00
38	SAGBEND	-62.95	-14.85	8.42	161.50	0.000	0.000	41.04	0.00	0.0000	0.0000	0.0000	0.00
39	SAGBEND	-68.94	-15.73	8.40	167.55	0.000	0.000	41.04	0.00	0.0000	0.0000	0.0000	0.00
40	SAGBEND	-74.92	-16.61	8.38	173.60	0.000	0.000	41.03	0.00	0.0000	0.0000	0.0000	0.00
41	SAGBEND	-80.91	-17.49	8.36	179.65	0.000	0.000	41.03	0.00	0.0000	0.0000	0.0000	0.00
42	SAGBEND	-86.90	-18.37	8.33	185.70	0.000	0.000	41.03	0.00	0.0000	0.0000	0.0000	0.00
43	SAGBEND	-92.88	-19.25	8.31	191.75	0.000	0.000	41.03	0.00	0.0000	0.0000	0.0000	0.00
44	SAGBEND	-98.87	-20.12	8.29	197.80	0.000	0.000	41.02	0.00	0.0000	0.0000	0.0000	0.00
45	SAGBEND	-104.86	-20.99	8.27	203.85	0.000	0.000	41.02	0.00	0.0000	0.0000	0.0000	0.00
46	SAGBEND	-110.84	-21.86	8.25	209.90	0.000	0.000	41.02	0.00	0.0000	0.0000	0.0000	0.00
47	SAGBEND	-116.83	-22.73	8.22	215.95	0.000	0.000	41.02	0.00	0.0000	0.0000	0.0000	0.00
48	SAGBEND	-122.82	-23.59	8.20	222.00	0.000	0.000	41.02	0.00	0.0000	0.0000	0.0000	0.00
49	SAGBEND	-128.81	-24.45	8.18	228.05	0.000	0.000	41.01	0.00	0.0000	0.0000	0.0000	0.00
50	SAGBEND	-134.79	-25.31	8.16	234.10	0.000	0.000	41.01	0.00	0.0000	0.0000	0.0000	0.00
51	SAGBEND	-140.78	-26.17	8.14	240.15	0.000	0.000	41.01	0.00	0.0000	0.0000	0.0000	0.00
52	SAGBEND	-146.77	-27.03	8.12	246.20	0.000	0.000	41.01	0.00	0.0000	0.0000	0.0000	0.00
53	SAGBEND	-152.76	-27.88	8.09	252.25	0.000	0.000	41.00	0.00	0.0000	0.0000	0.0000	0.00
54	SAGBEND	-158.75	-28.73	8.07	258.30	0.000	0.000	41.00	0.00	0.0000	0.0000	0.0000	0.00
55	SAGBEND	-164.74	-29.58	8.05	264.35	0.000	0.000	41.00	0.00	0.0000	0.0000	0.0000	0.00
56	SAGBEND	-170.73	-30.42	8.03	270.40	0.000	0.000	41.00	0.00	0.0000	0.0000	0.0000	0.00
57	SAGBEND	-176.72	-31.27	8.01	276.45	0.000	0.000	41.00	0.00	0.0000	0.0000	0.0000	0.00
58	SAGBEND	-182.71	-32.11	7.98	282.50	0.000	0.000	40.99	0.00	0.0000	0.0000	0.0000	0.00
59	SAGBEND	-188.70	-32.95	7.96	288.55	0.000	0.000	40.99	0.00	0.0000	0.0000	0.0000	0.00
60	SAGBEND	-194.70	-33.79	7.94	294.60	0.000	0.000	40.99	0.00	0.0000	0.0000	0.0000	0.00

S T A T I C P I P E C O O R D I N A T E S, F O R C E S A N D S T R A I N S

NODE NO.	PIPE SECTION	X COORD (M)	Y COORD (M)	VERT ANGLE (DEG)	PIPE LENGTH (M)	SUPPORT REACTION (KN)	SEPARA -TION (M)	AXIAL TENSION (KN)	BENDING MOMENT (KN-M)	TENSILE STRAIN (PCT)	BENDING STRAIN (PCT)	TOTAL STRAIN (PCT)	PERCNT ALLOW (PCT)
61	SAGBEND	-200.69	-34.62	7.92	300.65	0.000	0.000	40.99	0.00	0.0000	0.0000	0.0000	0.00
62	SAGBEND	-206.68	-35.45	7.90	306.70	0.000	0.000	40.98	0.00	0.0000	0.0000	0.0000	0.00
63	SAGBEND	-212.67	-36.28	7.87	312.75	0.000	0.000	40.98	0.00	0.0000	0.0000	0.0000	0.00
64	SAGBEND	-218.66	-37.11	7.85	318.80	0.000	0.000	40.98	0.00	0.0000	0.0000	0.0000	0.00
65	SAGBEND	-224.66	-37.94	7.83	324.85	0.000	0.000	40.98	0.00	0.0000	0.0000	0.0000	0.00
66	SAGBEND	-229.87	-38.65	7.81	330.11	0.000	0.000	40.98	0.00	0.0000	0.0000	0.0000	0.00
67	SAGBEND	-236.65	-39.53	6.91	336.95	0.000	0.000	40.89	0.00	0.0000	0.0000	0.0000	0.00
68	SAGBEND	-242.66	-40.21	6.12	343.00	0.000	0.000	40.83	0.00	0.0000	0.0000	0.0000	0.00
69	SAGBEND	-248.68	-40.82	5.32	349.05	0.000	0.000	40.77	0.00	0.0000	0.0000	0.0000	0.00
70	SAGBEND	-254.71	-41.34	4.52	355.10	0.000	0.000	40.72	0.00	0.0000	0.0000	0.0000	0.00
71	SAGBEND	-260.74	-41.77	3.71	361.15	0.000	0.000	40.68	0.00	0.0000	0.0000	0.0000	0.00
72	SAGBEND	-266.78	-42.12	2.91	367.20	0.000	0.000	40.65	0.00	0.0000	0.0000	0.0000	0.00
73	SAGBEND	-272.83	-42.38	2.10	373.24	0.000	0.000	40.62	0.00	0.0000	0.0000	0.0000	0.00
74	SAGBEND	-278.87	-42.56	1.30	379.29	0.000	0.000	40.61	0.00	0.0000	0.0000	0.0000	0.00
75	SAGBEND	-284.92	-42.66	0.50	385.34	0.040	0.000	40.60	-0.01	0.0000	0.0000	0.0000	0.00
76	SEABED	-290.97	-42.67	0.01	391.39	0.473	0.000	40.60	0.00	0.0000	0.0000	0.0000	0.00
77	SEABED	-297.02	-42.67	0.00	397.44	0.571	0.000	40.60	0.00	0.0000	0.0000	0.0000	0.00
78	SEABED	-303.07	-42.67	0.00	403.49	0.572	0.000	40.60	0.00	0.0000	0.0000	0.0000	0.00
79	SEABED	-309.12	-42.67	0.00	409.54	0.572	0.000	40.60	0.00	0.0000	0.0000	0.0000	0.00
80	SEABED	-315.17	-42.67	0.00	415.59	0.572	0.000	40.60	0.00	0.0000	0.0000	0.0000	0.00
81	SEABED	-321.22	-42.67	0.00	421.64	0.572	0.000	40.60	0.00	0.0000	0.0000	0.0000	0.00
82	SEABED	-327.27	-42.67	0.00	427.69	0.572	0.000	40.60	0.00	0.0000	0.0000	0.0000	0.00
83	SEABED	-333.32	-42.67	0.00	433.74	0.572	0.000	40.60	0.00	0.0000	0.0000	0.0000	0.00
84	SEABED	-339.37	-42.67	0.00	439.79	0.572	0.000	40.60	0.00	0.0000	0.0000	0.0000	0.00
85	SEABED	-345.42	-42.67	0.00	445.84	0.572	0.000	40.60	0.00	0.0000	0.0000	0.0000	0.00
86	SEABED	-351.47	-42.67	0.00	451.89	0.572	0.000	40.60	0.00	0.0000	0.0000	0.0000	0.00
87	SEABED	-357.52	-42.67	0.00	457.94	0.572	0.000	40.60	0.00	0.0000	0.0000	0.0000	0.00
88	SEABED	-363.57	-42.67	0.00	463.99	0.572	0.000	40.60	0.00	0.0000	0.0000	0.0000	0.00
89	SEABED	-369.62	-42.67	0.00	470.04	0.572	0.000	40.60	0.00	0.0000	0.0000	0.0000	0.00
90	SEABED	-375.67	-42.67	0.00	476.09	0.572	0.000	40.60	0.00	0.0000	0.0000	0.0000	0.00
91	SEABED	-381.72	-42.67	0.00	482.14	0.572	0.000	40.60	0.00	0.0000	0.0000	0.0000	0.00
92	SEABED	-387.77	-42.67	0.00	488.19	0.572	0.000	40.60	0.00	0.0000	0.0000	0.0000	0.00
93	SEABED	-393.82	-42.67	0.00	494.24	0.572	0.000	40.60	0.00	0.0000	0.0000	0.0000	0.00
94	SEABED	-399.87	-42.67	0.00	500.29	0.572	0.000	40.60	0.00	0.0000	0.0000	0.0000	0.00
95	SEABED	-405.92	-42.67	0.00	506.34	0.572	0.000	40.60	0.00	0.0000	0.0000	0.0000	0.00
96	SEABED	-411.97	-42.67	0.00	512.39	0.572	0.000	40.60	0.00	0.0000	0.0000	0.0000	0.00
97	SEABED	-418.01	-42.67	0.00	518.44	0.572	0.000	40.60	0.00	0.0000	0.0000	0.0000	0.00
98	SEABED	-424.06	-42.67	0.00	524.49	0.572	0.000	40.60	0.00	0.0000	0.0000	0.0000	0.00
99	SEABED	-430.11	-42.67	0.00	530.54	0.572	0.000	40.60	0.00	0.0000	0.0000	0.0000	0.00
100	SEABED	-436.16	-42.67	0.00	536.59	0.572	0.000	40.60	0.00	0.0000	0.0000	0.0000	0.00
101	SEABED	-442.21	-42.67	0.00	542.64	0.572	0.000	40.60	0.00	0.0000	0.0000	0.0000	0.00
102	SEABED	-448.26	-42.67	0.00	548.68	0.572	0.000	40.60	0.00	0.0000	0.0000	0.0000	0.00
103	SEABED	-454.31	-42.67	0.00	554.73	0.572	0.000	40.60	0.00	0.0000	0.0000	0.0000	0.00
104	SEABED	-460.36	-42.67	0.00	560.78	0.572	0.000	40.60	0.00	0.0000	0.0000	0.0000	0.00

S T A T I C P I P E C O O R D I N A T E S, F O R C E S A N D S T R A I N S

NODE NO.	PIPE SECTION	X COORD (M)	Y COORD (M)	VERT ANGLE (DEG)	PIPE LENGTH (M)	SUPPORT REACTION (KN)	SEPARA -TION (M)	AXIAL TENSION (KN)	BENDING MOMENT (KN-M)	TENSILE STRAIN (PCT)	BENDING STRAIN (PCT)	TOTAL STRAIN (PCT)	PERCNT ALLOW (PCT)
105	SEABED	-466.41	-42.67	0.00	566.83	0.572	0.000	40.60	0.00	0.0000	0.0000	0.0000	0.00
106	SEABED	-472.46	-42.67	0.00	572.88	0.572	0.000	40.60	0.00	0.0000	0.0000	0.0000	0.00
107	SEABED	-478.51	-42.67	0.00	578.93	0.572	0.000	40.60	0.00	0.0000	0.0000	0.0000	0.00
108	SEABED	-484.56	-42.67	0.00	584.98	0.572	0.000	40.60	0.00	0.0000	0.0000	0.0000	0.00
109	SEABED	-490.61	-42.67	0.00	591.03	0.572	0.000	40.60	0.00	0.0000	0.0000	0.0000	0.00
110	SEABED	-496.66	-42.67	0.00	597.08	0.572	0.000	40.60	0.00	0.0000	0.0000	0.0000	0.00
111	SEABED	-502.71	-42.67	0.00	603.13	0.572	0.000	40.60	0.00	0.0000	0.0000	0.0000	0.00
112	SEABED	-508.76	-42.67	0.00	609.18	0.572	0.000	40.60	0.00	0.0000	0.0000	0.0000	0.00
113	SEABED	-514.81	-42.67	0.00	615.23	0.572	0.000	40.60	0.00	0.0000	0.0000	0.0000	0.00
114	SEABED	-520.86	-42.67	0.00	621.28	0.572	0.000	40.60	0.00	0.0000	0.0000	0.0000	0.00
115	SEABED	-526.91	-42.67	0.00	627.33	0.572	0.000	40.60	0.00	0.0000	0.0000	0.0000	0.00
116	SEABED	-532.96	-42.67	0.00	633.38	0.572	0.000	40.60	0.00	0.0000	0.0000	0.0000	0.00
117	SEABED	-539.01	-42.67	0.00	639.43	0.572	0.000	40.60	0.00	0.0000	0.0000	0.0000	0.00
118	SEABED	-545.06	-42.67	0.00	645.48	0.572	0.000	40.60	0.00	0.0000	0.0000	0.0000	0.00
119	SEABED	-551.11	-42.67	0.00	651.53	0.572	0.000	40.60	0.00	0.0000	0.0000	0.0000	0.00
120	SEABED	-557.16	-42.67	0.00	657.58	0.572	0.000	40.60	0.00	0.0000	0.0000	0.0000	0.00
121	SEABED	-563.21	-42.67	0.00	663.63	0.572	0.000	40.60	0.00	0.0000	0.0000	0.0000	0.00
122	SEABED	-569.26	-42.67	0.00	669.68	0.572	0.000	40.60	0.00	0.0000	0.0000	0.0000	0.00
123	SEABED	-575.31	-42.67	0.00	675.73	0.572	0.000	40.60	0.00	0.0000	0.0000	0.0000	0.00
124	SEABED	-581.36	-42.67	0.00	681.78	0.572	0.000	40.60	0.00	0.0000	0.0000	0.0000	0.00
125	SEABED	-587.41	-42.67	0.00	687.83	0.572	0.000	40.60	0.00	0.0000	0.0000	0.0000	0.00
126	SEABED	-593.46	-42.67	0.00	693.88	0.572	0.000	40.60	0.00	0.0000	0.0000	0.0000	0.00
127	SEABED	-599.50	-42.67	0.00	699.93	0.572	0.000	40.60	0.00	0.0000	0.0000	0.0000	0.00
128	SEABED	-605.55	-42.67	0.00	705.98	0.572	0.000	40.60	0.00	0.0000	0.0000	0.0000	0.00
129	SEABED	-611.60	-42.67	0.00	712.03	0.572	0.000	40.60	0.00	0.0000	0.0000	0.0000	0.00
130	SEABED	-617.65	-42.67	0.00	718.08	0.572	0.000	40.60	0.00	0.0000	0.0000	0.0000	0.00
131	SEABED	-623.70	-42.67	-0.01	724.13	0.550	0.000	40.60	0.00	0.0000	0.0000	0.0000	0.00
132	SEABED	-629.66	-42.67	-0.13	730.08	0.000	0.000	40.60	0.00	0.0000	0.0000	0.0000	0.00

S T A T I C P I P E C O O R D I N A T E S, F O R C E S A N D S T R A I N S

NODE NO.	PIPE SECTION	X COORD (M)	Y COORD (M)	VERT ANGLE (DEG)	PIPE LENGTH (M)	SUPPORT REACTION (KN)	SEPARA -TION (M)	AXIAL TENSION (KN)	BENDING MOMENT (KN-M)	TENSILE STRAIN (PCT)	BENDING STRAIN (PCT)	TOTAL STRAIN (PCT)	PERCNT ALLOW (PCT)
1	LAYBARGE	96.31	6.41	1.93	0.00	9.922	0.000	0.00	2.74	0.0000	0.0020	0.0020	0.00
3	LAYBARGE	84.28	6.05	1.58	12.04	24.214	0.000	-0.73	-19.30	0.0000	-0.0144	0.0145	0.00
5	LAYBARGE	73.45	5.73	1.89	22.87	24.168	0.000	-1.39	-29.00	-0.0001	-0.0217	0.0218	0.00
7	TENSIONR	60.10	5.24	2.32	36.23	32.611	0.000	71.41	-24.58	0.0033	-0.0184	0.0217	0.00
9	LAYBARGE	51.10	4.87	2.19	45.24	0.000	0.000	70.68	33.00	0.0033	0.0247	0.0280	0.00
10	LAYBARGE	46.45	4.70	1.87	49.89	8.023	0.000	70.37	15.95	0.0033	0.0119	0.0152	0.00
12	LAYBARGE	35.36	4.31	2.75	60.99	39.431	0.000	69.29	-88.92	0.0032	-0.0665	0.0697	0.00
14	LAYBARGE	25.34	3.64	4.77	71.03	15.154	0.000	68.12	-72.79	0.0032	-0.0544	0.0576	0.00
16	LAYBARGE	19.31	3.08	5.80	77.09	0.000	0.000	67.02	-68.34	0.0031	-0.0511	0.0542	0.00
17	LAYBARGE	8.89	1.76	9.50	87.60	57.818	0.000	63.06	-234.72	0.0029	-0.5648	0.5677	0.00
19	LAYBARGE	4.92	1.01	11.60	91.63	0.000	0.000	62.39	-160.87	0.0029	-0.1207	0.1236	0.00
20	LAYBARGE	3.11	0.63	12.29	93.48	0.000	0.009	61.81	-133.17	0.0029	-0.0996	0.1025	0.00
24	STINGER	-7.55	-1.97	14.90	104.46	13.400	0.000	58.82	-81.75	0.0027	-0.0611	0.0639	0.00
26	STINGER	-16.36	-4.43	16.10	113.60	9.837	0.000	56.48	-35.12	0.0025	-0.0263	0.0289	0.00
29	STINGER	-25.78	-7.17	16.15	123.41	2.972	0.000	53.77	15.83	0.0023	0.0118	0.0143	0.00
31	STINGER	-36.29	-10.16	15.67	134.34	0.000	0.201	50.78	0.00	0.0021	0.0000	0.0024	0.00
33	STINGER	-39.14	-10.58	8.35	137.22	0.000	1.093	51.20	0.00	0.0000	0.0000	0.0000	0.00
35	SAGBEND	-45.21	-11.47	8.34	143.35	0.000	0.000	51.20	0.00	0.0000	0.0000	0.0000	0.00
36	SAGBEND	-51.19	-12.35	8.32	149.40	0.000	0.000	51.20	0.00	0.0000	0.0000	0.0000	0.00
37	SAGBEND	-57.18	-13.22	8.30	155.45	0.000	0.000	51.20	0.00	0.0000	0.0000	0.0000	0.00
38	SAGBEND	-63.16	-14.09	8.28	161.50	0.000	0.000	51.19	0.00	0.0000	0.0000	0.0000	0.00
39	SAGBEND	-69.15	-14.96	8.27	167.55	0.000	0.000	51.19	0.00	0.0000	0.0000	0.0000	0.00
40	SAGBEND	-75.14	-15.83	8.25	173.60	0.000	0.000	51.19	0.00	0.0000	0.0000	0.0000	0.00
41	SAGBEND	-81.13	-16.70	8.23	179.65	0.000	0.000	51.19	0.00	0.0000	0.0000	0.0000	0.00
42	SAGBEND	-87.11	-17.56	8.21	185.70	0.000	0.000	51.19	0.00	0.0000	0.0000	0.0000	0.00
43	SAGBEND	-93.10	-18.43	8.20	191.75	0.000	0.000	51.18	0.00	0.0000	0.0000	0.0000	0.00
44	SAGBEND	-99.09	-19.29	8.18	197.80	0.000	0.000	51.18	0.00	0.0000	0.0000	0.0000	0.00
45	SAGBEND	-105.08	-20.15	8.16	203.85	0.000	0.000	51.18	0.00	0.0000	0.0000	0.0000	0.00
46	SAGBEND	-111.07	-21.01	8.14	209.90	0.000	0.000	51.18	0.00	0.0000	0.0000	0.0000	0.00
47	SAGBEND	-117.05	-21.86	8.13	215.95	0.000	0.000	51.17	0.00	0.0000	0.0000	0.0000	0.00
48	SAGBEND	-123.04	-22.72	8.11	222.00	0.000	0.000	51.17	0.00	0.0000	0.0000	0.0000	0.00
49	SAGBEND	-129.03	-23.57	8.09	228.05	0.000	0.000	51.17	0.00	0.0000	0.0000	0.0000	0.00
50	SAGBEND	-135.02	-24.42	8.07	234.10	0.000	0.000	51.17	0.00	0.0000	0.0000	0.0000	0.00
51	SAGBEND	-141.01	-25.27	8.06	240.15	0.000	0.000	51.16	0.00	0.0000	0.0000	0.0000	0.00
52	SAGBEND	-147.00	-26.12	8.04	246.20	0.000	0.000	51.16	0.00	0.0000	0.0000	0.0000	0.00
53	SAGBEND	-152.99	-26.96	8.02	252.25	0.000	0.000	51.16	0.00	0.0000	0.0000	0.0000	0.00
54	SAGBEND	-158.98	-27.80	8.00	258.30	0.000	0.000	51.16	0.00	0.0000	0.0000	0.0000	0.00
55	SAGBEND	-164.98	-28.65	7.99	264.35	0.000	0.000	51.16	0.00	0.0000	0.0000	0.0000	0.00
56	SAGBEND	-170.97	-29.49	7.97	270.40	0.000	0.000	51.15	0.00	0.0000	0.0000	0.0000	0.00
57	SAGBEND	-176.96	-30.32	7.95	276.45	0.000	0.000	51.15	0.00	0.0000	0.0000	0.0000	0.00
58	SAGBEND	-182.95	-31.16	7.93	282.50	0.000	0.000	51.15	0.00	0.0000	0.0000	0.0000	0.00
59	SAGBEND	-188.94	-31.99	7.92	288.55	0.000	0.000	51.15	0.00	0.0000	0.0000	0.0000	0.00
60	SAGBEND	-194.93	-32.83	7.90	294.60	0.000	0.000	51.15	0.00	0.0000	0.0000	0.0000	0.00

S T A T I C P I P E C O O R D I N A T E S, F O R C E S A N D S T R A I N S

NODE NO.	PIPE SECTION	X COORD (M)	Y COORD (M)	VERT ANGLE (DEG)	PIPE LENGTH (M)	SUPPORT REACTION (KN)	SEPARA -TION (M)	AXIAL TENSION (KN)	BENDING MOMENT (KN-M)	TENSILE STRAIN (PCT)	BENDING STRAIN (PCT)	TOTAL STRAIN (PCT)	PERCNT ALLOW (PCT)
61	SAGBEND	-200.93	-33.66	7.88	300.65	0.000	0.000	51.14	0.00	0.0000	0.0000	0.0000	0.00
62	SAGBEND	-206.92	-34.49	7.86	306.70	0.000	0.000	51.14	0.00	0.0000	0.0000	0.0000	0.00
63	SAGBEND	-212.91	-35.31	7.85	312.75	0.000	0.000	51.14	0.00	0.0000	0.0000	0.0000	0.00
64	SAGBEND	-218.91	-36.14	7.83	318.80	0.000	0.000	51.14	0.00	0.0000	0.0000	0.0000	0.00
65	SAGBEND	-224.90	-36.96	7.81	324.85	0.000	0.000	51.13	0.00	0.0000	0.0000	0.0000	0.00
66	SAGBEND	-230.11	-37.67	7.80	330.11	0.000	0.000	51.13	0.00	0.0000	0.0000	0.0000	0.00
67	SAGBEND	-236.89	-38.56	7.08	336.95	0.000	0.000	51.05	0.00	0.0000	0.0000	0.0000	0.00
68	SAGBEND	-242.90	-39.27	6.44	343.00	0.000	0.000	50.98	0.00	0.0000	0.0000	0.0000	0.00
69	SAGBEND	-248.92	-39.92	5.80	349.05	0.000	0.000	50.92	0.00	0.0000	0.0000	0.0000	0.00
70	SAGBEND	-254.94	-40.49	5.16	355.10	0.000	0.000	50.87	0.00	0.0000	0.0000	0.0000	0.00
71	SAGBEND	-260.97	-41.00	4.52	361.15	0.000	0.000	50.82	0.00	0.0000	0.0000	0.0000	0.00
72	SAGBEND	-267.00	-41.45	3.87	367.20	0.000	0.000	50.78	0.00	0.0000	0.0000	0.0000	0.00
73	SAGBEND	-273.04	-41.82	3.23	373.24	0.000	0.000	50.74	0.00	0.0000	0.0000	0.0000	0.00
74	SAGBEND	-279.08	-42.13	2.58	379.29	0.000	0.000	50.71	0.00	0.0000	0.0000	0.0000	0.00
75	SAGBEND	-285.12	-42.37	1.94	385.34	0.000	0.000	50.69	0.00	0.0000	0.0000	0.0000	0.00
76	SAGBEND	-291.17	-42.54	1.29	391.39	0.000	0.000	50.67	0.00	0.0000	0.0000	0.0000	0.00
77	SAGBEND	-297.22	-42.64	0.65	397.44	0.001	0.000	50.66	0.00	0.0000	0.0000	0.0000	0.00
78	SEABED	-303.27	-42.67	0.04	403.49	0.297	0.000	50.66	-0.01	0.0000	0.0000	0.0000	0.00
79	SEABED	-309.32	-42.67	0.00	409.54	0.564	0.000	50.66	0.00	0.0000	0.0000	0.0000	0.00
80	SEABED	-315.37	-42.67	0.00	415.59	0.572	0.000	50.66	0.00	0.0000	0.0000	0.0000	0.00
81	SEABED	-321.42	-42.67	0.00	421.64	0.572	0.000	50.66	0.00	0.0000	0.0000	0.0000	0.00
82	SEABED	-327.47	-42.67	0.00	427.69	0.572	0.000	50.66	0.00	0.0000	0.0000	0.0000	0.00
83	SEABED	-333.52	-42.67	0.00	433.74	0.572	0.000	50.66	0.00	0.0000	0.0000	0.0000	0.00
84	SEABED	-339.57	-42.67	0.00	439.79	0.572	0.000	50.66	0.00	0.0000	0.0000	0.0000	0.00
85	SEABED	-345.62	-42.67	0.00	445.84	0.572	0.000	50.66	0.00	0.0000	0.0000	0.0000	0.00
86	SEABED	-351.67	-42.67	0.00	451.89	0.572	0.000	50.66	0.00	0.0000	0.0000	0.0000	0.00
87	SEABED	-357.72	-42.67	0.00	457.94	0.572	0.000	50.66	0.00	0.0000	0.0000	0.0000	0.00
88	SEABED	-363.77	-42.67	0.00	463.99	0.572	0.000	50.66	0.00	0.0000	0.0000	0.0000	0.00
89	SEABED	-369.82	-42.67	0.00	470.04	0.572	0.000	50.66	0.00	0.0000	0.0000	0.0000	0.00
90	SEABED	-375.87	-42.67	0.00	476.09	0.572	0.000	50.66	0.00	0.0000	0.0000	0.0000	0.00
91	SEABED	-381.92	-42.67	0.00	482.14	0.572	0.000	50.66	0.00	0.0000	0.0000	0.0000	0.00
92	SEABED	-387.96	-42.67	0.00	488.19	0.572	0.000	50.66	0.00	0.0000	0.0000	0.0000	0.00
93	SEABED	-394.01	-42.67	0.00	494.24	0.572	0.000	50.66	0.00	0.0000	0.0000	0.0000	0.00
94	SEABED	-400.06	-42.67	0.00	500.29	0.572	0.000	50.66	0.00	0.0000	0.0000	0.0000	0.00
95	SEABED	-406.11	-42.67	0.00	506.34	0.572	0.000	50.66	0.00	0.0000	0.0000	0.0000	0.00
96	SEABED	-412.16	-42.67	0.00	512.39	0.572	0.000	50.66	0.00	0.0000	0.0000	0.0000	0.00
97	SEABED	-418.21	-42.67	0.00	518.44	0.572	0.000	50.66	0.00	0.0000	0.0000	0.0000	0.00
98	SEABED	-424.26	-42.67	0.00	524.49	0.572	0.000	50.66	0.00	0.0000	0.0000	0.0000	0.00
99	SEABED	-430.31	-42.67	0.00	530.54	0.572	0.000	50.66	0.00	0.0000	0.0000	0.0000	0.00
100	SEABED	-436.36	-42.67	0.00	536.59	0.572	0.000	50.66	0.00	0.0000	0.0000	0.0000	0.00
101	SEABED	-442.41	-42.67	0.00	542.64	0.572	0.000	50.66	0.00	0.0000	0.0000	0.0000	0.00
102	SEABED	-448.46	-42.67	0.00	548.69	0.572	0.000	50.66	0.00	0.0000	0.0000	0.0000	0.00
103	SEABED	-454.51	-42.67	0.00	554.74	0.572	0.000	50.66	0.00	0.0000	0.0000	0.0000	0.00
104	SEABED	-460.56	-42.67	0.00	560.79	0.572	0.000	50.66	0.00	0.0000	0.0000	0.0000	0.00

S T A T I C P I P E C O O R D I N A T E S, F O R C E S A N D S T R A I N S

NODE NO.	PIPE SECTION	X COORD (M)	Y COORD (M)	VERT ANGLE (DEG)	PIPE LENGTH (M)	SUPPORT REACTION (KN)	SEPARA -TION (M)	AXIAL TENSION (KN)	BENDING MOMENT (KN-M)	TENSILE STRAIN (PCT)	BENDING STRAIN (PCT)	TOTAL STRAIN (PCT)	PERCNT ALLOW (PCT)

105	SEABED	-466.61	-42.67	0.00	566.83	0.572	0.000	50.66	0.00	0.0000	0.0000	0.0000	0.00
106	SEABED	-472.66	-42.67	0.00	572.88	0.572	0.000	50.66	0.00	0.0000	0.0000	0.0000	0.00
107	SEABED	-478.71	-42.67	0.00	578.93	0.572	0.000	50.66	0.00	0.0000	0.0000	0.0000	0.00
108	SEABED	-484.76	-42.67	0.00	584.98	0.572	0.000	50.66	0.00	0.0000	0.0000	0.0000	0.00
109	SEABED	-490.81	-42.67	0.00	591.03	0.572	0.000	50.66	0.00	0.0000	0.0000	0.0000	0.00
110	SEABED	-496.86	-42.67	0.00	597.08	0.572	0.000	50.66	0.00	0.0000	0.0000	0.0000	0.00
111	SEABED	-502.91	-42.67	0.00	603.13	0.572	0.000	50.66	0.00	0.0000	0.0000	0.0000	0.00
112	SEABED	-508.96	-42.67	0.00	609.18	0.572	0.000	50.66	0.00	0.0000	0.0000	0.0000	0.00
113	SEABED	-515.01	-42.67	0.00	615.23	0.572	0.000	50.66	0.00	0.0000	0.0000	0.0000	0.00
114	SEABED	-521.06	-42.67	0.00	621.28	0.572	0.000	50.66	0.00	0.0000	0.0000	0.0000	0.00
115	SEABED	-527.11	-42.67	0.00	627.33	0.572	0.000	50.66	0.00	0.0000	0.0000	0.0000	0.00
116	SEABED	-533.16	-42.67	0.00	633.38	0.572	0.000	50.66	0.00	0.0000	0.0000	0.0000	0.00
117	SEABED	-539.21	-42.67	0.00	639.43	0.572	0.000	50.66	0.00	0.0000	0.0000	0.0000	0.00
118	SEABED	-545.26	-42.67	0.00	645.48	0.572	0.000	50.66	0.00	0.0000	0.0000	0.0000	0.00
119	SEABED	-551.31	-42.67	0.00	651.53	0.572	0.000	50.66	0.00	0.0000	0.0000	0.0000	0.00
120	SEABED	-557.36	-42.67	0.00	657.58	0.572	0.000	50.66	0.00	0.0000	0.0000	0.0000	0.00
121	SEABED	-563.41	-42.67	0.00	663.63	0.572	0.000	50.66	0.00	0.0000	0.0000	0.0000	0.00
122	SEABED	-569.46	-42.67	0.00	669.68	0.572	0.000	50.66	0.00	0.0000	0.0000	0.0000	0.00
123	SEABED	-575.51	-42.67	0.00	675.73	0.572	0.000	50.66	0.00	0.0000	0.0000	0.0000	0.00
124	SEABED	-581.56	-42.67	0.00	681.78	0.572	0.000	50.66	0.00	0.0000	0.0000	0.0000	0.00
125	SEABED	-587.60	-42.67	0.00	687.83	0.572	0.000	50.66	0.00	0.0000	0.0000	0.0000	0.00
126	SEABED	-593.65	-42.67	0.00	693.88	0.572	0.000	50.66	0.00	0.0000	0.0000	0.0000	0.00
127	SEABED	-599.70	-42.67	0.00	699.93	0.572	0.000	50.66	0.00	0.0000	0.0000	0.0000	0.00
128	SEABED	-605.75	-42.67	0.00	705.98	0.572	0.000	50.66	0.00	0.0000	0.0000	0.0000	0.00
129	SEABED	-611.80	-42.67	0.00	712.03	0.572	0.000	50.66	0.00	0.0000	0.0000	0.0000	0.00
130	SEABED	-617.85	-42.67	0.00	718.08	0.572	0.000	50.66	0.00	0.0000	0.0000	0.0000	0.00
131	SEABED	-623.90	-42.67	-0.01	724.13	0.545	0.000	50.66	0.00	0.0000	0.0000	0.0000	0.00
132	SEABED	-629.86	-42.67	-0.12	730.08	0.000	0.000	50.66	0.00	0.0000	0.0000	0.0000	0.00

S T A T I C P I P E C O O R D I N A T E S, F O R C E S A N D S T R A I N S

NODE NO.	PIPE SECTION	X COORD (M)	Y COORD (M)	VERT ANGLE (DEG)	PIPE LENGTH (M)	SUPPORT REACTION (KN)	SEPARA -TION (M)	AXIAL TENSION (KN)	BENDING MOMENT (KN-M)	TENSILE STRAIN (PCT)	BENDING STRAIN (PCT)	TOTAL STRAIN (PCT)	PERCNT ALLOW (PCT)
1	LAYBARGE	96.31	6.41	1.93	0.00	9.922	0.000	0.00	2.74	0.0000	0.0020	0.0020	0.00
3	LAYBARGE	84.28	6.05	1.58	12.04	24.214	0.000	-0.73	-19.30	0.0000	-0.0144	0.0145	0.00
5	LAYBARGE	73.45	5.73	1.89	22.87	24.168	0.000	-1.39	-29.00	-0.0001	-0.0217	0.0218	0.00
7	TENSIONR	60.10	5.24	2.32	36.23	32.613	0.000	71.42	-24.58	0.0033	-0.0184	0.0217	0.00
9	LAYBARGE	51.10	4.87	2.19	45.24	0.000	0.000	70.68	33.01	0.0033	0.0247	0.0280	0.00
10	LAYBARGE	46.45	4.70	1.87	49.89	8.013	0.000	70.37	15.97	0.0033	0.0119	0.0152	0.00
12	LAYBARGE	35.36	4.31	2.75	60.99	39.479	0.000	69.29	-88.96	0.0032	-0.0665	0.0698	0.00
14	LAYBARGE	25.34	3.64	4.77	71.03	15.036	0.000	68.12	-72.52	0.0032	-0.0542	0.0574	0.00
16	LAYBARGE	19.31	3.08	5.79	77.09	0.000	0.000	67.02	-68.49	0.0031	-0.0512	0.0543	0.00
17	LAYBARGE	8.89	1.76	9.51	87.60	53.181	0.000	63.05	-237.00	0.0029	-0.6407	0.6436	0.00
19	LAYBARGE	4.92	1.01	11.72	91.63	0.000	0.000	62.23	-181.12	0.0029	-0.1391	0.1420	0.00
20	LAYBARGE	3.11	0.62	12.53	93.48	4.879	0.000	61.60	-162.34	0.0029	-0.1219	0.1248	0.00
24	STINGER	-7.51	-2.10	16.02	104.45	17.671	0.000	58.54	-115.85	0.0027	-0.0866	0.0894	0.00
26	STINGER	-16.26	-4.77	17.66	113.60	7.591	0.000	56.13	-39.86	0.0025	-0.0298	0.0324	0.00
29	STINGER	-25.59	-7.77	17.72	123.40	3.304	0.000	53.16	19.55	0.0023	0.0146	0.0171	0.00
31	STINGER	-36.03	-11.03	16.94	134.33	0.000	0.260	49.91	18.88	0.0020	0.0141	0.0164	0.00
33	STINGER	-38.89	-11.90	16.86	137.32	0.000	0.805	49.04	0.00	0.0020	0.0000	0.0023	0.00
35	SAGBEND	-44.86	-12.73	7.90	143.36	0.000	0.000	49.65	0.00	0.0000	0.0000	0.0000	0.00
36	SAGBEND	-50.86	-13.56	7.88	149.41	0.000	0.000	49.65	0.00	0.0000	0.0000	0.0000	0.00
37	SAGBEND	-56.85	-14.39	7.87	155.46	0.000	0.000	49.65	0.00	0.0000	0.0000	0.0000	0.00
38	SAGBEND	-62.84	-15.22	7.85	161.51	0.000	0.000	49.65	0.00	0.0000	0.0000	0.0000	0.00
39	SAGBEND	-68.84	-16.04	7.83	167.56	0.000	0.000	49.65	0.00	0.0000	0.0000	0.0000	0.00
40	SAGBEND	-74.83	-16.86	7.81	173.61	0.000	0.000	49.64	0.00	0.0000	0.0000	0.0000	0.00
41	SAGBEND	-80.82	-17.69	7.79	179.66	0.000	0.000	49.64	0.00	0.0000	0.0000	0.0000	0.00
42	SAGBEND	-86.82	-18.50	7.78	185.71	0.000	0.000	49.64	0.00	0.0000	0.0000	0.0000	0.00
43	SAGBEND	-92.81	-19.32	7.76	191.76	0.000	0.000	49.64	0.00	0.0000	0.0000	0.0000	0.00
44	SAGBEND	-98.81	-20.14	7.74	197.81	0.000	0.000	49.63	0.00	0.0000	0.0000	0.0000	0.00
45	SAGBEND	-104.80	-20.95	7.72	203.86	0.000	0.000	49.63	0.00	0.0000	0.0000	0.0000	0.00
46	SAGBEND	-110.80	-21.76	7.70	209.91	0.000	0.000	49.63	0.00	0.0000	0.0000	0.0000	0.00
47	SAGBEND	-116.79	-22.57	7.68	215.96	0.000	0.000	49.63	0.00	0.0000	0.0000	0.0000	0.00
48	SAGBEND	-122.79	-23.38	7.67	222.01	0.000	0.000	49.63	0.00	0.0000	0.0000	0.0000	0.00
49	SAGBEND	-128.78	-24.19	7.65	228.06	0.000	0.000	49.62	0.00	0.0000	0.0000	0.0000	0.00
50	SAGBEND	-134.78	-24.99	7.63	234.11	0.000	0.000	49.62	0.00	0.0000	0.0000	0.0000	0.00
51	SAGBEND	-140.77	-25.79	7.61	240.16	0.000	0.000	49.62	0.00	0.0000	0.0000	0.0000	0.00
52	SAGBEND	-146.77	-26.59	7.59	246.21	0.000	0.000	49.62	0.00	0.0000	0.0000	0.0000	0.00
53	SAGBEND	-152.77	-27.39	7.58	252.26	0.000	0.000	49.62	0.00	0.0000	0.0000	0.0000	0.00
54	SAGBEND	-158.76	-28.19	7.56	258.31	0.000	0.000	49.61	0.00	0.0000	0.0000	0.0000	0.00
55	SAGBEND	-164.76	-28.99	7.54	264.36	0.000	0.000	49.61	0.00	0.0000	0.0000	0.0000	0.00
56	SAGBEND	-170.76	-29.78	7.52	270.41	0.000	0.000	49.61	0.00	0.0000	0.0000	0.0000	0.00
57	SAGBEND	-176.76	-30.57	7.50	276.46	0.000	0.000	49.61	0.00	0.0000	0.0000	0.0000	0.00
58	SAGBEND	-182.76	-31.36	7.49	282.51	0.000	0.000	49.61	0.00	0.0000	0.0000	0.0000	0.00
59	SAGBEND	-188.75	-32.15	7.47	288.56	0.000	0.000	49.60	0.00	0.0000	0.0000	0.0000	0.00
60	SAGBEND	-194.75	-32.93	7.45	294.61	0.000	0.000	49.60	0.00	0.0000	0.0000	0.0000	0.00

S T A T I C P I P E C O O R D I N A T E S, F O R C E S A N D S T R A I N S

NODE NO.	PIPE SECTION	X COORD (M)	Y COORD (M)	VERT ANGLE (DEG)	PIPE LENGTH (M)	SUPPORT REACTION (KN)	SEPARA -TION (M)	AXIAL TENSION (KN)	BENDING MOMENT (KN-M)	TENSILE STRAIN (PCT)	BENDING STRAIN (PCT)	TOTAL STRAIN (PCT)	PERCNT ALLOW (PCT)
61	SAGBEND	-200.75	-33.71	7.43	300.66	0.000	0.000	49.60	0.00	0.0000	0.0000	0.0000	0.00
62	SAGBEND	-206.75	-34.50	7.41	306.71	0.000	0.000	49.60	0.00	0.0000	0.0000	0.0000	0.00
63	SAGBEND	-212.75	-35.28	7.40	312.76	0.000	0.000	49.60	0.00	0.0000	0.0000	0.0000	0.00
64	SAGBEND	-218.75	-36.05	7.38	318.81	0.000	0.000	49.59	0.00	0.0000	0.0000	0.0000	0.00
65	SAGBEND	-224.75	-36.83	7.36	324.86	0.000	0.000	49.59	0.00	0.0000	0.0000	0.0000	0.00
66	SAGBEND	-230.75	-37.60	7.34	330.91	0.000	0.000	49.59	0.00	0.0000	0.0000	0.0000	0.00
67	SAGBEND	-233.83	-38.00	7.33	334.01	0.000	0.000	49.59	0.00	0.0000	0.0000	0.0000	0.00
68	SAGBEND	-236.91	-38.40	7.32	337.12	0.000	0.000	49.59	0.00	0.0000	0.0000	0.0000	0.00
69	SAGBEND	-242.75	-39.11	6.68	343.01	0.000	0.000	49.52	0.00	0.0000	0.0000	0.0000	0.00
70	SAGBEND	-248.77	-39.78	6.02	349.06	0.000	0.000	49.46	0.00	0.0000	0.0000	0.0000	0.00
71	SAGBEND	-254.79	-40.38	5.37	355.11	0.000	0.000	49.40	0.00	0.0000	0.0000	0.0000	0.00
72	SAGBEND	-260.81	-40.91	4.70	361.16	0.000	0.000	49.35	0.00	0.0000	0.0000	0.0000	0.00
73	SAGBEND	-266.84	-41.38	4.04	367.21	0.000	0.000	49.31	0.00	0.0000	0.0000	0.0000	0.00
74	SAGBEND	-272.88	-41.77	3.38	373.26	0.000	0.000	49.27	0.00	0.0000	0.0000	0.0000	0.00
75	SAGBEND	-278.92	-42.09	2.71	379.30	0.000	0.000	49.24	0.00	0.0000	0.0000	0.0000	0.00
76	SAGBEND	-284.97	-42.34	2.05	385.35	0.000	0.000	49.21	0.00	0.0000	0.0000	0.0000	0.00
77	SAGBEND	-291.01	-42.52	1.38	391.40	0.000	0.000	49.20	0.00	0.0000	0.0000	0.0000	0.00
78	SAGBEND	-297.06	-42.63	0.72	397.45	0.000	0.000	49.19	0.00	0.0000	0.0000	0.0000	0.00
79	SEABED	-303.11	-42.67	0.06	403.50	0.255	0.000	49.18	0.00	0.0000	0.0000	0.0000	0.00
80	SEABED	-309.16	-42.67	0.00	409.55	0.561	0.000	49.18	0.00	0.0000	0.0000	0.0000	0.00
81	SEABED	-315.21	-42.67	0.00	415.60	0.572	0.000	49.18	0.00	0.0000	0.0000	0.0000	0.00
82	SEABED	-321.26	-42.67	0.00	421.65	0.572	0.000	49.18	0.00	0.0000	0.0000	0.0000	0.00
83	SEABED	-327.31	-42.67	0.00	427.70	0.572	0.000	49.18	0.00	0.0000	0.0000	0.0000	0.00
84	SEABED	-333.36	-42.67	0.00	433.75	0.572	0.000	49.18	0.00	0.0000	0.0000	0.0000	0.00
85	SEABED	-339.41	-42.67	0.00	439.80	0.572	0.000	49.18	0.00	0.0000	0.0000	0.0000	0.00
86	SEABED	-345.46	-42.67	0.00	445.85	0.572	0.000	49.18	0.00	0.0000	0.0000	0.0000	0.00
87	SEABED	-351.51	-42.67	0.00	451.90	0.572	0.000	49.18	0.00	0.0000	0.0000	0.0000	0.00
88	SEABED	-357.56	-42.67	0.00	457.95	0.572	0.000	49.18	0.00	0.0000	0.0000	0.0000	0.00
89	SEABED	-363.61	-42.67	0.00	464.00	0.572	0.000	49.18	0.00	0.0000	0.0000	0.0000	0.00
90	SEABED	-369.66	-42.67	0.00	470.05	0.572	0.000	49.18	0.00	0.0000	0.0000	0.0000	0.00
91	SEABED	-375.71	-42.67	0.00	476.10	0.572	0.000	49.18	0.00	0.0000	0.0000	0.0000	0.00
92	SEABED	-381.76	-42.67	0.00	482.15	0.572	0.000	49.18	0.00	0.0000	0.0000	0.0000	0.00
93	SEABED	-387.81	-42.67	0.00	488.20	0.572	0.000	49.18	0.00	0.0000	0.0000	0.0000	0.00
94	SEABED	-393.86	-42.67	0.00	494.25	0.572	0.000	49.18	0.00	0.0000	0.0000	0.0000	0.00
95	SEABED	-399.91	-42.67	0.00	500.30	0.572	0.000	49.18	0.00	0.0000	0.0000	0.0000	0.00
96	SEABED	-405.96	-42.67	0.00	506.35	0.572	0.000	49.18	0.00	0.0000	0.0000	0.0000	0.00
97	SEABED	-412.01	-42.67	0.00	512.40	0.572	0.000	49.18	0.00	0.0000	0.0000	0.0000	0.00
98	SEABED	-418.06	-42.67	0.00	518.45	0.572	0.000	49.18	0.00	0.0000	0.0000	0.0000	0.00
99	SEABED	-424.11	-42.67	0.00	524.50	0.572	0.000	49.18	0.00	0.0000	0.0000	0.0000	0.00
100	SEABED	-430.15	-42.67	0.00	530.55	0.572	0.000	49.18	0.00	0.0000	0.0000	0.0000	0.00
101	SEABED	-436.20	-42.67	0.00	536.60	0.572	0.000	49.18	0.00	0.0000	0.0000	0.0000	0.00
102	SEABED	-442.25	-42.67	0.00	542.65	0.572	0.000	49.18	0.00	0.0000	0.0000	0.0000	0.00
103	SEABED	-448.30	-42.67	0.00	548.70	0.572	0.000	49.18	0.00	0.0000	0.0000	0.0000	0.00
104	SEABED	-454.35	-42.67	0.00	554.74	0.572	0.000	49.18	0.00	0.0000	0.0000	0.0000	0.00

S T A T I C P I P E C O O R D I N A T E S, F O R C E S A N D S T R A I N S

NODE NO.	PIPE SECTION	X COORD (M)	Y COORD (M)	VERT ANGLE (DEG)	PIPE LENGTH (M)	SUPPORT REACTION (KN)	SEPARA -TION (M)	AXIAL TENSION (KN)	BENDING MOMENT (KN-M)	TENSILE STRAIN (PCT)	BENDING STRAIN (PCT)	TOTAL STRAIN (PCT)	PERCNT ALLOW (PCT)
105	SEABED	-460.40	-42.67	0.00	560.79	0.572	0.000	49.18	0.00	0.0000	0.0000	0.0000	0.00
106	SEABED	-466.45	-42.67	0.00	566.84	0.572	0.000	49.18	0.00	0.0000	0.0000	0.0000	0.00
107	SEABED	-472.50	-42.67	0.00	572.89	0.572	0.000	49.18	0.00	0.0000	0.0000	0.0000	0.00
108	SEABED	-478.55	-42.67	0.00	578.94	0.572	0.000	49.18	0.00	0.0000	0.0000	0.0000	0.00
109	SEABED	-484.60	-42.67	0.00	584.99	0.572	0.000	49.18	0.00	0.0000	0.0000	0.0000	0.00
110	SEABED	-490.65	-42.67	0.00	591.04	0.572	0.000	49.18	0.00	0.0000	0.0000	0.0000	0.00
111	SEABED	-496.70	-42.67	0.00	597.09	0.572	0.000	49.18	0.00	0.0000	0.0000	0.0000	0.00
112	SEABED	-502.75	-42.67	0.00	603.14	0.572	0.000	49.18	0.00	0.0000	0.0000	0.0000	0.00
113	SEABED	-508.80	-42.67	0.00	609.19	0.572	0.000	49.18	0.00	0.0000	0.0000	0.0000	0.00
114	SEABED	-514.85	-42.67	0.00	615.24	0.572	0.000	49.18	0.00	0.0000	0.0000	0.0000	0.00
115	SEABED	-520.90	-42.67	0.00	621.29	0.572	0.000	49.18	0.00	0.0000	0.0000	0.0000	0.00
116	SEABED	-526.95	-42.67	0.00	627.34	0.572	0.000	49.18	0.00	0.0000	0.0000	0.0000	0.00
117	SEABED	-533.00	-42.67	0.00	633.39	0.572	0.000	49.18	0.00	0.0000	0.0000	0.0000	0.00

118	SEABED	-539.05	-42.67	0.00	639.44	0.572	0.000	49.18	0.00	0.0000	0.0000	0.0000	0.00
119	SEABED	-545.10	-42.67	0.00	645.49	0.572	0.000	49.18	0.00	0.0000	0.0000	0.0000	0.00
120	SEABED	-551.15	-42.67	0.00	651.54	0.572	0.000	49.18	0.00	0.0000	0.0000	0.0000	0.00
121	SEABED	-557.20	-42.67	0.00	657.59	0.572	0.000	49.18	0.00	0.0000	0.0000	0.0000	0.00
122	SEABED	-563.25	-42.67	0.00	663.64	0.572	0.000	49.18	0.00	0.0000	0.0000	0.0000	0.00
123	SEABED	-569.30	-42.67	0.00	669.69	0.572	0.000	49.18	0.00	0.0000	0.0000	0.0000	0.00
124	SEABED	-575.35	-42.67	0.00	675.74	0.572	0.000	49.18	0.00	0.0000	0.0000	0.0000	0.00
125	SEABED	-581.40	-42.67	0.00	681.79	0.572	0.000	49.18	0.00	0.0000	0.0000	0.0000	0.00
126	SEABED	-587.45	-42.67	0.00	687.84	0.572	0.000	49.18	0.00	0.0000	0.0000	0.0000	0.00
127	SEABED	-593.50	-42.67	0.00	693.89	0.572	0.000	49.18	0.00	0.0000	0.0000	0.0000	0.00
128	SEABED	-599.55	-42.67	0.00	699.94	0.572	0.000	49.18	0.00	0.0000	0.0000	0.0000	0.00
129	SEABED	-605.60	-42.67	0.00	705.99	0.572	0.000	49.18	0.00	0.0000	0.0000	0.0000	0.00
130	SEABED	-611.64	-42.67	0.00	712.04	0.572	0.000	49.18	0.00	0.0000	0.0000	0.0000	0.00
131	SEABED	-617.69	-42.67	0.00	718.09	0.572	0.000	49.18	0.00	0.0000	0.0000	0.0000	0.00
132	SEABED	-623.74	-42.67	0.00	724.14	0.572	0.000	49.18	0.00	0.0000	0.0000	0.0000	0.00
133	SEABED	-629.79	-42.67	0.00	730.19	0.446	0.000	49.18	0.00	0.0000	0.0000	0.0000	0.00
134	SEABED	-633.25	-42.67	-0.01	733.64	0.289	0.000	49.18	0.00	0.0000	0.0000	0.0000	0.00
135	SEABED	-636.70	-42.67	-0.14	737.09	0.000	0.000	49.18	0.00	0.0000	0.0000	0.0000	0.00

S T A T I C P I P E C O O R D I N A T E S, F O R C E S A N D S T R A I N S

NODE NO.	PIPE SECTION	X COORD (M)	Y COORD (M)	VERT ANGLE (DEG)	PIPE LENGTH (M)	SUPPORT REACTION (KN)	SEPARA -TION (M)	AXIAL TENSION (KN)	BENDING MOMENT (KN-M)	TENSILE STRAIN (PCT)	BENDING STRAIN (PCT)	TOTAL STRAIN (PCT)	PERCNT ALLOW (PCT)
1	LAYBARGE	96.31	6.41	1.93	0.00	9.922	0.000	0.00	2.74	0.0000	0.0020	0.0020	0.00
3	LAYBARGE	84.28	6.05	1.58	12.04	24.213	0.000	-0.73	-19.30	0.0000	-0.0144	0.0145	0.00
5	LAYBARGE	73.45	5.73	1.89	22.87	24.170	0.000	-1.39	-29.00	-0.0001	-0.0217	0.0218	0.00
7	TENSIONR	60.10	5.24	2.32	36.23	32.611	0.000	75.51	-24.57	0.0035	-0.0184	0.0219	0.00
9	LAYBARGE	51.10	4.87	2.19	45.24	0.000	0.000	74.78	32.96	0.0035	0.0247	0.0281	0.00
10	LAYBARGE	46.45	4.70	1.87	49.89	7.965	0.000	74.47	16.01	0.0035	0.0120	0.0154	0.00
12	LAYBARGE	35.36	4.31	2.75	60.99	39.687	0.000	73.39	-89.03	0.0034	-0.0666	0.0700	0.00
14	LAYBARGE	25.34	3.64	4.77	71.03	15.022	0.000	72.22	-72.23	0.0034	-0.0540	0.0574	0.00
16	LAYBARGE	19.31	3.08	5.79	77.09	0.000	0.000	71.12	-68.57	0.0033	-0.0513	0.0546	0.00
17	LAYBARGE	8.89	1.76	9.53	87.60	56.170	0.000	67.12	-238.46	0.0031	-0.6964	0.6995	0.00
19	LAYBARGE	4.92	1.01	11.71	91.63	0.000	0.000	66.39	-173.24	0.0031	-0.1312	0.1343	0.00
20	LAYBARGE	3.11	0.62	12.47	93.48	1.918	0.000	65.78	-149.98	0.0031	-0.1123	0.1153	0.00
24	STINGER	-7.52	-2.06	15.68	104.45	17.812	0.000	62.71	-108.65	0.0029	-0.0813	0.0842	0.00
26	STINGER	-16.28	-4.67	17.19	113.59	7.743	0.000	60.34	-35.72	0.0027	-0.0267	0.0295	0.00
29	STINGER	-25.64	-7.59	17.17	123.39	3.189	0.000	57.45	22.18	0.0025	0.0166	0.0193	0.00
31	STINGER	-36.11	-10.74	16.34	134.32	0.000	0.253	54.30	19.37	0.0022	0.0145	0.0170	0.00
33	STINGER	-38.98	-11.58	16.26	137.31	0.000	0.797	53.47	0.00	0.0022	0.0000	0.0025	0.00
35	SAGBEND	-44.96	-12.40	7.86	143.36	0.000	0.000	54.05	0.00	0.0000	0.0000	0.0000	0.00
36	SAGBEND	-50.95	-13.23	7.84	149.41	0.000	0.000	54.05	0.00	0.0000	0.0000	0.0000	0.00
37	SAGBEND	-56.95	-14.06	7.83	155.46	0.000	0.000	54.05	0.00	0.0000	0.0000	0.0000	0.00
38	SAGBEND	-62.94	-14.88	7.81	161.51	0.000	0.000	54.04	0.00	0.0000	0.0000	0.0000	0.00
39	SAGBEND	-68.94	-15.70	7.79	167.56	0.000	0.000	54.04	0.00	0.0000	0.0000	0.0000	0.00
40	SAGBEND	-74.93	-16.52	7.78	173.61	0.000	0.000	54.04	0.00	0.0000	0.0000	0.0000	0.00
41	SAGBEND	-80.92	-17.34	7.76	179.66	0.000	0.000	54.04	0.00	0.0000	0.0000	0.0000	0.00
42	SAGBEND	-86.92	-18.15	7.74	185.71	0.000	0.000	54.03	0.00	0.0000	0.0000	0.0000	0.00
43	SAGBEND	-92.91	-18.97	7.73	191.76	0.000	0.000	54.03	0.00	0.0000	0.0000	0.0000	0.00
44	SAGBEND	-98.91	-19.78	7.71	197.81	0.000	0.000	54.03	0.00	0.0000	0.0000	0.0000	0.00
45	SAGBEND	-104.90	-20.59	7.69	203.86	0.000	0.000	54.03	0.00	0.0000	0.0000	0.0000	0.00
46	SAGBEND	-110.90	-21.40	7.68	209.91	0.000	0.000	54.03	0.00	0.0000	0.0000	0.0000	0.00
47	SAGBEND	-116.89	-22.21	7.66	215.96	0.000	0.000	54.02	0.00	0.0000	0.0000	0.0000	0.00
48	SAGBEND	-122.89	-23.01	7.64	222.01	0.000	0.000	54.02	0.00	0.0000	0.0000	0.0000	0.00
49	SAGBEND	-128.89	-23.82	7.63	228.06	0.000	0.000	54.02	0.00	0.0000	0.0000	0.0000	0.00
50	SAGBEND	-134.88	-24.62	7.61	234.11	0.000	0.000	54.02	0.00	0.0000	0.0000	0.0000	0.00
51	SAGBEND	-140.88	-25.42	7.59	240.16	0.000	0.000	54.02	0.00	0.0000	0.0000	0.0000	0.00
52	SAGBEND	-146.88	-26.22	7.58	246.21	0.000	0.000	54.01	0.00	0.0000	0.0000	0.0000	0.00
53	SAGBEND	-152.87	-27.01	7.56	252.26	0.000	0.000	54.01	0.00	0.0000	0.0000	0.0000	0.00
54	SAGBEND	-158.87	-27.81	7.54	258.31	0.000	0.000	54.01	0.00	0.0000	0.0000	0.0000	0.00
55	SAGBEND	-164.87	-28.60	7.53	264.36	0.000	0.000	54.01	0.00	0.0000	0.0000	0.0000	0.00
56	SAGBEND	-170.87	-29.39	7.51	270.41	0.000	0.000	54.01	0.00	0.0000	0.0000	0.0000	0.00
57	SAGBEND	-176.86	-30.18	7.49	276.46	0.000	0.000	54.00	0.00	0.0000	0.0000	0.0000	0.00
58	SAGBEND	-182.86	-30.97	7.48	282.51	0.000	0.000	54.00	0.00	0.0000	0.0000	0.0000	0.00
59	SAGBEND	-188.86	-31.76	7.46	288.56	0.000	0.000	54.00	0.00	0.0000	0.0000	0.0000	0.00
60	SAGBEND	-194.86	-32.54	7.44	294.61	0.000	0.000	54.00	0.00	0.0000	0.0000	0.0000	0.00

S T A T I C P I P E C O O R D I N A T E S, F O R C E S A N D S T R A I N S

NODE NO.	PIPE SECTION	X COORD (M)	Y COORD (M)	VERT ANGLE (DEG)	PIPE LENGTH (M)	SUPPORT REACTION (KN)	SEPARA -TION (M)	AXIAL TENSION (KN)	BENDING MOMENT (KN-M)	TENSILE STRAIN (PCT)	BENDING STRAIN (PCT)	TOTAL STRAIN (PCT)	PERCNT ALLOW (PCT)
61	SAGBEND	-200.86	-33.33	7.43	300.66	0.000	0.000	54.00	0.00	0.0000	0.0000	0.0000	0.00
62	SAGBEND	-206.86	-34.11	7.41	306.71	0.000	0.000	53.99	0.00	0.0000	0.0000	0.0000	0.00
63	SAGBEND	-212.86	-34.89	7.39	312.76	0.000	0.000	53.99	0.00	0.0000	0.0000	0.0000	0.00
64	SAGBEND	-218.86	-35.67	7.38	318.81	0.000	0.000	53.99	0.00	0.0000	0.0000	0.0000	0.00
65	SAGBEND	-224.86	-36.44	7.36	324.86	0.000	0.000	53.99	0.00	0.0000	0.0000	0.0000	0.00
66	SAGBEND	-230.86	-37.22	7.34	330.91	0.000	0.000	53.99	0.00	0.0000	0.0000	0.0000	0.00
67	SAGBEND	-233.93	-37.61	7.34	334.01	0.000	0.000	53.98	0.00	0.0000	0.0000	0.0000	0.00
68	SAGBEND	-237.01	-38.01	7.33	337.11	0.000	0.000	53.98	0.00	0.0000	0.0000	0.0000	0.00
69	SAGBEND	-242.86	-38.73	6.74	343.01	0.000	0.000	53.91	0.00	0.0000	0.0000	0.0000	0.00
70	SAGBEND	-248.87	-39.41	6.14	349.06	0.000	0.000	53.85	0.00	0.0000	0.0000	0.0000	0.00
71	SAGBEND	-254.89	-40.02	5.53	355.11	0.000	0.000	53.79	0.00	0.0000	0.0000	0.0000	0.00
72	SAGBEND	-260.91	-40.57	4.92	361.16	0.000	0.000	53.74	0.00	0.0000	0.0000	0.0000	0.00
73	SAGBEND	-266.94	-41.06	4.32	367.20	0.000	0.000	53.69	0.00	0.0000	0.0000	0.0000	0.00
74	SAGBEND	-272.98	-41.49	3.71	373.25	0.000	0.000	53.65	0.00	0.0000	0.0000	0.0000	0.00
75	SAGBEND	-279.02	-41.84	3.10	379.30	0.000	0.000	53.62	0.00	0.0000	0.0000	0.0000	0.00
76	SAGBEND	-285.06	-42.14	2.49	385.35	0.000	0.000	53.59	0.00	0.0000	0.0000	0.0000	0.00
77	SAGBEND	-291.11	-42.37	1.87	391.40	0.000	0.000	53.57	0.00	0.0000	0.0000	0.0000	0.00
78	SAGBEND	-297.15	-42.53	1.26	397.45	0.000	0.000	53.56	0.00	0.0000	0.0000	0.0000	0.00
79	SAGBEND	-303.20	-42.64	0.65	403.50	0.000	0.000	53.55	0.00	0.0000	0.0000	0.0000	0.00
80	SEABED	-309.25	-42.67	0.05	409.55	0.261	0.000	53.54	0.00	0.0000	0.0000	0.0000	0.00
81	SEABED	-315.30	-42.67	0.00	415.60	0.561	0.000	53.54	0.00	0.0000	0.0000	0.0000	0.00
82	SEABED	-321.35	-42.67	0.00	421.65	0.572	0.000	53.54	0.00	0.0000	0.0000	0.0000	0.00
83	SEABED	-327.40	-42.67	0.00	427.70	0.572	0.000	53.54	0.00	0.0000	0.0000	0.0000	0.00
84	SEABED	-333.45	-42.67	0.00	433.75	0.572	0.000	53.54	0.00	0.0000	0.0000	0.0000	0.00
85	SEABED	-339.50	-42.67	0.00	439.80	0.572	0.000	53.54	0.00	0.0000	0.0000	0.0000	0.00
86	SEABED	-345.55	-42.67	0.00	445.85	0.572	0.000	53.54	0.00	0.0000	0.0000	0.0000	0.00
87	SEABED	-351.60	-42.67	0.00	451.90	0.572	0.000	53.54	0.00	0.0000	0.0000	0.0000	0.00
88	SEABED	-357.65	-42.67	0.00	457.95	0.572	0.000	53.54	0.00	0.0000	0.0000	0.0000	0.00
89	SEABED	-363.70	-42.67	0.00	464.00	0.572	0.000	53.54	0.00	0.0000	0.0000	0.0000	0.00
90	SEABED	-369.75	-42.67	0.00	470.05	0.572	0.000	53.54	0.00	0.0000	0.0000	0.0000	0.00
91	SEABED	-375.80	-42.67	0.00	476.10	0.572	0.000	53.54	0.00	0.0000	0.0000	0.0000	0.00
92	SEABED	-381.85	-42.67	0.00	482.15	0.572	0.000	53.54	0.00	0.0000	0.0000	0.0000	0.00
93	SEABED	-387.90	-42.67	0.00	488.20	0.572	0.000	53.54	0.00	0.0000	0.0000	0.0000	0.00
94	SEABED	-393.95	-42.67	0.00	494.25	0.572	0.000	53.54	0.00	0.0000	0.0000	0.0000	0.00
95	SEABED	-400.00	-42.67	0.00	500.30	0.572	0.000	53.54	0.00	0.0000	0.0000	0.0000	0.00
96	SEABED	-406.05	-42.67	0.00	506.35	0.572	0.000	53.54	0.00	0.0000	0.0000	0.0000	0.00
97	SEABED	-412.10	-42.67	0.00	512.40	0.572	0.000	53.54	0.00	0.0000	0.0000	0.0000	0.00
98	SEABED	-418.15	-42.67	0.00	518.45	0.572	0.000	53.54	0.00	0.0000	0.0000	0.0000	0.00
99	SEABED	-424.19	-42.67	0.00	524.50	0.572	0.000	53.54	0.00	0.0000	0.0000	0.0000	0.00
100	SEABED	-430.24	-42.67	0.00	530.55	0.572	0.000	53.54	0.00	0.0000	0.0000	0.0000	0.00
101	SEABED	-436.29	-42.67	0.00	536.60	0.572	0.000	53.54	0.00	0.0000	0.0000	0.0000	0.00
102	SEABED	-442.34	-42.67	0.00	542.65	0.572	0.000	53.54	0.00	0.0000	0.0000	0.0000	0.00
103	SEABED	-448.39	-42.67	0.00	548.69	0.572	0.000	53.54	0.00	0.0000	0.0000	0.0000	0.00
104	SEABED	-454.44	-42.67	0.00	554.74	0.572	0.000	53.54	0.00	0.0000	0.0000	0.0000	0.00

S T A T I C P I P E C O O R D I N A T E S, F O R C E S A N D S T R A I N S

NODE NO.	PIPE SECTION	X COORD (M)	Y COORD (M)	VERT ANGLE (DEG)	PIPE LENGTH (M)	SUPPORT REACTION (KN)	SEPARA -TION (M)	AXIAL TENSION (KN)	BENDING MOMENT (KN-M)	TENSILE STRAIN (PCT)	BENDING STRAIN (PCT)	TOTAL STRAIN (PCT)	PERCNT ALLOW (PCT)
105	SEABED	-460.49	-42.67	0.00	560.79	0.572	0.000	53.54	0.00	0.0000	0.0000	0.0000	0.00
106	SEABED	-466.54	-42.67	0.00	566.84	0.572	0.000	53.54	0.00	0.0000	0.0000	0.0000	0.00
107	SEABED	-472.59	-42.67	0.00	572.89	0.572	0.000	53.54	0.00	0.0000	0.0000	0.0000	0.00
108	SEABED	-478.64	-42.67	0.00	578.94	0.572	0.000	53.54	0.00	0.0000	0.0000	0.0000	0.00
109	SEABED	-484.69	-42.67	0.00	584.99	0.572	0.000	53.54	0.00	0.0000	0.0000	0.0000	0.00
110	SEABED	-490.74	-42.67	0.00	591.04	0.572	0.000	53.54	0.00	0.0000	0.0000	0.0000	0.00
111	SEABED	-496.79	-42.67	0.00	597.09	0.572	0.000	53.54	0.00	0.0000	0.0000	0.0000	0.00
112	SEABED	-502.84	-42.67	0.00	603.14	0.572	0.000	53.54	0.00	0.0000	0.0000	0.0000	0.00
113	SEABED	-508.89	-42.67	0.00	609.19	0.572	0.000	53.54	0.00	0.0000	0.0000	0.0000	0.00
114	SEABED	-514.94	-42.67	0.00	615.24	0.572	0.000	53.54	0.00	0.0000	0.0000	0.0000	0.00
115	SEABED	-520.99	-42.67	0.00	621.29	0.572	0.000	53.54	0.00	0.0000	0.0000	0.0000	0.00
116	SEABED	-527.04	-42.67	0.00	627.34	0.572	0.000	53.54	0.00	0.0000	0.0000	0.0000	0.00
117	SEABED	-533.09	-42.67	0.00	633.39	0.572	0.000	53.54	0.00	0.0000	0.0000	0.0000	0.00
118	SEABED	-539.14	-42.67	0.00	639.44	0.572	0.000	53.54	0.00	0.0000	0.0000	0.0000	0.00
119	SEABED	-545.19	-42.67	0.00	645.49	0.572	0.000	53.54	0.00	0.0000	0.0000	0.0000	0.00
120	SEABED	-551.24	-42.67	0.00	651.54	0.572	0.000	53.54	0.00	0.0000	0.0000	0.0000	0.00
121	SEABED	-557.29	-42.67	0.00	657.59	0.572	0.000	53.54	0.00	0.0000	0.0000	0.0000	0.00
122	SEABED	-563.34	-42.67	0.00	663.64	0.572	0.000	53.54	0.00	0.0000	0.0000	0.0000	0.00
123	SEABED	-569.39	-42.67	0.00	669.69	0.572	0.000	53.54	0.00	0.0000	0.0000	0.0000	0.00
124	SEABED	-575.44	-42.67	0.00	675.74	0.572	0.000	53.54	0.00	0.0000	0.0000	0.0000	0.00
125	SEABED	-581.49	-42.67	0.00	681.79	0.572	0.000	53.54	0.00	0.0000	0.0000	0.0000	0.00
126	SEABED	-587.54	-42.67	0.00	687.84	0.572	0.000	53.54	0.00	0.0000	0.0000	0.0000	0.00
127	SEABED	-593.59	-42.67	0.00	693.89	0.572	0.000	53.54	0.00	0.0000	0.0000	0.0000	0.00

128	SEABED	-599.64	-42.67	0.00	699.94	0.572	0.000	53.54	0.00	0.0000	0.0000	0.0000	0.00
129	SEABED	-605.69	-42.67	0.00	705.99	0.572	0.000	53.54	0.00	0.0000	0.0000	0.0000	0.00
130	SEABED	-611.73	-42.67	0.00	712.04	0.572	0.000	53.54	0.00	0.0000	0.0000	0.0000	0.00
131	SEABED	-617.78	-42.67	0.00	718.09	0.572	0.000	53.54	0.00	0.0000	0.0000	0.0000	0.00
132	SEABED	-623.83	-42.67	0.00	724.14	0.572	0.000	53.54	0.00	0.0000	0.0000	0.0000	0.00
133	SEABED	-629.88	-42.67	0.00	730.19	0.446	0.000	53.54	0.00	0.0000	0.0000	0.0000	0.00
134	SEABED	-633.34	-42.67	-0.01	733.64	0.286	0.000	53.54	0.00	0.0000	0.0000	0.0000	0.00
135	SEABED	-636.79	-42.67	-0.13	737.09	0.000	0.000	53.54	0.00	0.0000	0.0000	0.0000	0.00

S T A T I C P I P E C O O R D I N A T E S, F O R C E S A N D S T R A I N S

NODE NO.	PIPE SECTION	X COORD (M)	Y COORD (M)	VERT ANGLE (DEG)	PIPE LENGTH (M)	SUPPORT REACTION (KN)	SEPARA -TION (M)	AXIAL TENSION (KN)	BENDING MOMENT (KN-M)	TENSILE STRAIN (PCT)	BENDING STRAIN (PCT)	TOTAL STRAIN (PCT)	PERCNT ALLOW (PCT)
1	LAYBARGE	96.31	6.41	1.93	0.00	9.922	0.000	0.00	2.74	0.0000	0.0020	0.0020	0.00
3	LAYBARGE	84.28	6.05	1.58	12.04	24.212	0.000	-0.73	-19.30	0.0000	-0.0144	0.0145	0.00
5	LAYBARGE	73.45	5.73	1.90	22.87	24.174	0.000	-1.39	-29.01	-0.0001	-0.0217	0.0218	0.00
7	TENSIONR	60.10	5.24	2.32	36.23	32.599	0.000	75.52	-24.55	0.0035	-0.0184	0.0219	0.00
9	LAYBARGE	51.10	4.87	2.19	45.24	0.000	0.000	74.78	32.91	0.0035	0.0246	0.0281	0.00
10	LAYBARGE	46.45	4.70	1.87	49.89	8.023	0.000	74.47	15.92	0.0035	0.0119	0.0154	0.00
12	LAYBARGE	35.36	4.31	2.74	60.99	39.420	0.000	73.39	-88.79	0.0034	-0.0664	0.0698	0.00
14	LAYBARGE	25.34	3.64	4.78	71.03	15.690	0.000	72.21	-73.80	0.0034	-0.0552	0.0586	0.00
16	LAYBARGE	19.31	3.08	5.81	77.09	0.000	0.000	71.12	-67.75	0.0033	-0.0507	0.0540	0.00
17	LAYBARGE	8.89	1.76	9.47	87.60	48.317	0.000	67.19	-234.95	0.0031	-0.5719	0.5750	0.00
19	LAYBARGE	4.92	1.01	11.74	91.63	0.000	0.000	66.20	-197.24	0.0031	-0.1644	0.1674	0.00
20	LAYBARGE	3.11	0.62	12.65	93.48	11.231	0.000	65.50	-187.62	0.0030	-0.1472	0.1502	0.00
24	STINGER	-7.54	-2.20	16.72	104.50	19.170	0.000	62.45	-132.70	0.0028	-0.0993	0.1022	0.00
26	STINGER	-16.24	-5.00	18.58	113.65	6.664	0.000	60.01	-41.43	0.0027	-0.0310	0.0338	0.00
29	STINGER	-25.55	-8.15	18.60	123.47	3.488	0.000	56.89	24.54	0.0024	0.0184	0.0210	0.00
31	STINGER	-35.93	-11.54	17.52	134.39	0.000	0.302	53.48	35.47	0.0022	0.0265	0.0290	0.00
33	STINGER	-38.77	-12.43	17.30	137.36	0.000	0.871	52.62	20.74	0.0021	0.0155	0.0180	0.00
35	SAGBEND	-41.39	-13.24	17.23	140.11	0.000	0.000	51.80	0.00	0.0020	0.0000	0.0025	0.00
36	SAGBEND	-44.61	-13.67	7.54	143.36	0.000	0.000	52.56	0.00	0.0000	0.0000	0.0000	0.00
37	SAGBEND	-50.60	-14.46	7.53	149.41	0.000	0.000	52.55	0.00	0.0000	0.0000	0.0000	0.00
38	SAGBEND	-56.60	-15.26	7.51	155.46	0.000	0.000	52.55	0.00	0.0000	0.0000	0.0000	0.00
39	SAGBEND	-62.60	-16.04	7.49	161.51	0.000	0.000	52.55	0.00	0.0000	0.0000	0.0000	0.00
40	SAGBEND	-68.60	-16.83	7.47	167.56	0.000	0.000	52.55	0.00	0.0000	0.0000	0.0000	0.00
41	SAGBEND	-74.60	-17.62	7.46	173.61	0.000	0.000	52.55	0.00	0.0000	0.0000	0.0000	0.00
42	SAGBEND	-80.59	-18.40	7.44	179.66	0.000	0.000	52.54	0.00	0.0000	0.0000	0.0000	0.00
43	SAGBEND	-86.59	-19.19	7.42	185.71	0.000	0.000	52.54	0.00	0.0000	0.0000	0.0000	0.00
44	SAGBEND	-92.59	-19.97	7.41	191.76	0.000	0.000	52.54	0.00	0.0000	0.0000	0.0000	0.00
45	SAGBEND	-98.59	-20.75	7.39	197.81	0.000	0.000	52.54	0.00	0.0000	0.0000	0.0000	0.00
46	SAGBEND	-104.59	-21.52	7.37	203.86	0.000	0.000	52.54	0.00	0.0000	0.0000	0.0000	0.00
47	SAGBEND	-110.59	-22.30	7.35	209.91	0.000	0.000	52.53	0.00	0.0000	0.0000	0.0000	0.00
48	SAGBEND	-116.59	-23.07	7.34	215.96	0.000	0.000	52.53	0.00	0.0000	0.0000	0.0000	0.00
49	SAGBEND	-122.59	-23.84	7.32	222.01	0.000	0.000	52.53	0.00	0.0000	0.0000	0.0000	0.00
50	SAGBEND	-128.59	-24.61	7.30	228.06	0.000	0.000	52.53	0.00	0.0000	0.0000	0.0000	0.00
51	SAGBEND	-134.59	-25.38	7.29	234.11	0.000	0.000	52.53	0.00	0.0000	0.0000	0.0000	0.00
52	SAGBEND	-140.59	-26.15	7.27	240.16	0.000	0.000	52.52	0.00	0.0000	0.0000	0.0000	0.00
53	SAGBEND	-146.60	-26.91	7.25	246.21	0.000	0.000	52.52	0.00	0.0000	0.0000	0.0000	0.00
54	SAGBEND	-152.60	-27.67	7.24	252.26	0.000	0.000	52.52	0.00	0.0000	0.0000	0.0000	0.00
55	SAGBEND	-158.60	-28.44	7.22	258.31	0.000	0.000	52.52	0.00	0.0000	0.0000	0.0000	0.00
56	SAGBEND	-164.60	-29.19	7.20	264.36	0.000	0.000	52.52	0.00	0.0000	0.0000	0.0000	0.00
57	SAGBEND	-170.60	-29.95	7.18	270.41	0.000	0.000	52.51	0.00	0.0000	0.0000	0.0000	0.00
58	SAGBEND	-176.61	-30.71	7.17	276.46	0.000	0.000	52.51	0.00	0.0000	0.0000	0.0000	0.00
59	SAGBEND	-182.61	-31.46	7.15	282.51	0.000	0.000	52.51	0.00	0.0000	0.0000	0.0000	0.00
60	SAGBEND	-188.61	-32.21	7.13	288.56	0.000	0.000	52.51	0.00	0.0000	0.0000	0.0000	0.00

S T A T I C P I P E C O O R D I N A T E S, F O R C E S A N D S T R A I N S

NODE NO.	PIPE SECTION	X COORD (M)	Y COORD (M)	VERT ANGLE (DEG)	PIPE LENGTH (M)	SUPPORT REACTION (KN)	SEPARA -TION (M)	AXIAL TENSION (KN)	BENDING MOMENT (KN-M)	TENSILE STRAIN (PCT)	BENDING STRAIN (PCT)	TOTAL STRAIN (PCT)	PERCNT ALLOW (PCT)
61	SAGBEND	-194.61	-32.96	7.12	294.60	0.000	0.000	52.51	0.00	0.0000	0.0000	0.0000	0.00
62	SAGBEND	-200.62	-33.71	7.10	300.65	0.000	0.000	52.50	0.00	0.0000	0.0000	0.0000	0.00
63	SAGBEND	-206.62	-34.46	7.08	306.70	0.000	0.000	52.50	0.00	0.0000	0.0000	0.0000	0.00
64	SAGBEND	-212.62	-35.20	7.06	312.75	0.000	0.000	52.50	0.00	0.0000	0.0000	0.0000	0.00
65	SAGBEND	-218.63	-35.95	7.05	318.80	0.000	0.000	52.50	0.00	0.0000	0.0000	0.0000	0.00
66	SAGBEND	-224.63	-36.69	7.03	324.85	0.000	0.000	52.50	0.00	0.0000	0.0000	0.0000	0.00
67	SAGBEND	-230.64	-37.43	7.01	330.90	0.000	0.000	52.49	0.00	0.0000	0.0000	0.0000	0.00
68	SAGBEND	-236.64	-38.17	7.00	336.95	0.000	0.000	52.49	0.00	0.0000	0.0000	0.0000	0.00
69	SAGBEND	-239.78	-38.55	6.99	340.11	0.000	0.000	52.49	0.00	0.0000	0.0000	0.0000	0.00
70	SAGBEND	-244.22	-39.08	6.53	344.58	0.000	0.000	52.44	0.00	0.0000	0.0000	0.0000	0.00
71	SAGBEND	-248.66	-39.57	6.07	349.05	0.000	0.000	52.40	0.00	0.0000	0.0000	0.0000	0.00
72	SAGBEND	-254.68	-40.17	5.45	355.10	0.000	0.000	52.34	0.00	0.0000	0.0000	0.0000	0.00
73	SAGBEND	-260.70	-40.71	4.82	361.15	0.000	0.000	52.29	0.00	0.0000	0.0000	0.0000	0.00
74	SAGBEND	-266.73	-41.19	4.20	367.20	0.000	0.000	52.24	0.00	0.0000	0.0000	0.0000	0.00
75	SAGBEND	-272.77	-41.60	3.57	373.25	0.000	0.000	52.20	0.00	0.0000	0.0000	0.0000	0.00
76	SAGBEND	-278.81	-41.94	2.94	379.30	0.000	0.000	52.17	0.00	0.0000	0.0000	0.0000	0.00
77	SAGBEND	-284.85	-42.22	2.32	385.35	0.000	0.000	52.14	0.00	0.0000	0.0000	0.0000	0.00
78	SAGBEND	-290.90	-42.43	1.69	391.40	0.000	0.000	52.12	0.00	0.0000	0.0000	0.0000	0.00
79	SAGBEND	-296.95	-42.58	1.06	397.45	0.000	0.000	52.11	0.00	0.0000	0.0000	0.0000	0.00
80	SAGBEND	-303.00	-42.66	0.44	403.50	0.027	0.000	52.10	-0.01	0.0000	0.0000	0.0000	0.00
81	SEABED	-309.05	-42.67	0.01	409.55	0.442	0.000	52.10	0.00	0.0000	0.0000	0.0000	0.00
82	SEABED	-315.10	-42.67	0.00	415.60	0.570	0.000	52.10	0.00	0.0000	0.0000	0.0000	0.00
83	SEABED	-321.14	-42.67	0.00	421.65	0.572	0.000	52.10	0.00	0.0000	0.0000	0.0000	0.00
84	SEABED	-327.19	-42.67	0.00	427.70	0.572	0.000	52.10	0.00	0.0000	0.0000	0.0000	0.00
85	SEABED	-333.24	-42.67	0.00	433.75	0.572	0.000	52.10	0.00	0.0000	0.0000	0.0000	0.00
86	SEABED	-339.29	-42.67	0.00	439.80	0.572	0.000	52.10	0.00	0.0000	0.0000	0.0000	0.00
87	SEABED	-345.34	-42.67	0.00	445.85	0.572	0.000	52.10	0.00	0.0000	0.0000	0.0000	0.00
88	SEABED	-351.39	-42.67	0.00	451.90	0.572	0.000	52.10	0.00	0.0000	0.0000	0.0000	0.00
89	SEABED	-357.44	-42.67	0.00	457.95	0.572	0.000	52.10	0.00	0.0000	0.0000	0.0000	0.00
90	SEABED	-363.49	-42.67	0.00	464.00	0.572	0.000	52.10	0.00	0.0000	0.0000	0.0000	0.00
91	SEABED	-369.54	-42.67	0.00	470.04	0.572	0.000	52.10	0.00	0.0000	0.0000	0.0000	0.00
92	SEABED	-375.59	-42.67	0.00	476.09	0.572	0.000	52.10	0.00	0.0000	0.0000	0.0000	0.00
93	SEABED	-381.64	-42.67	0.00	482.14	0.572	0.000	52.10	0.00	0.0000	0.0000	0.0000	0.00
94	SEABED	-387.69	-42.67	0.00	488.19	0.572	0.000	52.10	0.00	0.0000	0.0000	0.0000	0.00
95	SEABED	-393.74	-42.67	0.00	494.24	0.572	0.000	52.10	0.00	0.0000	0.0000	0.0000	0.00
96	SEABED	-399.79	-42.67	0.00	500.29	0.572	0.000	52.10	0.00	0.0000	0.0000	0.0000	0.00
97	SEABED	-405.84	-42.67	0.00	506.34	0.572	0.000	52.10	0.00	0.0000	0.0000	0.0000	0.00
98	SEABED	-411.89	-42.67	0.00	512.39	0.572	0.000	52.10	0.00	0.0000	0.0000	0.0000	0.00
99	SEABED	-417.94	-42.67	0.00	518.44	0.572	0.000	52.10	0.00	0.0000	0.0000	0.0000	0.00
100	SEABED	-423.99	-42.67	0.00	524.49	0.572	0.000	52.10	0.00	0.0000	0.0000	0.0000	0.00
101	SEABED	-430.04	-42.67	0.00	530.54	0.572	0.000	52.10	0.00	0.0000	0.0000	0.0000	0.00
102	SEABED	-436.09	-42.67	0.00	536.59	0.572	0.000	52.10	0.00	0.0000	0.0000	0.0000	0.00
103	SEABED	-442.14	-42.67	0.00	542.64	0.572	0.000	52.10	0.00	0.0000	0.0000	0.0000	0.00
104	SEABED	-448.19	-42.67	0.00	548.69	0.572	0.000	52.10	0.00	0.0000	0.0000	0.0000	0.00

S T A T I C P I P E C O O R D I N A T E S, F O R C E S A N D S T R A I N S

NODE NO.	PIPE SECTION	X COORD (M)	Y COORD (M)	VERT ANGLE (DEG)	PIPE LENGTH (M)	SUPPORT REACTION (KN)	SEPARA -TION (M)	AXIAL TENSION (KN)	BENDING MOMENT (KN-M)	TENSILE STRAIN (PCT)	BENDING STRAIN (PCT)	TOTAL STRAIN (PCT)	PERCNT ALLOW (PCT)
105	SEABED	-454.24	-42.67	0.00	554.74	0.572	0.000	52.10	0.00	0.0000	0.0000	0.0000	0.00
106	SEABED	-460.29	-42.67	0.00	560.79	0.572	0.000	52.10	0.00	0.0000	0.0000	0.0000	0.00
107	SEABED	-466.34	-42.67	0.00	566.84	0.572	0.000	52.10	0.00	0.0000	0.0000	0.0000	0.00
108	SEABED	-472.39	-42.67	0.00	572.89	0.572	0.000	52.10	0.00	0.0000	0.0000	0.0000	0.00
109	SEABED	-478.43	-42.67	0.00	578.94	0.572	0.000	52.10	0.00	0.0000	0.0000	0.0000	0.00
110	SEABED	-484.48	-42.67	0.00	584.99	0.572	0.000	52.10	0.00	0.0000	0.0000	0.0000	0.00
111	SEABED	-490.53	-42.67	0.00	591.04	0.572	0.000	52.10	0.00	0.0000	0.0000	0.0000	0.00
112	SEABED	-496.58	-42.67	0.00	597.09	0.572	0.000	52.10	0.00	0.0000	0.0000	0.0000	0.00
113	SEABED	-502.63	-42.67	0.00	603.14	0.572	0.000	52.10	0.00	0.0000	0.0000	0.0000	0.00
114	SEABED	-508.68	-42.67	0.00	609.19	0.572	0.000	52.10	0.00	0.0000	0.0000	0.0000	0.00
115	SEABED	-514.73	-42.67	0.00	615.24	0.572	0.000	52.10	0.00	0.0000	0.0000	0.0000	0.00
116	SEABED	-520.78	-42.67	0.00	621.29	0.572	0.000	52.10	0.00	0.0000	0.0000	0.0000	0.00
117	SEABED	-526.83	-42.67	0.00	627.34	0.572	0.000	52.10	0.00	0.0000	0.0000	0.0000	0.00
118	SEABED	-532.88	-42.67	0.00	633.38	0.572	0.000	52.10	0.00	0.0000	0.0000	0.0000	0.00
119	SEABED	-538.93	-42.67	0.00	639.43	0.572	0.000	52.10	0.00	0.0000	0.0000	0.0000	0.00
120	SEABED	-544.98	-42.67	0.00	645.48	0.572	0.000	52.10	0.00	0.0000	0.0000	0.0000	0.00
121	SEABED	-551.03	-42.67	0.00	651.53	0.572	0.000	52.10	0.00	0.0000	0.0000	0.0000	0.00
122	SEABED	-557.08	-42.67	0.00	657.58	0.572	0.000	52.10	0.00	0.0000	0.0000	0.0000	0.00
123	SEABED	-563.13	-42.67	0.00	663.63	0.572	0.000	52.10	0.00	0.0000	0.0000	0.0000	0.00
124	SEABED	-569.18	-42.67	0.00	669.68	0.572	0.000	52.10	0.00	0.0000	0.0000	0.0000	0.00
125	SEABED	-575.23	-42.67	0.00	675.73	0.572	0.000	52.10	0.00	0.0000	0.0000	0.0000	0.00
126	SEABED	-581.28	-42.67	0.00	681.78	0.572	0.000	52.10	0.00	0.0000	0.0000	0.0000	0.00
127	SEABED	-587.33	-42.67	0.00	687.83	0.572	0.000	52.10	0.00	0.0000	0.0000	0.0000	0.00
128	SEABED	-593.38	-42.67	0.00	693.88	0.572	0.000	52.10	0.00	0.0000	0.0000	0.0000	0.00
129	SEABED	-599.43	-42.67	0.00	699.93	0.572	0.000	52.10	0.00	0.0000	0.0000	0.0000	0.00
130	SEABED	-605.48	-42.67	0.00	705.98	0.572	0.000	52.10	0.00	0.0000	0.0000	0.0000	0.00
131	SEABED	-611.53	-42.67	0.00	712.03	0.572	0.000	52.10	0.00	0.0000	0.0000	0.0000	0.00
132	SEABED	-617.58	-42.67	0.00	718.08	0.572	0.000	52.10	0.00	0.0000	0.0000	0.0000	0.00
133	SEABED	-623.63	-42.67	0.00	724.13	0.572	0.000	52.10	0.00	0.0000	0.0000	0.0000	0.00
134	SEABED	-629.68	-42.67	0.00	730.18	0.571	0.000	52.10	0.00	0.0000	0.0000	0.0000	0.00
135	SEABED	-635.73	-42.67	-0.01	736.23	0.431	0.000	52.10	0.00	0.0000	0.0000	0.0000	0.00
136	SEABED	-639.58	-42.67	-0.13	740.09	0.000	0.000	52.10	0.00	0.0000	0.0000	0.0000	0.00

S T A T I C P I P E C O O R D I N A T E S, F O R C E S A N D S T R A I N S

NODE NO.	PIPE SECTION	X COORD (M)	Y COORD (M)	VERT ANGLE (DEG)	PIPE LENGTH (M)	SUPPORT REACTION (KN)	SEPARA -TION (M)	AXIAL TENSION (KN)	BENDING MOMENT (KN-M)	TENSILE STRAIN (PCT)	BENDING STRAIN (PCT)	TOTAL STRAIN (PCT)	PERCNT ALLOW (PCT)
1	LAYBARGE	96.31	6.41	1.93	0.00	9.923	0.000	0.00	2.74	0.0000	0.0021	0.0021	0.00
3	LAYBARGE	84.28	6.05	1.58	12.04	24.203	0.000	-0.73	-19.29	0.0000	-0.0144	0.0145	0.00
5	LAYBARGE	73.45	5.73	1.90	22.87	24.203	0.000	-1.39	-29.07	-0.0001	-0.0217	0.0218	0.00
7	TENSIONR	60.10	5.24	2.32	36.23	32.555	0.000	108.11	-24.36	0.0050	-0.0182	0.0232	0.00
9	LAYBARGE	51.10	4.87	2.19	45.24	0.000	0.000	107.38	32.45	0.0050	0.0243	0.0293	0.00
10	LAYBARGE	46.45	4.70	1.88	49.89	7.786	0.000	107.07	16.06	0.0050	0.0120	0.0170	0.00
12	LAYBARGE	35.36	4.31	2.74	60.99	40.416	0.000	105.98	-88.74	0.0049	-0.0664	0.0713	0.00
14	LAYBARGE	25.34	3.64	4.79	71.03	17.229	0.000	104.80	-75.42	0.0049	-0.0564	0.0613	0.00
16	LAYBARGE	19.31	3.08	5.82	77.09	0.000	0.000	103.72	-66.46	0.0048	-0.0497	0.0545	0.00
17	LAYBARGE	8.89	1.76	9.47	87.60	62.101	0.000	99.74	-235.21	0.0046	-0.5801	0.5847	0.00
19	LAYBARGE	4.92	1.02	11.54	91.63	0.000	0.000	99.14	-155.17	0.0046	-0.1163	0.1209	0.00
20	LAYBARGE	3.11	0.64	12.20	93.48	0.000	0.015	98.56	-125.56	0.0046	-0.0939	0.0985	0.00
24	STINGER	-7.54	-1.92	14.54	104.43	14.719	0.000	95.60	-72.82	0.0044	-0.0545	0.0589	0.00
26	STINGER	-16.37	-4.30	15.45	113.57	9.697	0.000	93.33	-20.18	0.0042	-0.0151	0.0194	0.00
29	STINGER	-25.81	-6.90	15.06	123.36	2.743	0.000	90.72	37.34	0.0040	0.0279	0.0321	0.00
31	STINGER	-36.39	-9.62	13.77	134.29	0.000	0.250	88.00	38.75	0.0038	0.0290	0.0331	0.00
33	STINGER	-39.30	-10.32	13.53	137.29	0.000	0.809	87.32	22.57	0.0038	0.0169	0.0209	0.00
35	SAGBEND	-42.05	-10.98	13.45	140.11	0.000	0.000	86.67	0.00	0.0037	0.0000	0.0040	0.00
36	SAGBEND	-45.26	-11.39	7.31	143.36	0.000	0.000	87.17	0.00	0.0000	0.0000	0.0000	0.00
37	SAGBEND	-51.26	-12.16	7.30	149.41	0.000	0.000	87.16	0.00	0.0000	0.0000	0.0000	0.00
38	SAGBEND	-57.26	-12.93	7.29	155.46	0.000	0.000	87.16	0.00	0.0000	0.0000	0.0000	0.00
39	SAGBEND	-63.27	-13.70	7.28	161.51	0.000	0.000	87.16	0.00	0.0000	0.0000	0.0000	0.00
40	SAGBEND	-69.27	-14.46	7.27	167.56	0.000	0.000	87.16	0.00	0.0000	0.0000	0.0000	0.00
41	SAGBEND	-75.27	-15.23	7.26	173.61	0.000	0.000	87.16	0.00	0.0000	0.0000	0.0000	0.00
42	SAGBEND	-81.27	-15.99	7.25	179.66	0.000	0.000	87.15	0.00	0.0000	0.0000	0.0000	0.00
43	SAGBEND	-87.27	-16.76	7.24	185.71	0.000	0.000	87.15	0.00	0.0000	0.0000	0.0000	0.00
44	SAGBEND	-93.27	-17.52	7.23	191.76	0.000	0.000	87.15	0.00	0.0000	0.0000	0.0000	0.00
45	SAGBEND	-99.27	-18.28	7.22	197.81	0.000	0.000	87.15	0.00	0.0000	0.0000	0.0000	0.00
46	SAGBEND	-105.28	-19.04	7.21	203.86	0.000	0.000	87.15	0.00	0.0000	0.0000	0.0000	0.00
47	SAGBEND	-111.28	-19.80	7.20	209.91	0.000	0.000	87.14	0.00	0.0000	0.0000	0.0000	0.00
48	SAGBEND	-117.28	-20.55	7.19	215.96	0.000	0.000	87.14	0.00	0.0000	0.0000	0.0000	0.00
49	SAGBEND	-123.28	-21.31	7.18	222.00	0.000	0.000	87.14	0.00	0.0000	0.0000	0.0000	0.00
50	SAGBEND	-129.29	-22.06	7.16	228.05	0.000	0.000	87.14	0.00	0.0000	0.0000	0.0000	0.00
51	SAGBEND	-135.29	-22.82	7.15	234.10	0.000	0.000	87.14	0.00	0.0000	0.0000	0.0000	0.00
52	SAGBEND	-141.29	-23.57	7.14	240.15	0.000	0.000	87.14	0.00	0.0000	0.0000	0.0000	0.00
53	SAGBEND	-147.29	-24.32	7.13	246.20	0.000	0.000	87.13	0.00	0.0000	0.0000	0.0000	0.00
54	SAGBEND	-153.30	-25.07	7.12	252.25	0.000	0.000	87.13	0.00	0.0000	0.0000	0.0000	0.00
55	SAGBEND	-159.30	-25.82	7.11	258.30	0.000	0.000	87.13	0.00	0.0000	0.0000	0.0000	0.00
56	SAGBEND	-165.30	-26.57	7.10	264.35	0.000	0.000	87.13	0.00	0.0000	0.0000	0.0000	0.00
57	SAGBEND	-171.31	-27.32	7.09	270.40	0.000	0.000	87.13	0.00	0.0000	0.0000	0.0000	0.00
58	SAGBEND	-177.31	-28.07	7.08	276.45	0.000	0.000	87.12	0.00	0.0000	0.0000	0.0000	0.00
59	SAGBEND	-183.31	-28.81	7.07	282.50	0.000	0.000	87.12	0.00	0.0000	0.0000	0.0000	0.00
60	SAGBEND	-189.32	-29.56	7.06	288.55	0.000	0.000	87.12	0.00	0.0000	0.0000	0.0000	0.00

S T A T I C P I P E C O O R D I N A T E S, F O R C E S A N D S T R A I N S

NODE NO.	PIPE SECTION	X COORD (M)	Y COORD (M)	VERT ANGLE (DEG)	PIPE LENGTH (M)	SUPPORT REACTION (KN)	SEPARA -TION (M)	AXIAL TENSION (KN)	BENDING MOMENT (KN-M)	TENSILE STRAIN (PCT)	BENDING STRAIN (PCT)	TOTAL STRAIN (PCT)	PERCNT ALLOW (PCT)
61	SAGBEND	-195.32	-30.30	7.05	294.60	0.000	0.000	87.12	0.00	0.0000	0.0000	0.0000	0.00
62	SAGBEND	-201.33	-31.04	7.04	300.65	0.000	0.000	87.12	0.00	0.0000	0.0000	0.0000	0.00
63	SAGBEND	-207.33	-31.78	7.03	306.70	0.000	0.000	87.11	0.00	0.0000	0.0000	0.0000	0.00
64	SAGBEND	-213.33	-32.52	7.02	312.75	0.000	0.000	87.11	0.00	0.0000	0.0000	0.0000	0.00
65	SAGBEND	-219.34	-33.26	7.01	318.80	0.000	0.000	87.11	0.00	0.0000	0.0000	0.0000	0.00
66	SAGBEND	-225.34	-34.00	7.00	324.85	0.000	0.000	87.11	0.00	0.0000	0.0000	0.0000	0.00
67	SAGBEND	-231.35	-34.74	6.99	330.90	0.000	0.000	87.11	0.00	0.0000	0.0000	0.0000	0.00
68	SAGBEND	-237.35	-35.47	6.98	336.95	0.000	0.000	87.10	0.00	0.0000	0.0000	0.0000	0.00
69	SAGBEND	-240.49	-35.85	6.97	340.11	0.000	0.000	87.10	0.00	0.0000	0.0000	0.0000	0.00
70	SAGBEND	-244.93	-36.39	6.70	344.58	0.000	0.000	87.05	0.00	0.0000	0.0000	0.0000	0.00
71	SAGBEND	-249.37	-36.90	6.42	349.05	0.000	0.000	87.00	0.00	0.0000	0.0000	0.0000	0.00
72	SAGBEND	-255.38	-37.55	6.05	355.10	0.000	0.000	86.94	0.00	0.0000	0.0000	0.0000	0.00
73	SAGBEND	-261.40	-38.17	5.67	361.15	0.000	0.000	86.88	0.00	0.0000	0.0000	0.0000	0.00
74	SAGBEND	-267.42	-38.75	5.30	367.20	0.000	0.000	86.83	0.00	0.0000	0.0000	0.0000	0.00
75	SAGBEND	-273.45	-39.29	4.92	373.25	0.000	0.000	86.78	0.00	0.0000	0.0000	0.0000	0.00
76	SAGBEND	-279.48	-39.79	4.54	379.30	0.000	0.000	86.73	0.00	0.0000	0.0000	0.0000	0.00
77	SAGBEND	-285.51	-40.25	4.17	385.35	0.000	0.000	86.69	0.00	0.0000	0.0000	0.0000	0.00
78	SAGBEND	-291.54	-40.67	3.79	391.40	0.000	0.000	86.65	0.00	0.0000	0.0000	0.0000	0.00
79	SAGBEND	-297.58	-41.05	3.41	397.45	0.000	0.000	86.61	0.00	0.0000	0.0000	0.0000	0.00
80	SAGBEND	-303.62	-41.39	3.03	403.50	0.000	0.000	86.58	0.00	0.0000	0.0000	0.0000	0.00
81	SAGBEND	-309.67	-41.69	2.66	409.55	0.000	0.000	86.55	0.00	0.0000	0.0000	0.0000	0.00
82	SAGBEND	-315.71	-41.95	2.28	415.60	0.000	0.000	86.53	0.00	0.0000	0.0000	0.0000	0.00
83	SAGBEND	-321.75	-42.17	1.90	421.65	0.000	0.000	86.51	0.00	0.0000	0.0000	0.0000	0.00
84	SAGBEND	-327.80	-42.35	1.52	427.70	0.000	0.000	86.49	0.00	0.0000	0.0000	0.0000	0.00
85	SAGBEND	-333.85	-42.49	1.14	433.75	0.000	0.000	86.48	0.00	0.0000	0.0000	0.0000	0.00
86	SAGBEND	-339.90	-42.59	0.76	439.80	0.000	0.000	86.47	0.00	0.0000	0.0000	0.0000	0.00
87	SAGBEND	-345.95	-42.65	0.39	445.85	0.002	0.000	86.46	0.00	0.0000	0.0000	0.0000	0.00
88	SEABED	-352.00	-42.67	0.03	451.90	0.291	0.000	86.46	-0.01	0.0000	0.0000	0.0000	0.00
89	SEABED	-358.05	-42.67	0.00	457.95	0.557	0.000	86.46	0.00	0.0000	0.0000	0.0000	0.00
90	SEABED	-364.10	-42.67	0.00	464.00	0.571	0.000	86.46	0.00	0.0000	0.0000	0.0000	0.00
91	SEABED	-370.15	-42.67	0.00	470.05	0.572	0.000	86.46	0.00	0.0000	0.0000	0.0000	0.00
92	SEABED	-376.20	-42.67	0.00	476.10	0.572	0.000	86.46	0.00	0.0000	0.0000	0.0000	0.00
93	SEABED	-382.25	-42.67	0.00	482.15	0.572	0.000	86.46	0.00	0.0000	0.0000	0.0000	0.00
94	SEABED	-388.30	-42.67	0.00	488.19	0.572	0.000	86.46	0.00	0.0000	0.0000	0.0000	0.00
95	SEABED	-394.35	-42.67	0.00	494.24	0.572	0.000	86.46	0.00	0.0000	0.0000	0.0000	0.00
96	SEABED	-400.40	-42.67	0.00	500.29	0.572	0.000	86.46	0.00	0.0000	0.0000	0.0000	0.00
97	SEABED	-406.45	-42.67	0.00	506.34	0.572	0.000	86.46	0.00	0.0000	0.0000	0.0000	0.00
98	SEABED	-412.50	-42.67	0.00	512.39	0.572	0.000	86.46	0.00	0.0000	0.0000	0.0000	0.00
99	SEABED	-418.54	-42.67	0.00	518.44	0.572	0.000	86.46	0.00	0.0000	0.0000	0.0000	0.00
100	SEABED	-424.59	-42.67	0.00	524.49	0.572	0.000	86.46	0.00	0.0000	0.0000	0.0000	0.00
101	SEABED	-430.64	-42.67	0.00	530.54	0.572	0.000	86.46	0.00	0.0000	0.0000	0.0000	0.00
102	SEABED	-436.69	-42.67	0.00	536.59	0.572	0.000	86.46	0.00	0.0000	0.0000	0.0000	0.00
103	SEABED	-442.74	-42.67	0.00	542.64	0.572	0.000	86.46	0.00	0.0000	0.0000	0.0000	0.00
104	SEABED	-448.79	-42.67	0.00	548.69	0.572	0.000	86.46	0.00	0.0000	0.0000	0.0000	0.00

S T A T I C P I P E C O O R D I N A T E S, F O R C E S A N D S T R A I N S

NODE NO.	PIPE SECTION	X COORD (M)	Y COORD (M)	VERT ANGLE (DEG)	PIPE LENGTH (M)	SUPPORT REACTION (KN)	SEPARA -TION (M)	AXIAL TENSION (KN)	BENDING MOMENT (KN-M)	TENSILE STRAIN (PCT)	BENDING STRAIN (PCT)	TOTAL STRAIN (PCT)	PERCNT ALLOW (PCT)
105	SEABED	-454.84	-42.67	0.00	554.74	0.572	0.000	86.46	0.00	0.0000	0.0000	0.0000	0.00
106	SEABED	-460.89	-42.67	0.00	560.79	0.572	0.000	86.46	0.00	0.0000	0.0000	0.0000	0.00
107	SEABED	-466.94	-42.67	0.00	566.84	0.572	0.000	86.46	0.00	0.0000	0.0000	0.0000	0.00
108	SEABED	-472.99	-42.67	0.00	572.89	0.572	0.000	86.46	0.00	0.0000	0.0000	0.0000	0.00
109	SEABED	-479.04	-42.67	0.00	578.94	0.572	0.000	86.46	0.00	0.0000	0.0000	0.0000	0.00
110	SEABED	-485.09	-42.67	0.00	584.99	0.572	0.000	86.46	0.00	0.0000	0.0000	0.0000	0.00
111	SEABED	-491.14	-42.67	0.00	591.04	0.572	0.000	86.46	0.00	0.0000	0.0000	0.0000	0.00
112	SEABED	-497.19	-42.67	0.00	597.09	0.572	0.000	86.46	0.00	0.0000	0.0000	0.0000	0.00
113	SEABED	-503.24	-42.67	0.00	603.14	0.572	0.000	86.46	0.00	0.0000	0.0000	0.0000	0.00
114	SEABED	-509.29	-42.67	0.00	609.19	0.572	0.000	86.46	0.00	0.0000	0.0000	0.0000	0.00
115	SEABED	-515.34	-42.67	0.00	615.24	0.572	0.000	86.46	0.00	0.0000	0.0000	0.0000	0.00
116	SEABED	-521.39	-42.67	0.00	621.29	0.572	0.000	86.46	0.00	0.0000	0.0000	0.0000	0.00
117	SEABED	-527.44	-42.67	0.00	627.34	0.572	0.000	86.46	0.00	0.0000	0.0000	0.0000	0.00
118	SEABED	-533.49	-42.67	0.00	633.39	0.572	0.000	86.46	0.00	0.0000	0.0000	0.0000	0.00
119	SEABED	-539.54	-42.67	0.00	639.44	0.572	0.000	86.46	0.00	0.0000	0.0000	0.0000	0.00
120	SEABED	-545.59	-42.67	0.00	645.49	0.572	0.000	86.46	0.00	0.0000	0.0000	0.0000	0.00
121	SEABED	-551.64	-42.67	0.00	651.54	0.572	0.000	86.46	0.00	0.0000	0.0000	0.0000	0.00
122	SEABED	-557.69	-42.67	0.00	657.59	0.572	0.000	86.46	0.00	0.0000	0.0000	0.0000	0.00
123	SEABED	-563.74	-42.67	0.00	663.64	0.572	0.000	86.46	0.00	0.0000	0.0000	0.0000	0.00
124	SEABED	-569.79	-42.67	0.00	669.69	0.572	0.000	86.46	0.00	0.0000	0.0000	0.0000	0.00
125	SEABED	-575.84	-42.67	0.00	675.74	0.572	0.000	86.46	0.00	0.0000	0.0000	0.0000	0.00
126	SEABED	-581.89	-42.67	0.00	681.79	0.572	0.000	86.46	0.00	0.0000	0.0000	0.0000	0.00
127	SEABED	-587.94	-42.67	0.00	687.84	0.572	0.000	86.46	0.00	0.0000	0.0000	0.0000	0.00
128	SEABED	-593.99	-42.67	0.00	693.89	0.572	0.000	86.46	0.00	0.0000	0.0000	0.0000	0.00
129	SEABED	-600.04	-42.67	0.00	699.94	0.572	0.000	86.46	0.00	0.0000	0.0000	0.0000	0.00
130	SEABED	-606.09	-42.67	0.00	705.98	0.572	0.000	86.46	0.00	0.0000	0.0000	0.0000	0.00
131	SEABED	-612.14	-42.67	0.00	712.03	0.572	0.000	86.46	0.00	0.0000	0.0000	0.0000	0.00
132	SEABED	-618.19	-42.67	0.00	718.08	0.572	0.000	86.46	0.00	0.0000	0.0000	0.0000	0.00
133	SEABED	-624.24	-42.67	0.00	724.13	0.572	0.000	86.46	0.00	0.0000	0.0000	0.0000	0.00
134	SEABED	-630.29	-42.67	0.00	730.18	0.567	0.000	86.46	0.00	0.0000	0.0000	0.0000	0.00
135	SEABED	-636.33	-42.67	-0.01	736.23	0.409	0.000	86.46	0.00	0.0000	0.0000	0.0000	0.00
136	SEABED	-640.19	-42.67	-0.11	740.09	0.000	0.000	86.46	0.00	0.0000	0.0000	0.0000	0.00

S T A T I C P I P E C O O R D I N A T E S, F O R C E S A N D S T R A I N S

NODE	PIPE	X	Y	VERT	PIPE	SUPPORT	SEPARA	AXIAL	BENDING	TENSILE	BENDING	TOTAL	PERCNT

NO.	SECTION	COORD (M)	COORD (M)	ANGLE (DEG)	LENGTH (M)	REACTION (KN)	-TION (M)	TENSION (KN)	MOMENT (KN-M)	STRAIN (PCT)	STRAIN (PCT)	STRAIN (PCT)	ALLOW (PCT)
1	LAYBARGE	96.31	6.41	1.93	0.00	9.924	0.000	0.00	2.74	0.0000	0.0021	0.0021	0.00
3	LAYBARGE	84.28	6.05	1.58	12.04	24.203	0.000	-0.73	-19.29	0.0000	-0.0144	0.0145	0.00
5	LAYBARGE	73.45	5.73	1.90	22.87	24.205	0.000	-1.39	-29.07	-0.0001	-0.0217	0.0218	0.00
7	TENSIONR	60.10	5.24	2.32	36.23	32.547	0.000	108.12	-24.35	0.0050	-0.0182	0.0232	0.00
9	LAYBARGE	51.10	4.87	2.19	45.24	0.000	0.000	107.38	32.41	0.0050	0.0242	0.0292	0.00
10	LAYBARGE	46.45	4.70	1.88	49.89	7.829	0.000	107.07	15.99	0.0050	0.0120	0.0169	0.00
12	LAYBARGE	35.36	4.31	2.74	60.99	40.217	0.000	105.99	-88.56	0.0049	-0.0662	0.0712	0.00
14	LAYBARGE	25.34	3.64	4.80	71.03	17.736	0.000	104.80	-76.59	0.0049	-0.0573	0.0622	0.00
16	LAYBARGE	19.31	3.08	5.83	77.09	0.000	0.000	103.72	-65.86	0.0048	-0.0493	0.0541	0.00
17	LAYBARGE	8.89	1.76	9.42	87.60	46.579	0.000	99.79	-235.13	0.0046	-0.5776	0.5822	0.00
19	LAYBARGE	4.92	1.01	11.76	91.63	0.000	0.000	98.67	-212.32	0.0046	-0.2225	0.2271	0.00
20	LAYBARGE	3.11	0.62	12.76	93.48	18.362	0.000	97.88	-211.47	0.0046	-0.2174	0.2219	0.00
24	STINGER	-7.53	-2.27	17.40	104.51	24.744	0.000	94.84	-153.64	0.0043	-0.1151	0.1195	0.00
26	STINGER	-16.20	-5.19	19.34	113.66	4.332	0.000	92.44	-29.91	0.0042	-0.0224	0.0267	0.00
29	STINGER	-25.46	-8.44	18.95	123.47	3.560	0.000	89.17	46.66	0.0039	0.0349	0.0390	0.00
31	STINGER	-35.84	-11.81	16.92	134.39	0.000	0.387	85.68	85.16	0.0037	0.0637	0.0677	0.00
33	STINGER	-38.66	-12.66	16.29	137.33	0.000	1.018	84.85	82.44	0.0036	0.0617	0.0656	0.00
35	SAGBEND	-44.46	-14.28	15.16	143.35	0.000	0.000	83.29	59.03	0.0035	0.0442	0.0480	0.00
36	SAGBEND	-47.72	-15.15	14.75	146.73	0.000	0.000	82.48	34.32	0.0034	0.0257	0.0295	0.00
37	SAGBEND	-50.99	-16.01	14.60	150.11	0.000	0.000	81.64	0.00	0.0034	0.0000	0.0038	0.00
38	SAGBEND	-56.30	-16.61	6.42	155.46	0.000	0.000	82.48	0.00	0.0000	0.0000	0.0000	0.00
39	SAGBEND	-62.31	-17.28	6.41	161.51	0.000	0.000	82.48	0.00	0.0000	0.0000	0.0000	0.00
40	SAGBEND	-68.32	-17.96	6.40	167.56	0.000	0.000	82.48	0.00	0.0000	0.0000	0.0000	0.00
41	SAGBEND	-74.34	-18.63	6.39	173.61	0.000	0.000	82.48	0.00	0.0000	0.0000	0.0000	0.00
42	SAGBEND	-80.35	-19.30	6.38	179.66	0.000	0.000	82.48	0.00	0.0000	0.0000	0.0000	0.00
43	SAGBEND	-86.36	-19.98	6.37	185.71	0.000	0.000	82.47	0.00	0.0000	0.0000	0.0000	0.00
44	SAGBEND	-92.37	-20.65	6.36	191.76	0.000	0.000	82.47	0.00	0.0000	0.0000	0.0000	0.00
45	SAGBEND	-98.39	-21.32	6.34	197.81	0.000	0.000	82.47	0.00	0.0000	0.0000	0.0000	0.00
46	SAGBEND	-104.40	-21.98	6.33	203.86	0.000	0.000	82.47	0.00	0.0000	0.0000	0.0000	0.00
47	SAGBEND	-110.41	-22.65	6.32	209.91	0.000	0.000	82.47	0.00	0.0000	0.0000	0.0000	0.00
48	SAGBEND	-116.42	-23.32	6.31	215.96	0.000	0.000	82.47	0.00	0.0000	0.0000	0.0000	0.00
49	SAGBEND	-122.44	-23.98	6.30	222.01	0.000	0.000	82.46	0.00	0.0000	0.0000	0.0000	0.00
50	SAGBEND	-128.45	-24.64	6.29	228.06	0.000	0.000	82.46	0.00	0.0000	0.0000	0.0000	0.00
51	SAGBEND	-134.46	-25.31	6.28	234.11	0.000	0.000	82.46	0.00	0.0000	0.0000	0.0000	0.00
52	SAGBEND	-140.48	-25.97	6.27	240.16	0.000	0.000	82.46	0.00	0.0000	0.0000	0.0000	0.00
53	SAGBEND	-146.49	-26.63	6.26	246.21	0.000	0.000	82.46	0.00	0.0000	0.0000	0.0000	0.00
54	SAGBEND	-152.51	-27.29	6.25	252.26	0.000	0.000	82.45	0.00	0.0000	0.0000	0.0000	0.00
55	SAGBEND	-158.52	-27.94	6.24	258.31	0.000	0.000	82.45	0.00	0.0000	0.0000	0.0000	0.00
56	SAGBEND	-164.53	-28.60	6.22	264.36	0.000	0.000	82.45	0.00	0.0000	0.0000	0.0000	0.00
57	SAGBEND	-170.55	-29.26	6.21	270.41	0.000	0.000	82.45	0.00	0.0000	0.0000	0.0000	0.00
58	SAGBEND	-176.56	-29.91	6.20	276.46	0.000	0.000	82.45	0.00	0.0000	0.0000	0.0000	0.00
59	SAGBEND	-182.58	-30.56	6.19	282.51	0.000	0.000	82.45	0.00	0.0000	0.0000	0.0000	0.00
60	SAGBEND	-188.59	-31.21	6.18	288.56	0.000	0.000	82.44	0.00	0.0000	0.0000	0.0000	0.00

S T A T I C P I P E C O O R D I N A T E S, F O R C E S A N D S T R A I N S

NODE NO.	PIPE SECTION	X COORD (M)	Y COORD (M)	VERT ANGLE (DEG)	PIPE LENGTH (M)	SUPPORT REACTION (KN)	SEPARA -TION (M)	AXIAL TENSION (KN)	BENDING MOMENT (KN-M)	TENSILE STRAIN (PCT)	BENDING STRAIN (PCT)	TOTAL STRAIN (PCT)	PERCNT ALLOW (PCT)
61	SAGBEND	-194.60	-31.87	6.17	294.61	0.000	0.000	82.44	0.00	0.0000	0.0000	0.0000	0.00
62	SAGBEND	-200.62	-32.52	6.16	300.66	0.000	0.000	82.44	0.00	0.0000	0.0000	0.0000	0.00
63	SAGBEND	-206.63	-33.16	6.15	306.71	0.000	0.000	82.44	0.00	0.0000	0.0000	0.0000	0.00
64	SAGBEND	-212.65	-33.81	6.14	312.76	0.000	0.000	82.44	0.00	0.0000	0.0000	0.0000	0.00
65	SAGBEND	-218.66	-34.46	6.13	318.80	0.000	0.000	82.44	0.00	0.0000	0.0000	0.0000	0.00
66	SAGBEND	-224.68	-35.10	6.12	324.85	0.000	0.000	82.43	0.00	0.0000	0.0000	0.0000	0.00
67	SAGBEND	-230.70	-35.75	6.10	330.90	0.000	0.000	82.43	0.00	0.0000	0.0000	0.0000	0.00
68	SAGBEND	-236.71	-36.39	6.09	336.95	0.000	0.000	82.43	0.00	0.0000	0.0000	0.0000	0.00
69	SAGBEND	-242.73	-37.03	6.08	343.00	0.000	0.000	82.43	0.00	0.0000	0.0000	0.0000	0.00
70	SAGBEND	-246.26	-37.41	6.08	346.56	0.000	0.000	82.43	0.00	0.0000	0.0000	0.0000	0.00
71	SAGBEND	-249.79	-37.78	6.07	350.11	0.000	0.000	82.43	0.00	0.0000	0.0000	0.0000	0.00
72	SAGBEND	-254.76	-38.30	5.74	355.10	0.000	0.000	82.38	0.00	0.0000	0.0000	0.0000	0.00
73	SAGBEND	-260.78	-38.88	5.35	361.15	0.000	0.000	82.32	0.00	0.0000	0.0000	0.0000	0.00
74	SAGBEND	-266.81	-39.42	4.95	367.20	0.000	0.000	82.27	0.00	0.0000	0.0000	0.0000	0.00
75	SAGBEND	-272.83	-39.93	4.55	373.25	0.000	0.000	82.22	0.00	0.0000	0.0000	0.0000	0.00
76	SAGBEND	-278.87	-40.39	4.16	379.30	0.000	0.000	82.18	0.00	0.0000	0.0000	0.0000	0.00
77	SAGBEND	-284.90	-40.80	3.76	385.35	0.000	0.000	82.14	0.00	0.0000	0.0000	0.0000	0.00
78	SAGBEND	-290.94	-41.18	3.36	391.40	0.000	0.000	82.11	0.00	0.0000	0.0000	0.0000	0.00
79	SAGBEND	-296.98	-41.51	2.96	397.45	0.000	0.000	82.07	0.00	0.0000	0.0000	0.0000	0.00
80	SAGBEND	-303.02	-41.80	2.56	403.50	0.000	0.000	82.05	0.00	0.0000	0.0000	0.0000	0.00
81	SAGBEND	-309.07	-42.05	2.16	409.55	0.000	0.000	82.02	0.00	0.0000	0.0000	0.0000	0.00
82	SAGBEND	-315.11	-42.26	1.76	415.60	0.000	0.000	82.00	0.00	0.0000	0.0000	0.0000	0.00
83	SAGBEND	-321.16	-42.43	1.37	421.65	0.000	0.000	81.99	0.00	0.0000	0.0000	0.0000	0.00
84	SAGBEND	-327.21	-42.55	0.97	427.70	0.000	0.000	81.98	0.00	0.0000	0.0000	0.0000	0.00
85	SAGBEND	-333.26	-42.63	0.56	433.75	0.000	0.000	81.97	0.00	0.0000	0.0000	0.0000	0.00
86	SAGBEND	-339.31	-42.67	0.16	439.80	0.109	0.000	81.97	0.01	0.0000	0.0000	0.0000	0.00
87	SEABED	-345.36	-42.67	0.01	445.85	0.513	0.000	81.97	0.01	0.0000	0.0000	0.0000	0.00
88	SEABED	-351.41	-42.67	0.00	451.90	0.570	0.000	81.97	0.00	0.0000	0.0000	0.0000	0.00
89	SEABED	-357.46	-42.67	0.00	457.95	0.572	0.000	81.97	0.00	0.0000	0.0000	0.0000	0.00
90	SEABED	-363.51	-42.67	0.00	464.00	0.572	0.000	81.97	0.00	0.0000	0.0000	0.0000	0.00
91	SEABED	-369.56	-42.67	0.00	470.05	0.572	0.000	81.97	0.00	0.0000	0.0000	0.0000	0.00
92	SEABED	-375.60	-42.67	0.00	476.09	0.572	0.000	81.97	0.00	0.0000	0.0000	0.0000	0.00
93	SEABED	-381.65	-42.67	0.00	482.14	0.572	0.000	81.97	0.00	0.0000	0.0000	0.0000	0.00
94	SEABED	-387.70	-42.67	0.00	488.19	0.572	0.000	81.97	0.00	0.0000	0.0000	0.0000	0.00
95	SEABED	-393.75	-42.67	0.00	494.24	0.572	0.000	81.97	0.00	0.0000	0.0000	0.0000	0.00
96	SEABED	-399.80	-42.67	0.00	500.29	0.572	0.000	81.97	0.00	0.0000	0.0000	0.0000	0.00
97	SEABED	-405.85	-42.67	0.00	506.34	0.572	0.000	81.97	0.00	0.0000	0.0000	0.0000	0.00
98	SEABED	-411.90	-42.67	0.00	512.39	0.572	0.000	81.97	0.00	0.0000	0.0000	0.0000	0.00
99	SEABED	-417.95	-42.67	0.00	518.44	0.572	0.000	81.97	0.00	0.0000	0.0000	0.0000	0.00
100	SEABED	-424.00	-42.67	0.00	524.49	0.572	0.000	81.97	0.00	0.0000	0.0000	0.0000	0.00
101	SEABED	-430.05	-42.67	0.00	530.54	0.572	0.000	81.97	0.00	0.0000	0.0000	0.0000	0.00
102	SEABED	-436.10	-42.67	0.00	536.59	0.572	0.000	81.97	0.00	0.0000	0.0000	0.0000	0.00
103	SEABED	-442.15	-42.67	0.00	542.64	0.572	0.000	81.97	0.00	0.0000	0.0000	0.0000	0.00
104	SEABED	-448.20	-42.67	0.00	548.69	0.572	0.000	81.97	0.00	0.0000	0.0000	0.0000	0.00

S T A T I C P I P E C O O R D I N A T E S, F O R C E S A N D S T R A I N S

NODE NO.	PIPE SECTION	X COORD (M)	Y COORD (M)	VERT ANGLE (DEG)	PIPE LENGTH (M)	SUPPORT REACTION (KN)	SEPARA -TION (M)	AXIAL TENSION (KN)	BENDING MOMENT (KN-M)	TENSILE STRAIN (PCT)	BENDING STRAIN (PCT)	TOTAL STRAIN (PCT)	PERCNT ALLOW (PCT)
105	SEABED	-454.25	-42.67	0.00	554.74	0.572	0.000	81.97	0.00	0.0000	0.0000	0.0000	0.00
106	SEABED	-460.30	-42.67	0.00	560.79	0.572	0.000	81.97	0.00	0.0000	0.0000	0.0000	0.00
107	SEABED	-466.35	-42.67	0.00	566.84	0.572	0.000	81.97	0.00	0.0000	0.0000	0.0000	0.00
108	SEABED	-472.40	-42.67	0.00	572.89	0.572	0.000	81.97	0.00	0.0000	0.0000	0.0000	0.00
109	SEABED	-478.45	-42.67	0.00	578.94	0.572	0.000	81.97	0.00	0.0000	0.0000	0.0000	0.00
110	SEABED	-484.50	-42.67	0.00	584.99	0.572	0.000	81.97	0.00	0.0000	0.0000	0.0000	0.00
111	SEABED	-490.55	-42.67	0.00	591.04	0.572	0.000	81.97	0.00	0.0000	0.0000	0.0000	0.00
112	SEABED	-496.60	-42.67	0.00	597.09	0.572	0.000	81.97	0.00	0.0000	0.0000	0.0000	0.00
113	SEABED	-502.65	-42.67	0.00	603.14	0.572	0.000	81.97	0.00	0.0000	0.0000	0.0000	0.00
114	SEABED	-508.70	-42.67	0.00	609.19	0.572	0.000	81.97	0.00	0.0000	0.0000	0.0000	0.00
115	SEABED	-514.75	-42.67	0.00	615.24	0.572	0.000	81.97	0.00	0.0000	0.0000	0.0000	0.00
116	SEABED	-520.80	-42.67	0.00	621.29	0.572	0.000	81.97	0.00	0.0000	0.0000	0.0000	0.00
117	SEABED	-526.84	-42.67	0.00	627.33	0.572	0.000	81.97	0.00	0.0000	0.0000	0.0000	0.00
118	SEABED	-532.89	-42.67	0.00	633.38	0.572	0.000	81.97	0.00	0.0000	0.0000	0.0000	0.00
119	SEABED	-538.94	-42.67	0.00	639.43	0.572	0.000	81.97	0.00	0.0000	0.0000	0.0000	0.00
120	SEABED	-544.99	-42.67	0.00	645.48	0.572	0.000	81.97	0.00	0.0000	0.0000	0.0000	0.00
121	SEABED	-551.04	-42.67	0.00	651.53	0.572	0.000	81.97	0.00	0.0000	0.0000	0.0000	0.00
122	SEABED	-557.09	-42.67	0.00	657.58	0.572	0.000	81.97	0.00	0.0000	0.0000	0.0000	0.00
123	SEABED	-563.14	-42.67	0.00	663.63	0.572	0.000	81.97	0.00	0.0000	0.0000	0.0000	0.00
124	SEABED	-569.19	-42.67	0.00	669.68	0.572	0.000	81.97	0.00	0.0000	0.0000	0.0000	0.00
125	SEABED	-575.24	-42.67	0.00	675.73	0.572	0.000	81.97	0.00	0.0000	0.0000	0.0000	0.00
126	SEABED	-581.29	-42.67	0.00	681.78	0.572	0.000	81.97	0.00	0.0000	0.0000	0.0000	0.00
127	SEABED	-587.34	-42.67	0.00	687.83	0.572	0.000	81.97	0.00	0.0000	0.0000	0.0000	0.00
128	SEABED	-593.39	-42.67	0.00	693.88	0.572	0.000	81.97	0.00	0.0000	0.0000	0.0000	0.00
129	SEABED	-599.44	-42.67	0.00	699.93	0.572	0.000	81.97	0.00	0.0000	0.0000	0.0000	0.00
130	SEABED	-605.49	-42.67	0.00	705.98	0.572	0.000	81.97	0.00	0.0000	0.0000	0.0000	0.00
131	SEABED	-611.54	-42.67	0.00	712.03	0.572	0.000	81.97	0.00	0.0000	0.0000	0.0000	0.00
132	SEABED	-617.59	-42.67	0.00	718.08	0.572	0.000	81.97	0.00	0.0000	0.0000	0.0000	0.00
133	SEABED	-623.64	-42.67	0.00	724.13	0.572	0.000	81.97	0.00	0.0000	0.0000	0.0000	0.00
134	SEABED	-629.69	-42.67	0.00	730.18	0.572	0.000	81.97	0.00	0.0000	0.0000	0.0000	0.00
135	SEABED	-635.74	-42.67	0.00	736.23	0.572	0.000	81.97	0.00	0.0000	0.0000	0.0000	0.00
136	SEABED	-641.79	-42.67	0.00	742.28	0.465	0.000	81.97	0.00	0.0000	0.0000	0.0000	0.00
137	SEABED	-645.69	-42.67	-0.01	746.18	0.316	0.000	81.97	0.00	0.0000	0.0000	0.0000	0.00
138	SEABED	-649.59	-42.67	-0.11	750.08	0.000	0.000	81.97	0.00	0.0000	0.0000	0.0000	0.00

S T A T I C P I P E C O O R D I N A T E S, F O R C E S A N D S T R A I N S

NODE NO.	PIPE SECTION	X COORD (M)	Y COORD (M)	VERT ANGLE (DEG)	PIPE LENGTH (M)	SUPPORT REACTION (KN)	SEPARA -TION (M)	AXIAL TENSION (KN)	BENDING MOMENT (KN-M)	TENSILE STRAIN (PCT)	BENDING STRAIN (PCT)	TOTAL STRAIN (PCT)	PERCNT ALLOW (PCT)
1	LAYBARGE	96.31	6.41	1.93	0.00	9.932	0.000	0.00	2.74	0.0000	0.0021	0.0021	0.00
3	LAYBARGE	84.28	6.05	1.58	12.04	24.146	0.000	-0.73	-19.20	0.0000	-0.0144	0.0144	0.00
5	LAYBARGE	73.45	5.73	1.90	22.87	24.393	0.000	-1.39	-29.44	-0.0001	-0.0220	0.0221	0.00
7	TENSIONR	60.10	5.24	2.30	36.23	32.088	0.000	214.61	-23.25	0.0100	-0.0174	0.0274	0.00

9	LAYBARGE	51.10	4.87	2.20	45.24	0.000	0.000	213.88	29.37	0.0099	0.0220	0.0319	0.00
10	LAYBARGE	46.45	4.70	1.92	49.89	8.917	0.000	213.57	13.69	0.0099	0.0102	0.0202	0.00
12	LAYBARGE	35.36	4.31	2.62	60.99	34.615	0.000	212.54	-80.77	0.0099	-0.0604	0.0703	0.00
14	LAYBARGE	25.34	3.64	5.24	71.03	46.440	0.000	210.96	-134.27	0.0098	-0.1004	0.1102	0.00
16	LAYBARGE	19.31	3.00	6.54	77.09	0.000	0.000	210.13	-36.59	0.0098	-0.0274	0.0371	0.00
17	LAYBARGE	8.88	1.76	7.14	87.60	33.779	0.000	207.61	-39.34	0.0097	-0.0294	0.0391	0.00
19	LAYBARGE	4.88	1.25	7.27	91.63	0.000	0.000	206.63	17.96	0.0096	0.0134	0.0230	0.00
20	LAYBARGE	3.05	1.02	7.14	93.48	0.000	0.399	206.14	37.94	0.0096	0.0284	0.0380	0.00
24	STINGER	-7.55	-0.16	5.44	104.14	0.000	0.474	203.89	61.58	0.0095	0.0461	0.0555	0.00
26	STINGER	-16.64	-0.95	4.66	113.27	0.000	0.021	203.19	-3.88	0.0094	-0.0029	0.0123	0.00
29	STINGER	-26.51	-1.86	6.65	123.18	53.695	0.000	201.54	-180.69	0.0093	-0.1386	0.1480	0.00
31	STINGER	-37.31	-3.41	8.91	134.09	0.885	0.000	200.72	-14.32	0.0092	-0.0107	0.0200	0.00
33	STINGER	-40.28	-3.87	8.94	137.09	0.000	0.410	200.26	5.46	0.0092	0.0041	0.0134	0.00
35	SAGBEND	-46.47	-4.84	8.69	143.35	0.000	0.000	199.29	20.43	0.0091	0.0153	0.0245	0.00
36	SAGBEND	-49.81	-5.34	8.53	146.73	0.000	0.000	198.79	15.13	0.0091	0.0113	0.0206	0.00
37	SAGBEND	-53.15	-5.84	8.46	150.11	0.000	0.000	198.30	0.00	0.0091	0.0000	0.0092	0.00
38	SAGBEND	-58.45	-6.46	6.70	155.46	0.000	0.000	198.39	0.00	0.0000	0.0000	0.0000	0.00
39	SAGBEND	-64.46	-7.17	6.70	161.51	0.000	0.000	198.39	0.00	0.0000	0.0000	0.0000	0.00
40	SAGBEND	-70.47	-7.88	6.69	167.56	0.000	0.000	198.39	0.00	0.0000	0.0000	0.0000	0.00
41	SAGBEND	-76.48	-8.58	6.69	173.61	0.000	0.000	198.38	0.00	0.0000	0.0000	0.0000	0.00
42	SAGBEND	-82.49	-9.28	6.68	179.66	0.000	0.000	198.38	0.00	0.0000	0.0000	0.0000	0.00
43	SAGBEND	-88.50	-9.99	6.68	185.71	0.000	0.000	198.38	0.00	0.0000	0.0000	0.0000	0.00
44	SAGBEND	-94.51	-10.69	6.68	191.76	0.000	0.000	198.38	0.00	0.0000	0.0000	0.0000	0.00
45	SAGBEND	-100.52	-11.40	6.67	197.81	0.000	0.000	198.38	0.00	0.0000	0.0000	0.0000	0.00
46	SAGBEND	-106.53	-12.10	6.67	203.86	0.000	0.000	198.38	0.00	0.0000	0.0000	0.0000	0.00
47	SAGBEND	-112.53	-12.80	6.66	209.91	0.000	0.000	198.37	0.00	0.0000	0.0000	0.0000	0.00
48	SAGBEND	-118.54	-13.50	6.66	215.96	0.000	0.000	198.37	0.00	0.0000	0.0000	0.0000	0.00
49	SAGBEND	-124.55	-14.20	6.65	222.01	0.000	0.000	198.37	0.00	0.0000	0.0000	0.0000	0.00
50	SAGBEND	-130.56	-14.90	6.65	228.06	0.000	0.000	198.37	0.00	0.0000	0.0000	0.0000	0.00
51	SAGBEND	-136.57	-15.60	6.64	234.11	0.000	0.000	198.37	0.00	0.0000	0.0000	0.0000	0.00
52	SAGBEND	-142.58	-16.30	6.64	240.16	0.000	0.000	198.36	0.00	0.0000	0.0000	0.0000	0.00
53	SAGBEND	-148.59	-17.00	6.63	246.21	0.000	0.000	198.36	0.00	0.0000	0.0000	0.0000	0.00
54	SAGBEND	-154.60	-17.70	6.63	252.26	0.000	0.000	198.36	0.00	0.0000	0.0000	0.0000	0.00
55	SAGBEND	-160.61	-18.40	6.63	258.31	0.000	0.000	198.36	0.00	0.0000	0.0000	0.0000	0.00
56	SAGBEND	-166.62	-19.10	6.62	264.36	0.000	0.000	198.36	0.00	0.0000	0.0000	0.0000	0.00
57	SAGBEND	-172.63	-19.79	6.62	270.41	0.000	0.000	198.36	0.00	0.0000	0.0000	0.0000	0.00
58	SAGBEND	-178.64	-20.49	6.61	276.46	0.000	0.000	198.35	0.00	0.0000	0.0000	0.0000	0.00
59	SAGBEND	-184.65	-21.19	6.61	282.51	0.000	0.000	198.35	0.00	0.0000	0.0000	0.0000	0.00
60	SAGBEND	-190.66	-21.88	6.60	288.56	0.000	0.000	198.35	0.00	0.0000	0.0000	0.0000	0.00

S T A T I C P I P E C O O R D I N A T E S, F O R C E S A N D S T R A I N S

NODE NO.	PIPE SECTION	X COORD (M)	Y COORD (M)	VERT ANGLE (DEG)	PIPE LENGTH (M)	SUPPORT REACTION (KN)	SEPARA -TION (M)	AXIAL TENSION (KN)	BENDING MOMENT (KN-M)	TENSILE STRAIN (PCT)	BENDING STRAIN (PCT)	TOTAL STRAIN (PCT)	PERCNT ALLOW (PCT)
61	SAGBEND	-196.67	-22.58	6.60	294.61	0.000	0.000	198.35	0.00	0.0000	0.0000	0.0000	0.00
62	SAGBEND	-202.68	-23.27	6.59	300.66	0.000	0.000	198.35	0.00	0.0000	0.0000	0.0000	0.00
63	SAGBEND	-208.69	-23.97	6.59	306.71	0.000	0.000	198.34	0.00	0.0000	0.0000	0.0000	0.00
64	SAGBEND	-214.70	-24.66	6.58	312.76	0.000	0.000	198.34	0.00	0.0000	0.0000	0.0000	0.00
65	SAGBEND	-220.71	-25.36	6.58	318.81	0.000	0.000	198.34	0.00	0.0000	0.0000	0.0000	0.00
66	SAGBEND	-226.72	-26.05	6.58	324.86	0.000	0.000	198.34	0.00	0.0000	0.0000	0.0000	0.00
67	SAGBEND	-232.73	-26.74	6.57	330.91	0.000	0.000	198.34	0.00	0.0000	0.0000	0.0000	0.00
68	SAGBEND	-238.74	-27.43	6.57	336.96	0.000	0.000	198.34	0.00	0.0000	0.0000	0.0000	0.00
69	SAGBEND	-244.75	-28.13	6.56	343.01	0.000	0.000	198.33	0.00	0.0000	0.0000	0.0000	0.00
70	SAGBEND	-248.28	-28.53	6.56	346.56	0.000	0.000	198.33	0.00	0.0000	0.0000	0.0000	0.00
71	SAGBEND	-251.81	-28.94	6.56	350.11	0.000	0.000	198.33	0.00	0.0000	0.0000	0.0000	0.00
72	SAGBEND	-256.77	-29.50	6.42	355.11	0.000	0.000	198.28	0.00	0.0000	0.0000	0.0000	0.00
73	SAGBEND	-262.78	-30.17	6.26	361.16	0.000	0.000	198.22	0.00	0.0000	0.0000	0.0000	0.00
74	SAGBEND	-268.80	-30.82	6.09	367.21	0.000	0.000	198.15	0.00	0.0000	0.0000	0.0000	0.00
75	SAGBEND	-274.82	-31.45	5.93	373.26	0.000	0.000	198.09	0.00	0.0000	0.0000	0.0000	0.00
76	SAGBEND	-280.84	-32.07	5.76	379.31	0.000	0.000	198.04	0.00	0.0000	0.0000	0.0000	0.00
77	SAGBEND	-286.86	-32.67	5.60	385.36	0.000	0.000	197.98	0.00	0.0000	0.0000	0.0000	0.00
78	SAGBEND	-292.88	-33.25	5.43	391.41	0.000	0.000	197.92	0.00	0.0000	0.0000	0.0000	0.00
79	SAGBEND	-298.90	-33.81	5.27	397.46	0.000	0.000	197.87	0.00	0.0000	0.0000	0.0000	0.00
80	SAGBEND	-304.93	-34.36	5.11	403.51	0.000	0.000	197.82	0.00	0.0000	0.0000	0.0000	0.00
81	SAGBEND	-310.95	-34.89	4.94	409.56	0.000	0.000	197.77	0.00	0.0000	0.0000	0.0000	0.00
82	SAGBEND	-316.98	-35.40	4.78	415.61	0.000	0.000	197.72	0.00	0.0000	0.0000	0.0000	0.00
83	SAGBEND	-323.01	-35.90	4.61	421.66	0.000	0.000	197.67	0.00	0.0000	0.0000	0.0000	0.00
84	SAGBEND	-329.04	-36.38	4.45	427.71	0.000	0.000	197.63	0.00	0.0000	0.0000	0.0000	0.00
85	SAGBEND	-335.08	-36.84	4.28	433.76	0.000	0.000	197.59	0.00	0.0000	0.0000	0.0000	0.00
86	SAGBEND	-341.11	-37.28	4.11	439.81	0.000	0.000	197.54	0.00	0.0000	0.0000	0.0000	0.00
87	SAGBEND	-347.14	-37.71	3.95	445.86	0.000	0.000	197.50	0.00	0.0000	0.0000	0.0000	0.00
88	SAGBEND	-353.18	-38.11	3.78	451.91	0.000	0.000	197.46	0.00	0.0000	0.0000	0.0000	0.00
89	SAGBEND	-359.22	-38.50	3.62	457.96	0.000	0.000	197.43	0.00	0.0000	0.0000	0.0000	0.00
90	SAGBEND	-365.26	-38.88	3.45	464.01	0.000	0.000	197.39	0.00	0.0000	0.0000	0.0000	0.00
91	SAGBEND	-371.30	-39.23	3.29	470.06	0.000	0.000	197.36	0.00	0.0000	0.0000	0.0000	0.00
92	SAGBEND	-377.34	-39.57	3.12	476.11	0.000	0.000	197.33	0.00	0.0000	0.0000	0.0000	0.00
93	SAGBEND	-383.38	-39.89	2.96	482.16	0.000	0.000	197.30	0.00	0.0000	0.0000	0.0000	0.00
94	SAGBEND	-389.42	-40.19	2.79	488.21	0.000	0.000	197.27	0.00	0.0000	0.0000	0.0000	0.00
95	SAGBEND	-395.46	-40.48	2.62	494.26	0.000	0.000	197.24	0.00	0.0000	0.0000	0.0000	0.00
96	SAGBEND	-401.51	-40.75	2.46	500.31	0.000	0.000	197.22	0.00	0.0000	0.0000	0.0000	0.00
97	SAGBEND	-407.55	-41.00	2.29	506.36	0.000	0.000	197.19	0.00	0.0000	0.0000	0.0000	0.00
98	SAGBEND	-413.60	-41.23	2.13	512.41	0.000	0.000	197.17	0.00	0.0000	0.0000	0.0000	0.00
99	SAGBEND	-419.64	-41.45	1.96	518.46	0.000	0.000	197.15	0.00	0.0000	0.0000	0.0000	0.00
100	SAGBEND	-425.69	-41.65	1.80	524.51	0.000	0.000	197.13	0.00	0.0000	0.0000	0.0000	0.00
101	SAGBEND	-431.74	-41.83	1.63	530.56	0.000	0.000	197.11	0.00	0.0000	0.0000	0.0000	0.00
102	SAGBEND	-437.79	-41.99	1.46	536.61	0.000	0.000	197.10	0.00	0.0000	0.0000	0.0000	0.00
103	SAGBEND	-443.84	-42.14	1.30	542.66	0.000	0.000	197.08	0.00	0.0000	0.0000	0.0000	0.00
104	SAGBEND	-449.88	-42.27	1.13	548.71	0.000	0.000	197.07	0.00	0.0000	0.0000	0.0000	0.00
105	SAGBEND	-455.93	-42.38	0.97	554.76	0.000	0.000	197.06	0.00	0.0000	0.0000	0.0000	0.00

S T A T I C P I P E C O O R D I N A T E S, F O R C E S A N D S T R A I N S

NODE NO.	PIPE SECTION	X COORD (M)	Y COORD (M)	VERT ANGLE (DEG)	PIPE LENGTH (M)	SUPPORT REACTION (KN)	SEPARA -TION (M)	AXIAL TENSION (KN)	BENDING MOMENT (KN-M)	TENSILE STRAIN (PCT)	BENDING STRAIN (PCT)	TOTAL STRAIN (PCT)	PERCNT ALLOW (PCT)
106	SAGBEND	-461.98	-42.47	0.80	560.81	0.000	0.000	197.05	0.00	0.0000	0.0000	0.0000	0.00
107	SAGBEND	-468.03	-42.54	0.63	566.86	0.000	0.000	197.05	0.00	0.0000	0.0000	0.0000	0.00
108	SAGBEND	-474.08	-42.60	0.47	572.91	0.000	0.000	197.04	0.00	0.0000	0.0000	0.0000	0.00
109	SAGBEND	-480.13	-42.64	0.30	578.96	0.000	0.000	197.04	0.00	0.0000	0.0000	0.0000	0.00
110	SAGBEND	-486.18	-42.67	0.14	585.01	0.029	0.000	197.03	0.00	0.0000	0.0000	0.0000	0.00
111	SEABED	-492.23	-42.67	0.02	591.06	0.388	0.000	197.03	0.00	0.0000	0.0000	0.0000	0.00
112	SEABED	-498.28	-42.67	0.00	597.11	0.552	0.000	197.03	0.00	0.0000	0.0000	0.0000	0.00
113	SEABED	-504.33	-42.67	0.00	603.16	0.569	0.000	197.03	0.00	0.0000	0.0000	0.0000	0.00
114	SEABED	-510.38	-42.67	0.00	609.21	0.571	0.000	197.03	0.00	0.0000	0.0000	0.0000	0.00
115	SEABED	-516.43	-42.67	0.00	615.26	0.571	0.000	197.03	0.00	0.0000	0.0000	0.0000	0.00
116	SEABED	-522.48	-42.67	0.00	621.31	0.571	0.000	197.03	0.00	0.0000	0.0000	0.0000	0.00
117	SEABED	-528.53	-42.67	0.00	627.36	0.571	0.000	197.03	0.00	0.0000	0.0000	0.0000	0.00
118	SEABED	-534.58	-42.67	0.00	633.41	0.571	0.000	197.03	0.00	0.0000	0.0000	0.0000	0.00
119	SEABED	-540.63	-42.67	0.00	639.46	0.571	0.000	197.03	0.00	0.0000	0.0000	0.0000	0.00
120	SEABED	-546.68	-42.67	0.00	645.51	0.571	0.000	197.03	0.00	0.0000	0.0000	0.0000	0.00
121	SEABED	-552.73	-42.67	0.00	651.56	0.571	0.000	197.03	0.00	0.0000	0.0000	0.0000	0.00
122	SEABED	-558.78	-42.67	0.00	657.61	0.571	0.000	197.03	0.00	0.0000	0.0000	0.0000	0.00
123	SEABED	-564.83	-42.67	0.00	663.66	0.571	0.000	197.03	0.00	0.0000	0.0000	0.0000	0.00
124	SEABED	-570.88	-42.67	0.00	669.71	0.571	0.000	197.03	0.00	0.0000	0.0000	0.0000	0.00
125	SEABED	-576.93	-42.67	0.00	675.76	0.571	0.000	197.03	0.00	0.0000	0.0000	0.0000	0.00
126	SEABED	-582.98	-42.67	0.00	681.81	0.571	0.000	197.03	0.00	0.0000	0.0000	0.0000	0.00
127	SEABED	-589.03	-42.67	0.00	687.86	0.571	0.000	197.03	0.00	0.0000	0.0000	0.0000	0.00
128	SEABED	-595.08	-42.67	0.00	693.91	0.571	0.000	197.03	0.00	0.0000	0.0000	0.0000	0.00
129	SEABED	-601.13	-42.67	0.00	699.96	0.571	0.000	197.03	0.00	0.0000	0.0000	0.0000	0.00
130	SEABED	-607.18	-42.67	0.00	706.01	0.571	0.000	197.03	0.00	0.0000	0.0000	0.0000	0.00
131	SEABED	-613.23	-42.67	0.00	712.06	0.571	0.000	197.03	0.00	0.0000	0.0000	0.0000	0.00
132	SEABED	-619.28	-42.67	0.00	718.11	0.571	0.000	197.03	0.00	0.0000	0.0000	0.0000	0.00
133	SEABED	-625.33	-42.67	0.00	724.16	0.571	0.000	197.03	0.00	0.0000	0.0000	0.0000	0.00
134	SEABED	-631.38	-42.67	0.00	730.21	0.571	0.000	197.03	0.00	0.0000	0.0000	0.0000	0.00
135	SEABED	-637.43	-42.67	0.00	736.26	0.567	0.000	197.03	0.00	0.0000	0.0000	0.0000	0.00
136	SEABED	-643.48	-42.67	0.00	742.31	0.445	0.000	197.03	0.00	0.0000	0.0000	0.0000	0.00
137	SEABED	-647.39	-42.67	-0.02	746.21	0.270	0.000	197.03	0.00	0.0000	0.0000	0.0000	0.00
138	SEABED	-651.29	-42.67	-0.07	750.12	0.000	0.000	197.03	0.00	0.0000	0.0000	0.0000	0.00

S T A T I C P I P E C O O R D I N A T E S, F O R C E S A N D S T R A I N S

NODE NO.	PIPE SECTION	X COORD (M)	Y COORD (M)	VERT ANGLE (DEG)	PIPE LENGTH (M)	SUPPORT REACTION (KN)	SEPARA -TION (M)	AXIAL TENSION (KN)	BENDING MOMENT (KN-M)	TENSILE STRAIN (PCT)	BENDING STRAIN (PCT)	TOTAL STRAIN (PCT)	PERCNT ALLOW (PCT)
1	LAYBARGE	96.31	6.41	1.93	0.00	9.928	0.000	0.00	2.74	0.0000	0.0021	0.0021	0.00
3	LAYBARGE	84.28	6.05	1.58	12.04	24.175	0.000	-0.73	-19.25	0.0000	-0.0144	0.0144	0.00
5	LAYBARGE	73.45	5.73	1.90	22.87	24.296	0.000	-1.39	-29.25	-0.0001	-0.0219	0.0219	0.00
7	TENSIONR	60.10	5.24	2.31	36.23	32.416	0.000	214.63	-23.74	0.0100	-0.0178	0.0277	0.00
9	LAYBARGE	51.10	4.87	2.20	45.24	0.000	0.000	213.90	30.94	0.0099	0.0231	0.0331	0.00
10	LAYBARGE	46.45	4.70	1.89	49.89	7.115	0.000	213.58	16.32	0.0099	0.0122	0.0221	0.00
12	LAYBARGE	35.36	4.31	2.73	60.99	43.170	0.000	212.49	-88.13	0.0099	-0.0659	0.0758	0.00
14	LAYBARGE	25.34	3.64	4.84	71.03	23.650	0.000	211.28	-83.64	0.0098	-0.0626	0.0724	0.00
16	LAYBARGE	19.31	3.07	5.89	77.09	0.000	0.000	210.23	-61.05	0.0098	-0.0457	0.0554	0.00
17	LAYBARGE	8.89	1.76	9.32	87.60	49.364	0.000	206.25	-239.06	0.0096	-0.7208	0.7304	0.00
19	LAYBARGE	4.92	1.02	11.79	91.63	0.000	0.000	204.96	-234.83	0.0095	-0.5683	0.5779	0.00

20	LAYBARGE	3.11	0.62	12.94	93.48	35.480	0.000	204.01	-248.27	0.0095	-1.2578	1.2673	0.00
24	STINGER	-7.48	-2.35	17.97	104.49	23.468	0.000	201.21	-163.22	0.0093	-0.1226	0.1320	0.00
26	STINGER	-16.10	-5.39	20.71	113.63	7.129	0.000	198.55	-98.41	0.0091	-0.0736	0.0828	0.00
29	STINGER	-25.27	-9.08	23.22	123.51	31.195	0.000	194.71	-128.75	0.0088	-0.0963	0.1053	0.00
31	STINGER	-35.23	-13.58	24.86	134.44	7.969	0.000	190.58	-15.53	0.0085	-0.0116	0.0205	0.00
33	STINGER	-37.95	-14.84	24.86	137.44	0.000	0.421	189.32	14.66	0.0084	0.0110	0.0198	0.00
35	SAGBEND	-43.33	-17.30	24.30	143.35	0.000	0.000	186.80	55.24	0.0082	0.0413	0.0500	0.00
36	SAGBEND	-48.86	-19.75	23.24	149.40	0.000	0.000	184.28	80.18	0.0080	0.0600	0.0685	0.00
37	SAGBEND	-54.45	-22.07	21.86	155.45	0.000	0.000	181.90	95.47	0.0079	0.0714	0.0798	0.00
38	SAGBEND	-60.09	-24.24	20.30	161.50	0.000	0.000	179.69	105.12	0.0077	0.0786	0.0870	0.00
39	SAGBEND	-65.80	-26.26	18.62	167.55	0.000	0.000	177.64	111.32	0.0075	0.0833	0.0915	0.00
40	SAGBEND	-71.56	-28.10	16.86	173.60	0.000	0.000	175.78	115.22	0.0074	0.0862	0.0943	0.00
41	SAGBEND	-77.38	-29.77	15.06	179.65	0.000	0.000	174.11	117.25	0.0073	0.0877	0.0958	0.00
42	SAGBEND	-83.24	-31.25	13.23	185.70	0.000	0.000	172.63	117.37	0.0072	0.0878	0.0958	0.00
43	SAGBEND	-89.15	-32.54	11.43	191.75	0.000	0.000	171.35	115.03	0.0071	0.0860	0.0940	0.00
44	SAGBEND	-95.10	-33.65	9.68	197.80	0.000	0.000	170.28	109.06	0.0070	0.0816	0.0895	0.00
45	SAGBEND	-101.08	-34.58	8.07	203.85	0.000	0.000	169.40	97.33	0.0069	0.0728	0.0806	0.00
46	SAGBEND	-107.08	-35.35	6.71	209.90	0.000	0.000	168.71	76.20	0.0069	0.0570	0.0648	0.00
47	SAGBEND	-113.09	-36.01	5.79	215.95	0.000	0.000	168.15	39.48	0.0068	0.0295	0.0373	0.00
48	SAGBEND	-117.23	-36.42	5.57	220.11	0.000	0.000	167.77	0.00	0.0068	0.0000	0.0079	0.00
49	SAGBEND	-121.20	-36.53	1.70	224.08	0.000	0.000	168.16	0.00	0.0000	0.0000	0.0000	0.00
50	SAGBEND	-125.17	-36.65	1.69	228.05	0.000	0.000	168.16	0.00	0.0000	0.0000	0.0000	0.00
51	SAGBEND	-131.21	-36.83	1.69	234.10	0.000	0.000	168.16	0.00	0.0000	0.0000	0.0000	0.00
52	SAGBEND	-137.26	-37.01	1.68	240.15	0.000	0.000	168.16	0.00	0.0000	0.0000	0.0000	0.00
53	SAGBEND	-143.31	-37.19	1.68	246.20	0.000	0.000	168.15	0.00	0.0000	0.0000	0.0000	0.00
54	SAGBEND	-149.35	-37.36	1.67	252.25	0.000	0.000	168.15	0.00	0.0000	0.0000	0.0000	0.00
55	SAGBEND	-155.40	-37.54	1.67	258.30	0.000	0.000	168.15	0.00	0.0000	0.0000	0.0000	0.00
56	SAGBEND	-161.45	-37.71	1.66	264.35	0.000	0.000	168.15	0.00	0.0000	0.0000	0.0000	0.00
57	SAGBEND	-167.50	-37.89	1.66	270.40	0.000	0.000	168.15	0.00	0.0000	0.0000	0.0000	0.00
58	SAGBEND	-173.54	-38.06	1.65	276.45	0.000	0.000	168.15	0.00	0.0000	0.0000	0.0000	0.00
59	SAGBEND	-179.59	-38.24	1.65	282.50	0.000	0.000	168.15	0.00	0.0000	0.0000	0.0000	0.00
60	SAGBEND	-185.64	-38.41	1.64	288.55	0.000	0.000	168.15	0.00	0.0000	0.0000	0.0000	0.00

S T A T I C P I P E C O O R D I N A T E S, F O R C E S A N D S T R A I N S

NODE NO.	PIPE SECTION	X COORD (M)	Y COORD (M)	VERT ANGLE (DEG)	PIPE LENGTH (M)	SUPPORT REACTION (KN)	SEPARA -TION (M)	AXIAL TENSION (KN)	BENDING MOMENT (KN-M)	TENSILE STRAIN (PCT)	BENDING STRAIN (PCT)	TOTAL STRAIN (PCT)	PERCNT ALLOW (PCT)
61	SAGBEND	-191.68	-38.58	1.63	294.60	0.000	0.000	168.15	0.00	0.0000	0.0000	0.0000	0.00
62	SAGBEND	-197.73	-38.76	1.63	300.65	0.000	0.000	168.15	0.00	0.0000	0.0000	0.0000	0.00
63	SAGBEND	-203.78	-38.93	1.62	306.70	0.000	0.000	168.15	0.00	0.0000	0.0000	0.0000	0.00
64	SAGBEND	-209.82	-39.10	1.62	312.75	0.000	0.000	168.15	0.00	0.0000	0.0000	0.0000	0.00
65	SAGBEND	-215.87	-39.27	1.61	318.80	0.000	0.000	168.15	0.00	0.0000	0.0000	0.0000	0.00
66	SAGBEND	-221.92	-39.44	1.61	324.85	0.000	0.000	168.15	0.00	0.0000	0.0000	0.0000	0.00
67	SAGBEND	-227.97	-39.61	1.60	330.90	0.000	0.000	168.15	0.00	0.0000	0.0000	0.0000	0.00
68	SAGBEND	-234.01	-39.78	1.60	336.95	0.000	0.000	168.15	0.00	0.0000	0.0000	0.0000	0.00
69	SAGBEND	-240.06	-39.95	1.59	342.99	0.000	0.000	168.15	0.00	0.0000	0.0000	0.0000	0.00
70	SAGBEND	-246.11	-40.11	1.59	349.04	0.000	0.000	168.15	0.00	0.0000	0.0000	0.0000	0.00
71	SAGBEND	-252.15	-40.28	1.58	355.09	0.000	0.000	168.15	0.00	0.0000	0.0000	0.0000	0.00
72	SAGBEND	-258.20	-40.45	1.58	361.14	0.000	0.000	168.15	0.00	0.0000	0.0000	0.0000	0.00
73	SAGBEND	-264.25	-40.61	1.57	367.19	0.000	0.000	168.15	0.00	0.0000	0.0000	0.0000	0.00
74	SAGBEND	-270.30	-40.78	1.56	373.24	0.000	0.000	168.15	0.00	0.0000	0.0000	0.0000	0.00
75	SAGBEND	-276.34	-40.95	1.56	379.29	0.000	0.000	168.14	0.00	0.0000	0.0000	0.0000	0.00
76	SAGBEND	-282.39	-41.11	1.55	385.34	0.000	0.000	168.14	0.00	0.0000	0.0000	0.0000	0.00
77	SAGBEND	-288.44	-41.27	1.55	391.39	0.000	0.000	168.14	0.00	0.0000	0.0000	0.0000	0.00
78	SAGBEND	-294.49	-41.44	1.54	397.44	0.000	0.000	168.14	0.00	0.0000	0.0000	0.0000	0.00
79	SAGBEND	-300.53	-41.60	1.54	403.49	0.000	0.000	168.14	0.00	0.0000	0.0000	0.0000	0.00
80	SAGBEND	-306.58	-41.76	1.53	409.54	0.000	0.000	168.14	0.00	0.0000	0.0000	0.0000	0.00
81	SAGBEND	-312.63	-41.92	1.53	415.59	0.000	0.000	168.14	0.00	0.0000	0.0000	0.0000	0.00
82	SAGBEND	-317.13	-42.04	1.52	420.10	0.000	0.000	168.14	0.00	0.0000	0.0000	0.0000	0.00
83	SAGBEND	-320.93	-42.14	1.40	423.89	0.000	0.000	168.13	0.00	0.0000	0.0000	0.0000	0.00
84	SAGBEND	-324.72	-42.23	1.28	427.69	0.000	0.000	168.12	0.00	0.0000	0.0000	0.0000	0.00
85	SAGBEND	-330.77	-42.35	1.08	433.74	0.000	0.000	168.11	0.00	0.0000	0.0000	0.0000	0.00
86	SAGBEND	-336.82	-42.46	0.89	439.79	0.000	0.000	168.10	0.00	0.0000	0.0000	0.0000	0.00
87	SAGBEND	-342.87	-42.54	0.69	445.83	0.000	0.000	168.09	0.00	0.0000	0.0000	0.0000	0.00
88	SAGBEND	-348.92	-42.60	0.50	451.88	0.000	0.000	168.09	0.00	0.0000	0.0000	0.0000	0.00
89	SAGBEND	-354.96	-42.65	0.30	457.93	0.000	0.000	168.08	0.00	0.0000	0.0000	0.0000	0.00
90	SAGBEND	-361.01	-42.67	0.11	463.98	0.079	0.000	168.08	0.00	0.0000	0.0000	0.0000	0.00
91	SEABED	-367.06	-42.67	0.01	470.03	0.465	0.000	168.08	0.00	0.0000	0.0000	0.0000	0.00
92	SEABED	-373.11	-42.67	0.00	476.08	0.562	0.000	168.08	0.00	0.0000	0.0000	0.0000	0.00
93	SEABED	-379.16	-42.67	0.00	482.13	0.571	0.000	168.08	0.00	0.0000	0.0000	0.0000	0.00
94	SEABED	-385.21	-42.67	0.00	488.18	0.571	0.000	168.08	0.00	0.0000	0.0000	0.0000	0.00
95	SEABED	-391.26	-42.67	0.00	494.23	0.571	0.000	168.08	0.00	0.0000	0.0000	0.0000	0.00
96	SEABED	-397.31	-42.67	0.00	500.28	0.571	0.000	168.08	0.00	0.0000	0.0000	0.0000	0.00
97	SEABED	-403.36	-42.67	0.00	506.33	0.571	0.000	168.08	0.00	0.0000	0.0000	0.0000	0.00
98	SEABED	-409.41	-42.67	0.00	512.38	0.571	0.000	168.08	0.00	0.0000	0.0000	0.0000	0.00
99	SEABED	-415.46	-42.67	0.00	518.42	0.571	0.000	168.08	0.00	0.0000	0.0000	0.0000	0.00
100	SEABED	-421.51	-42.67	0.00	524.47	0.571	0.000	168.08	0.00	0.0000	0.0000	0.0000	0.00
101	SEABED	-427.55	-42.67	0.00	530.52	0.571	0.000	168.08	0.00	0.0000	0.0000	0.0000	0.00
102	SEABED	-433.60	-42.67	0.00	536.57	0.571	0.000	168.08	0.00	0.0000	0.0000	0.0000	0.00
103	SEABED	-439.65	-42.67	0.00	542.62	0.571	0.000	168.08	0.00	0.0000	0.0000	0.0000	0.00
104	SEABED	-445.70	-42.67	0.00	548.67	0.571	0.000	168.08	0.00	0.0000	0.0000	0.0000	0.00

S T A T I C P I P E C O O R D I N A T E S, F O R C E S A N D S T R A I N S

NODE NO.	PIPE SECTION	X COORD (M)	Y COORD (M)	VERT ANGLE (DEG)	PIPE LENGTH (M)	SUPPORT REACTION (KN)	SEPARA -TION (M)	AXIAL TENSION (KN)	BENDING MOMENT (KN-M)	TENSILE STRAIN (PCT)	BENDING STRAIN (PCT)	TOTAL STRAIN (PCT)	PERCNT ALLOW (PCT)
105	SEABED	-451.75	-42.67	0.00	554.72	0.571	0.000	168.08	0.00	0.0000	0.0000	0.0000	0.00
106	SEABED	-457.80	-42.67	0.00	560.77	0.571	0.000	168.08	0.00	0.0000	0.0000	0.0000	0.00
107	SEABED	-463.85	-42.67	0.00	566.82	0.571	0.000	168.08	0.00	0.0000	0.0000	0.0000	0.00
108	SEABED	-469.90	-42.67	0.00	572.87	0.571	0.000	168.08	0.00	0.0000	0.0000	0.0000	0.00
109	SEABED	-475.95	-42.67	0.00	578.92	0.571	0.000	168.08	0.00	0.0000	0.0000	0.0000	0.00
110	SEABED	-482.00	-42.67	0.00	584.97	0.571	0.000	168.08	0.00	0.0000	0.0000	0.0000	0.00
111	SEABED	-488.05	-42.67	0.00	591.02	0.571	0.000	168.08	0.00	0.0000	0.0000	0.0000	0.00
112	SEABED	-494.10	-42.67	0.00	597.06	0.571	0.000	168.08	0.00	0.0000	0.0000	0.0000	0.00
113	SEABED	-500.14	-42.67	0.00	603.11	0.571	0.000	168.08	0.00	0.0000	0.0000	0.0000	0.00
114	SEABED	-506.19	-42.67	0.00	609.16	0.571	0.000	168.08	0.00	0.0000	0.0000	0.0000	0.00
115	SEABED	-512.24	-42.67	0.00	615.21	0.571	0.000	168.08	0.00	0.0000	0.0000	0.0000	0.00
116	SEABED	-518.29	-42.67	0.00	621.26	0.571	0.000	168.08	0.00	0.0000	0.0000	0.0000	0.00
117	SEABED	-524.34	-42.67	0.00	627.31	0.571	0.000	168.08	0.00	0.0000	0.0000	0.0000	0.00
118	SEABED	-530.39	-42.67	0.00	633.36	0.571	0.000	168.08	0.00	0.0000	0.0000	0.0000	0.00
119	SEABED	-536.44	-42.67	0.00	639.41	0.571	0.000	168.08	0.00	0.0000	0.0000	0.0000	0.00
120	SEABED	-542.49	-42.67	0.00	645.46	0.571	0.000	168.08	0.00	0.0000	0.0000	0.0000	0.00
121	SEABED	-548.54	-42.67	0.00	651.51	0.571	0.000	168.08	0.00	0.0000	0.0000	0.0000	0.00
122	SEABED	-554.59	-42.67	0.00	657.56	0.571	0.000	168.08	0.00	0.0000	0.0000	0.0000	0.00
123	SEABED	-560.64	-42.67	0.00	663.61	0.571	0.000	168.08	0.00	0.0000	0.0000	0.0000	0.00
124	SEABED	-566.69	-42.67	0.00	669.65	0.571	0.000	168.08	0.00	0.0000	0.0000	0.0000	0.00
125	SEABED	-572.73	-42.67	0.00	675.70	0.571	0.000	168.08	0.00	0.0000	0.0000	0.0000	0.00
126	SEABED	-578.78	-42.67	0.00	681.75	0.571	0.000	168.08	0.00	0.0000	0.0000	0.0000	0.00
127	SEABED	-584.83	-42.67	0.00	687.80	0.571	0.000	168.08	0.00	0.0000	0.0000	0.0000	0.00
128	SEABED	-590.88	-42.67	0.00	693.85	0.571	0.000	168.08	0.00	0.0000	0.0000	0.0000	0.00
129	SEABED	-596.93	-42.67	0.00	699.90	0.571	0.000	168.08	0.00	0.0000	0.0000	0.0000	0.00
130	SEABED	-602.98	-42.67	0.00	705.95	0.571	0.000	168.08	0.00	0.0000	0.0000	0.0000	0.00
131	SEABED	-609.03	-42.67	0.00	712.00	0.571	0.000	168.08	0.00	0.0000	0.0000	0.0000	0.00
132	SEABED	-615.08	-42.67	0.00	718.05	0.571	0.000	168.08	0.00	0.0000	0.0000	0.0000	0.00
133	SEABED	-621.13	-42.67	0.00	724.10	0.571	0.000	168.08	0.00	0.0000	0.0000	0.0000	0.00
134	SEABED	-627.18	-42.67	0.00	730.15	0.571	0.000	168.08	0.00	0.0000	0.0000	0.0000	0.00
135	SEABED	-633.23	-42.67	0.00	736.20	0.571	0.000	168.08	0.00	0.0000	0.0000	0.0000	0.00
136	SEABED	-639.28	-42.67	0.00	742.24	0.571	0.000	168.08	0.00	0.0000	0.0000	0.0000	0.00
137	SEABED	-645.33	-42.67	0.00	748.29	0.571	0.000	168.08	0.00	0.0000	0.0000	0.0000	0.00
138	SEABED	-651.37	-42.67	0.00	754.34	0.571	0.000	168.08	0.00	0.0000	0.0000	0.0000	0.00
139	SEABED	-657.42	-42.67	0.00	760.39	0.571	0.000	168.08	0.00	0.0000	0.0000	0.0000	0.00
140	SEABED	-663.47	-42.67	0.00	766.44	0.571	0.000	168.08	0.00	0.0000	0.0000	0.0000	0.00
141	SEABED	-669.52	-42.67	0.00	772.49	0.571	0.000	168.08	0.00	0.0000	0.0000	0.0000	0.00
142	SEABED	-675.57	-42.67	0.00	778.54	0.571	0.000	168.08	0.00	0.0000	0.0000	0.0000	0.00
143	SEABED	-681.62	-42.67	0.00	784.59	0.571	0.000	168.08	0.00	0.0000	0.0000	0.0000	0.00
144	SEABED	-687.67	-42.67	0.00	790.64	0.571	0.000	168.08	0.00	0.0000	0.0000	0.0000	0.00
145	SEABED	-693.72	-42.67	0.00	796.69	0.571	0.000	168.08	0.00	0.0000	0.0000	0.0000	0.00
146	SEABED	-699.77	-42.67	0.00	802.74	0.571	0.000	168.08	0.00	0.0000	0.0000	0.0000	0.00
147	SEABED	-705.82	-42.67	0.00	808.79	0.563	0.000	168.08	0.00	0.0000	0.0000	0.0000	0.00
148	SEABED	-711.87	-42.67	-0.01	814.84	0.450	0.000	168.08	0.00	0.0000	0.0000	0.0000	0.00
149	SEABED	-717.07	-42.67	-0.08	820.04	0.000	0.000	168.08	0.00	0.0000	0.0000	0.0000	0.00

S T A T I C P I P E C O O R D I N A T E S, F O R C E S A N D S T R A I N S

NODE NO.	PIPE SECTION	X COORD (M)	Y COORD (M)	VERT ANGLE (DEG)	PIPE LENGTH (M)	SUPPORT REACTION (KN)	SEPARA -TION (M)	AXIAL TENSION (KN)	BENDING MOMENT (KN-M)	TENSILE STRAIN (PCT)	BENDING STRAIN (PCT)	TOTAL STRAIN (PCT)	PERCNT ALLOW (PCT)
1	LAYBARGE	96.31	6.41	1.93	0.00	9.929	0.000	0.00	2.74	0.0000	0.0021	0.0021	0.00
3	LAYBARGE	84.28	6.05	1.58	12.04	24.165	0.000	-0.73	-19.23	0.0000	-0.0144	0.0144	0.00
5	LAYBARGE	73.45	5.73	1.90	22.87	24.331	0.000	-1.39	-29.32	-0.0001	-0.0219	0.0220	0.00
7	TENSIONR	60.10	5.24	2.31	36.23	32.360	0.000	252.82	-23.52	0.0118	-0.0176	0.0293	0.00
9	LAYBARGE	51.10	4.87	2.20	45.24	0.000	0.000	252.09	30.37	0.0117	0.0227	0.0344	0.00
10	LAYBARGE	46.45	4.70	1.90	49.89	6.953	0.000	251.77	16.29	0.0117	0.0122	0.0239	0.00
12	LAYBARGE	35.36	4.31	2.72	60.99	43.776	0.000	250.68	-87.59	0.0117	-0.0655	0.0772	0.00

14	LAYBARGE	25.34	3.64	4.87	71.03	27.038	0.000	249.44	-88.84	0.0116	-0.0664	0.0780	0.00
16	LAYBARGE	19.31	3.06	5.94	77.09	0.000	0.000	248.42	-58.16	0.0116	-0.0435	0.0551	0.00
17	LAYBARGE	8.88	1.76	9.17	87.60	74.015	0.000	244.56	-222.19	0.0114	-0.3108	0.3222	0.00
19	LAYBARGE	4.91	1.04	11.02	91.63	0.000	0.000	244.09	-125.72	0.0114	-0.0940	0.1054	0.00
20	LAYBARGE	3.10	0.68	11.53	93.48	0.000	0.061	243.53	-91.57	0.0113	-0.0685	0.0798	0.00
24	STINGER	-7.59	-1.65	12.77	104.42	0.000	0.066	240.68	-31.09	0.0112	-0.0233	0.0344	0.00
26	STINGER	-16.49	-3.76	14.33	113.57	29.652	0.000	238.24	-125.46	0.0110	-0.0938	0.1049	0.00
29	STINGER	-25.99	-6.43	17.03	123.44	22.348	0.000	235.59	-121.16	0.0108	-0.0906	0.1016	0.00
31	STINGER	-36.36	-9.87	19.61	134.37	28.007	0.000	232.25	-100.91	0.0105	-0.0755	0.0863	0.00
33	STINGER	-39.19	-10.90	20.19	137.37	0.000	0.369	231.40	-50.45	0.0105	-0.0377	0.0485	0.00
35	SAGBEND	-44.79	-12.98	20.41	143.35	0.000	0.000	229.37	14.52	0.0103	0.0109	0.0215	0.00
36	SAGBEND	-50.47	-15.07	19.88	149.40	0.000	0.000	227.23	50.74	0.0102	0.0380	0.0485	0.00
37	SAGBEND	-56.18	-17.08	18.92	155.45	0.000	0.000	225.17	70.96	0.0100	0.0531	0.0635	0.00
38	SAGBEND	-61.92	-18.99	17.72	161.50	0.000	0.000	223.23	82.49	0.0099	0.0617	0.0721	0.00
39	SAGBEND	-67.70	-20.76	16.39	167.55	0.000	0.000	221.43	89.20	0.0097	0.0667	0.0770	0.00
40	SAGBEND	-73.53	-22.40	14.97	173.60	0.000	0.000	219.78	93.11	0.0096	0.0696	0.0798	0.00
41	SAGBEND	-79.39	-23.88	13.51	179.65	0.000	0.000	218.28	95.15	0.0095	0.0712	0.0813	0.00
42	SAGBEND	-85.29	-25.22	12.03	185.70	0.000	0.000	216.95	95.61	0.0094	0.0715	0.0816	0.00
43	SAGBEND	-91.23	-26.41	10.55	191.75	0.000	0.000	215.77	94.23	0.0093	0.0705	0.0805	0.00
44	SAGBEND	-97.19	-27.44	9.12	197.80	0.000	0.000	214.76	90.14	0.0092	0.0674	0.0774	0.00
45	SAGBEND	-103.17	-28.33	7.78	203.85	0.000	0.000	213.90	81.52	0.0092	0.0610	0.0709	0.00
46	SAGBEND	-109.17	-29.08	6.63	209.90	0.000	0.000	213.20	65.02	0.0091	0.0486	0.0585	0.00
47	SAGBEND	-115.19	-29.74	5.83	215.95	0.000	0.000	212.62	34.52	0.0091	0.0258	0.0357	0.00
48	SAGBEND	-119.33	-30.15	5.64	220.11	0.000	0.000	212.23	0.00	0.0090	0.0000	0.0099	0.00
49	SAGBEND	-123.29	-30.35	2.90	224.08	0.000	0.000	212.47	0.00	0.0000	0.0000	0.0000	0.00
50	SAGBEND	-127.26	-30.55	2.90	228.05	0.000	0.000	212.47	0.00	0.0000	0.0000	0.0000	0.00
51	SAGBEND	-133.30	-30.86	2.90	234.10	0.000	0.000	212.47	0.00	0.0000	0.0000	0.0000	0.00
52	SAGBEND	-139.34	-31.16	2.89	240.15	0.000	0.000	212.47	0.00	0.0000	0.0000	0.0000	0.00
53	SAGBEND	-145.38	-31.47	2.89	246.20	0.000	0.000	212.47	0.00	0.0000	0.0000	0.0000	0.00
54	SAGBEND	-151.42	-31.77	2.89	252.25	0.000	0.000	212.47	0.00	0.0000	0.0000	0.0000	0.00
55	SAGBEND	-157.47	-32.08	2.88	258.30	0.000	0.000	212.47	0.00	0.0000	0.0000	0.0000	0.00
56	SAGBEND	-163.51	-32.38	2.88	264.35	0.000	0.000	212.47	0.00	0.0000	0.0000	0.0000	0.00
57	SAGBEND	-169.55	-32.68	2.87	270.40	0.000	0.000	212.46	0.00	0.0000	0.0000	0.0000	0.00
58	SAGBEND	-175.59	-32.99	2.87	276.45	0.000	0.000	212.46	0.00	0.0000	0.0000	0.0000	0.00
59	SAGBEND	-181.64	-33.29	2.86	282.50	0.000	0.000	212.46	0.00	0.0000	0.0000	0.0000	0.00
60	SAGBEND	-187.68	-33.59	2.86	288.55	0.000	0.000	212.46	0.00	0.0000	0.0000	0.0000	0.00

S T A T I C P I P E C O O R D I N A T E S, F O R C E S A N D S T R A I N S

NODE NO.	PIPE SECTION	X COORD (M)	Y COORD (M)	VERT ANGLE (DEG)	PIPE LENGTH (M)	SUPPORT REACTION (KN)	SEPARA -TION (M)	AXIAL TENSION (KN)	BENDING MOMENT (KN-M)	TENSILE STRAIN (PCT)	BENDING STRAIN (PCT)	TOTAL STRAIN (PCT)	PERCNT ALLOW (PCT)
61	SAGBEND	-193.72	-33.89	2.86	294.60	0.000	0.000	212.46	0.00	0.0000	0.0000	0.0000	0.00
62	SAGBEND	-199.76	-34.19	2.85	300.65	0.000	0.000	212.46	0.00	0.0000	0.0000	0.0000	0.00
63	SAGBEND	-205.80	-34.50	2.85	306.70	0.000	0.000	212.46	0.00	0.0000	0.0000	0.0000	0.00
64	SAGBEND	-211.85	-34.80	2.84	312.75	0.000	0.000	212.46	0.00	0.0000	0.0000	0.0000	0.00
65	SAGBEND	-217.89	-35.10	2.84	318.80	0.000	0.000	212.46	0.00	0.0000	0.0000	0.0000	0.00
66	SAGBEND	-223.93	-35.39	2.83	324.85	0.000	0.000	212.46	0.00	0.0000	0.0000	0.0000	0.00
67	SAGBEND	-229.97	-35.69	2.83	330.90	0.000	0.000	212.46	0.00	0.0000	0.0000	0.0000	0.00
68	SAGBEND	-236.02	-35.99	2.83	336.95	0.000	0.000	212.46	0.00	0.0000	0.0000	0.0000	0.00
69	SAGBEND	-242.06	-36.29	2.82	343.00	0.000	0.000	212.46	0.00	0.0000	0.0000	0.0000	0.00
70	SAGBEND	-248.10	-36.59	2.82	349.05	0.000	0.000	212.45	0.00	0.0000	0.0000	0.0000	0.00
71	SAGBEND	-254.14	-36.88	2.81	355.10	0.000	0.000	212.45	0.00	0.0000	0.0000	0.0000	0.00
72	SAGBEND	-260.18	-37.18	2.81	361.15	0.000	0.000	212.45	0.00	0.0000	0.0000	0.0000	0.00
73	SAGBEND	-266.23	-37.48	2.80	367.20	0.000	0.000	212.45	0.00	0.0000	0.0000	0.0000	0.00
74	SAGBEND	-272.27	-37.77	2.80	373.25	0.000	0.000	212.45	0.00	0.0000	0.0000	0.0000	0.00
75	SAGBEND	-278.31	-38.07	2.80	379.30	0.000	0.000	212.45	0.00	0.0000	0.0000	0.0000	0.00
76	SAGBEND	-284.35	-38.36	2.79	385.35	0.000	0.000	212.45	0.00	0.0000	0.0000	0.0000	0.00
77	SAGBEND	-290.40	-38.66	2.79	391.40	0.000	0.000	212.45	0.00	0.0000	0.0000	0.0000	0.00
78	SAGBEND	-296.44	-38.95	2.78	397.45	0.000	0.000	212.45	0.00	0.0000	0.0000	0.0000	0.00
79	SAGBEND	-302.48	-39.25	2.78	403.50	0.000	0.000	212.45	0.00	0.0000	0.0000	0.0000	0.00
80	SAGBEND	-308.52	-39.54	2.77	409.55	0.000	0.000	212.45	0.00	0.0000	0.0000	0.0000	0.00
81	SAGBEND	-314.57	-39.83	2.77	415.59	0.000	0.000	212.45	0.00	0.0000	0.0000	0.0000	0.00
82	SAGBEND	-319.07	-40.05	2.77	420.10	0.000	0.000	212.45	0.00	0.0000	0.0000	0.0000	0.00
83	SAGBEND	-322.86	-40.23	2.67	423.90	0.000	0.000	212.43	0.00	0.0000	0.0000	0.0000	0.00
84	SAGBEND	-326.65	-40.40	2.57	427.69	0.000	0.000	212.41	0.00	0.0000	0.0000	0.0000	0.00
85	SAGBEND	-332.70	-40.67	2.42	433.74	0.000	0.000	212.39	0.00	0.0000	0.0000	0.0000	0.00
86	SAGBEND	-338.74	-40.91	2.27	439.79	0.000	0.000	212.36	0.00	0.0000	0.0000	0.0000	0.00
87	SAGBEND	-344.79	-41.14	2.11	445.84	0.000	0.000	212.34	0.00	0.0000	0.0000	0.0000	0.00
88	SAGBEND	-350.83	-41.36	1.96	451.89	0.000	0.000	212.32	0.00	0.0000	0.0000	0.0000	0.00
89	SAGBEND	-356.88	-41.56	1.80	457.94	0.000	0.000	212.30	0.00	0.0000	0.0000	0.0000	0.00
90	SAGBEND	-362.92	-41.74	1.65	463.99	0.000	0.000	212.29	0.00	0.0000	0.0000	0.0000	0.00
91	SAGBEND	-368.97	-41.91	1.50	470.04	0.000	0.000	212.27	0.00	0.0000	0.0000	0.0000	0.00
92	SAGBEND	-375.02	-42.06	1.34	476.09	0.000	0.000	212.26	0.00	0.0000	0.0000	0.0000	0.00
93	SAGBEND	-381.07	-42.19	1.19	482.14	0.000	0.000	212.24	0.00	0.0000	0.0000	0.0000	0.00
94	SAGBEND	-387.12	-42.31	1.03	488.19	0.000	0.000	212.23	0.00	0.0000	0.0000	0.0000	0.00
95	SAGBEND	-393.16	-42.41	0.88	494.24	0.000	0.000	212.22	0.00	0.0000	0.0000	0.0000	0.00
96	SAGBEND	-399.21	-42.49	0.72	500.29	0.000	0.000	212.21	0.00	0.0000	0.0000	0.0000	0.00
97	SAGBEND	-405.26	-42.56	0.57	506.34	0.000	0.000	212.21	0.00	0.0000	0.0000	0.0000	0.00
98	SAGBEND	-411.31	-42.61	0.42	512.39	0.000	0.000	212.20	0.00	0.0000	0.0000	0.0000	0.00
99	SAGBEND	-417.36	-42.65	0.26	518.44	0.000	0.000	212.20	0.00	0.0000	0.0000	0.0000	0.00
100	SAGBEND	-423.41	-42.67	0.11	524.49	0.053	0.000	212.20	0.00	0.0000	0.0000	0.0000	0.00
101	SEABED	-429.46	-42.67	0.01	530.54	0.424	0.000	212.20	0.00	0.0000	0.0000	0.0000	0.00
102	SEABED	-435.51	-42.67	0.00	536.58	0.554	0.000	212.20	0.00	0.0000	0.0000	0.0000	0.00
103	SEABED	-441.56	-42.67	0.00	542.63	0.569	0.000	212.20	0.00	0.0000	0.0000	0.0000	0.00
104	SEABED	-447.61	-42.67	0.00	548.68	0.571	0.000	212.20	0.00	0.0000	0.0000	0.0000	0.00

S T A T I C P I P E C O O R D I N A T E S, F O R C E S A N D S T R A I N S

NODE NO.	PIPE SECTION	X COORD (M)	Y COORD (M)	VERT ANGLE (DEG)	PIPE LENGTH (M)	SUPPORT REACTION (KN)	SEPARA -TION (M)	AXIAL TENSION (KN)	BENDING MOMENT (KN-M)	TENSILE STRAIN (PCT)	BENDING STRAIN (PCT)	TOTAL STRAIN (PCT)	PERCNT ALLOW (PCT)
105	SEABED	-453.66	-42.67	0.00	554.73	0.571	0.000	212.20	0.00	0.0000	0.0000	0.0000	0.00
106	SEABED	-459.71	-42.67	0.00	560.78	0.571	0.000	212.20	0.00	0.0000	0.0000	0.0000	0.00
107	SEABED	-465.76	-42.67	0.00	566.83	0.571	0.000	212.20	0.00	0.0000	0.0000	0.0000	0.00
108	SEABED	-471.81	-42.67	0.00	572.88	0.571	0.000	212.20	0.00	0.0000	0.0000	0.0000	0.00
109	SEABED	-477.86	-42.67	0.00	578.93	0.571	0.000	212.20	0.00	0.0000	0.0000	0.0000	0.00
110	SEABED	-483.91	-42.67	0.00	584.98	0.571	0.000	212.20	0.00	0.0000	0.0000	0.0000	0.00
111	SEABED	-489.95	-42.67	0.00	591.03	0.571	0.000	212.20	0.00	0.0000	0.0000	0.0000	0.00
112	SEABED	-496.00	-42.67	0.00	597.08	0.571	0.000	212.20	0.00	0.0000	0.0000	0.0000	0.00
113	SEABED	-502.05	-42.67	0.00	603.13	0.571	0.000	212.20	0.00	0.0000	0.0000	0.0000	0.00
114	SEABED	-508.10	-42.67	0.00	609.18	0.571	0.000	212.20	0.00	0.0000	0.0000	0.0000	0.00
115	SEABED	-514.15	-42.67	0.00	615.23	0.571	0.000	212.20	0.00	0.0000	0.0000	0.0000	0.00
116	SEABED	-520.20	-42.67	0.00	621.28	0.571	0.000	212.20	0.00	0.0000	0.0000	0.0000	0.00
117	SEABED	-526.25	-42.67	0.00	627.33	0.571	0.000	212.20	0.00	0.0000	0.0000	0.0000	0.00
118	SEABED	-532.30	-42.67	0.00	633.38	0.571	0.000	212.20	0.00	0.0000	0.0000	0.0000	0.00
119	SEABED	-538.35	-42.67	0.00	639.43	0.571	0.000	212.20	0.00	0.0000	0.0000	0.0000	0.00
120	SEABED	-544.40	-42.67	0.00	645.48	0.571	0.000	212.20	0.00	0.0000	0.0000	0.0000	0.00
121	SEABED	-550.45	-42.67	0.00	651.52	0.571	0.000	212.20	0.00	0.0000	0.0000	0.0000	0.00
122	SEABED	-556.50	-42.67	0.00	657.57	0.571	0.000	212.20	0.00	0.0000	0.0000	0.0000	0.00
123	SEABED	-562.55	-42.67	0.00	663.62	0.571	0.000	212.20	0.00	0.0000	0.0000	0.0000	0.00
124	SEABED	-568.60	-42.67	0.00	669.67	0.571	0.000	212.20	0.00	0.0000	0.0000	0.0000	0.00
125	SEABED	-574.65	-42.67	0.00	675.72	0.571	0.000	212.20	0.00	0.0000	0.0000	0.0000	0.00
126	SEABED	-580.70	-42.67	0.00	681.77	0.571	0.000	212.20	0.00	0.0000	0.0000	0.0000	0.00
127	SEABED	-586.75	-42.67	0.00	687.82	0.571	0.000	212.20	0.00	0.0000	0.0000	0.0000	0.00
128	SEABED	-592.80	-42.67	0.00	693.87	0.571	0.000	212.20	0.00	0.0000	0.0000	0.0000	0.00
129	SEABED	-598.85	-42.67	0.00	699.92	0.571	0.000	212.20	0.00	0.0000	0.0000	0.0000	0.00
130	SEABED	-604.90	-42.67	0.00	705.97	0.571	0.000	212.20	0.00	0.0000	0.0000	0.0000	0.00
131	SEABED	-610.94	-42.67	0.00	712.02	0.571	0.000	212.20	0.00	0.0000	0.0000	0.0000	0.00
132	SEABED	-616.99	-42.67	0.00	718.07	0.571	0.000	212.20	0.00	0.0000	0.0000	0.0000	0.00
133	SEABED	-623.04	-42.67	0.00	724.12	0.571	0.000	212.20	0.00	0.0000	0.0000	0.0000	0.00
134	SEABED	-629.09	-42.67	0.00	730.17	0.571	0.000	212.20	0.00	0.0000	0.0000	0.0000	0.00
135	SEABED	-635.14	-42.67	0.00	736.22	0.571	0.000	212.20	0.00	0.0000	0.0000	0.0000	0.00
136	SEABED	-641.19	-42.67	0.00	742.27	0.571	0.000	212.20	0.00	0.0000	0.0000	0.0000	0.00
137	SEABED	-647.24	-42.67	0.00	748.32	0.571	0.000	212.20	0.00	0.0000	0.0000	0.0000	0.00
138	SEABED	-653.29	-42.67	0.00	754.37	0.571	0.000	212.20	0.00	0.0000	0.0000	0.0000	0.00
139	SEABED	-659.34	-42.67	0.00	760.42	0.571	0.000	212.20	0.00	0.0000	0.0000	0.0000	0.00
140	SEABED	-665.39	-42.67	0.00	766.47	0.571	0.000	212.20	0.00	0.0000	0.0000	0.0000	0.00
141	SEABED	-671.44	-42.67	0.00	772.51	0.571	0.000	212.20	0.00	0.0000	0.0000	0.0000	0.00
142	SEABED	-677.49	-42.67	0.00	778.56	0.571	0.000	212.20	0.00	0.0000	0.0000	0.0000	0.00
143	SEABED	-683.54	-42.67	0.00	784.61	0.571	0.000	212.20	0.00	0.0000	0.0000	0.0000	0.00
144	SEABED	-689.59	-42.67	0.00	790.66	0.571	0.000	212.20	0.00	0.0000	0.0000	0.0000	0.00
145	SEABED	-695.64	-42.67	0.00	796.71	0.571	0.000	212.20	0.00	0.0000	0.0000	0.0000	0.00
146	SEABED	-701.69	-42.67	0.00	802.76	0.570	0.000	212.20	0.00	0.0000	0.0000	0.0000	0.00
147	SEABED	-707.74	-42.67	0.00	808.81	0.558	0.000	212.20	0.00	0.0000	0.0000	0.0000	0.00
148	SEABED	-713.79	-42.67	-0.01	814.86	0.435	0.000	212.20	0.00	0.0000	0.0000	0.0000	0.00
149	SEABED	-718.99	-42.67	-0.07	820.07	0.000	0.000	212.20	0.00	0.0000	0.0000	0.0000	0.00

S T A T I C P I P E C O O R D I N A T E S, F O R C E S A N D S T R A I N S

NODE NO.	PIPE SECTION	X COORD (M)	Y COORD (M)	VERT ANGLE (DEG)	PIPE LENGTH (M)	SUPPORT REACTION (KN)	SEPARA -TION (M)	AXIAL TENSION (KN)	BENDING MOMENT (KN-M)	TENSILE STRAIN (PCT)	BENDING STRAIN (PCT)	TOTAL STRAIN (PCT)	PERCNT ALLOW (PCT)
1	LAYBARGE	96.31	6.41	1.93	0.00	9.929	0.000	0.00	2.74	0.0000	0.0021	0.0021	0.00
3	LAYBARGE	84.28	6.05	1.58	12.04	24.168	0.000	-0.73	-19.23	0.0000	-0.0144	0.0144	0.00

5	LAYBARGE	73.45	5.73	1.90	22.87	24.322	0.000	-1.39	-29.30	-0.0001	-0.0219	0.0220	0.00
7	TENSIONR	60.10	5.24	2.31	36.23	32.390	0.000	252.81	-23.56	0.0118	-0.0176	0.0294	0.00
9	LAYBARGE	51.10	4.87	2.20	45.24	0.000	0.000	252.08	30.51	0.0117	0.0228	0.0345	0.00
10	LAYBARGE	46.45	4.70	1.90	49.89	6.783	0.000	251.77	16.54	0.0117	0.0124	0.0241	0.00
12	LAYBARGE	35.36	4.31	2.73	60.99	44.591	0.000	250.67	-88.29	0.0117	-0.0660	0.0777	0.00
14	LAYBARGE	25.34	3.64	4.83	71.03	24.831	0.000	249.46	-84.01	0.0116	-0.0628	0.0744	0.00
16	LAYBARGE	19.31	3.07	5.88	77.09	0.000	0.000	248.42	-60.44	0.0116	-0.0452	0.0568	0.00
17	LAYBARGE	8.89	1.76	9.38	87.60	61.527	0.000	244.33	-245.62	0.0114	-1.0669	1.0782	0.00
19	LAYBARGE	4.92	1.01	11.77	91.63	0.000	0.000	243.40	-209.54	0.0113	-0.2069	0.2183	0.00
20	LAYBARGE	3.11	0.62	12.75	93.48	26.772	0.000	242.62	-208.16	0.0113	-0.2002	0.2115	0.00
24	STINGER	-7.53	-2.21	16.70	104.50	15.049	0.000	239.78	-124.93	0.0111	-0.0934	0.1046	0.00
26	STINGER	-16.23	-5.04	19.41	113.64	23.220	0.000	236.89	-136.10	0.0109	-0.1018	0.1128	0.00
29	STINGER	-25.46	-8.56	22.26	123.52	21.421	0.000	233.45	-122.97	0.0106	-0.0920	0.1028	0.00
31	STINGER	-35.47	-12.94	24.90	134.46	27.669	0.000	229.18	-102.47	0.0103	-0.0766	0.0873	0.00
33	STINGER	-38.19	-14.23	25.49	137.46	0.000	0.367	228.07	-52.40	0.0102	-0.0392	0.0498	0.00
35	SAGBEND	-43.50	-16.78	25.75	143.35	0.000	0.000	225.58	11.63	0.0100	0.0087	0.0192	0.00
36	SAGBEND	-48.96	-19.39	25.26	149.40	0.000	0.000	222.92	48.39	0.0098	0.0362	0.0465	0.00
37	SAGBEND	-54.45	-21.93	24.33	155.45	0.000	0.000	220.33	69.23	0.0096	0.0518	0.0620	0.00
38	SAGBEND	-59.99	-24.37	23.15	161.50	0.000	0.000	217.86	81.48	0.0095	0.0609	0.0711	0.00
39	SAGBEND	-65.58	-26.68	21.82	167.55	0.000	0.000	215.51	89.05	0.0093	0.0666	0.0766	0.00
40	SAGBEND	-71.22	-28.86	20.40	173.60	0.000	0.000	213.32	94.02	0.0091	0.0703	0.0802	0.00
41	SAGBEND	-76.92	-30.90	18.92	179.65	0.000	0.000	211.27	97.53	0.0090	0.0729	0.0827	0.00
42	SAGBEND	-82.67	-32.78	17.38	185.70	0.000	0.000	209.37	100.17	0.0088	0.0749	0.0846	0.00
43	SAGBEND	-88.47	-34.51	15.81	191.75	0.000	0.000	207.64	102.25	0.0087	0.0765	0.0861	0.00
44	SAGBEND	-94.31	-36.08	14.21	197.80	0.000	0.000	206.06	103.92	0.0086	0.0777	0.0873	0.00
45	SAGBEND	-100.19	-37.48	12.59	203.85	0.000	0.000	204.66	105.21	0.0085	0.0787	0.0882	0.00
46	SAGBEND	-106.12	-38.71	10.95	209.90	0.000	0.000	203.42	106.08	0.0084	0.0793	0.0888	0.00
47	SAGBEND	-112.07	-39.78	9.30	215.95	0.000	0.000	202.36	106.37	0.0083	0.0796	0.0889	0.00
48	SAGBEND	-118.06	-40.67	7.66	222.00	0.000	0.000	201.47	105.82	0.0083	0.0791	0.0885	0.00
49	SAGBEND	-124.06	-41.39	6.03	228.05	0.000	0.000	200.76	103.91	0.0082	0.0777	0.0870	0.00
50	SAGBEND	-130.09	-41.94	4.44	234.10	0.000	0.000	200.23	99.76	0.0082	0.0746	0.0839	0.00
51	SAGBEND	-136.12	-42.33	2.95	240.15	0.000	0.000	199.87	91.77	0.0081	0.0686	0.0779	0.00
52	SAGBEND	-142.17	-42.57	1.63	246.20	0.005	0.000	199.69	77.13	0.0081	0.0577	0.0670	0.00
53	SEABED	-148.22	-42.68	0.62	252.25	2.697	0.000	199.65	50.97	0.0081	0.0381	0.0474	0.00
54	SEABED	-154.27	-42.72	0.07	258.30	7.444	0.000	199.69	21.56	0.0081	0.0161	0.0254	0.00
55	SEABED	-160.32	-42.71	-0.13	264.35	6.700	0.000	199.70	7.50	0.0081	0.0056	0.0150	0.00
56	SEABED	-166.08	-42.69	-0.20	270.11	3.795	0.000	199.70	1.08	0.0081	0.0008	0.0102	0.00
57	SEABED	-172.42	-42.67	0.00	276.45	0.704	0.000	199.70	0.17	0.0000	0.0000	0.0000	0.00
58	SEABED	-178.47	-42.67	0.00	282.50	0.086	0.000	199.70	0.03	0.0000	0.0000	0.0000	0.00
59	SEABED	-184.52	-42.67	0.00	288.55	0.023	0.000	199.70	0.00	0.0000	0.0000	0.0000	0.00

S T A T I C P I P E C O O R D I N A T E S, F O R C E S A N D S T R A I N S

NODE NO.	PIPE SECTION	X COORD (M)	Y COORD (M)	VERT ANGLE (DEG)	PIPE LENGTH (M)	SUPPORT REACTION (KN)	SEPARA -TION (M)	AXIAL TENSION (KN)	BENDING MOMENT (KN-M)	TENSILE STRAIN (PCT)	BENDING STRAIN (PCT)	TOTAL STRAIN (PCT)	PERCNT ALLOW (PCT)
60	SEABED	-190.57	-42.67	0.00	294.60	0.017	0.000	199.70	0.00	0.0000	0.0000	0.0000	0.00
61	SEABED	-196.62	-42.67	0.00	300.65	0.016	0.000	199.70	0.00	0.0000	0.0000	0.0000	0.00
62	SEABED	-202.66	-42.67	0.00	306.70	0.016	0.000	199.70	0.00	0.0000	0.0000	0.0000	0.00
63	SEABED	-208.71	-42.67	0.00	312.75	0.016	0.000	199.70	0.00	0.0000	0.0000	0.0000	0.00
64	SEABED	-214.76	-42.67	0.00	318.80	0.016	0.000	199.70	0.00	0.0000	0.0000	0.0000	0.00
65	SEABED	-220.81	-42.67	0.00	324.85	0.016	0.000	199.70	0.00	0.0000	0.0000	0.0000	0.00
66	SEABED	-226.86	-42.67	0.00	330.90	0.016	0.000	199.70	0.00	0.0000	0.0000	0.0000	0.00
67	SEABED	-232.91	-42.67	0.00	336.95	0.016	0.000	199.70	0.00	0.0000	0.0000	0.0000	0.00
68	SEABED	-238.96	-42.67	0.00	343.00	0.016	0.000	199.70	0.00	0.0000	0.0000	0.0000	0.00
69	SEABED	-245.01	-42.67	0.00	349.05	0.016	0.000	199.70	0.00	0.0000	0.0000	0.0000	0.00
70	SEABED	-251.06	-42.67	0.00	355.10	0.016	0.000	199.70	0.00	0.0000	0.0000	0.0000	0.00
71	SEABED	-257.11	-42.67	0.00	361.15	0.016	0.000	199.70	0.00	0.0000	0.0000	0.0000	0.00
72	SEABED	-263.16	-42.67	0.00	367.20	0.016	0.000	199.70	0.00	0.0000	0.0000	0.0000	0.00
73	SEABED	-269.21	-42.67	0.00	373.25	0.016	0.000	199.70	0.00	0.0000	0.0000	0.0000	0.00
74	SEABED	-275.26	-42.67	0.00	379.29	0.016	0.000	199.70	0.00	0.0000	0.0000	0.0000	0.00
75	SEABED	-281.31	-42.67	0.00	385.34	0.016	0.000	199.70	0.00	0.0000	0.0000	0.0000	0.00
76	SEABED	-287.36	-42.67	0.00	391.39	0.016	0.000	199.70	0.00	0.0000	0.0000	0.0000	0.00
77	SEABED	-293.41	-42.67	0.00	397.44	0.016	0.000	199.70	0.00	0.0000	0.0000	0.0000	0.00
78	SEABED	-299.46	-42.67	0.00	403.49	0.016	0.000	199.70	0.00	0.0000	0.0000	0.0000	0.00
79	SEABED	-305.51	-42.67	0.00	409.54	0.016	0.000	199.70	0.00	0.0000	0.0000	0.0000	0.00
80	SEABED	-311.56	-42.67	0.00	415.59	0.016	0.000	199.70	0.00	0.0000	0.0000	0.0000	0.00
81	SEABED	-317.61	-42.67	0.00	421.64	0.016	0.000	199.70	0.00	0.0000	0.0000	0.0000	0.00
82	SEABED	-323.65	-42.67	0.00	427.69	0.016	0.000	199.70	0.00	0.0000	0.0000	0.0000	0.00
83	SEABED	-329.70	-42.67	0.00	433.74	0.016	0.000	199.70	0.00	0.0000	0.0000	0.0000	0.00
84	SEABED	-335.75	-42.67	0.00	439.79	0.016	0.000	199.70	0.00	0.0000	0.0000	0.0000	0.00
85	SEABED	-341.80	-42.67	0.00	445.84	0.016	0.000	199.70	0.00	0.0000	0.0000	0.0000	0.00
86	SEABED	-347.85	-42.67	0.00	451.89	0.016	0.000	199.70	0.00	0.0000	0.0000	0.0000	0.00
87	SEABED	-353.90	-42.67	0.00	457.94	0.020	0.000	199.70	0.00	0.0000	0.0000	0.0000	0.00
88	SEABED	-359.95	-42.67	0.00	463.99	0.031	0.000	199.70	0.00	0.0000	0.0000	0.0000	0.00
89	SEABED	-363.01	-42.67	0.01	467.04	0.057	0.000	199.70	0.00	0.0000	0.0000	0.0000	0.00
90	SEABED	-366.06	-42.67	0.03	470.09	0.260	0.000	199.70	0.00	0.0000	0.0000	0.0000	0.00
91	SEABED	-372.05	-42.67	0.00	476.09	0.527	0.000	199.70	0.00	0.0000	0.0000	0.0000	0.00
92	SEABED	-378.10	-42.67	0.00	482.14	0.567	0.000	199.70	0.00	0.0000	0.0000	0.0000	0.00
93	SEABED	-384.15	-42.67	0.00	488.18	0.571	0.000	199.70	0.00	0.0000	0.0000	0.0000	0.00
94	SEABED	-390.20	-42.67	0.00	494.23	0.571	0.000	199.70	0.00	0.0000	0.0000	0.0000	0.00
95	SEABED	-396.25	-42.67	0.00	500.28	0.571	0.000	199.70	0.00	0.0000	0.0000	0.0000	0.00
96	SEABED	-402.30	-42.67	0.00	506.33	0.571	0.000	199.70	0.00	0.0000	0.0000	0.0000	0.00
97	SEABED	-408.35	-42.67	0.00	512.38	0.571	0.000	199.70	0.00	0.0000	0.0000	0.0000	0.00
98	SEABED	-414.39	-42.67	0.00	518.43	0.571	0.000	199.70	0.00	0.0000	0.0000	0.0000	0.00
99	SEABED	-420.44	-42.67	0.00	524.48	0.571	0.000	199.70	0.00	0.0000	0.0000	0.0000	0.00
100	SEABED	-426.49	-42.67	0.00	530.53	0.571	0.000	199.70	0.00	0.0000	0.0000	0.0000	0.00
101	SEABED	-432.54	-42.67	0.00	536.58	0.571	0.000	199.70	0.00	0.0000	0.0000	0.0000	0.00
102	SEABED	-438.59	-42.67	0.00	542.63	0.571	0.000	199.70	0.00	0.0000	0.0000	0.0000	0.00
103	SEABED	-444.64	-42.67	0.00	548.68	0.571	0.000	199.70	0.00	0.0000	0.0000	0.0000	0.00
104	SEABED	-450.69	-42.67	0.00	554.73	0.571	0.000	199.70	0.00	0.0000	0.0000	0.0000	0.00

S T A T I C P I P E C O O R D I N A T E S, F O R C E S A N D S T R A I N S

NODE NO.	PIPE SECTION	X COORD (M)	Y COORD (M)	VERT ANGLE (DEG)	PIPE LENGTH (M)	SUPPORT REACTION (KN)	SEPARA -TION (M)	AXIAL TENSION (KN)	BENDING MOMENT (KN-M)	TENSILE STRAIN (PCT)	BENDING STRAIN (PCT)	TOTAL STRAIN (PCT)	PERCNT ALLOW (PCT)
105	SEABED	-456.74	-42.67	0.00	560.77	0.571	0.000	199.70	0.00	0.0000	0.0000	0.0000	0.00
106	SEABED	-462.79	-42.67	0.00	566.82	0.571	0.000	199.70	0.00	0.0000	0.0000	0.0000	0.00
107	SEABED	-468.84	-42.67	0.00	572.87	0.571	0.000	199.70	0.00	0.0000	0.0000	0.0000	0.00
108	SEABED	-474.89	-42.67	0.00	578.92	0.571	0.000	199.70	0.00	0.0000	0.0000	0.0000	0.00
109	SEABED	-480.94	-42.67	0.00	584.97	0.571	0.000	199.70	0.00	0.0000	0.0000	0.0000	0.00
110	SEABED	-486.98	-42.67	0.00	591.02	0.571	0.000	199.70	0.00	0.0000	0.0000	0.0000	0.00
111	SEABED	-493.03	-42.67	0.00	597.07	0.571	0.000	199.70	0.00	0.0000	0.0000	0.0000	0.00
112	SEABED	-499.08	-42.67	0.00	603.12	0.571	0.000	199.70	0.00	0.0000	0.0000	0.0000	0.00
113	SEABED	-505.13	-42.67	0.00	609.17	0.571	0.000	199.70	0.00	0.0000	0.0000	0.0000	0.00
114	SEABED	-511.18	-42.67	0.00	615.22	0.571	0.000	199.70	0.00	0.0000	0.0000	0.0000	0.00
115	SEABED	-517.23	-42.67	0.00	621.27	0.571	0.000	199.70	0.00	0.0000	0.0000	0.0000	0.00
116	SEABED	-523.28	-42.67	0.00	627.32	0.571	0.000	199.70	0.00	0.0000	0.0000	0.0000	0.00
117	SEABED	-529.33	-42.67	0.00	633.36	0.571	0.000	199.70	0.00	0.0000	0.0000	0.0000	0.00
118	SEABED	-535.38	-42.67	0.00	639.41	0.571	0.000	199.70	0.00	0.0000	0.0000	0.0000	0.00
119	SEABED	-541.43	-42.67	0.00	645.46	0.571	0.000	199.70	0.00	0.0000	0.0000	0.0000	0.00
120	SEABED	-547.48	-42.67	0.00	651.51	0.571	0.000	199.70	0.00	0.0000	0.0000	0.0000	0.00
121	SEABED	-553.53	-42.67	0.00	657.56	0.571	0.000	199.70	0.00	0.0000	0.0000	0.0000	0.00
122	SEABED	-559.57	-42.67	0.00	663.61	0.571	0.000	199.70	0.00	0.0000	0.0000	0.0000	0.00
123	SEABED	-565.62	-42.67	0.00	669.66	0.571	0.000	199.70	0.00	0.0000	0.0000	0.0000	0.00
124	SEABED	-571.67	-42.67	0.00	675.71	0.571	0.000	199.70	0.00	0.0000	0.0000	0.0000	0.00
125	SEABED	-577.72	-42.67	0.00	681.76	0.571	0.000	199.70	0.00	0.0000	0.0000	0.0000	0.00
126	SEABED	-583.77	-42.67	0.00	687.81	0.571	0.000	199.70	0.00	0.0000	0.0000	0.0000	0.00
127	SEABED	-589.82	-42.67	0.00	693.86	0.571	0.000	199.70	0.00	0.0000	0.0000	0.0000	0.00
128	SEABED	-595.87	-42.67	0.00	699.91	0.571	0.000	199.70	0.00	0.0000	0.0000	0.0000	0.00
129	SEABED	-601.92	-42.67	0.00	705.95	0.571	0.000	199.70	0.00	0.0000	0.0000	0.0000	0.00
130	SEABED	-607.97	-42.67	0.00	712.00	0.571	0.000	199.70	0.00	0.0000	0.0000	0.0000	0.00
131	SEABED	-614.02	-42.67	0.00	718.05	0.571	0.000	199.70	0.00	0.0000	0.0000	0.0000	0.00
132	SEABED	-620.07	-42.67	0.00	724.10	0.571	0.000	199.70	0.00	0.0000	0.0000	0.0000	0.00
133	SEABED	-626.12	-42.67	0.00	730.15	0.571	0.000	199.70	0.00	0.0000	0.0000	0.0000	0.00
134	SEABED	-632.16	-42.67	0.00	736.20	0.571	0.000	199.70	0.00	0.0000	0.0000	0.0000	0.00
135	SEABED	-638.21	-42.67	0.00	742.25	0.571	0.000	199.70	0.00	0.0000	0.0000	0.0000	0.00
136	SEABED	-644.26	-42.67	0.00	748.30	0.571	0.000	199.70	0.00	0.0000	0.0000	0.0000	0.00
137	SEABED	-650.31	-42.67	0.00	754.35	0.571	0.000	199.70	0.00	0.0000	0.0000	0.0000	0.00
138	SEABED	-656.36	-42.67	0.00	760.40	0.571	0.000	199.70	0.00	0.0000	0.0000	0.0000	0.00
139	SEABED	-662.41	-42.67	0.00	766.45	0.571	0.000	199.70	0.00	0.0000	0.0000	0.0000	0.00
140	SEABED	-668.46	-42.67	0.00	772.50	0.571	0.000	199.70	0.00	0.0000	0.0000	0.0000	0.00
141	SEABED	-674.51	-42.67	0.00	778.55	0.571	0.000	199.70	0.00	0.0000	0.0000	0.0000	0.00
142	SEABED	-680.56	-42.67	0.00	784.59	0.571	0.000	199.70	0.00	0.0000	0.0000	0.0000	0.00
143	SEABED	-686.61	-42.67	0.00	790.64	0.571	0.000	199.70	0.00	0.0000	0.0000	0.0000	0.00
144	SEABED	-692.66	-42.67	0.00	796.69	0.571	0.000	199.70	0.00	0.0000	0.0000	0.0000	0.00
145	SEABED	-698.71	-42.67	0.00	802.74	0.571	0.000	199.70	0.00	0.0000	0.0000	0.0000	0.00
146	SEABED	-704.75	-42.67	0.00	808.79	0.571	0.000	199.70	0.00	0.0000	0.0000	0.0000	0.00
147	SEABED	-710.80	-42.67	0.00	814.84	0.571	0.000	199.70	0.00	0.0000	0.0000	0.0000	0.00
148	SEABED	-716.85	-42.67	0.00	820.89	0.571	0.000	199.70	0.00	0.0000	0.0000	0.0000	0.00
149	SEABED	-722.90	-42.67	0.00	826.94	0.571	0.000	199.70	0.00	0.0000	0.0000	0.0000	0.00

S T A T I C P I P E C O O R D I N A T E S, F O R C E S A N D S T R A I N S

NODE	PIPE	X	Y	VERT	PIPE	SUPPORT	SEPARA	AXIAL	BENDING	TENSILE	BENDING	TOTAL	PERCNT

NO.	SECTION	COORD (M)	COORD (M)	ANGLE (DEG)	LENGTH (M)	REACTION (KN)	-TION (M)	TENSION (KN)	MOMENT (KN-M)	STRAIN (PCT)	STRAIN (PCT)	STRAIN (PCT)	ALLOW (PCT)
150	SEABED	-728.95	-42.67	0.00	832.99	0.571	0.000	199.70	0.00	0.0000	0.0000	0.0000	0.00
151	SEABED	-735.00	-42.67	0.00	839.04	0.571	0.000	199.70	0.00	0.0000	0.0000	0.0000	0.00
152	SEABED	-741.05	-42.67	0.00	845.09	0.571	0.000	199.70	0.00	0.0000	0.0000	0.0000	0.00
153	SEABED	-747.10	-42.67	0.00	851.14	0.571	0.000	199.70	0.00	0.0000	0.0000	0.0000	0.00
154	SEABED	-753.15	-42.67	0.00	857.18	0.565	0.000	199.70	0.00	0.0000	0.0000	0.0000	0.00
155	SEABED	-759.20	-42.67	-0.01	863.23	0.414	0.000	199.70	0.00	0.0000	0.0000	0.0000	0.00
156	SEABED	-762.60	-42.67	-0.02	866.64	0.220	0.000	199.70	0.00	0.0000	0.0000	0.0000	0.00
157	SEABED	-766.00	-42.67	-0.07	870.04	0.000	0.000	199.70	0.00	0.0000	0.0000	0.0000	0.00

S T A T I C P I P E C O O R D I N A T E S, F O R C E S A N D S T R A I N S

NODE NO.	PIPE SECTION	X COORD (M)	Y COORD (M)	VERT ANGLE (DEG)	PIPE LENGTH (M)	SUPPORT REACTION (KN)	SEPARA -TION (M)	AXIAL TENSION (KN)	BENDING MOMENT (KN-M)	TENSILE STRAIN (PCT)	BENDING STRAIN (PCT)	TOTAL STRAIN (PCT)	PERCNT ALLOW (PCT)
1	LAYBARGE	96.31	6.41	1.93	0.00	9.929	0.000	0.00	2.74	0.0000	0.0021	0.0021	0.00
3	LAYBARGE	84.28	6.05	1.58	12.04	24.165	0.000	-0.73	-19.23	0.0000	-0.0144	0.0144	0.00
5	LAYBARGE	73.45	5.73	1.90	22.87	24.332	0.000	-1.39	-29.32	-0.0001	-0.0219	0.0220	0.00
7	TENSIONR	60.10	5.24	2.31	36.23	32.380	0.000	266.42	-23.50	0.0124	-0.0176	0.0300	0.00
9	LAYBARGE	51.10	4.87	2.20	45.24	0.000	0.000	265.69	30.35	0.0124	0.0227	0.0351	0.00
10	LAYBARGE	46.45	4.70	1.90	49.89	6.678	0.000	265.37	16.60	0.0123	0.0124	0.0248	0.00
12	LAYBARGE	35.36	4.31	2.73	60.99	45.036	0.000	264.27	-88.29	0.0123	-0.0660	0.0783	0.00
14	LAYBARGE	25.34	3.64	4.84	71.03	25.413	0.000	263.07	-84.50	0.0122	-0.0632	0.0754	0.00
16	LAYBARGE	19.31	3.07	5.88	77.09	0.000	0.000	262.03	-60.06	0.0122	-0.0449	0.0571	0.00
17	LAYBARGE	8.89	1.76	9.39	87.60	63.925	0.000	257.91	-247.03	0.0120	-1.1643	1.1763	0.00
19	LAYBARGE	4.92	1.01	11.76	91.63	0.000	0.000	257.03	-206.30	0.0120	-0.1922	0.2042	0.00
20	LAYBARGE	3.11	0.62	12.73	93.48	25.733	0.000	256.27	-203.09	0.0119	-0.1804	0.1924	0.00
24	STINGER	-7.53	-2.20	16.57	104.49	16.402	0.000	253.41	-123.72	0.0117	-0.0925	0.1043	0.00
26	STINGER	-16.23	-5.00	19.18	113.64	22.502	0.000	250.57	-129.41	0.0115	-0.0968	0.1084	0.00
29	STINGER	-25.48	-8.47	21.89	123.52	21.614	0.000	247.17	-118.32	0.0113	-0.0885	0.1000	0.00
31	STINGER	-35.53	-12.78	24.42	134.45	27.670	0.000	242.96	-99.42	0.0110	-0.0744	0.0856	0.00
33	STINGER	-38.26	-14.04	24.99	137.46	0.000	0.370	241.87	-50.22	0.0109	-0.0376	0.0488	0.00
35	SAGBEND	-43.60	-16.55	25.23	143.35	0.000	0.000	239.42	11.97	0.0107	0.0090	0.0201	0.00
36	SAGBEND	-49.08	-19.11	24.74	149.40	0.000	0.000	236.81	46.93	0.0105	0.0351	0.0461	0.00
37	SAGBEND	-54.59	-21.60	23.85	155.45	0.000	0.000	234.28	66.37	0.0103	0.0496	0.0605	0.00
38	SAGBEND	-60.15	-23.99	22.73	161.50	0.000	0.000	231.85	77.57	0.0101	0.0580	0.0688	0.00
39	SAGBEND	-65.76	-26.27	21.47	167.55	0.000	0.000	229.55	84.35	0.0100	0.0631	0.0737	0.00
40	SAGBEND	-71.41	-28.42	20.12	173.60	0.000	0.000	227.39	88.74	0.0098	0.0664	0.0769	0.00
41	SAGBEND	-77.12	-30.43	18.72	179.65	0.000	0.000	225.36	91.82	0.0097	0.0687	0.0791	0.00
42	SAGBEND	-82.87	-32.30	17.28	185.70	0.000	0.000	223.49	94.13	0.0095	0.0704	0.0808	0.00
43	SAGBEND	-88.67	-34.02	15.80	191.75	0.000	0.000	221.76	95.97	0.0094	0.0718	0.0821	0.00
44	SAGBEND	-94.51	-35.59	14.30	197.80	0.000	0.000	220.18	97.47	0.0093	0.0729	0.0831	0.00
45	SAGBEND	-100.39	-37.01	12.78	203.85	0.000	0.000	218.76	98.69	0.0092	0.0738	0.0840	0.00
46	SAGBEND	-106.31	-38.27	11.24	209.90	0.000	0.000	217.50	99.61	0.0091	0.0745	0.0846	0.00
47	SAGBEND	-112.26	-39.37	9.69	215.95	0.000	0.000	216.40	100.14	0.0090	0.0749	0.0849	0.00
48	SAGBEND	-118.24	-40.31	8.14	222.00	0.000	0.000	215.46	100.11	0.0089	0.0749	0.0849	0.00
49	SAGBEND	-124.24	-41.08	6.59	228.05	0.000	0.000	214.69	99.18	0.0089	0.0742	0.0841	0.00
50	SAGBEND	-130.25	-41.70	5.07	234.10	0.000	0.000	214.09	96.78	0.0088	0.0724	0.0823	0.00
51	SAGBEND	-136.29	-42.15	3.61	240.15	0.000	0.000	213.65	91.82	0.0088	0.0687	0.0786	0.00
52	SAGBEND	-142.33	-42.46	2.25	246.20	0.000	0.000	213.38	82.38	0.0088	0.0616	0.0715	0.00
53	SAGBEND	-148.38	-42.63	1.09	252.25	0.342	0.000	213.27	64.96	0.0088	0.0486	0.0585	0.00
54	SEABED	-154.43	-42.70	0.30	258.30	5.061	0.000	213.28	36.12	0.0088	0.0270	0.0369	0.00
55	SEABED	-160.48	-42.71	-0.07	264.35	6.761	0.000	213.30	13.59	0.0088	0.0102	0.0201	0.00
56	SEABED	-166.23	-42.70	-0.18	270.11	4.456	0.000	213.31	1.54	0.0088	0.0012	0.0112	0.00
57	SEABED	-172.57	-42.67	0.01	276.45	0.903	0.000	213.30	0.24	0.0000	0.0000	0.0000	0.00
58	SEABED	-178.62	-42.67	0.01	282.50	0.113	0.000	213.30	0.04	0.0000	0.0000	0.0000	0.00
59	SEABED	-184.67	-42.67	0.00	288.55	0.027	0.000	213.30	0.01	0.0000	0.0000	0.0000	0.00

S T A T I C P I P E C O O R D I N A T E S, F O R C E S A N D S T R A I N S

NODE NO.	PIPE SECTION	X COORD (M)	Y COORD (M)	VERT ANGLE (DEG)	PIPE LENGTH (M)	SUPPORT REACTION (KN)	SEPARA -TION (M)	AXIAL TENSION (KN)	BENDING MOMENT (KN-M)	TENSILE STRAIN (PCT)	BENDING STRAIN (PCT)	TOTAL STRAIN (PCT)	PERCNT ALLOW (PCT)
60	SEABED	-190.72	-42.67	0.00	294.60	0.017	0.000	213.30	0.00	0.0000	0.0000	0.0000	0.00
61	SEABED	-196.77	-42.67	0.00	300.65	0.016	0.000	213.30	0.00	0.0000	0.0000	0.0000	0.00
62	SEABED	-202.82	-42.67	0.00	306.70	0.016	0.000	213.30	0.00	0.0000	0.0000	0.0000	0.00
63	SEABED	-208.87	-42.67	0.00	312.75	0.016	0.000	213.30	0.00	0.0000	0.0000	0.0000	0.00
64	SEABED	-214.92	-42.67	0.00	318.80	0.016	0.000	213.30	0.00	0.0000	0.0000	0.0000	0.00
65	SEABED	-220.97	-42.67	0.00	324.85	0.016	0.000	213.30	0.00	0.0000	0.0000	0.0000	0.00
66	SEABED	-227.02	-42.67	0.00	330.90	0.016	0.000	213.30	0.00	0.0000	0.0000	0.0000	0.00
67	SEABED	-233.07	-42.67	0.00	336.95	0.016	0.000	213.30	0.00	0.0000	0.0000	0.0000	0.00
68	SEABED	-239.12	-42.67	0.00	343.00	0.016	0.000	213.30	0.00	0.0000	0.0000	0.0000	0.00
69	SEABED	-245.17	-42.67	0.00	349.05	0.016	0.000	213.30	0.00	0.0000	0.0000	0.0000	0.00
70	SEABED	-251.22	-42.67	0.00	355.10	0.016	0.000	213.30	0.00	0.0000	0.0000	0.0000	0.00
71	SEABED	-257.27	-42.67	0.00	361.15	0.016	0.000	213.30	0.00	0.0000	0.0000	0.0000	0.00
72	SEABED	-263.32	-42.67	0.00	367.20	0.016	0.000	213.30	0.00	0.0000	0.0000	0.0000	0.00
73	SEABED	-269.37	-42.67	0.00	373.25	0.016	0.000	213.30	0.00	0.0000	0.0000	0.0000	0.00
74	SEABED	-275.42	-42.67	0.00	379.29	0.016	0.000	213.30	0.00	0.0000	0.0000	0.0000	0.00
75	SEABED	-281.47	-42.67	0.00	385.34	0.016	0.000	213.30	0.00	0.0000	0.0000	0.0000	0.00
76	SEABED	-287.52	-42.67	0.00	391.39	0.016	0.000	213.30	0.00	0.0000	0.0000	0.0000	0.00
77	SEABED	-293.56	-42.67	0.00	397.44	0.016	0.000	213.30	0.00	0.0000	0.0000	0.0000	0.00
78	SEABED	-299.61	-42.67	0.00	403.49	0.016	0.000	213.30	0.00	0.0000	0.0000	0.0000	0.00
79	SEABED	-305.66	-42.67	0.00	409.54	0.016	0.000	213.30	0.00	0.0000	0.0000	0.0000	0.00
80	SEABED	-311.71	-42.67	0.00	415.59	0.016	0.000	213.30	0.00	0.0000	0.0000	0.0000	0.00
81	SEABED	-317.76	-42.67	0.00	421.64	0.016	0.000	213.30	0.00	0.0000	0.0000	0.0000	0.00
82	SEABED	-323.81	-42.67	0.00	427.69	0.016	0.000	213.30	0.00	0.0000	0.0000	0.0000	0.00
83	SEABED	-329.86	-42.67	0.00	433.74	0.016	0.000	213.30	0.00	0.0000	0.0000	0.0000	0.00
84	SEABED	-335.91	-42.67	0.00	439.79	0.016	0.000	213.30	0.00	0.0000	0.0000	0.0000	0.00
85	SEABED	-341.96	-42.67	0.00	445.84	0.016	0.000	213.30	0.00	0.0000	0.0000	0.0000	0.00
86	SEABED	-348.01	-42.67	0.00	451.89	0.016	0.000	213.30	0.00	0.0000	0.0000	0.0000	0.00
87	SEABED	-354.06	-42.67	0.00	457.94	0.021	0.000	213.30	0.00	0.0000	0.0000	0.0000	0.00
88	SEABED	-360.11	-42.67	0.00	463.99	0.032	0.000	213.30	0.00	0.0000	0.0000	0.0000	0.00
89	SEABED	-363.16	-42.67	0.01	467.04	0.059	0.000	213.30	0.00	0.0000	0.0000	0.0000	0.00
90	SEABED	-366.22	-42.67	0.03	470.09	0.260	0.000	213.30	0.00	0.0000	0.0000	0.0000	0.00
91	SEABED	-372.21	-42.67	0.00	476.09	0.525	0.000	213.30	0.00	0.0000	0.0000	0.0000	0.00
92	SEABED	-378.26	-42.67	0.00	482.14	0.566	0.000	213.30	0.00	0.0000	0.0000	0.0000	0.00
93	SEABED	-384.31	-42.67	0.00	488.18	0.571	0.000	213.30	0.00	0.0000	0.0000	0.0000	0.00
94	SEABED	-390.36	-42.67	0.00	494.23	0.571	0.000	213.30	0.00	0.0000	0.0000	0.0000	0.00
95	SEABED	-396.40	-42.67	0.00	500.28	0.571	0.000	213.30	0.00	0.0000	0.0000	0.0000	0.00
96	SEABED	-402.45	-42.67	0.00	506.33	0.571	0.000	213.30	0.00	0.0000	0.0000	0.0000	0.00
97	SEABED	-408.50	-42.67	0.00	512.38	0.571	0.000	213.30	0.00	0.0000	0.0000	0.0000	0.00
98	SEABED	-414.55	-42.67	0.00	518.43	0.571	0.000	213.30	0.00	0.0000	0.0000	0.0000	0.00
99	SEABED	-420.60	-42.67	0.00	524.48	0.571	0.000	213.30	0.00	0.0000	0.0000	0.0000	0.00
100	SEABED	-426.65	-42.67	0.00	530.53	0.571	0.000	213.30	0.00	0.0000	0.0000	0.0000	0.00
101	SEABED	-432.70	-42.67	0.00	536.58	0.571	0.000	213.30	0.00	0.0000	0.0000	0.0000	0.00
102	SEABED	-438.75	-42.67	0.00	542.63	0.571	0.000	213.30	0.00	0.0000	0.0000	0.0000	0.00
103	SEABED	-444.80	-42.67	0.00	548.68	0.571	0.000	213.30	0.00	0.0000	0.0000	0.0000	0.00
104	SEABED	-450.85	-42.67	0.00	554.73	0.571	0.000	213.30	0.00	0.0000	0.0000	0.0000	0.00

S T A T I C P I P E C O O R D I N A T E S, F O R C E S A N D S T R A I N S

NODE NO.	PIPE SECTION	X COORD (M)	Y COORD (M)	VERT ANGLE (DEG)	PIPE LENGTH (M)	SUPPORT REACTION (KN)	SEPARA -TION (M)	AXIAL TENSION (KN)	BENDING MOMENT (KN-M)	TENSILE STRAIN (PCT)	BENDING STRAIN (PCT)	TOTAL STRAIN (PCT)	PERCNT ALLOW (PCT)
105	SEABED	-456.90	-42.67	0.00	560.77	0.571	0.000	213.30	0.00	0.0000	0.0000	0.0000	0.00
106	SEABED	-462.95	-42.67	0.00	566.82	0.571	0.000	213.30	0.00	0.0000	0.0000	0.0000	0.00
107	SEABED	-468.99	-42.67	0.00	572.87	0.571	0.000	213.30	0.00	0.0000	0.0000	0.0000	0.00
108	SEABED	-475.04	-42.67	0.00	578.92	0.571	0.000	213.30	0.00	0.0000	0.0000	0.0000	0.00
109	SEABED	-481.09	-42.67	0.00	584.97	0.571	0.000	213.30	0.00	0.0000	0.0000	0.0000	0.00
110	SEABED	-487.14	-42.67	0.00	591.02	0.571	0.000	213.30	0.00	0.0000	0.0000	0.0000	0.00
111	SEABED	-493.19	-42.67	0.00	597.07	0.571	0.000	213.30	0.00	0.0000	0.0000	0.0000	0.00
112	SEABED	-499.24	-42.67	0.00	603.12	0.571	0.000	213.30	0.00	0.0000	0.0000	0.0000	0.00
113	SEABED	-505.29	-42.67	0.00	609.17	0.571	0.000	213.30	0.00	0.0000	0.0000	0.0000	0.00
114	SEABED	-511.34	-42.67	0.00	615.22	0.571	0.000	213.30	0.00	0.0000	0.0000	0.0000	0.00
115	SEABED	-517.39	-42.67	0.00	621.27	0.571	0.000	213.30	0.00	0.0000	0.0000	0.0000	0.00
116	SEABED	-523.44	-42.67	0.00	627.32	0.571	0.000	213.30	0.00	0.0000	0.0000	0.0000	0.00
117	SEABED	-529.49	-42.67	0.00	633.36	0.571	0.000	213.30	0.00	0.0000	0.0000	0.0000	0.00
118	SEABED	-535.54	-42.67	0.00	639.41	0.571	0.000	213.30	0.00	0.0000	0.0000	0.0000	0.00
119	SEABED	-541.58	-42.67	0.00	645.46	0.571	0.000	213.30	0.00	0.0000	0.0000	0.0000	0.00
120	SEABED	-547.63	-42.67	0.00	651.51	0.571	0.000	213.30	0.00	0.0000	0.0000	0.0000	0.00
121	SEABED	-553.68	-42.67	0.00	657.56	0.571	0.000	213.30	0.00	0.0000	0.0000	0.0000	0.00
122	SEABED	-559.73	-42.67	0.00	663.61	0.571	0.000	213.30	0.00	0.0000	0.0000	0.0000	0.00
123	SEABED	-565.78	-42.67	0.00	669.66	0.571	0.000	213.30	0.00	0.0000	0.0000	0.0000	0.00
124	SEABED	-571.83	-42.67	0.00	675.71	0.571	0.000	213.30	0.00	0.0000	0.0000	0.0000	0.00
125	SEABED	-577.88	-42.67	0.00	681.76	0.571	0.000	213.30	0.00	0.0000	0.0000	0.0000	0.00
126	SEABED	-583.93	-42.67	0.00	687.81	0.571	0.000	213.30	0.00	0.0000	0.0000	0.0000	0.00
127	SEABED	-589.98	-42.67	0.00	693.86	0.571	0.000	213.30	0.00	0.0000	0.0000	0.0000	0.00
128	SEABED	-596.03	-42.67	0.00	699.91	0.571	0.000	213.30	0.00	0.0000	0.0000	0.0000	0.00
129	SEABED	-602.08	-42.67	0.00	705.96	0.571	0.000	213.30	0.00	0.0000	0.0000	0.0000	0.00
130	SEABED	-608.13	-42.67	0.00	712.00	0.571	0.000	213.30	0.00	0.0000	0.0000	0.0000	0.00
131	SEABED	-614.17	-42.67	0.00	718.05	0.571	0.000	213.30	0.00	0.0000	0.0000	0.0000	0.00
132	SEABED	-620.22	-42.67	0.00	724.10	0.571	0.000	213.30	0.00	0.0000	0.0000	0.0000	0.00
133	SEABED	-626.27	-42.67	0.00	730.15	0.571	0.000	213.30	0.00	0.0000	0.0000	0.0000	0.00

134	SEABED	-632.32	-42.67	0.00	736.20	0.571	0.000	213.30	0.00	0.0000	0.0000	0.0000	0.00
135	SEABED	-638.37	-42.67	0.00	742.25	0.571	0.000	213.30	0.00	0.0000	0.0000	0.0000	0.00
136	SEABED	-644.42	-42.67	0.00	748.30	0.571	0.000	213.30	0.00	0.0000	0.0000	0.0000	0.00
137	SEABED	-650.47	-42.67	0.00	754.35	0.571	0.000	213.30	0.00	0.0000	0.0000	0.0000	0.00
138	SEABED	-656.52	-42.67	0.00	760.40	0.571	0.000	213.30	0.00	0.0000	0.0000	0.0000	0.00
139	SEABED	-662.57	-42.67	0.00	766.45	0.571	0.000	213.30	0.00	0.0000	0.0000	0.0000	0.00
140	SEABED	-668.62	-42.67	0.00	772.50	0.571	0.000	213.30	0.00	0.0000	0.0000	0.0000	0.00
141	SEABED	-674.67	-42.67	0.00	778.55	0.571	0.000	213.30	0.00	0.0000	0.0000	0.0000	0.00
142	SEABED	-680.72	-42.67	0.00	784.59	0.571	0.000	213.30	0.00	0.0000	0.0000	0.0000	0.00
143	SEABED	-686.76	-42.67	0.00	790.64	0.571	0.000	213.30	0.00	0.0000	0.0000	0.0000	0.00
144	SEABED	-692.81	-42.67	0.00	796.69	0.571	0.000	213.30	0.00	0.0000	0.0000	0.0000	0.00
145	SEABED	-698.86	-42.67	0.00	802.74	0.571	0.000	213.30	0.00	0.0000	0.0000	0.0000	0.00
146	SEABED	-704.91	-42.67	0.00	808.79	0.571	0.000	213.30	0.00	0.0000	0.0000	0.0000	0.00
147	SEABED	-710.96	-42.67	0.00	814.84	0.571	0.000	213.30	0.00	0.0000	0.0000	0.0000	0.00
148	SEABED	-717.01	-42.67	0.00	820.89	0.571	0.000	213.30	0.00	0.0000	0.0000	0.0000	0.00
149	SEABED	-723.06	-42.67	0.00	826.94	0.571	0.000	213.30	0.00	0.0000	0.0000	0.0000	0.00

S T A T I C P I P E C O O R D I N A T E S, F O R C E S A N D S T R A I N S

NODE NO.	PIPE SECTION	X COORD (M)	Y COORD (M)	VERT ANGLE (DEG)	PIPE LENGTH (M)	SUPPORT REACTION (KN)	SEPARA -TION (M)	AXIAL TENSION (KN)	BENDING MOMENT (KN-M)	TENSILE STRAIN (PCT)	BENDING STRAIN (PCT)	TOTAL STRAIN (PCT)	PERCNT ALLOW (PCT)
150	SEABED	-729.11	-42.67	0.00	832.99	0.571	0.000	213.30	0.00	0.0000	0.0000	0.0000	0.00
151	SEABED	-735.16	-42.67	0.00	839.04	0.571	0.000	213.30	0.00	0.0000	0.0000	0.0000	0.00
152	SEABED	-741.21	-42.67	0.00	845.09	0.571	0.000	213.30	0.00	0.0000	0.0000	0.0000	0.00
153	SEABED	-747.26	-42.67	0.00	851.14	0.570	0.000	213.30	0.00	0.0000	0.0000	0.0000	0.00
154	SEABED	-753.31	-42.67	0.00	857.18	0.564	0.000	213.30	0.00	0.0000	0.0000	0.0000	0.00
155	SEABED	-759.35	-42.67	-0.01	863.23	0.411	0.000	213.30	0.00	0.0000	0.0000	0.0000	0.00
156	SEABED	-762.76	-42.67	-0.02	866.64	0.217	0.000	213.30	0.00	0.0000	0.0000	0.0000	0.00
157	SEABED	-766.16	-42.67	-0.07	870.04	0.000	0.000	213.30	0.00	0.0000	0.0000	0.0000	0.00

S T A T I C P I P E C O O R D I N A T E S, F O R C E S A N D S T R A I N S

NODE NO.	PIPE SECTION	X COORD (M)	Y COORD (M)	VERT ANGLE (DEG)	PIPE LENGTH (M)	SUPPORT REACTION (KN)	SEPARA -TION (M)	AXIAL TENSION (KN)	BENDING MOMENT (KN-M)	TENSILE STRAIN (PCT)	BENDING STRAIN (PCT)	TOTAL STRAIN (PCT)	PERCNT ALLOW (PCT)
1	LAYBARGE	96.31	6.41	1.93	0.00	9.929	0.000	0.00	2.74	0.0000	0.0021	0.0021	0.00
3	LAYBARGE	84.28	6.05	1.58	12.04	24.165	0.000	-0.73	-19.23	0.0000	-0.0144	0.0144	0.00
5	LAYBARGE	73.45	5.73	1.90	22.87	24.332	0.000	-1.39	-29.32	-0.0001	-0.0219	0.0220	0.00
7	TENSIONR	60.10	5.24	2.31	36.23	32.380	0.000	266.42	-23.50	0.0124	-0.0176	0.0300	0.00
9	LAYBARGE	51.10	4.87	2.20	45.24	0.000	0.000	265.69	30.35	0.0124	0.0227	0.0351	0.00
10	LAYBARGE	46.45	4.70	1.90	49.89	6.678	0.000	265.37	16.60	0.0123	0.0124	0.0248	0.00
12	LAYBARGE	35.36	4.31	2.73	60.99	45.037	0.000	264.27	-88.29	0.0123	-0.0660	0.0783	0.00
14	LAYBARGE	25.34	3.64	4.84	71.03	25.412	0.000	263.06	-84.50	0.0122	-0.0632	0.0754	0.00
16	LAYBARGE	19.31	3.07	5.88	77.09	0.000	0.000	262.02	-60.06	0.0122	-0.0449	0.0571	0.00
17	LAYBARGE	8.89	1.76	9.39	87.60	63.934	0.000	257.91	-247.03	0.0120	-1.1646	1.1766	0.00
19	LAYBARGE	4.92	1.01	11.76	91.63	0.000	0.000	257.03	-206.27	0.0120	-0.1921	0.2040	0.00
20	LAYBARGE	3.11	0.62	12.73	93.48	25.718	0.000	256.27	-203.04	0.0119	-0.1803	0.1922	0.00
24	STINGER	-7.53	-2.20	16.57	104.49	16.393	0.000	253.41	-123.70	0.0117	-0.0925	0.1043	0.00
26	STINGER	-16.23	-5.00	19.18	113.63	22.505	0.000	250.57	-129.39	0.0115	-0.0968	0.1084	0.00
29	STINGER	-25.48	-8.47	21.89	123.52	21.615	0.000	247.17	-118.30	0.0113	-0.0885	0.1000	0.00
31	STINGER	-35.53	-12.78	24.42	134.45	27.670	0.000	242.96	-99.42	0.0110	-0.0744	0.0856	0.00
33	STINGER	-38.26	-14.04	24.98	137.46	0.000	0.370	241.87	-50.21	0.0109	-0.0375	0.0488	0.00
35	SAGBEND	-43.60	-16.55	25.23	143.35	0.000	0.000	239.41	11.97	0.0107	0.0090	0.0201	0.00
36	SAGBEND	-49.08	-19.10	24.74	149.40	0.000	0.000	236.81	46.93	0.0105	0.0351	0.0461	0.00
37	SAGBEND	-54.59	-21.60	23.85	155.45	0.000	0.000	234.27	66.37	0.0103	0.0496	0.0605	0.00
38	SAGBEND	-60.15	-23.99	22.73	161.50	0.000	0.000	231.85	77.57	0.0101	0.0580	0.0688	0.00
39	SAGBEND	-65.76	-26.27	21.47	167.55	0.000	0.000	229.55	84.35	0.0100	0.0631	0.0737	0.00
40	SAGBEND	-71.41	-28.41	20.12	173.60	0.000	0.000	227.39	88.75	0.0098	0.0664	0.0769	0.00
41	SAGBEND	-77.12	-30.43	18.72	179.65	0.000	0.000	225.36	91.82	0.0097	0.0687	0.0791	0.00
42	SAGBEND	-82.87	-32.30	17.28	185.70	0.000	0.000	223.49	94.13	0.0095	0.0704	0.0808	0.00
43	SAGBEND	-88.67	-34.02	15.80	191.75	0.000	0.000	221.76	95.97	0.0094	0.0718	0.0821	0.00
44	SAGBEND	-94.51	-35.59	14.30	197.80	0.000	0.000	220.18	97.47	0.0093	0.0729	0.0831	0.00
45	SAGBEND	-100.39	-37.01	12.78	203.85	0.000	0.000	218.76	98.69	0.0092	0.0738	0.0840	0.00
46	SAGBEND	-106.31	-38.27	11.24	209.90	0.000	0.000	217.50	99.60	0.0091	0.0745	0.0846	0.00
47	SAGBEND	-112.26	-39.36	9.69	215.95	0.000	0.000	216.40	100.12	0.0090	0.0749	0.0849	0.00
48	SAGBEND	-118.24	-40.30	8.14	222.00	0.000	0.000	215.46	100.07	0.0089	0.0748	0.0848	0.00
49	SAGBEND	-124.24	-41.08	6.59	228.05	0.000	0.000	214.69	99.11	0.0089	0.0741	0.0841	0.00
50	SAGBEND	-130.26	-41.69	5.07	234.10	0.000	0.000	214.09	96.64	0.0088	0.0723	0.0822	0.00
51	SAGBEND	-136.29	-42.15	3.61	240.15	0.000	0.000	213.65	91.57	0.0088	0.0685	0.0784	0.00
52	SAGBEND	-142.33	-42.46	2.26	246.20	0.000	0.000	213.38	81.93	0.0088	0.0613	0.0712	0.00
53	SAGBEND	-148.38	-42.63	1.11	252.25	0.310	0.000	213.27	64.16	0.0088	0.0480	0.0579	0.00
54	SEABED	-154.43	-42.70	0.33	258.30	5.160	0.000	213.28	34.47	0.0088	0.0258	0.0357	0.00
55	SEABED	-160.48	-42.72	0.00	264.35	7.915	0.000	213.30	11.20	0.0088	0.0084	0.0183	0.00
56	SEABED	-166.53	-42.71	-0.10	270.40	7.042	0.000	213.30	3.29	0.0088	0.0025	0.0125	0.00
57	SEABED	-172.58	-42.70	-0.14	276.45	4.231	0.000	213.30	2.69	0.0088	0.0020	0.0120	0.00
58	SEABED	-176.23	-42.69	-0.16	280.11	2.079	0.000	213.31	0.58	0.0088	0.0004	0.0105	0.00
59	SEABED	-180.46	-42.67	-0.05	284.33	0.694	0.000	213.30	0.10	0.0000	0.0000	0.0000	0.00

S T A T I C P I P E C O O R D I N A T E S, F O R C E S A N D S T R A I N S

NODE NO.	PIPE SECTION	X COORD (M)	Y COORD (M)	VERT ANGLE (DEG)	PIPE LENGTH (M)	SUPPORT REACTION (KN)	SEPARA -TION (M)	AXIAL TENSION (KN)	BENDING MOMENT (KN-M)	TENSILE STRAIN (PCT)	BENDING STRAIN (PCT)	TOTAL STRAIN (PCT)	PERCNT ALLOW (PCT)
60	SEABED	-184.68	-42.67	-0.02	288.55	0.174	0.000	213.30	0.02	0.0000	0.0000	0.0000	0.00
61	SEABED	-190.73	-42.67	0.00	294.60	0.045	0.000	213.30	0.00	0.0000	0.0000	0.0000	0.00
62	SEABED	-196.78	-42.67	0.00	300.65	0.019	0.000	213.30	0.00	0.0000	0.0000	0.0000	0.00
63	SEABED	-202.82	-42.67	0.00	306.70	0.016	0.000	213.30	0.00	0.0000	0.0000	0.0000	0.00
64	SEABED	-208.87	-42.67	0.00	312.75	0.016	0.000	213.30	0.00	0.0000	0.0000	0.0000	0.00
65	SEABED	-214.92	-42.67	0.00	318.80	0.016	0.000	213.30	0.00	0.0000	0.0000	0.0000	0.00
66	SEABED	-220.97	-42.67	0.00	324.85	0.016	0.000	213.30	0.00	0.0000	0.0000	0.0000	0.00
67	SEABED	-227.02	-42.67	0.00	330.90	0.016	0.000	213.30	0.00	0.0000	0.0000	0.0000	0.00
68	SEABED	-233.07	-42.67	0.00	336.95	0.016	0.000	213.30	0.00	0.0000	0.0000	0.0000	0.00
69	SEABED	-239.12	-42.67	0.00	343.00	0.016	0.000	213.30	0.00	0.0000	0.0000	0.0000	0.00
70	SEABED	-245.17	-42.67	0.00	349.05	0.016	0.000	213.30	0.00	0.0000	0.0000	0.0000	0.00
71	SEABED	-251.22	-42.67	0.00	355.10	0.016	0.000	213.30	0.00	0.0000	0.0000	0.0000	0.00
72	SEABED	-257.27	-42.67	0.00	361.15	0.016	0.000	213.30	0.00	0.0000	0.0000	0.0000	0.00
73	SEABED	-263.32	-42.67	0.00	367.20	0.016	0.000	213.30	0.00	0.0000	0.0000	0.0000	0.00
74	SEABED	-269.37	-42.67	0.00	373.25	0.016	0.000	213.30	0.00	0.0000	0.0000	0.0000	0.00
75	SEABED	-275.42	-42.67	0.00	379.30	0.016	0.000	213.30	0.00	0.0000	0.0000	0.0000	0.00
76	SEABED	-281.47	-42.67	0.00	385.35	0.016	0.000	213.30	0.00	0.0000	0.0000	0.0000	0.00
77	SEABED	-287.52	-42.67	0.00	391.39	0.016	0.000	213.30	0.00	0.0000	0.0000	0.0000	0.00
78	SEABED	-293.57	-42.67	0.00	397.44	0.016	0.000	213.30	0.00	0.0000	0.0000	0.0000	0.00
79	SEABED	-299.62	-42.67	0.00	403.49	0.016	0.000	213.30	0.00	0.0000	0.0000	0.0000	0.00
80	SEABED	-305.67	-42.67	0.00	409.54	0.016	0.000	213.30	0.00	0.0000	0.0000	0.0000	0.00
81	SEABED	-311.72	-42.67	0.00	415.59	0.016	0.000	213.30	0.00	0.0000	0.0000	0.0000	0.00
82	SEABED	-317.77	-42.67	0.00	421.64	0.016	0.000	213.30	0.00	0.0000	0.0000	0.0000	0.00
83	SEABED	-323.82	-42.67	0.00	427.69	0.016	0.000	213.30	0.00	0.0000	0.0000	0.0000	0.00
84	SEABED	-329.86	-42.67	0.00	433.74	0.016	0.000	213.30	0.00	0.0000	0.0000	0.0000	0.00
85	SEABED	-335.91	-42.67	0.00	439.79	0.016	0.000	213.30	0.00	0.0000	0.0000	0.0000	0.00
86	SEABED	-341.96	-42.67	0.00	445.84	0.016	0.000	213.30	0.00	0.0000	0.0000	0.0000	0.00
87	SEABED	-348.01	-42.67	0.00	451.89	0.016	0.000	213.30	0.00	0.0000	0.0000	0.0000	0.00
88	SEABED	-354.06	-42.67	0.00	457.94	0.016	0.000	213.30	0.00	0.0000	0.0000	0.0000	0.00
89	SEABED	-360.11	-42.67	0.00	463.99	0.017	0.000	213.30	0.00	0.0000	0.0000	0.0000	0.00
90	SEABED	-366.16	-42.67	0.00	470.04	0.026	0.000	213.30	0.00	0.0000	0.0000	0.0000	0.00
91	SEABED	-372.21	-42.67	0.01	476.09	0.067	0.000	213.30	0.00	0.0000	0.0000	0.0000	0.00
92	SEABED	-376.22	-42.67	0.03	480.10	0.196	0.000	213.30	0.00	0.0000	0.0000	0.0000	0.00
93	SEABED	-380.26	-42.67	0.01	484.14	0.332	0.000	213.30	0.00	0.0000	0.0000	0.0000	0.00
94	SEABED	-384.31	-42.67	0.00	488.19	0.464	0.000	213.30	0.00	0.0000	0.0000	0.0000	0.00
95	SEABED	-390.36	-42.67	0.00	494.24	0.569	0.000	213.30	0.00	0.0000	0.0000	0.0000	0.00
96	SEABED	-396.41	-42.67	0.00	500.29	0.571	0.000	213.30	0.00	0.0000	0.0000	0.0000	0.00
97	SEABED	-402.46	-42.67	0.00	506.33	0.571	0.000	213.30	0.00	0.0000	0.0000	0.0000	0.00
98	SEABED	-408.51	-42.67	0.00	512.38	0.571	0.000	213.30	0.00	0.0000	0.0000	0.0000	0.00
99	SEABED	-414.56	-42.67	0.00	518.43	0.571	0.000	213.30	0.00	0.0000	0.0000	0.0000	0.00
100	SEABED	-420.61	-42.67	0.00	524.48	0.571	0.000	213.30	0.00	0.0000	0.0000	0.0000	0.00
101	SEABED	-426.65	-42.67	0.00	530.53	0.571	0.000	213.30	0.00	0.0000	0.0000	0.0000	0.00
102	SEABED	-432.70	-42.67	0.00	536.58	0.571	0.000	213.30	0.00	0.0000	0.0000	0.0000	0.00
103	SEABED	-438.75	-42.67	0.00	542.63	0.571	0.000	213.30	0.00	0.0000	0.0000	0.0000	0.00
104	SEABED	-444.80	-42.67	0.00	548.68	0.571	0.000	213.30	0.00	0.0000	0.0000	0.0000	0.00

S T A T I C P I P E C O O R D I N A T E S, F O R C E S A N D S T R A I N S

NODE NO.	PIPE SECTION	X COORD (M)	Y COORD (M)	VERT ANGLE (DEG)	PIPE LENGTH (M)	SUPPORT REACTION (KN)	SEPARA -TION (M)	AXIAL TENSION (KN)	BENDING MOMENT (KN-M)	TENSILE STRAIN (PCT)	BENDING STRAIN (PCT)	TOTAL STRAIN (PCT)	PERCNT ALLOW (PCT)
105	SEABED	-450.85	-42.67	0.00	554.73	0.571	0.000	213.30	0.00	0.0000	0.0000	0.0000	0.00
106	SEABED	-456.90	-42.67	0.00	560.78	0.571	0.000	213.30	0.00	0.0000	0.0000	0.0000	0.00
107	SEABED	-462.95	-42.67	0.00	566.83	0.571	0.000	213.30	0.00	0.0000	0.0000	0.0000	0.00

108	SEABED	-469.00	-42.67	0.00	572.88	0.571	0.000	213.30	0.00	0.0000	0.0000	0.0000	0.00
109	SEABED	-475.05	-42.67	0.00	578.93	0.571	0.000	213.30	0.00	0.0000	0.0000	0.0000	0.00
110	SEABED	-481.10	-42.67	0.00	584.97	0.571	0.000	213.30	0.00	0.0000	0.0000	0.0000	0.00
111	SEABED	-487.15	-42.67	0.00	591.02	0.571	0.000	213.30	0.00	0.0000	0.0000	0.0000	0.00
112	SEABED	-493.20	-42.67	0.00	597.07	0.571	0.000	213.30	0.00	0.0000	0.0000	0.0000	0.00
113	SEABED	-499.25	-42.67	0.00	603.12	0.571	0.000	213.30	0.00	0.0000	0.0000	0.0000	0.00
114	SEABED	-505.29	-42.67	0.00	609.17	0.571	0.000	213.30	0.00	0.0000	0.0000	0.0000	0.00
115	SEABED	-511.34	-42.67	0.00	615.22	0.571	0.000	213.30	0.00	0.0000	0.0000	0.0000	0.00
116	SEABED	-517.39	-42.67	0.00	621.27	0.571	0.000	213.30	0.00	0.0000	0.0000	0.0000	0.00
117	SEABED	-523.44	-42.67	0.00	627.32	0.571	0.000	213.30	0.00	0.0000	0.0000	0.0000	0.00
118	SEABED	-529.49	-42.67	0.00	633.37	0.571	0.000	213.30	0.00	0.0000	0.0000	0.0000	0.00
119	SEABED	-535.54	-42.67	0.00	639.42	0.571	0.000	213.30	0.00	0.0000	0.0000	0.0000	0.00
120	SEABED	-541.59	-42.67	0.00	645.47	0.571	0.000	213.30	0.00	0.0000	0.0000	0.0000	0.00
121	SEABED	-547.64	-42.67	0.00	651.52	0.571	0.000	213.30	0.00	0.0000	0.0000	0.0000	0.00
122	SEABED	-553.69	-42.67	0.00	657.57	0.571	0.000	213.30	0.00	0.0000	0.0000	0.0000	0.00
123	SEABED	-559.74	-42.67	0.00	663.61	0.571	0.000	213.30	0.00	0.0000	0.0000	0.0000	0.00
124	SEABED	-565.79	-42.67	0.00	669.66	0.571	0.000	213.30	0.00	0.0000	0.0000	0.0000	0.00
125	SEABED	-571.84	-42.67	0.00	675.71	0.571	0.000	213.30	0.00	0.0000	0.0000	0.0000	0.00
126	SEABED	-577.89	-42.67	0.00	681.76	0.571	0.000	213.30	0.00	0.0000	0.0000	0.0000	0.00
127	SEABED	-583.93	-42.67	0.00	687.81	0.571	0.000	213.30	0.00	0.0000	0.0000	0.0000	0.00
128	SEABED	-589.98	-42.67	0.00	693.86	0.571	0.000	213.30	0.00	0.0000	0.0000	0.0000	0.00
129	SEABED	-596.03	-42.67	0.00	699.91	0.571	0.000	213.30	0.00	0.0000	0.0000	0.0000	0.00
130	SEABED	-602.08	-42.67	0.00	705.96	0.571	0.000	213.30	0.00	0.0000	0.0000	0.0000	0.00
131	SEABED	-608.13	-42.67	0.00	712.01	0.571	0.000	213.30	0.00	0.0000	0.0000	0.0000	0.00
132	SEABED	-614.18	-42.67	0.00	718.06	0.571	0.000	213.30	0.00	0.0000	0.0000	0.0000	0.00
133	SEABED	-620.23	-42.67	0.00	724.11	0.571	0.000	213.30	0.00	0.0000	0.0000	0.0000	0.00
134	SEABED	-626.28	-42.67	0.00	730.16	0.571	0.000	213.30	0.00	0.0000	0.0000	0.0000	0.00
135	SEABED	-632.33	-42.67	0.00	736.21	0.571	0.000	213.30	0.00	0.0000	0.0000	0.0000	0.00
136	SEABED	-638.38	-42.67	0.00	742.25	0.571	0.000	213.30	0.00	0.0000	0.0000	0.0000	0.00
137	SEABED	-644.43	-42.67	0.00	748.30	0.571	0.000	213.30	0.00	0.0000	0.0000	0.0000	0.00
138	SEABED	-650.48	-42.67	0.00	754.35	0.571	0.000	213.30	0.00	0.0000	0.0000	0.0000	0.00
139	SEABED	-656.53	-42.67	0.00	760.40	0.571	0.000	213.30	0.00	0.0000	0.0000	0.0000	0.00
140	SEABED	-662.57	-42.67	0.00	766.45	0.571	0.000	213.30	0.00	0.0000	0.0000	0.0000	0.00
141	SEABED	-668.62	-42.67	0.00	772.50	0.571	0.000	213.30	0.00	0.0000	0.0000	0.0000	0.00
142	SEABED	-674.67	-42.67	0.00	778.55	0.571	0.000	213.30	0.00	0.0000	0.0000	0.0000	0.00
143	SEABED	-680.72	-42.67	0.00	784.60	0.571	0.000	213.30	0.00	0.0000	0.0000	0.0000	0.00
144	SEABED	-686.77	-42.67	0.00	790.65	0.571	0.000	213.30	0.00	0.0000	0.0000	0.0000	0.00
145	SEABED	-692.82	-42.67	0.00	796.70	0.571	0.000	213.30	0.00	0.0000	0.0000	0.0000	0.00
146	SEABED	-698.87	-42.67	0.00	802.75	0.571	0.000	213.30	0.00	0.0000	0.0000	0.0000	0.00
147	SEABED	-704.92	-42.67	0.00	808.80	0.571	0.000	213.30	0.00	0.0000	0.0000	0.0000	0.00
148	SEABED	-710.97	-42.67	0.00	814.85	0.571	0.000	213.30	0.00	0.0000	0.0000	0.0000	0.00
149	SEABED	-717.02	-42.67	0.00	820.89	0.571	0.000	213.30	0.00	0.0000	0.0000	0.0000	0.00

S T A T I C P I P E C O O R D I N A T E S, F O R C E S A N D S T R A I N S

NODE NO.	PIPE SECTION	X COORD (M)	Y COORD (M)	VERT ANGLE (DEG)	PIPE LENGTH (M)	SUPPORT REACTION (KN)	SEPARA -TION (M)	AXIAL TENSION (KN)	BENDING MOMENT (KN-M)	TENSILE STRAIN (PCT)	BENDING STRAIN (PCT)	TOTAL STRAIN (PCT)	PERCNT ALLOW (PCT)
150	SEABED	-723.07	-42.67	0.00	826.94	0.571	0.000	213.30	0.00	0.0000	0.0000	0.0000	0.00
151	SEABED	-729.12	-42.67	0.00	832.99	0.571	0.000	213.30	0.00	0.0000	0.0000	0.0000	0.00
152	SEABED	-735.17	-42.67	0.00	839.04	0.571	0.000	213.30	0.00	0.0000	0.0000	0.0000	0.00
153	SEABED	-741.21	-42.67	0.00	845.09	0.571	0.000	213.30	0.00	0.0000	0.0000	0.0000	0.00
154	SEABED	-747.26	-42.67	0.00	851.14	0.571	0.000	213.30	0.00	0.0000	0.0000	0.0000	0.00
155	SEABED	-753.31	-42.67	0.00	857.19	0.571	0.000	213.30	0.00	0.0000	0.0000	0.0000	0.00
156	SEABED	-759.36	-42.67	0.00	863.24	0.569	0.000	213.30	0.00	0.0000	0.0000	0.0000	0.00
157	SEABED	-765.41	-42.67	0.00	869.29	0.555	0.000	213.30	0.00	0.0000	0.0000	0.0000	0.00
158	SEABED	-771.46	-42.67	-0.01	875.34	0.405	0.000	213.30	0.00	0.0000	0.0000	0.0000	0.00
159	SEABED	-776.17	-42.67	-0.07	880.04	0.000	0.000	213.30	0.00	0.0000	0.0000	0.0000	0.00

INITIATION STRESS

S T A T I C P I P E C O O R D I N A T E S, F O R C E S A N D S T R E S S E S

NODE NO.	PIPE SECTION	X COORD (M)	Y COORD (M)	VERT ANGLE (DEG)	PIPE LENGTH (M)	SUPPORT REACTION (KN)	SEPARA -TION (M)	AXIAL TENSION (KN)	BENDING MOMENT (KN-M)	TENSILE STRESS (MPA)	BENDING STRESS (MPA)	TOTAL STRESS (MPA)	PERCNT YIELD (PCT)
1	LAYBARGE	96.31	6.41	1.93	0.00	9.928	0.000	0.00	2.74	0.00	4.25	4.25	1.18
3	LAYBARGE	84.28	6.05	1.58	12.04	24.175	0.000	-0.73	-19.25	-0.07	-29.79	29.86	8.30
5	LAYBARGE	73.45	5.73	1.90	22.87	24.298	0.000	-1.39	-29.25	-0.13	-45.29	45.42	12.62
7	TENSIONR	60.11	5.24	2.31	36.23	32.091	0.000	20.92	-23.97	2.01	-37.11	39.13	10.87
9	LAYBARGE	51.10	4.87	2.19	45.24	0.000	0.000	20.19	30.90	1.94	47.85	49.79	13.83
10	LAYBARGE	46.45	4.70	1.92	49.89	11.209	0.000	19.87	11.46	1.91	17.74	19.65	5.46
12	LAYBARGE	35.36	4.31	2.57	60.99	39.322	0.000	18.89	-66.94	1.82	-103.63	105.45	29.29
14	LAYBARGE	23.33	3.62	3.62	73.04	15.089	0.000	17.70	-16.53	1.70	-25.60	27.30	7.58
16	LAYBARGE	19.25	3.36	3.70	77.13	0.000	0.000	17.18	0.00	1.65	0.00	1.65	0.46
17	LAYBARGE	8.84	2.19	6.12	87.61	0.000	0.431	17.18	0.00	0.00	0.00	0.00	0.00
19	LAYBARGE	4.83	1.78	5.69	91.64	0.000	0.000	17.17	0.00	0.00	0.00	0.00	0.00
20	LAYBARGE	3.02	1.60	5.29	93.45	0.000	0.985	17.16	0.00	0.00	0.00	0.00	0.00
24	STINGER	-7.50	0.68	4.60	104.02	0.000	0.942	17.14	0.00	0.00	0.00	0.00	0.00
26	STINGER	-16.57	0.01	5.29	113.11	0.797	0.000	17.12	0.00	0.00	0.00	0.00	0.00
29	STINGER	-26.50	-1.10	10.29	123.11	2.350	0.000	17.08	0.00	0.00	0.00	0.00	0.00
31	STINGER	-37.10	-3.78	14.19	134.04	0.023	0.000	17.11	0.00	0.00	0.00	0.00	0.00
33	STINGER	-40.00	-4.51	14.18	137.04	0.000	0.450	17.11	0.00	0.00	0.00	0.00	0.00
35	SAGBEND	-46.07	-6.04	14.13	143.29	0.000	0.000	17.11	0.00	0.00	0.00	0.00	0.00
36	SAGBEND	-51.93	-7.52	14.08	149.34	0.000	0.000	17.10	0.00	0.00	0.00	0.00	0.00
37	SAGBEND	-57.80	-8.99	14.03	155.39	0.000	0.000	17.10	0.00	0.00	0.00	0.00	0.00
38	SAGBEND	-63.67	-10.45	13.98	161.44	0.000	0.000	17.09	0.00	0.00	0.00	0.00	0.00
39	SAGBEND	-69.55	-11.91	13.93	167.49	0.000	0.000	17.09	0.00	0.00	0.00	0.00	0.00
40	SAGBEND	-75.42	-13.36	13.88	173.54	0.000	0.000	17.09	0.00	0.00	0.00	0.00	0.00
41	SAGBEND	-81.29	-14.81	13.83	179.59	0.000	0.000	17.08	0.00	0.00	0.00	0.00	0.00
42	SAGBEND	-87.17	-16.26	13.77	185.64	0.000	0.000	17.08	0.00	0.00	0.00	0.00	0.00
43	SAGBEND	-93.04	-17.69	13.72	191.69	0.000	0.000	17.07	0.00	0.00	0.00	0.00	0.00
44	SAGBEND	-98.92	-19.13	13.67	197.74	0.000	0.000	17.07	0.00	0.00	0.00	0.00	0.00
45	SAGBEND	-104.80	-20.55	13.62	203.79	0.000	0.000	17.07	0.00	0.00	0.00	0.00	0.00
46	SAGBEND	-110.68	-21.98	13.57	209.84	0.000	0.000	17.06	0.00	0.00	0.00	0.00	0.00
47	SAGBEND	-116.56	-23.39	13.52	215.89	0.000	0.000	17.06	0.00	0.00	0.00	0.00	0.00
48	SAGBEND	-122.45	-24.80	13.46	221.94	0.000	0.000	17.06	0.00	0.00	0.00	0.00	0.00
49	SAGBEND	-128.33	-26.21	13.41	227.99	0.000	0.000	17.05	0.00	0.00	0.00	0.00	0.00
50	SAGBEND	-134.22	-27.61	13.36	234.04	0.000	0.000	17.05	0.00	0.00	0.00	0.00	0.00
51	SAGBEND	-140.10	-29.01	13.31	240.09	0.000	0.000	17.05	0.00	0.00	0.00	0.00	0.00
52	SAGBEND	-145.99	-30.40	13.26	246.14	0.000	0.000	17.04	0.00	0.00	0.00	0.00	0.00
53	SAGBEND	-151.88	-31.78	13.21	252.19	0.000	0.000	17.04	0.00	0.00	0.00	0.00	0.00
54	SAGBEND	-157.77	-33.16	13.15	258.24	0.000	0.000	17.03	0.00	0.00	0.00	0.00	0.00
55	SAGBEND	-163.66	-34.53	13.10	264.29	0.000	0.000	17.03	0.00	0.00	0.00	0.00	0.00
56	SAGBEND	-169.56	-35.90	13.05	270.34	0.000	0.000	17.03	0.00	0.00	0.00	0.00	0.00
57	SAGBEND	-175.45	-37.27	13.00	276.39	0.000	0.000	17.02	0.00	0.00	0.00	0.00	0.00
58	SAGBEND	-178.99	-38.08	12.97	280.02	0.000	0.000	17.02	0.00	0.00	0.00	0.00	0.00
59	SAGBEND	-183.13	-38.99	11.65	284.26	0.000	0.000	16.94	0.00	0.00	0.00	0.00	0.00
60	SAGBEND	-187.28	-39.79	10.32	288.49	0.000	0.000	16.86	0.00	0.00	0.00	0.00	0.00

S T A T I C P I P E C O O R D I N A T E S, F O R C E S A N D S T R E S S E S

NODE NO.	PIPE SECTION	X COORD (M)	Y COORD (M)	VERT ANGLE (DEG)	PIPE LENGTH (M)	SUPPORT REACTION (KN)	SEPARA -TION (M)	AXIAL TENSION (KN)	BENDING MOMENT (KN-M)	TENSILE STRESS (MPA)	BENDING STRESS (MPA)	TOTAL STRESS (MPA)	PERCNT YIELD (PCT)
61	SAGBEND	-193.25	-40.78	8.39	294.54	0.000	0.000	16.77	0.00	0.00	0.00	0.00	0.00
62	SAGBEND	-199.25	-41.56	6.45	300.59	0.000	0.000	16.69	0.00	0.00	0.00	0.00	0.00
63	SAGBEND	-205.27	-42.13	4.49	306.64	0.000	0.000	16.64	0.00	0.00	0.00	0.00	0.00
64	SAGBEND	-211.31	-42.50	2.51	312.69	0.000	0.000	16.60	0.00	0.00	0.00	0.00	0.00
65	SAGBEND	-217.36	-42.66	0.48	318.74	0.147	0.000	16.59	0.01	0.00	0.00	0.00	0.00
66	SEABED	-223.41	-42.67	0.04	324.79	0.554	0.000	16.59	0.02	0.00	0.00	0.00	0.00
67	SEABED	-229.46	-42.67	0.01	330.84	0.572	0.000	16.59	0.00	0.00	0.00	0.00	0.00
68	SEABED	-235.51	-42.67	0.00	336.89	0.572	0.000	16.59	0.00	0.00	0.00	0.00	0.00
69	SEABED	-241.56	-42.67	0.00	342.94	0.572	0.000	16.59	0.00	0.00	0.00	0.00	0.00
70	SEABED	-247.61	-42.67	0.00	348.99	0.572	0.000	16.59	0.00	0.00	0.00	0.00	0.00
71	SEABED	-253.66	-42.67	0.00	355.04	0.572	0.000	16.59	0.00	0.00	0.00	0.00	0.00
72	SEABED	-259.71	-42.67	0.00	361.09	0.572	0.000	16.59	0.00	0.00	0.00	0.00	0.00
73	SEABED	-265.76	-42.67	0.00	367.14	0.572	0.000	16.59	0.00	0.00	0.00	0.00	0.00
74	SEABED	-271.81	-42.67	0.00	373.19	0.572	0.000	16.59	0.00	0.00	0.00	0.00	0.00
75	SEABED	-277.86	-42.67	0.00	379.24	0.572	0.000	16.59	0.00	0.00	0.00	0.00	0.00
76	SEABED	-283.91	-42.67	0.00	385.29	0.572	0.000	16.59	0.00	0.00	0.00	0.00	0.00
77	SEABED	-289.96	-42.67	0.00	391.34	0.572	0.000	16.59	0.00	0.00	0.00	0.00	0.00
78	SEABED	-296.01	-42.67	0.00	397.39	0.572	0.000	16.59	0.00	0.00	0.00	0.00	0.00
79	SEABED	-302.06	-42.67	0.00	403.44	0.572	0.000	16.59	0.00	0.00	0.00	0.00	0.00
80	SEABED	-308.11	-42.67	0.00	409.49	0.572	0.000	16.59	0.00	0.00	0.00	0.00	0.00
81	SEABED	-314.16	-42.67	0.00	415.54	0.572	0.000	16.59	0.00	0.00	0.00	0.00	0.00
82	SEABED	-320.21	-42.67	0.00	421.59	0.572	0.000	16.59	0.00	0.00	0.00	0.00	0.00
83	SEABED	-326.26	-42.67	0.00	427.64	0.572	0.000	16.59	0.00	0.00	0.00	0.00	0.00
84	SEABED	-332.31	-42.67	0.00	433.69	0.572	0.000	16.59	0.00	0.00	0.00	0.00	0.00
85	SEABED	-338.36	-42.67	0.00	439.74	0.572	0.000	16.59	0.00	0.00	0.00	0.00	0.00
86	SEABED	-344.41	-42.67	0.00	445.79	0.572	0.000	16.59	0.00	0.00	0.00	0.00	0.00
87	SEABED	-350.46	-42.67	0.00	451.84	0.572	0.000	16.59	0.00	0.00	0.00	0.00	0.00
88	SEABED	-356.51	-42.67	0.00	457.89	0.572	0.000	16.59	0.00	0.00	0.00	0.00	0.00
89	SEABED	-362.56	-42.67	0.00	463.95	0.572	0.000	16.59	0.00	0.00	0.00	0.00	0.00
90	SEABED	-368.61	-42.67	0.00	470.00	0.572	0.000	16.59	0.00	0.00	0.00	0.00	0.00

91	SEABED	-374.66	-42.67	0.00	476.05	0.572	0.000	16.59	0.00	0.00	0.00	0.00	0.00
92	SEABED	-380.71	-42.67	0.00	482.10	0.572	0.000	16.59	0.00	0.00	0.00	0.00	0.00
93	SEABED	-386.76	-42.67	0.00	488.15	0.572	0.000	16.59	0.00	0.00	0.00	0.00	0.00
94	SEABED	-392.81	-42.67	0.00	494.20	0.572	0.000	16.59	0.00	0.00	0.00	0.00	0.00
95	SEABED	-398.86	-42.67	0.00	500.25	0.572	0.000	16.59	0.00	0.00	0.00	0.00	0.00
96	SEABED	-404.91	-42.67	0.00	506.30	0.572	0.000	16.59	0.00	0.00	0.00	0.00	0.00
97	SEABED	-410.96	-42.67	0.00	512.35	0.572	0.000	16.59	0.00	0.00	0.00	0.00	0.00
98	SEABED	-417.01	-42.67	0.00	518.40	0.572	0.000	16.59	0.00	0.00	0.00	0.00	0.00
99	SEABED	-423.06	-42.67	0.00	524.45	0.572	0.000	16.59	0.00	0.00	0.00	0.00	0.00
100	SEABED	-429.11	-42.67	0.00	530.50	0.572	0.000	16.59	0.00	0.00	0.00	0.00	0.00
101	SEABED	-435.16	-42.67	0.00	536.55	0.572	0.000	16.59	0.00	0.00	0.00	0.00	0.00
102	SEABED	-441.21	-42.67	0.00	542.60	0.572	0.000	16.59	0.00	0.00	0.00	0.00	0.00
103	SEABED	-447.26	-42.67	0.00	548.65	0.572	0.000	16.59	0.00	0.00	0.00	0.00	0.00
104	SEABED	-453.31	-42.67	0.00	554.70	0.572	0.000	16.59	0.00	0.00	0.00	0.00	0.00

S T A T I C P I P E C O O R D I N A T E S, F O R C E S A N D S T R E S S E S

NODE NO.	PIPE SECTION	X COORD (M)	Y COORD (M)	VERT ANGLE (DEG)	PIPE LENGTH (M)	SUPPORT REACTION (KN)	SEPARA -TION (M)	AXIAL TENSION (KN)	BENDING MOMENT (KN-M)	TENSILE STRESS (MPA)	BENDING STRESS (MPA)	TOTAL STRESS (MPA)	PERCNT YIELD (PCT)
105	SEABED	-459.36	-42.67	0.00	560.75	0.572	0.000	16.59	0.00	0.00	0.00	0.00	0.00
106	SEABED	-465.41	-42.67	0.00	566.80	0.572	0.000	16.59	0.00	0.00	0.00	0.00	0.00
107	SEABED	-471.46	-42.67	0.00	572.85	0.572	0.000	16.59	0.00	0.00	0.00	0.00	0.00
108	SEABED	-477.51	-42.67	0.00	578.90	0.572	0.000	16.59	0.00	0.00	0.00	0.00	0.00
109	SEABED	-483.57	-42.67	0.00	584.95	0.572	0.000	16.59	0.00	0.00	0.00	0.00	0.00
110	SEABED	-489.62	-42.67	0.00	591.00	0.572	0.000	16.59	0.00	0.00	0.00	0.00	0.00
111	SEABED	-495.67	-42.67	0.00	597.05	0.572	0.000	16.59	0.00	0.00	0.00	0.00	0.00
112	SEABED	-501.72	-42.67	0.00	603.10	0.572	0.000	16.59	0.00	0.00	0.00	0.00	0.00
113	SEABED	-507.77	-42.67	0.00	609.15	0.572	0.000	16.59	0.00	0.00	0.00	0.00	0.00
114	SEABED	-513.82	-42.67	0.00	615.20	0.572	0.000	16.59	0.00	0.00	0.00	0.00	0.00
115	SEABED	-519.87	-42.67	0.00	621.25	0.572	0.000	16.59	0.00	0.00	0.00	0.00	0.00
116	SEABED	-525.92	-42.67	0.00	627.30	0.572	0.000	16.59	0.00	0.00	0.00	0.00	0.00
117	SEABED	-531.97	-42.67	0.00	633.35	0.572	0.000	16.59	0.00	0.00	0.00	0.00	0.00
118	SEABED	-538.02	-42.67	0.00	639.40	0.572	0.000	16.59	0.00	0.00	0.00	0.00	0.00
119	SEABED	-544.07	-42.67	0.00	645.45	0.572	0.000	16.59	0.00	0.00	0.00	0.00	0.00
120	SEABED	-550.12	-42.67	0.00	651.50	0.572	0.000	16.59	0.00	0.00	0.00	0.00	0.00
121	SEABED	-556.17	-42.67	0.00	657.55	0.572	0.000	16.59	0.00	0.00	0.00	0.00	0.00
122	SEABED	-562.22	-42.67	0.00	663.60	0.572	0.000	16.59	0.00	0.00	0.00	0.00	0.00
123	SEABED	-568.27	-42.67	0.00	669.65	0.572	0.000	16.59	0.00	0.00	0.00	0.00	0.00
124	SEABED	-574.32	-42.67	-0.01	675.70	0.482	0.000	16.59	0.00	0.00	0.00	0.00	0.00
125	SEABED	-578.65	-42.67	-0.19	680.03	0.000	0.000	16.59	0.00	0.00	0.00	0.00	0.00

S T A T I C P I P E C O O R D I N A T E S, F O R C E S A N D S T R E S S E S

NODE NO.	PIPE SECTION	X COORD (M)	Y COORD (M)	VERT ANGLE (DEG)	PIPE LENGTH (M)	SUPPORT REACTION (KN)	SEPARA -TION (M)	AXIAL TENSION (KN)	BENDING MOMENT (KN-M)	TENSILE STRESS (MPA)	BENDING STRESS (MPA)	TOTAL STRESS (MPA)	PERCNT YIELD (PCT)
1	LAYBARGE	96.31	6.41	1.93	0.00	9.947	0.000	0.00	2.75	0.00	4.25	4.25	1.18
3	LAYBARGE	84.28	6.05	1.58	12.04	24.043	0.000	-0.73	-19.05	-0.07	-29.49	29.56	8.21
5	LAYBARGE	73.45	5.73	1.91	22.87	24.737	0.000	-1.39	-30.12	-0.13	-46.62	46.76	12.99
7	TENSIONR	60.11	5.24	2.28	36.23	30.609	0.000	20.92	-21.70	2.01	-33.59	35.61	9.89
9	LAYBARGE	51.10	4.87	2.20	45.24	0.000	0.000	20.20	23.85	1.95	36.93	38.87	10.80
10	LAYBARGE	46.45	4.70	2.04	49.89	18.231	0.000	19.88	0.81	1.91	1.25	3.17	0.88
12	LAYBARGE	35.36	4.31	2.14	60.99	13.231	0.000	19.06	-33.99	1.83	-52.62	54.45	15.13
14	LAYBARGE	23.34	3.62	5.31	73.04	55.442	0.000	16.70	-196.75	1.61	-304.61	306.21	85.06
16	LAYBARGE	19.27	3.18	6.98	77.13	0.000	0.000	16.54	-112.11	1.59	-173.57	175.16	48.66
17	LAYBARGE	8.90	1.76	8.16	87.60	8.191	0.000	13.96	-10.47	1.34	-16.21	17.56	4.88
19	LAYBARGE	4.90	1.18	8.20	91.63	0.000	0.000	12.81	0.00	1.23	0.00	1.23	0.34
20	LAYBARGE	3.09	1.05	3.90	93.45	0.000	0.428	12.84	0.00	0.00	0.00	0.00	0.00
24	STINGER	-7.46	0.40	2.97	104.02	0.000	0.659	12.82	0.00	0.00	0.00	0.00	0.00
26	STINGER	-16.57	0.01	4.21	113.14	0.940	0.000	12.80	0.00	0.00	0.00	0.00	0.00
29	STINGER	-26.50	-1.03	9.72	123.13	1.684	0.000	12.78	0.00	0.00	0.00	0.00	0.00
31	STINGER	-37.13	-3.57	13.81	134.06	0.190	0.000	12.80	0.00	0.00	0.00	0.00	0.00
33	STINGER	-40.04	-4.31	14.17	137.07	0.000	0.411	12.80	0.00	0.00	0.00	0.00	0.00
35	SAGBEND	-46.09	-5.83	14.11	143.30	0.000	0.000	12.79	0.00	0.00	0.00	0.00	0.00
36	SAGBEND	-51.96	-7.30	14.04	149.35	0.000	0.000	12.79	0.00	0.00	0.00	0.00	0.00
37	SAGBEND	-57.83	-8.77	13.97	155.40	0.000	0.000	12.78	0.00	0.00	0.00	0.00	0.00
38	SAGBEND	-63.70	-10.22	13.91	161.45	0.000	0.000	12.78	0.00	0.00	0.00	0.00	0.00
39	SAGBEND	-69.57	-11.67	13.84	167.50	0.000	0.000	12.78	0.00	0.00	0.00	0.00	0.00
40	SAGBEND	-75.45	-13.12	13.77	173.55	0.000	0.000	12.77	0.00	0.00	0.00	0.00	0.00
41	SAGBEND	-81.33	-14.55	13.70	179.60	0.000	0.000	12.77	0.00	0.00	0.00	0.00	0.00
42	SAGBEND	-87.21	-15.98	13.63	185.65	0.000	0.000	12.77	0.00	0.00	0.00	0.00	0.00
43	SAGBEND	-93.09	-17.41	13.56	191.70	0.000	0.000	12.76	0.00	0.00	0.00	0.00	0.00
44	SAGBEND	-98.97	-18.82	13.49	197.75	0.000	0.000	12.76	0.00	0.00	0.00	0.00	0.00
45	SAGBEND	-104.85	-20.23	13.42	203.80	0.000	0.000	12.75	0.00	0.00	0.00	0.00	0.00
46	SAGBEND	-110.74	-21.63	13.35	209.85	0.000	0.000	12.75	0.00	0.00	0.00	0.00	0.00
47	SAGBEND	-116.62	-23.02	13.28	215.90	0.000	0.000	12.75	0.00	0.00	0.00	0.00	0.00
48	SAGBEND	-122.51	-24.41	13.22	221.95	0.000	0.000	12.74	0.00	0.00	0.00	0.00	0.00
49	SAGBEND	-128.40	-25.79	13.15	228.00	0.000	0.000	12.74	0.00	0.00	0.00	0.00	0.00
50	SAGBEND	-134.30	-27.16	13.08	234.05	0.000	0.000	12.74	0.00	0.00	0.00	0.00	0.00
51	SAGBEND	-140.19	-28.53	13.01	240.10	0.000	0.000	12.73	0.00	0.00	0.00	0.00	0.00
52	SAGBEND	-146.09	-29.89	12.94	246.15	0.000	0.000	12.73	0.00	0.00	0.00	0.00	0.00
53	SAGBEND	-151.98	-31.24	12.87	252.20	0.000	0.000	12.73	0.00	0.00	0.00	0.00	0.00
54	SAGBEND	-157.88	-32.58	12.80	258.25	0.000	0.000	12.72	0.00	0.00	0.00	0.00	0.00
55	SAGBEND	-163.78	-33.92	12.73	264.30	0.000	0.000	12.72	0.00	0.00	0.00	0.00	0.00
56	SAGBEND	-169.68	-35.25	12.66	270.35	0.000	0.000	12.71	0.00	0.00	0.00	0.00	0.00
57	SAGBEND	-175.59	-36.57	12.59	276.40	0.000	0.000	12.71	0.00	0.00	0.00	0.00	0.00
58	SAGBEND	-181.49	-37.88	12.52	282.45	0.000	0.000	12.71	0.00	0.00	0.00	0.00	0.00
59	SAGBEND	-185.19	-38.70	12.48	286.24	0.000	0.000	12.71	0.00	0.00	0.00	0.00	0.00
60	SAGBEND	-188.90	-39.52	12.44	290.03	0.000	0.000	12.70	0.00	0.00	0.00	0.00	0.00

S T A T I C P I P E C O O R D I N A T E S, F O R C E S A N D S T R E S S E S

NODE NO.	PIPE SECTION	X COORD (M)	Y COORD (M)	VERT ANGLE (DEG)	PIPE LENGTH (M)	SUPPORT REACTION (KN)	SEPARA -TION (M)	AXIAL TENSION (KN)	BENDING MOMENT (KN-M)	TENSILE STRESS (MPA)	BENDING STRESS (MPA)	TOTAL STRESS (MPA)	PERCNT YIELD (PCT)
61	SAGBEND	-193.32	-40.42	10.54	294.55	0.000	0.000	12.62	0.00	0.00	0.00	0.00	0.00
62	SAGBEND	-199.29	-41.39	7.97	300.60	0.000	0.000	12.53	0.00	0.00	0.00	0.00	0.00
63	SAGBEND	-205.30	-42.10	5.36	306.65	0.000	0.000	12.46	0.00	0.00	0.00	0.00	0.00
64	SAGBEND	-211.34	-42.52	2.73	312.70	0.000	0.000	12.42	0.00	0.00	0.00	0.00	0.00
65	SEABED	-217.39	-42.67	0.09	318.75	0.269	0.000	12.41	0.00	0.00	0.00	0.00	0.00
66	SEABED	-223.44	-42.67	0.01	324.80	0.570	0.000	12.41	0.00	0.00	0.00	0.00	0.00
67	SEABED	-229.49	-42.67	0.00	330.85	0.572	0.000	12.41	0.00	0.00	0.00	0.00	0.00
68	SEABED	-235.54	-42.67	0.00	336.90	0.572	0.000	12.41	0.00	0.00	0.00	0.00	0.00
69	SEABED	-241.59	-42.67	0.00	342.95	0.572	0.000	12.41	0.00	0.00	0.00	0.00	0.00
70	SEABED	-247.64	-42.67	0.00	349.00	0.572	0.000	12.41	0.00	0.00	0.00	0.00	0.00
71	SEABED	-253.69	-42.67	0.00	355.05	0.572	0.000	12.41	0.00	0.00	0.00	0.00	0.00
72	SEABED	-259.74	-42.67	0.00	361.10	0.572	0.000	12.41	0.00	0.00	0.00	0.00	0.00
73	SEABED	-265.79	-42.67	0.00	367.15	0.572	0.000	12.41	0.00	0.00	0.00	0.00	0.00
74	SEABED	-271.84	-42.67	0.00	373.20	0.572	0.000	12.41	0.00	0.00	0.00	0.00	0.00
75	SEABED	-277.89	-42.67	0.00	379.25	0.572	0.000	12.41	0.00	0.00	0.00	0.00	0.00
76	SEABED	-283.94	-42.67	0.00	385.30	0.572	0.000	12.41	0.00	0.00	0.00	0.00	0.00
77	SEABED	-289.99	-42.67	0.00	391.35	0.572	0.000	12.41	0.00	0.00	0.00	0.00	0.00
78	SEABED	-296.04	-42.67	0.00	397.40	0.572	0.000	12.41	0.00	0.00	0.00	0.00	0.00
79	SEABED	-302.09	-42.67	0.00	403.45	0.572	0.000	12.41	0.00	0.00	0.00	0.00	0.00
80	SEABED	-308.14	-42.67	0.00	409.50	0.572	0.000	12.41	0.00	0.00	0.00	0.00	0.00
81	SEABED	-314.19	-42.67	0.00	415.55	0.572	0.000	12.41	0.00	0.00	0.00	0.00	0.00
82	SEABED	-320.24	-42.67	0.00	421.60	0.572	0.000	12.41	0.00	0.00	0.00	0.00	0.00
83	SEABED	-326.29	-42.67	0.00	427.65	0.572	0.000	12.41	0.00	0.00	0.00	0.00	0.00
84	SEABED	-332.34	-42.67	0.00	433.70	0.572	0.000	12.41	0.00	0.00	0.00	0.00	0.00
85	SEABED	-338.39	-42.67	0.00	439.75	0.572	0.000	12.41	0.00	0.00	0.00	0.00	0.00
86	SEABED	-344.44	-42.67	0.00	445.80	0.572	0.000	12.41	0.00	0.00	0.00	0.00	0.00
87	SEABED	-350.49	-42.67	0.00	451.85	0.572	0.000	12.41	0.00	0.00	0.00	0.00	0.00
88	SEABED	-356.54	-42.67	0.00	457.90	0.572	0.000	12.41	0.00	0.00	0.00	0.00	0.00
89	SEABED	-362.59	-42.67	0.00	463.95	0.572	0.000	12.41	0.00	0.00	0.00	0.00	0.00
90	SEABED	-368.64	-42.67	0.00	470.00	0.572	0.000	12.41	0.00	0.00	0.00	0.00	0.00
91	SEABED	-374.69	-42.67	0.00	476.05	0.572	0.000	12.41	0.00	0.00	0.00	0.00	0.00
92	SEABED	-380.74	-42.67	0.00	482.10	0.572	0.000	12.41	0.00	0.00	0.00	0.00	0.00
93	SEABED	-386.79	-42.67	0.00	488.15	0.572	0.000	12.41	0.00	0.00	0.00	0.00	0.00
94	SEABED	-392.84	-42.67	0.00	494.20	0.572	0.000	12.41	0.00	0.00	0.00	0.00	0.00
95	SEABED	-398.89	-42.67	0.00	500.25	0.572	0.000	12.41	0.00	0.00	0.00	0.00	0.00
96	SEABED	-404.94	-42.67	0.00	506.30	0.572	0.000	12.41	0.00	0.00	0.00	0.00	0.00
97	SEABED	-410.99	-42.67	0.00	512.35	0.572	0.000	12.41	0.00	0.00	0.00	0.00	0.00
98	SEABED	-417.04	-42.67	0.00	518.40	0.572	0.000	12.41	0.00	0.00	0.00	0.00	0.00
99	SEABED	-423.09	-42.67	0.00	524.45	0.572	0.000	12.41	0.00	0.00	0.00	0.00	0.00
100	SEABED	-429.14	-42.67	0.00	530.50	0.572	0.000	12.41	0.00	0.00	0.00	0.00	0.00
101	SEABED	-435.19	-42.67	0.00	536.55	0.572	0.000	12.41	0.00	0.00	0.00	0.00	0.00
102	SEABED	-441.24	-42.67	0.00	542.60	0.572	0.000	12.41	0.00	0.00	0.00	0.00	0.00
103	SEABED	-447.29	-42.67	0.00	548.65	0.572	0.000	12.41	0.00	0.00	0.00	0.00	0.00
104	SEABED	-453.34	-42.67	0.00	554.70	0.572	0.000	12.41	0.00	0.00	0.00	0.00	0.00

S T A T I C P I P E C O O R D I N A T E S, F O R C E S A N D S T R E S S E S

NODE NO.	PIPE SECTION	X COORD (M)	Y COORD (M)	VERT ANGLE (DEG)	PIPE LENGTH (M)	SUPPORT REACTION (KN)	SEPARA -TION (M)	AXIAL TENSION (KN)	BENDING MOMENT (KN-M)	TENSILE STRESS (MPA)	BENDING STRESS (MPA)	TOTAL STRESS (MPA)	PERCNT YIELD (PCT)
105	SEABED	-459.39	-42.67	0.00	560.75	0.572	0.000	12.41	0.00	0.00	0.00	0.00	0.00
106	SEABED	-465.44	-42.67	0.00	566.80	0.572	0.000	12.41	0.00	0.00	0.00	0.00	0.00
107	SEABED	-471.49	-42.67	0.00	572.85	0.572	0.000	12.41	0.00	0.00	0.00	0.00	0.00
108	SEABED	-477.54	-42.67	0.00	578.90	0.572	0.000	12.41	0.00	0.00	0.00	0.00	0.00
109	SEABED	-483.59	-42.67	0.00	584.95	0.572	0.000	12.41	0.00	0.00	0.00	0.00	0.00
110	SEABED	-489.64	-42.67	0.00	591.00	0.572	0.000	12.41	0.00	0.00	0.00	0.00	0.00
111	SEABED	-495.69	-42.67	0.00	597.05	0.572	0.000	12.41	0.00	0.00	0.00	0.00	0.00
112	SEABED	-501.74	-42.67	0.00	603.10	0.572	0.000	12.41	0.00	0.00	0.00	0.00	0.00
113	SEABED	-507.79	-42.67	0.00	609.15	0.572	0.000	12.41	0.00	0.00	0.00	0.00	0.00
114	SEABED	-513.84	-42.67	0.00	615.20	0.572	0.000	12.41	0.00	0.00	0.00	0.00	0.00
115	SEABED	-519.89	-42.67	0.00	621.25	0.572	0.000	12.41	0.00	0.00	0.00	0.00	0.00
116	SEABED	-525.94	-42.67	0.00	627.30	0.572	0.000	12.41	0.00	0.00	0.00	0.00	0.00
117	SEABED	-531.99	-42.67	0.00	633.35	0.572	0.000	12.41	0.00	0.00	0.00	0.00	0.00
118	SEABED	-538.04	-42.67	0.00	639.40	0.572	0.000	12.41	0.00	0.00	0.00	0.00	0.00
119	SEABED	-544.09	-42.67	0.00	645.45	0.572	0.000	12.41	0.00	0.00	0.00	0.00	0.00
120	SEABED	-550.14	-42.67	0.00	651.50	0.572	0.000	12.41	0.00	0.00	0.00	0.00	0.00
121	SEABED	-556.19	-42.67	0.00	657.55	0.572	0.000	12.41	0.00	0.00	0.00	0.00	0.00
122	SEABED	-562.24	-42.67	0.00	663.60	0.572	0.000	12.41	0.00	0.00	0.00	0.00	0.00
123	SEABED	-568.29	-42.67	0.00	669.65	0.572	0.000	12.41	0.00	0.00	0.00	0.00	0.00
124	SEABED	-574.34	-42.67	0.00	675.70	0.572	0.000	12.41	0.00	0.00	0.00	0.00	0.00
125	SEABED	-580.39	-42.67	0.00	681.75	0.482	0.000	12.41	0.00	0.00	0.00	0.00	0.00
126	SEABED	-584.53	-42.67	-0.02	685.89	0.385	0.000	12.41	0.00	0.00	0.00	0.00	0.00
127	SEABED	-588.67	-42.67	-0.21	690.03	0.000	0.000	12.41	0.00	0.00	0.00	0.00	0.00

S T A T I C P I P E C O O R D I N A T E S, F O R C E S A N D S T R E S S E S

NODE NO.	PIPE SECTION	X COORD (M)	Y COORD (M)	VERT ANGLE (DEG)	PIPE LENGTH (M)	SUPPORT REACTION (KN)	SEPARA -TION (M)	AXIAL TENSION (KN)	BENDING MOMENT (KN-M)	TENSILE STRESS (MPA)	BENDING STRESS (MPA)	TOTAL STRESS (MPA)	PERCNT YIELD (PCT)
1	LAYBARGE	96.31	6.41	1.93	0.00	9.947	0.000	0.00	2.75	0.00	4.25	4.25	1.18
3	LAYBARGE	84.28	6.05	1.58	12.04	24.040	0.000	-0.73	-19.04	-0.07	-29.48	29.55	8.21
5	LAYBARGE	73.45	5.73	1.91	22.87	24.748	0.000	-1.40	-30.14	-0.13	-46.66	46.79	13.00
7	TENSIONR	60.11	5.24	2.28	36.23	30.572	0.000	20.92	-21.64	2.01	-33.50	35.52	9.87
9	LAYBARGE	51.10	4.87	2.20	45.24	0.000	0.000	20.21	23.68	1.95	36.65	38.60	10.72
10	LAYBARGE	46.45	4.70	2.05	49.89	18.408	0.000	19.88	0.54	1.91	0.84	2.75	0.76
12	LAYBARGE	35.36	4.31	2.13	60.99	12.575	0.000	19.06	-33.16	1.84	-51.33	53.17	14.77
14	LAYBARGE	23.34	3.62	5.35	73.04	57.424	0.000	16.66	-201.02	1.60	-311.21	312.81	86.89
16	LAYBARGE	19.27	3.17	7.04	77.13	0.000	0.000	16.53	-110.96	1.59	-171.78	173.38	48.16
17	LAYBARGE	8.90	1.76	7.99	87.60	14.711	0.000	13.97	7.98	1.34	12.36	13.71	3.81
19	LAYBARGE	4.90	1.21	7.68	91.63	0.000	0.000	12.80	49.24	1.23	76.22	77.46	21.52
20	LAYBARGE	3.05	0.96	7.42	93.49	0.000	0.345	12.29	59.33	1.18	91.85	93.03	25.84
24	STINGER	-7.43	-0.26	6.18	104.05	13.522	0.000	10.17	0.00	0.96	0.00	0.98	0.27
26	STINGER	-16.57	0.01	1.96	113.21	1.346	0.000	10.25	0.00	0.00	0.00	0.00	0.00
29	STINGER	-26.51	-0.97	9.14	123.19	1.287	0.000	10.25	0.00	0.00	0.00	0.00	0.00
31	STINGER	-37.17	-3.36	13.36	134.13	0.270	0.000	10.26	0.00	0.00	0.00	0.00	0.00
33	STINGER	-40.09	-4.10	14.03	137.14	0.000	0.377	10.26	0.00	0.00	0.00	0.00	0.00
35	SAGBEND	-46.14	-5.60	13.96	143.37	0.000	0.000	10.25	0.00	0.00	0.00	0.00	0.00
36	SAGBEND	-52.01	-7.06	13.87	149.42	0.000	0.000	10.25	0.00	0.00	0.00	0.00	0.00
37	SAGBEND	-57.88	-8.51	13.79	155.47	0.000	0.000	10.25	0.00	0.00	0.00	0.00	0.00
38	SAGBEND	-63.76	-9.94	13.70	161.52	0.000	0.000	10.24	0.00	0.00	0.00	0.00	0.00
39	SAGBEND	-69.64	-11.37	13.61	167.57	0.000	0.000	10.24	0.00	0.00	0.00	0.00	0.00
40	SAGBEND	-75.52	-12.79	13.53	173.62	0.000	0.000	10.23	0.00	0.00	0.00	0.00	0.00
41	SAGBEND	-81.40	-14.20	13.44	179.67	0.000	0.000	10.23	0.00	0.00	0.00	0.00	0.00
42	SAGBEND	-87.29	-15.60	13.36	185.72	0.000	0.000	10.23	0.00	0.00	0.00	0.00	0.00
43	SAGBEND	-93.18	-17.00	13.27	191.77	0.000	0.000	10.22	0.00	0.00	0.00	0.00	0.00
44	SAGBEND	-99.07	-18.38	13.18	197.82	0.000	0.000	10.22	0.00	0.00	0.00	0.00	0.00
45	SAGBEND	-104.96	-19.76	13.10	203.87	0.000	0.000	10.22	0.00	0.00	0.00	0.00	0.00
46	SAGBEND	-110.85	-21.12	13.01	209.92	0.000	0.000	10.21	0.00	0.00	0.00	0.00	0.00
47	SAGBEND	-116.75	-22.48	12.92	215.97	0.000	0.000	10.21	0.00	0.00	0.00	0.00	0.00
48	SAGBEND	-122.65	-23.83	12.84	222.02	0.000	0.000	10.21	0.00	0.00	0.00	0.00	0.00
49	SAGBEND	-128.54	-25.17	12.75	228.07	0.000	0.000	10.20	0.00	0.00	0.00	0.00	0.00
50	SAGBEND	-134.45	-26.50	12.66	234.12	0.000	0.000	10.20	0.00	0.00	0.00	0.00	0.00
51	SAGBEND	-140.35	-27.82	12.58	240.17	0.000	0.000	10.20	0.00	0.00	0.00	0.00	0.00
52	SAGBEND	-146.26	-29.13	12.49	246.22	0.000	0.000	10.19	0.00	0.00	0.00	0.00	0.00
53	SAGBEND	-152.16	-30.44	12.40	252.27	0.000	0.000	10.19	0.00	0.00	0.00	0.00	0.00
54	SAGBEND	-158.07	-31.73	12.32	258.32	0.000	0.000	10.19	0.00	0.00	0.00	0.00	0.00
55	SAGBEND	-163.99	-33.02	12.23	264.37	0.000	0.000	10.18	0.00	0.00	0.00	0.00	0.00
56	SAGBEND	-169.90	-34.30	12.14	270.42	0.000	0.000	10.18	0.00	0.00	0.00	0.00	0.00
57	SAGBEND	-175.81	-35.57	12.06	276.47	0.000	0.000	10.18	0.00	0.00	0.00	0.00	0.00
58	SAGBEND	-181.73	-36.83	11.97	282.52	0.000	0.000	10.17	0.00	0.00	0.00	0.00	0.00
59	SAGBEND	-187.65	-38.08	11.88	288.57	0.000	0.000	10.17	0.00	0.00	0.00	0.00	0.00
60	SAGBEND	-193.57	-39.32	11.80	294.62	0.000	0.000	10.17	0.00	0.00	0.00	0.00	0.00

S T A T I C P I P E C O O R D I N A T E S, F O R C E S A N D S T R E S S E S

NODE NO.	PIPE SECTION	X COORD (M)	Y COORD (M)	VERT ANGLE (DEG)	PIPE LENGTH (M)	SUPPORT REACTION (KN)	SEPARA -TION (M)	AXIAL TENSION (KN)	BENDING MOMENT (KN-M)	TENSILE STRESS (MPA)	BENDING STRESS (MPA)	TOTAL STRESS (MPA)	PERCNT YIELD (PCT)
61	SAGBEND	-198.94	-40.43	11.72	300.10	0.000	0.000	10.16	0.00	0.00	0.00	0.00	0.00
62	SAGBEND	-205.46	-41.58	8.23	306.72	0.000	0.000	10.05	0.00	0.00	0.00	0.00	0.00
63	SAGBEND	-211.47	-42.27	4.98	312.77	0.000	0.000	9.99	0.00	0.00	0.00	0.00	0.00
64	SAGBEND	-217.51	-42.63	1.72	318.82	0.055	0.000	9.96	0.00	0.00	0.00	0.00	0.00
65	SEABED	-223.55	-42.67	0.04	324.87	0.511	0.000	9.95	0.01	0.00	0.00	0.00	0.00
66	SEABED	-229.60	-42.67	0.01	330.92	0.572	0.000	9.95	0.00	0.00	0.00	0.00	0.00
67	SEABED	-235.65	-42.67	0.00	336.97	0.572	0.000	9.95	0.00	0.00	0.00	0.00	0.00
68	SEABED	-241.70	-42.67	0.00	343.02	0.572	0.000	9.95	0.00	0.00	0.00	0.00	0.00
69	SEABED	-247.75	-42.67	0.00	349.07	0.572	0.000	9.95	0.00	0.00	0.00	0.00	0.00
70	SEABED	-253.80	-42.67	0.00	355.12	0.572	0.000	9.95	0.00	0.00	0.00	0.00	0.00
71	SEABED	-259.85	-42.67	0.00	361.17	0.572	0.000	9.95	0.00	0.00	0.00	0.00	0.00
72	SEABED	-265.90	-42.67	0.00	367.22	0.572	0.000	9.95	0.00	0.00	0.00	0.00	0.00
73	SEABED	-271.95	-42.67	0.00	373.27	0.572	0.000	9.95	0.00	0.00	0.00	0.00	0.00
74	SEABED	-278.00	-42.67	0.00	379.32	0.572	0.000	9.95	0.00	0.00	0.00	0.00	0.00
75	SEABED	-284.05	-42.67	0.00	385.37	0.572	0.000	9.95	0.00	0.00	0.00	0.00	0.00
76	SEABED	-290.11	-42.67	0.00	391.42	0.572	0.000	9.95	0.00	0.00	0.00	0.00	0.00
77	SEABED	-296.16	-42.67	0.00	397.47	0.572	0.000	9.95	0.00	0.00	0.00	0.00	0.00
78	SEABED	-302.21	-42.67	0.00	403.52	0.572	0.000	9.95	0.00	0.00	0.00	0.00	0.00
79	SEABED	-308.26	-42.67	0.00	409.57	0.572	0.000	9.95	0.00	0.00	0.00	0.00	0.00
80	SEABED	-314.31	-42.67	0.00	415.62	0.572	0.000	9.95	0.00	0.00	0.00	0.00	0.00
81	SEABED	-320.36	-42.67	0.00	421.67	0.572	0.000	9.95	0.00	0.00	0.00	0.00	0.00
82	SEABED	-326.41	-42.67	0.00	427.72	0.572	0.000	9.95	0.00	0.00	0.00	0.00	0.00
83	SEABED	-332.46	-42.67	0.00	433.77	0.572	0.000	9.95	0.00	0.00	0.00	0.00	0.00
84	SEABED	-338.51	-42.67	0.00	439.82	0.572	0.000	9.95	0.00	0.00	0.00	0.00	0.00
85	SEABED	-344.56	-42.67	0.00	445.87	0.572	0.000	9.95	0.00	0.00	0.00	0.00	0.00
86	SEABED	-350.61	-42.67	0.00	451.92	0.572	0.000	9.95	0.00	0.00	0.00	0.00	0.00
87	SEABED	-356.66	-42.67	0.00	457.97	0.572	0.000	9.95	0.00	0.00	0.00	0.00	0.00
88	SEABED	-362.71	-42.67	0.00	464.02	0.572	0.000	9.95	0.00	0.00	0.00	0.00	0.00
89	SEABED	-368.76	-42.67	0.00	470.07	0.572	0.000	9.95	0.00	0.00	0.00	0.00	0.00
90	SEABED	-374.81	-42.67	0.00	476.12	0.572	0.000	9.95	0.00	0.00	0.00	0.00	0.00
91	SEABED	-380.86	-42.67	0.00	482.17	0.572	0.000	9.95	0.00	0.00	0.00	0.00	0.00
92	SEABED	-386.91	-42.67	0.00	488.22	0.572	0.000	9.95	0.00	0.00	0.00	0.00	0.00
93	SEABED	-392.96	-42.67	0.00	494.27	0.572	0.000	9.95	0.00	0.00	0.00	0.00	0.00
94	SEABED	-399.01	-42.67	0.00	500.32	0.572	0.000	9.95	0.00	0.00	0.00	0.00	0.00
95	SEABED	-405.06	-42.67	0.00	506.37	0.572	0.000	9.95	0.00	0.00	0.00	0.00	0.00
96	SEABED	-411.11	-42.67	0.00	512.42	0.572	0.000	9.95	0.00	0.00	0.00	0.00	0.00
97	SEABED	-417.16	-42.67	0.00	518.47	0.572	0.000	9.95	0.00	0.00	0.00	0.00	0.00
98	SEABED	-423.21	-42.67	0.00	524.52	0.572	0.000	9.95	0.00	0.00	0.00	0.00	0.00
99	SEABED	-429.26	-42.67	0.00	530.57	0.572	0.000	9.95	0.00	0.00	0.00	0.00	0.00
100	SEABED	-435.31	-42.67	0.00	536.62	0.572	0.000	9.95	0.00	0.00	0.00	0.00	0.00
101	SEABED	-441.36	-42.67	0.00	542.67	0.572	0.000	9.95	0.00	0.00	0.00	0.00	0.00
102	SEABED	-447.41	-42.67	0.00	548.72	0.572	0.000	9.95	0.00	0.00	0.00	0.00	0.00
103	SEABED	-453.46	-42.67	0.00	554.77	0.572	0.000	9.95	0.00	0.00	0.00	0.00	0.00
104	SEABED	-459.51	-42.67	0.00	560.82	0.572	0.000	9.95	0.00	0.00	0.00	0.00	0.00

S T A T I C P I P E C O O R D I N A T E S, F O R C E S A N D S T R E S S E S

NODE NO.	PIPE SECTION	X COORD (M)	Y COORD (M)	VERT ANGLE (DEG)	PIPE LENGTH (M)	SUPPORT REACTION (KN)	SEPARA -TION (M)	AXIAL TENSION (KN)	BENDING MOMENT (KN-M)	TENSILE STRESS (MPA)	BENDING STRESS (MPA)	TOTAL STRESS (MPA)	PERCNT YIELD (PCT)
105	SEABED	-465.56	-42.67	0.00	566.87	0.572	0.000	9.95	0.00	0.00	0.00	0.00	0.00
106	SEABED	-471.61	-42.67	0.00	572.92	0.572	0.000	9.95	0.00	0.00	0.00	0.00	0.00
107	SEABED	-477.66	-42.67	0.00	578.97	0.572	0.000	9.95	0.00	0.00	0.00	0.00	0.00
108	SEABED	-483.71	-42.67	0.00	585.02	0.572	0.000	9.95	0.00	0.00	0.00	0.00	0.00
109	SEABED	-489.76	-42.67	0.00	591.07	0.572	0.000	9.95	0.00	0.00	0.00	0.00	0.00
110	SEABED	-495.81	-42.67	0.00	597.12	0.572	0.000	9.95	0.00	0.00	0.00	0.00	0.00
111	SEABED	-501.86	-42.67	0.00	603.17	0.572	0.000	9.95	0.00	0.00	0.00	0.00	0.00

112	SEABED	-507.91	-42.67	0.00	609.22	0.572	0.000	9.95	0.00	0.00	0.00	0.00	0.00
113	SEABED	-513.96	-42.67	0.00	615.27	0.572	0.000	9.95	0.00	0.00	0.00	0.00	0.00
114	SEABED	-520.01	-42.67	0.00	621.32	0.572	0.000	9.95	0.00	0.00	0.00	0.00	0.00
115	SEABED	-526.06	-42.67	0.00	627.37	0.572	0.000	9.95	0.00	0.00	0.00	0.00	0.00
116	SEABED	-532.11	-42.67	0.00	633.42	0.572	0.000	9.95	0.00	0.00	0.00	0.00	0.00
117	SEABED	-538.16	-42.67	0.00	639.47	0.572	0.000	9.95	0.00	0.00	0.00	0.00	0.00
118	SEABED	-544.21	-42.67	0.00	645.52	0.572	0.000	9.95	0.00	0.00	0.00	0.00	0.00
119	SEABED	-550.26	-42.67	0.00	651.57	0.572	0.000	9.95	0.00	0.00	0.00	0.00	0.00
120	SEABED	-556.31	-42.67	0.00	657.62	0.572	0.000	9.95	0.00	0.00	0.00	0.00	0.00
121	SEABED	-562.36	-42.67	0.00	663.67	0.572	0.000	9.95	0.00	0.00	0.00	0.00	0.00
122	SEABED	-568.41	-42.67	0.00	669.72	0.572	0.000	9.95	0.00	0.00	0.00	0.00	0.00
123	SEABED	-574.46	-42.67	0.00	675.77	0.572	0.000	9.95	0.00	0.00	0.00	0.00	0.00
124	SEABED	-580.51	-42.67	0.00	681.82	0.572	0.000	9.95	0.00	0.00	0.00	0.00	0.00
125	SEABED	-586.56	-42.67	0.00	687.87	0.572	0.000	9.95	0.00	0.00	0.00	0.00	0.00
126	SEABED	-592.61	-42.67	0.00	693.92	0.432	0.000	9.95	0.00	0.00	0.00	0.00	0.00
127	SEABED	-595.70	-42.67	-0.02	697.01	0.284	0.000	9.95	0.00	0.00	0.00	0.00	0.00
128	SEABED	-598.79	-42.67	-0.26	700.10	0.000	0.000	9.95	0.00	0.00	0.00	0.00	0.00

S T A T I C P I P E C O O R D I N A T E S, F O R C E S A N D S T R E S S E S

NODE NO.	PIPE SECTION	X COORD (M)	Y COORD (M)	VERT ANGLE (DEG)	PIPE LENGTH (M)	SUPPORT REACTION (KN)	SEPARA -TION (M)	AXIAL TENSION (KN)	BENDING MOMENT (KN-M)	TENSILE STRESS (MPA)	BENDING STRESS (MPA)	TOTAL STRESS (MPA)	PERCNT YIELD (PCT)
1	LAYBARGE	96.31	6.41	1.93	0.00	9.948	0.000	0.00	2.75	0.00	4.25	4.25	1.18
3	LAYBARGE	84.28	6.05	1.58	12.04	24.038	0.000	-0.73	-19.04	-0.07	-29.48	29.55	8.21
5	LAYBARGE	73.45	5.73	1.91	22.87	24.753	0.000	-1.40	-30.15	-0.13	-46.67	46.81	13.00
7	TENSIONR	60.11	5.24	2.28	36.23	30.578	0.000	34.62	-21.60	3.33	-33.44	36.77	10.21
9	LAYBARGE	51.10	4.87	2.20	45.24	0.000	0.000	33.91	23.59	3.26	36.53	39.79	11.05
10	LAYBARGE	46.45	4.70	2.05	49.89	18.288	0.000	33.58	0.67	3.23	1.04	4.27	1.19
12	LAYBARGE	35.36	4.31	2.13	60.99	12.856	0.000	32.76	-33.27	3.15	-51.51	54.66	15.18
14	LAYBARGE	23.34	3.62	5.36	73.04	58.567	0.000	30.35	-201.89	2.92	-312.56	315.48	87.63
16	LAYBARGE	19.27	3.17	7.05	77.13	0.000	0.000	30.24	-110.71	2.91	-171.39	174.30	48.42
17	LAYBARGE	8.90	1.76	7.98	87.60	14.525	0.000	27.67	8.21	2.66	12.71	15.37	4.27
19	LAYBARGE	4.90	1.21	7.68	91.63	0.000	0.000	26.51	48.68	2.55	75.36	77.92	21.64
20	LAYBARGE	3.07	0.96	7.42	93.47	0.000	0.346	26.00	58.46	2.50	90.51	93.01	25.84
24	STINGER	-7.44	-0.27	6.19	104.05	11.429	0.000	23.87	0.00	2.28	0.00	2.30	0.64
26	STINGER	-16.57	0.01	2.44	113.21	3.517	0.000	24.03	0.00	0.00	0.00	0.00	0.00
29	STINGER	-26.49	-1.14	9.51	123.20	2.481	0.000	24.06	0.00	0.00	0.00	0.00	0.00
31	STINGER	-37.16	-3.49	12.41	134.13	0.000	0.399	24.09	0.00	0.00	0.00	0.00	0.00
33	STINGER	-40.09	-4.13	12.37	137.12	0.000	0.962	24.09	0.00	0.00	0.00	0.00	0.00
35	SAGBEND	-46.19	-5.47	12.34	143.37	0.000	0.000	24.08	0.00	0.00	0.00	0.00	0.00
36	SAGBEND	-52.10	-6.76	12.30	149.42	0.000	0.000	24.08	0.00	0.00	0.00	0.00	0.00
37	SAGBEND	-58.01	-8.05	12.26	155.47	0.000	0.000	24.08	0.00	0.00	0.00	0.00	0.00
38	SAGBEND	-63.92	-9.33	12.23	161.52	0.000	0.000	24.07	0.00	0.00	0.00	0.00	0.00
39	SAGBEND	-69.84	-10.61	12.19	167.57	0.000	0.000	24.07	0.00	0.00	0.00	0.00	0.00
40	SAGBEND	-75.75	-11.89	12.15	173.62	0.000	0.000	24.07	0.00	0.00	0.00	0.00	0.00
41	SAGBEND	-81.67	-13.16	12.12	179.67	0.000	0.000	24.06	0.00	0.00	0.00	0.00	0.00
42	SAGBEND	-87.58	-14.42	12.08	185.72	0.000	0.000	24.06	0.00	0.00	0.00	0.00	0.00
43	SAGBEND	-93.50	-15.69	12.04	191.77	0.000	0.000	24.06	0.00	0.00	0.00	0.00	0.00
44	SAGBEND	-99.42	-16.95	12.01	197.82	0.000	0.000	24.05	0.00	0.00	0.00	0.00	0.00
45	SAGBEND	-105.33	-18.21	11.97	203.87	0.000	0.000	24.05	0.00	0.00	0.00	0.00	0.00
46	SAGBEND	-111.25	-19.46	11.93	209.92	0.000	0.000	24.05	0.00	0.00	0.00	0.00	0.00
47	SAGBEND	-117.17	-20.71	11.90	215.97	0.000	0.000	24.05	0.00	0.00	0.00	0.00	0.00
48	SAGBEND	-123.09	-21.95	11.86	222.02	0.000	0.000	24.04	0.00	0.00	0.00	0.00	0.00
49	SAGBEND	-129.01	-23.19	11.82	228.07	0.000	0.000	24.04	0.00	0.00	0.00	0.00	0.00
50	SAGBEND	-134.94	-24.43	11.79	234.12	0.000	0.000	24.04	0.00	0.00	0.00	0.00	0.00
51	SAGBEND	-140.86	-25.67	11.75	240.17	0.000	0.000	24.03	0.00	0.00	0.00	0.00	0.00
52	SAGBEND	-146.78	-26.90	11.71	246.22	0.000	0.000	24.03	0.00	0.00	0.00	0.00	0.00
53	SAGBEND	-152.71	-28.12	11.67	252.27	0.000	0.000	24.03	0.00	0.00	0.00	0.00	0.00
54	SAGBEND	-158.63	-29.34	11.64	258.32	0.000	0.000	24.02	0.00	0.00	0.00	0.00	0.00
55	SAGBEND	-164.56	-30.56	11.60	264.37	0.000	0.000	24.02	0.00	0.00	0.00	0.00	0.00
56	SAGBEND	-170.49	-31.78	11.56	270.42	0.000	0.000	24.02	0.00	0.00	0.00	0.00	0.00
57	SAGBEND	-176.41	-32.99	11.53	276.47	0.000	0.000	24.01	0.00	0.00	0.00	0.00	0.00
58	SAGBEND	-182.34	-34.20	11.49	282.52	0.000	0.000	24.01	0.00	0.00	0.00	0.00	0.00
59	SAGBEND	-188.27	-35.40	11.45	288.57	0.000	0.000	24.01	0.00	0.00	0.00	0.00	0.00
60	SAGBEND	-194.20	-36.60	11.42	294.62	0.000	0.000	24.00	0.00	0.00	0.00	0.00	0.00

S T A T I C P I P E C O O R D I N A T E S, F O R C E S A N D S T R E S S E S

NODE NO.	PIPE SECTION	X COORD (M)	Y COORD (M)	VERT ANGLE (DEG)	PIPE LENGTH (M)	SUPPORT REACTION (KN)	SEPARA -TION (M)	AXIAL TENSION (KN)	BENDING MOMENT (KN-M)	TENSILE STRESS (MPA)	BENDING STRESS (MPA)	TOTAL STRESS (MPA)	PERCNT YIELD (PCT)
61	SAGBEND	-199.57	-37.68	11.38	300.10	0.000	0.000	24.00	0.00	0.00	0.00	0.00	0.00
62	SAGBEND	-206.08	-38.90	9.91	306.72	0.000	0.000	23.89	0.00	0.00	0.00	0.00	0.00
63	SAGBEND	-212.05	-39.87	8.55	312.77	0.000	0.000	23.79	0.00	0.00	0.00	0.00	0.00
64	SAGBEND	-218.04	-40.70	7.19	318.82	0.000	0.000	23.71	0.00	0.00	0.00	0.00	0.00
65	SAGBEND	-224.05	-41.39	5.81	324.87	0.000	0.000	23.65	0.00	0.00	0.00	0.00	0.00
66	SAGBEND	-230.08	-41.93	4.43	330.92	0.000	0.000	23.60	0.00	0.00	0.00	0.00	0.00
67	SAGBEND	-236.12	-42.32	3.04	336.97	0.000	0.000	23.56	0.00	0.00	0.00	0.00	0.00
68	SAGBEND	-242.16	-42.57	1.64	343.02	0.000	0.000	23.54	0.00	0.00	0.00	0.00	0.00
69	SAGBEND	-248.21	-42.67	0.21	349.07	0.192	0.000	23.53	0.01	0.00	0.00	0.00	0.00
70	SEABED	-254.26	-42.67	0.02	355.12	0.562	0.000	23.53	0.01	0.00	0.00	0.00	0.00
71	SEABED	-260.31	-42.67	0.00	361.17	0.572	0.000	23.53	0.00	0.00	0.00	0.00	0.00
72	SEABED	-266.36	-42.67	0.00	367.22	0.572	0.000	23.53	0.00	0.00	0.00	0.00	0.00
73	SEABED	-272.41	-42.67	0.00	373.27	0.572	0.000	23.53	0.00	0.00	0.00	0.00	0.00
74	SEABED	-278.46	-42.67	0.00	379.32	0.572	0.000	23.53	0.00	0.00	0.00	0.00	0.00
75	SEABED	-284.51	-42.67	0.00	385.37	0.572	0.000	23.53	0.00	0.00	0.00	0.00	0.00
76	SEABED	-290.56	-42.67	0.00	391.42	0.572	0.000	23.53	0.00	0.00	0.00	0.00	0.00
77	SEABED	-296.61	-42.67	0.00	397.47	0.572	0.000	23.53	0.00	0.00	0.00	0.00	0.00
78	SEABED	-302.66	-42.67	0.00	403.52	0.572	0.000	23.53	0.00	0.00	0.00	0.00	0.00
79	SEABED	-308.71	-42.67	0.00	409.57	0.572	0.000	23.53	0.00	0.00	0.00	0.00	0.00
80	SEABED	-314.76	-42.67	0.00	415.62	0.572	0.000	23.53	0.00	0.00	0.00	0.00	0.00
81	SEABED	-320.81	-42.67	0.00	421.67	0.572	0.000	23.53	0.00	0.00	0.00	0.00	0.00
82	SEABED	-326.86	-42.67	0.00	427.72	0.572	0.000	23.53	0.00	0.00	0.00	0.00	0.00
83	SEABED	-332.91	-42.67	0.00	433.77	0.572	0.000	23.53	0.00	0.00	0.00	0.00	0.00
84	SEABED	-338.96	-42.67	0.00	439.82	0.572	0.000	23.53	0.00	0.00	0.00	0.00	0.00
85	SEABED	-345.01	-42.67	0.00	445.87	0.572	0.000	23.53	0.00	0.00	0.00	0.00	0.00
86	SEABED	-351.06	-42.67	0.00	451.92	0.572	0.000	23.53	0.00	0.00	0.00	0.00	0.00
87	SEABED	-357.11	-42.67	0.00	457.97	0.572	0.000	23.53	0.00	0.00	0.00	0.00	0.00
88	SEABED	-363.16	-42.67	0.00	464.02	0.572	0.000	23.53	0.00	0.00	0.00	0.00	0.00
89	SEABED	-369.21	-42.67	0.00	470.07	0.572	0.000	23.53	0.00	0.00	0.00	0.00	0.00
90	SEABED	-375.26	-42.67	0.00	476.12	0.572	0.000	23.53	0.00	0.00	0.00	0.00	0.00
91	SEABED	-381.31	-42.67	0.00	482.17	0.572	0.000	23.53	0.00	0.00	0.00	0.00	0.00
92	SEABED	-387.36	-42.67	0.00	488.22	0.572	0.000	23.53	0.00	0.00	0.00	0.00	0.00
93	SEABED	-393.41	-42.67	0.00	494.27	0.572	0.000	23.53	0.00	0.00	0.00	0.00	0.00
94	SEABED	-399.46	-42.67	0.00	500.32	0.572	0.000	23.53	0.00	0.00	0.00	0.00	0.00
95	SEABED	-405.51	-42.67	0.00	506.37	0.572	0.000	23.53	0.00	0.00	0.00	0.00	0.00
96	SEABED	-411.56	-42.67	0.00	512.42	0.572	0.000	23.53	0.00	0.00	0.00	0.00	0.00
97	SEABED	-417.61	-42.67	0.00	518.47	0.572	0.000	23.53	0.00	0.00	0.00	0.00	0.00
98	SEABED	-423.66	-42.67	0.00	524.52	0.572	0.000	23.53	0.00	0.00	0.00	0.00	0.00
99	SEABED	-429.71	-42.67	0.00	530.57	0.572	0.000	23.53	0.00	0.00	0.00	0.00	0.00
100	SEABED	-435.76	-42.67	0.00	536.62	0.572	0.000	23.53	0.00	0.00	0.00	0.00	0.00
101	SEABED	-441.81	-42.67	0.00	542.67	0.572	0.000	23.53	0.00	0.00	0.00	0.00	0.00
102	SEABED	-447.86	-42.67	0.00	548.72	0.572	0.000	23.53	0.00	0.00	0.00	0.00	0.00
103	SEABED	-453.91	-42.67	0.00	554.77	0.572	0.000	23.53	0.00	0.00	0.00	0.00	0.00
104	SEABED	-459.96	-42.67	0.00	560.82	0.572	0.000	23.53	0.00	0.00	0.00	0.00	0.00

S T A T I C P I P E C O O R D I N A T E S, F O R C E S A N D S T R E S S E S

NODE NO.	PIPE SECTION	X COORD (M)	Y COORD (M)	VERT ANGLE (DEG)	PIPE LENGTH (M)	SUPPORT REACTION (KN)	SEPARA -TION (M)	AXIAL TENSION (KN)	BENDING MOMENT (KN-M)	TENSILE STRESS (MPA)	BENDING STRESS (MPA)	TOTAL STRESS (MPA)	PERCNT YIELD (PCT)
105	SEABED	-466.01	-42.67	0.00	566.87	0.572	0.000	23.53	0.00	0.00	0.00	0.00	0.00
106	SEABED	-472.06	-42.67	0.00	572.92	0.572	0.000	23.53	0.00	0.00	0.00	0.00	0.00
107	SEABED	-478.11	-42.67	0.00	578.97	0.572	0.000	23.53	0.00	0.00	0.00	0.00	0.00
108	SEABED	-484.16	-42.67	0.00	585.02	0.572	0.000	23.53	0.00	0.00	0.00	0.00	0.00
109	SEABED	-490.21	-42.67	0.00	591.07	0.572	0.000	23.53	0.00	0.00	0.00	0.00	0.00
110	SEABED	-496.26	-42.67	0.00	597.12	0.572	0.000	23.53	0.00	0.00	0.00	0.00	0.00
111	SEABED	-502.31	-42.67	0.00	603.17	0.572	0.000	23.53	0.00	0.00	0.00	0.00	0.00
112	SEABED	-508.36	-42.67	0.00	609.22	0.572	0.000	23.53	0.00	0.00	0.00	0.00	0.00
113	SEABED	-514.41	-42.67	0.00	615.27	0.572	0.000	23.53	0.00	0.00	0.00	0.00	0.00
114	SEABED	-520.46	-42.67	0.00	621.32	0.572	0.000	23.53	0.00	0.00	0.00	0.00	0.00
115	SEABED	-526.51	-42.67	0.00	627.37	0.572	0.000	23.53	0.00	0.00	0.00	0.00	0.00
116	SEABED	-532.56	-42.67	0.00	633.42	0.572	0.000	23.53	0.00	0.00	0.00	0.00	0.00
117	SEABED	-538.61	-42.67	0.00	639.47	0.572	0.000	23.53	0.00	0.00	0.00	0.00	0.00
118	SEABED	-544.66	-42.67	0.00	645.52	0.572	0.000	23.53	0.00	0.00	0.00	0.00	0.00
119	SEABED	-550.71	-42.67	0.00	651.57	0.572	0.000	23.53	0.00	0.00	0.00	0.00	0.00
120	SEABED	-556.76	-42.67	0.00	657.62	0.572	0.000	23.53	0.00	0.00	0.00	0.00	0.00
121	SEABED	-562.81	-42.67	0.00	663.67	0.572	0.000	23.53	0.00	0.00	0.00	0.00	0.00
122	SEABED	-568.86	-42.67	0.00	669.72	0.572	0.000	23.53	0.00	0.00	0.00	0.00	0.00
123	SEABED	-574.91	-42.67	0.00	675.77	0.572	0.000	23.53	0.00	0.00	0.00	0.00	0.00
124	SEABED	-580.96	-42.67	0.00	681.82	0.572	0.000	23.53	0.00	0.00	0.00	0.00	0.00
125	SEABED	-587.01	-42.67	0.00	687.87	0.572	0.000	23.53	0.00	0.00	0.00	0.00	0.00
126	SEABED	-593.06	-42.67	0.00	693.92	0.432	0.000	23.53	0.00	0.00	0.00	0.00	0.00
127	SEABED	-596.15	-42.67	-0.01	697.01	0.272	0.000	23.53	0.00	0.00	0.00	0.00	0.00

128	SEABED	-599.24	-42.67	-0.19	700.10	0.000	0.000	23.53	0.00	0.00	0.00	0.00	0.00

S T A T I C P I P E C O O R D I N A T E S, F O R C E S A N D S T R E S S E S

NODE NO.	PIPE SECTION	X COORD (M)	Y COORD (M)	VERT ANGLE (DEG)	PIPE LENGTH (M)	SUPPORT REACTION (KN)	SEPARA -TION (M)	AXIAL TENSION (KN)	BENDING MOMENT (KN-M)	TENSILE STRESS (MPA)	BENDING STRESS (MPA)	TOTAL STRESS (MPA)	PERCNT YIELD (PCT)
1	LAYBARGE	96.31	6.41	1.93	0.00	9.947	0.000	0.00	2.75	0.00	4.25	4.25	1.18
3	LAYBARGE	84.28	6.05	1.58	12.04	24.042	0.000	-0.73	-19.05	-0.07	-29.49	29.56	8.21
5	LAYBARGE	73.45	5.73	1.91	22.87	24.742	0.000	-1.39	-30.12	-0.13	-46.64	46.77	12.99
7	TENSIONR	60.11	5.24	2.28	36.23	30.615	0.000	34.62	-21.66	3.33	-33.53	36.86	10.24
9	LAYBARGE	51.10	4.87	2.20	45.24	0.000	0.000	33.90	23.77	3.26	36.80	40.07	11.13
10	LAYBARGE	46.45	4.70	2.04	49.89	18.110	0.000	33.58	0.94	3.23	1.45	4.69	1.30
12	LAYBARGE	35.36	4.31	2.14	60.99	13.523	0.000	32.76	-34.11	3.15	-52.80	55.96	15.54
14	LAYBARGE	23.34	3.62	5.31	73.04	56.538	0.000	30.39	-197.55	2.93	-305.84	308.77	85.77
16	LAYBARGE	19.27	3.18	6.98	77.13	0.000	0.000	30.24	-111.87	2.91	-173.19	176.10	48.92
17	LAYBARGE	8.90	1.76	8.16	87.60	23.543	0.000	27.66	-6.42	2.66	-9.94	12.61	3.50
19	LAYBARGE	4.90	1.19	7.88	91.63	0.000	0.000	26.44	61.45	2.55	95.14	97.69	27.13
20	LAYBARGE	3.08	0.94	7.53	93.47	0.000	0.325	25.87	84.88	2.49	131.41	133.90	37.20
24	STINGER	-7.54	-0.18	4.49	104.15	0.000	0.374	23.71	104.76	2.27	162.19	164.47	45.69
26	STINGER	-16.66	-0.75	3.11	113.29	17.367	0.000	23.38	0.00	2.21	0.00	2.25	0.63
29	STINGER	-26.51	-1.94	9.33	123.21	2.050	0.000	23.41	0.00	0.00	0.00	0.00	0.00
31	STINGER	-37.20	-4.17	11.78	134.14	0.000	0.078	23.42	0.00	0.00	0.00	0.00	0.00
33	STINGER	-40.17	-4.79	11.75	137.17	0.000	0.553	23.42	0.00	0.00	0.00	0.00	0.00
35	SAGBEND	-46.26	-6.06	11.71	143.40	0.000	0.000	23.42	0.00	0.00	0.00	0.00	0.00
36	SAGBEND	-52.19	-7.28	11.67	149.44	0.000	0.000	23.42	0.00	0.00	0.00	0.00	0.00
37	SAGBEND	-58.11	-8.51	11.64	155.49	0.000	0.000	23.41	0.00	0.00	0.00	0.00	0.00
38	SAGBEND	-64.04	-9.72	11.60	161.54	0.000	0.000	23.41	0.00	0.00	0.00	0.00	0.00
39	SAGBEND	-69.97	-10.94	11.56	167.59	0.000	0.000	23.41	0.00	0.00	0.00	0.00	0.00
40	SAGBEND	-75.89	-12.15	11.52	173.64	0.000	0.000	23.40	0.00	0.00	0.00	0.00	0.00
41	SAGBEND	-81.82	-13.36	11.48	179.69	0.000	0.000	23.40	0.00	0.00	0.00	0.00	0.00
42	SAGBEND	-87.75	-14.56	11.45	185.74	0.000	0.000	23.40	0.00	0.00	0.00	0.00	0.00
43	SAGBEND	-93.68	-15.76	11.41	191.79	0.000	0.000	23.39	0.00	0.00	0.00	0.00	0.00
44	SAGBEND	-99.61	-16.95	11.37	197.84	0.000	0.000	23.39	0.00	0.00	0.00	0.00	0.00
45	SAGBEND	-105.55	-18.14	11.33	203.89	0.000	0.000	23.39	0.00	0.00	0.00	0.00	0.00
46	SAGBEND	-111.48	-19.33	11.30	209.94	0.000	0.000	23.38	0.00	0.00	0.00	0.00	0.00
47	SAGBEND	-117.41	-20.51	11.26	215.99	0.000	0.000	23.38	0.00	0.00	0.00	0.00	0.00
48	SAGBEND	-123.34	-21.69	11.22	222.04	0.000	0.000	23.38	0.00	0.00	0.00	0.00	0.00
49	SAGBEND	-129.28	-22.87	11.18	228.09	0.000	0.000	23.38	0.00	0.00	0.00	0.00	0.00
50	SAGBEND	-135.22	-24.04	11.14	234.14	0.000	0.000	23.37	0.00	0.00	0.00	0.00	0.00
51	SAGBEND	-141.15	-25.21	11.10	240.19	0.000	0.000	23.37	0.00	0.00	0.00	0.00	0.00
52	SAGBEND	-147.09	-26.37	11.07	246.24	0.000	0.000	23.37	0.00	0.00	0.00	0.00	0.00
53	SAGBEND	-153.03	-27.53	11.03	252.29	0.000	0.000	23.36	0.00	0.00	0.00	0.00	0.00
54	SAGBEND	-158.96	-28.68	10.99	258.34	0.000	0.000	23.36	0.00	0.00	0.00	0.00	0.00
55	SAGBEND	-164.90	-29.83	10.95	264.39	0.000	0.000	23.36	0.00	0.00	0.00	0.00	0.00
56	SAGBEND	-170.84	-30.98	10.91	270.44	0.000	0.000	23.35	0.00	0.00	0.00	0.00	0.00
57	SAGBEND	-176.79	-32.13	10.88	276.49	0.000	0.000	23.35	0.00	0.00	0.00	0.00	0.00
58	SAGBEND	-182.73	-33.27	10.84	282.54	0.000	0.000	23.35	0.00	0.00	0.00	0.00	0.00
59	SAGBEND	-188.67	-34.40	10.80	288.59	0.000	0.000	23.35	0.00	0.00	0.00	0.00	0.00
60	SAGBEND	-194.61	-35.53	10.76	294.64	0.000	0.000	23.34	0.00	0.00	0.00	0.00	0.00

S T A T I C P I P E C O O R D I N A T E S, F O R C E S A N D S T R E S S E S

NODE NO.	PIPE SECTION	X COORD (M)	Y COORD (M)	VERT ANGLE (DEG)	PIPE LENGTH (M)	SUPPORT REACTION (KN)	SEPARA -TION (M)	AXIAL TENSION (KN)	BENDING MOMENT (KN-M)	TENSILE STRESS (MPA)	BENDING STRESS (MPA)	TOTAL STRESS (MPA)	PERCNT YIELD (PCT)
61	SAGBEND	-200.56	-36.66	10.72	300.69	0.000	0.000	23.34	0.00	0.00	0.00	0.00	0.00
62	SAGBEND	-206.50	-37.78	10.69	306.74	0.000	0.000	23.34	0.00	0.00	0.00	0.00	0.00
63	SAGBEND	-209.82	-38.41	10.67	310.13	0.000	0.000	23.34	0.00	0.00	0.00	0.00	0.00
64	SAGBEND	-214.12	-39.18	9.67	314.49	0.000	0.000	23.26	0.00	0.00	0.00	0.00	0.00
65	SAGBEND	-218.42	-39.87	8.66	318.84	0.000	0.000	23.20	0.00	0.00	0.00	0.00	0.00
66	SAGBEND	-224.41	-40.71	7.26	324.89	0.000	0.000	23.12	0.00	0.00	0.00	0.00	0.00
67	SAGBEND	-230.42	-41.40	5.85	330.94	0.000	0.000	23.05	0.00	0.00	0.00	0.00	0.00
68	SAGBEND	-236.45	-41.95	4.43	336.99	0.000	0.000	23.00	0.00	0.00	0.00	0.00	0.00
69	SAGBEND	-242.48	-42.34	3.01	343.04	0.000	0.000	22.96	0.00	0.00	0.00	0.00	0.00
70	SAGBEND	-248.53	-42.58	1.58	349.09	0.000	0.000	22.94	0.00	0.00	0.00	0.00	0.00
71	SEABED	-254.58	-42.67	0.12	355.14	0.232	0.000	22.93	0.01	0.00	0.00	0.00	0.00
72	SEABED	-260.63	-42.67	0.01	361.19	0.566	0.000	22.93	0.01	0.00	0.00	0.00	0.00
73	SEABED	-266.68	-42.67	0.00	367.24	0.572	0.000	22.93	0.00	0.00	0.00	0.00	0.00
74	SEABED	-272.73	-42.67	0.00	373.29	0.572	0.000	22.93	0.00	0.00	0.00	0.00	0.00
75	SEABED	-278.78	-42.67	0.00	379.34	0.572	0.000	22.93	0.00	0.00	0.00	0.00	0.00
76	SEABED	-284.83	-42.67	0.00	385.39	0.572	0.000	22.93	0.00	0.00	0.00	0.00	0.00
77	SEABED	-290.88	-42.67	0.00	391.44	0.572	0.000	22.93	0.00	0.00	0.00	0.00	0.00
78	SEABED	-296.93	-42.67	0.00	397.49	0.572	0.000	22.93	0.00	0.00	0.00	0.00	0.00
79	SEABED	-302.98	-42.67	0.00	403.54	0.572	0.000	22.93	0.00	0.00	0.00	0.00	0.00
80	SEABED	-309.03	-42.67	0.00	409.59	0.572	0.000	22.93	0.00	0.00	0.00	0.00	0.00
81	SEABED	-315.08	-42.67	0.00	415.64	0.572	0.000	22.93	0.00	0.00	0.00	0.00	0.00
82	SEABED	-321.13	-42.67	0.00	421.69	0.572	0.000	22.93	0.00	0.00	0.00	0.00	0.00
83	SEABED	-327.18	-42.67	0.00	427.74	0.572	0.000	22.93	0.00	0.00	0.00	0.00	0.00
84	SEABED	-333.23	-42.67	0.00	433.79	0.572	0.000	22.93	0.00	0.00	0.00	0.00	0.00
85	SEABED	-339.28	-42.67	0.00	439.84	0.572	0.000	22.93	0.00	0.00	0.00	0.00	0.00
86	SEABED	-345.33	-42.67	0.00	445.89	0.572	0.000	22.93	0.00	0.00	0.00	0.00	0.00
87	SEABED	-351.38	-42.67	0.00	451.94	0.572	0.000	22.93	0.00	0.00	0.00	0.00	0.00
88	SEABED	-357.43	-42.67	0.00	457.99	0.572	0.000	22.93	0.00	0.00	0.00	0.00	0.00
89	SEABED	-363.48	-42.67	0.00	464.04	0.572	0.000	22.93	0.00	0.00	0.00	0.00	0.00
90	SEABED	-369.53	-42.67	0.00	470.09	0.572	0.000	22.93	0.00	0.00	0.00	0.00	0.00
91	SEABED	-375.58	-42.67	0.00	476.14	0.572	0.000	22.93	0.00	0.00	0.00	0.00	0.00
92	SEABED	-381.63	-42.67	0.00	482.19	0.572	0.000	22.93	0.00	0.00	0.00	0.00	0.00
93	SEABED	-387.68	-42.67	0.00	488.24	0.572	0.000	22.93	0.00	0.00	0.00	0.00	0.00
94	SEABED	-393.73	-42.67	0.00	494.29	0.572	0.000	22.93	0.00	0.00	0.00	0.00	0.00
95	SEABED	-399.78	-42.67	0.00	500.34	0.572	0.000	22.93	0.00	0.00	0.00	0.00	0.00
96	SEABED	-405.83	-42.67	0.00	506.39	0.572	0.000	22.93	0.00	0.00	0.00	0.00	0.00
97	SEABED	-411.88	-42.67	0.00	512.44	0.572	0.000	22.93	0.00	0.00	0.00	0.00	0.00
98	SEABED	-417.93	-42.67	0.00	518.49	0.572	0.000	22.93	0.00	0.00	0.00	0.00	0.00
99	SEABED	-423.98	-42.67	0.00	524.54	0.572	0.000	22.93	0.00	0.00	0.00	0.00	0.00
100	SEABED	-430.03	-42.67	0.00	530.59	0.572	0.000	22.93	0.00	0.00	0.00	0.00	0.00
101	SEABED	-436.08	-42.67	0.00	536.65	0.572	0.000	22.93	0.00	0.00	0.00	0.00	0.00
102	SEABED	-442.13	-42.67	0.00	542.70	0.572	0.000	22.93	0.00	0.00	0.00	0.00	0.00
103	SEABED	-448.18	-42.67	0.00	548.75	0.572	0.000	22.93	0.00	0.00	0.00	0.00	0.00
104	SEABED	-454.23	-42.67	0.00	554.80	0.572	0.000	22.93	0.00	0.00	0.00	0.00	0.00

S T A T I C P I P E C O O R D I N A T E S, F O R C E S A N D S T R E S S E S

NODE NO.	PIPE SECTION	X COORD (M)	Y COORD (M)	VERT ANGLE (DEG)	PIPE LENGTH (M)	SUPPORT REACTION (KN)	SEPARA -TION (M)	AXIAL TENSION (KN)	BENDING MOMENT (KN-M)	TENSILE STRESS (MPA)	BENDING STRESS (MPA)	TOTAL STRESS (MPA)	PERCNT YIELD (PCT)
105	SEABED	-460.28	-42.67	0.00	560.85	0.572	0.000	22.93	0.00	0.00	0.00	0.00	0.00
106	SEABED	-466.33	-42.67	0.00	566.90	0.572	0.000	22.93	0.00	0.00	0.00	0.00	0.00
107	SEABED	-472.38	-42.67	0.00	572.95	0.572	0.000	22.93	0.00	0.00	0.00	0.00	0.00
108	SEABED	-478.43	-42.67	0.00	579.00	0.572	0.000	22.93	0.00	0.00	0.00	0.00	0.00
109	SEABED	-484.48	-42.67	0.00	585.05	0.572	0.000	22.93	0.00	0.00	0.00	0.00	0.00
110	SEABED	-490.53	-42.67	0.00	591.10	0.572	0.000	22.93	0.00	0.00	0.00	0.00	0.00
111	SEABED	-496.58	-42.67	0.00	597.15	0.572	0.000	22.93	0.00	0.00	0.00	0.00	0.00
112	SEABED	-502.63	-42.67	0.00	603.20	0.572	0.000	22.93	0.00	0.00	0.00	0.00	0.00
113	SEABED	-508.68	-42.67	0.00	609.25	0.572	0.000	22.93	0.00	0.00	0.00	0.00	0.00
114	SEABED	-514.73	-42.67	0.00	615.30	0.572	0.000	22.93	0.00	0.00	0.00	0.00	0.00
115	SEABED	-520.78	-42.67	0.00	621.35	0.572	0.000	22.93	0.00	0.00	0.00	0.00	0.00
116	SEABED	-526.83	-42.67	0.00	627.40	0.572	0.000	22.93	0.00	0.00	0.00	0.00	0.00
117	SEABED	-532.88	-42.67	0.00	633.45	0.572	0.000	22.93	0.00	0.00	0.00	0.00	0.00
118	SEABED	-538.93	-42.67	0.00	639.50	0.572	0.000	22.93	0.00	0.00	0.00	0.00	0.00
119	SEABED	-544.98	-42.67	0.00	645.55	0.572	0.000	22.93	0.00	0.00	0.00	0.00	0.00
120	SEABED	-551.03	-42.67	0.00	651.60	0.572	0.000	22.93	0.00	0.00	0.00	0.00	0.00
121	SEABED	-557.08	-42.67	0.00	657.65	0.572	0.000	22.93	0.00	0.00	0.00	0.00	0.00
122	SEABED	-563.13	-42.67	0.00	663.70	0.572	0.000	22.93	0.00	0.00	0.00	0.00	0.00
123	SEABED	-569.18	-42.67	0.00	669.75	0.572	0.000	22.93	0.00	0.00	0.00	0.00	0.00
124	SEABED	-575.23	-42.67	0.00	675.80	0.572	0.000	22.93	0.00	0.00	0.00	0.00	0.00
125	SEABED	-581.28	-42.67	0.00	681.85	0.572	0.000	22.93	0.00	0.00	0.00	0.00	0.00
126	SEABED	-587.33	-42.67	0.00	687.90	0.572	0.000	22.93	0.00	0.00	0.00	0.00	0.00
127	SEABED	-593.38	-42.67	0.00	693.95	0.572	0.000	22.93	0.00	0.00	0.00	0.00	0.00
128	SEABED	-599.43	-42.67	0.00	700.00	0.572	0.000	22.93	0.00	0.00	0.00	0.00	0.00
129	SEABED	-605.48	-42.67	-0.01	706.05	0.464	0.000	22.93	0.00	0.00	0.00	0.00	0.00
130	SEABED	-609.56	-42.67	-0.18	710.13	0.000	0.000	22.93	0.00	0.00	0.00	0.00	0.00

S T A T I C P I P E C O O R D I N A T E S, F O R C E S A N D S T R E S S E S

NODE NO.	PIPE SECTION	X COORD (M)	Y COORD (M)	VERT ANGLE (DEG)	PIPE LENGTH (M)	SUPPORT REACTION (KN)	SEPARA -TION (M)	AXIAL TENSION (KN)	BENDING MOMENT (KN-M)	TENSILE STRESS (MPA)	BENDING STRESS (MPA)	TOTAL STRESS (MPA)	PERCNT YIELD (PCT)

1	LAYBARGE	96.31	6.41	1.93	0.00	9.947	0.000	0.00	2.75	0.00	4.25	4.25	1.18
3	LAYBARGE	84.28	6.05	1.58	12.04	24.042	0.000	-0.73	-19.05	-0.07	-29.49	29.56	8.21
5	LAYBARGE	73.45	5.73	1.91	22.87	24.741	0.000	-1.39	-30.12	-0.13	-46.64	46.77	12.99
7	TENSIONR	60.11	5.24	2.28	36.23	30.640	0.000	48.23	-21.65	4.64	-33.51	38.15	10.60
9	LAYBARGE	51.10	4.87	2.20	45.24	0.000	0.000	47.51	23.78	4.57	36.82	41.39	11.50
10	LAYBARGE	46.45	4.70	2.04	49.89	17.897	0.000	47.18	1.21	4.54	1.87	6.41	1.78
12	LAYBARGE	35.36	4.31	2.15	60.99	14.159	0.000	46.36	-34.66	4.46	-53.66	58.12	16.15
14	LAYBARGE	23.34	3.62	5.29	73.04	56.567	0.000	44.01	-196.08	4.24	-303.56	307.80	85.50
16	LAYBARGE	19.27	3.18	6.96	77.13	0.000	0.000	43.84	-112.22	4.22	-173.73	177.95	49.43
17	LAYBARGE	8.90	1.76	8.25	87.60	24.102	0.000	41.26	-15.41	3.97	-23.86	27.83	7.73
19	LAYBARGE	4.90	1.18	8.07	91.63	0.000	0.000	40.06	50.52	3.86	78.22	82.08	22.80
20	LAYBARGE	3.08	0.93	7.78	93.47	0.000	0.308	39.48	73.20	3.80	113.33	117.13	32.54
24	STINGER	-7.54	-0.28	5.05	104.16	0.000	0.354	37.26	95.45	3.57	147.78	151.36	42.05
26	STINGER	-16.65	-0.95	3.79	113.30	17.158	0.000	36.79	0.00	3.49	0.00	3.54	0.98
29	STINGER	-26.47	-2.26	9.25	123.21	2.180	0.000	36.85	0.00	0.00	0.00	0.00	0.00
31	STINGER	-37.20	-4.33	10.90	134.14	0.000	0.380	36.86	0.00	0.00	0.00	0.00	0.00
33	STINGER	-40.18	-4.90	10.88	137.17	0.000	0.936	36.86	0.00	0.00	0.00	0.00	0.00
35	SAGBEND	-46.29	-6.07	10.86	143.39	0.000	0.000	36.86	0.00	0.00	0.00	0.00	0.00
36	SAGBEND	-52.23	-7.21	10.84	149.44	0.000	0.000	36.86	0.00	0.00	0.00	0.00	0.00
37	SAGBEND	-58.18	-8.35	10.81	155.49	0.000	0.000	36.85	0.00	0.00	0.00	0.00	0.00
38	SAGBEND	-64.12	-9.48	10.79	161.54	0.000	0.000	36.85	0.00	0.00	0.00	0.00	0.00
39	SAGBEND	-70.06	-10.61	10.76	167.59	0.000	0.000	36.85	0.00	0.00	0.00	0.00	0.00
40	SAGBEND	-76.01	-11.74	10.74	173.64	0.000	0.000	36.84	0.00	0.00	0.00	0.00	0.00
41	SAGBEND	-81.95	-12.87	10.72	179.69	0.000	0.000	36.84	0.00	0.00	0.00	0.00	0.00
42	SAGBEND	-87.90	-13.99	10.69	185.74	0.000	0.000	36.84	0.00	0.00	0.00	0.00	0.00
43	SAGBEND	-93.84	-15.11	10.67	191.79	0.000	0.000	36.84	0.00	0.00	0.00	0.00	0.00
44	SAGBEND	-99.79	-16.23	10.64	197.84	0.000	0.000	36.83	0.00	0.00	0.00	0.00	0.00
45	SAGBEND	-105.73	-17.35	10.62	203.89	0.000	0.000	36.83	0.00	0.00	0.00	0.00	0.00
46	SAGBEND	-111.68	-18.46	10.59	209.94	0.000	0.000	36.83	0.00	0.00	0.00	0.00	0.00
47	SAGBEND	-117.63	-19.57	10.57	215.99	0.000	0.000	36.82	0.00	0.00	0.00	0.00	0.00
48	SAGBEND	-123.57	-20.68	10.55	222.04	0.000	0.000	36.82	0.00	0.00	0.00	0.00	0.00
49	SAGBEND	-129.52	-21.79	10.52	228.09	0.000	0.000	36.82	0.00	0.00	0.00	0.00	0.00
50	SAGBEND	-135.47	-22.89	10.50	234.14	0.000	0.000	36.81	0.00	0.00	0.00	0.00	0.00
51	SAGBEND	-141.42	-23.99	10.47	240.19	0.000	0.000	36.81	0.00	0.00	0.00	0.00	0.00
52	SAGBEND	-147.37	-25.09	10.45	246.24	0.000	0.000	36.81	0.00	0.00	0.00	0.00	0.00
53	SAGBEND	-153.32	-26.18	10.42	252.29	0.000	0.000	36.81	0.00	0.00	0.00	0.00	0.00
54	SAGBEND	-159.27	-27.28	10.40	258.34	0.000	0.000	36.80	0.00	0.00	0.00	0.00	0.00
55	SAGBEND	-165.22	-28.37	10.38	264.39	0.000	0.000	36.80	0.00	0.00	0.00	0.00	0.00
56	SAGBEND	-171.17	-29.46	10.35	270.44	0.000	0.000	36.80	0.00	0.00	0.00	0.00	0.00
57	SAGBEND	-177.12	-30.54	10.33	276.49	0.000	0.000	36.79	0.00	0.00	0.00	0.00	0.00
58	SAGBEND	-183.07	-31.63	10.30	282.54	0.000	0.000	36.79	0.00	0.00	0.00	0.00	0.00
59	SAGBEND	-189.03	-32.71	10.28	288.59	0.000	0.000	36.79	0.00	0.00	0.00	0.00	0.00
60	SAGBEND	-194.98	-33.79	10.26	294.64	0.000	0.000	36.79	0.00	0.00	0.00	0.00	0.00

S T A T I C P I P E C O O R D I N A T E S, F O R C E S A N D S T R E S S E S

NODE NO.	PIPE SECTION	X COORD (M)	Y COORD (M)	VERT ANGLE (DEG)	PIPE LENGTH (M)	SUPPORT REACTION (KN)	SEPARA -TION (M)	AXIAL TENSION (KN)	BENDING MOMENT (KN-M)	TENSILE STRESS (MPA)	BENDING STRESS (MPA)	TOTAL STRESS (MPA)	PERCNT YIELD (PCT)
61	SAGBEND	-200.93	-34.86	10.23	300.69	0.000	0.000	36.78	0.00	0.00	0.00	0.00	0.00
62	SAGBEND	-206.89	-35.93	10.21	306.74	0.000	0.000	36.78	0.00	0.00	0.00	0.00	0.00
63	SAGBEND	-210.22	-36.53	10.19	310.12	0.000	0.000	36.78	0.00	0.00	0.00	0.00	0.00
64	SAGBEND	-214.51	-37.28	9.56	314.48	0.000	0.000	36.71	0.00	0.00	0.00	0.00	0.00
65	SAGBEND	-218.81	-37.98	8.92	318.84	0.000	0.000	36.64	0.00	0.00	0.00	0.00	0.00
66	SAGBEND	-224.80	-38.87	8.04	324.89	0.000	0.000	36.56	0.00	0.00	0.00	0.00	0.00
67	SAGBEND	-230.79	-39.67	7.15	330.94	0.000	0.000	36.48	0.00	0.00	0.00	0.00	0.00
68	SAGBEND	-236.80	-40.38	6.26	336.99	0.000	0.000	36.42	0.00	0.00	0.00	0.00	0.00
69	SAGBEND	-242.82	-40.99	5.36	343.04	0.000	0.000	36.36	0.00	0.00	0.00	0.00	0.00
70	SAGBEND	-248.85	-41.51	4.46	349.09	0.000	0.000	36.31	0.00	0.00	0.00	0.00	0.00
71	SAGBEND	-254.88	-41.93	3.56	355.14	0.000	0.000	36.27	0.00	0.00	0.00	0.00	0.00
72	SAGBEND	-260.93	-42.26	2.66	361.19	0.000	0.000	36.24	0.00	0.00	0.00	0.00	0.00
73	SAGBEND	-266.97	-42.49	1.75	367.24	0.000	0.000	36.22	0.00	0.00	0.00	0.00	0.00
74	SAGBEND	-273.02	-42.63	0.86	373.29	0.002	0.000	36.20	0.00	0.00	0.00	0.00	0.00
75	SEABED	-279.07	-42.67	0.02	379.34	0.326	0.000	36.20	-0.01	0.00	0.00	0.00	0.00
76	SEABED	-285.12	-42.67	0.00	385.39	0.568	0.000	36.20	0.00	0.00	0.00	0.00	0.00
77	SEABED	-291.17	-42.67	0.00	391.44	0.572	0.000	36.20	0.00	0.00	0.00	0.00	0.00
78	SEABED	-297.22	-42.67	0.00	397.49	0.572	0.000	36.20	0.00	0.00	0.00	0.00	0.00
79	SEABED	-303.27	-42.67	0.00	403.54	0.572	0.000	36.20	0.00	0.00	0.00	0.00	0.00
80	SEABED	-309.32	-42.67	0.00	409.59	0.572	0.000	36.20	0.00	0.00	0.00	0.00	0.00
81	SEABED	-315.37	-42.67	0.00	415.64	0.572	0.000	36.20	0.00	0.00	0.00	0.00	0.00
82	SEABED	-321.42	-42.67	0.00	421.69	0.572	0.000	36.20	0.00	0.00	0.00	0.00	0.00
83	SEABED	-327.47	-42.67	0.00	427.74	0.572	0.000	36.20	0.00	0.00	0.00	0.00	0.00
84	SEABED	-333.52	-42.67	0.00	433.79	0.572	0.000	36.20	0.00	0.00	0.00	0.00	0.00
85	SEABED	-339.57	-42.67	0.00	439.84	0.572	0.000	36.20	0.00	0.00	0.00	0.00	0.00
86	SEABED	-345.62	-42.67	0.00	445.89	0.572	0.000	36.20	0.00	0.00	0.00	0.00	0.00
87	SEABED	-351.67	-42.67	0.00	451.94	0.572	0.000	36.20	0.00	0.00	0.00	0.00	0.00
88	SEABED	-357.72	-42.67	0.00	457.99	0.572	0.000	36.20	0.00	0.00	0.00	0.00	0.00
89	SEABED	-363.77	-42.67	0.00	464.04	0.572	0.000	36.20	0.00	0.00	0.00	0.00	0.00
90	SEABED	-369.82	-42.67	0.00	470.09	0.572	0.000	36.20	0.00	0.00	0.00	0.00	0.00
91	SEABED	-375.87	-42.67	0.00	476.14	0.572	0.000	36.20	0.00	0.00	0.00	0.00	0.00
92	SEABED	-381.92	-42.67	0.00	482.19	0.572	0.000	36.20	0.00	0.00	0.00	0.00	0.00
93	SEABED	-387.97	-42.67	0.00	488.24	0.572	0.000	36.20	0.00	0.00	0.00	0.00	0.00
94	SEABED	-394.02	-42.67	0.00	494.29	0.572	0.000	36.20	0.00	0.00	0.00	0.00	0.00
95	SEABED	-400.07	-42.67	0.00	500.34	0.572	0.000	36.20	0.00	0.00	0.00	0.00	0.00
96	SEABED	-406.12	-42.67	0.00	506.39	0.572	0.000	36.20	0.00	0.00	0.00	0.00	0.00
97	SEABED	-412.17	-42.67	0.00	512.44	0.572	0.000	36.20	0.00	0.00	0.00	0.00	0.00
98	SEABED	-418.22	-42.67	0.00	518.49	0.572	0.000	36.20	0.00	0.00	0.00	0.00	0.00
99	SEABED	-424.27	-42.67	0.00	524.54	0.572	0.000	36.20	0.00	0.00	0.00	0.00	0.00
100	SEABED	-430.32	-42.67	0.00	530.59	0.572	0.000	36.20	0.00	0.00	0.00	0.00	0.00
101	SEABED	-436.37	-42.67	0.00	536.64	0.572	0.000	36.20	0.00	0.00	0.00	0.00	0.00
102	SEABED	-442.42	-42.67	0.00	542.69	0.572	0.000	36.20	0.00	0.00	0.00	0.00	0.00
103	SEABED	-448.47	-42.67	0.00	548.74	0.572	0.000	36.20	0.00	0.00	0.00	0.00	0.00
104	SEABED	-454.52	-42.67	0.00	554.79	0.572	0.000	36.20	0.00	0.00	0.00	0.00	0.00

S T A T I C P I P E C O O R D I N A T E S, F O R C E S A N D S T R E S S E S

NODE NO.	PIPE SECTION	X COORD (M)	Y COORD (M)	VERT ANGLE (DEG)	PIPE LENGTH (M)	SUPPORT REACTION (KN)	SEPARA -TION (M)	AXIAL TENSION (KN)	BENDING MOMENT (KN-M)	TENSILE STRESS (MPA)	BENDING STRESS (MPA)	TOTAL STRESS (MPA)	PERCNT YIELD (PCT)
105	SEABED	-460.57	-42.67	0.00	560.84	0.572	0.000	36.20	0.00	0.00	0.00	0.00	0.00
106	SEABED	-466.62	-42.67	0.00	566.89	0.572	0.000	36.20	0.00	0.00	0.00	0.00	0.00
107	SEABED	-472.67	-42.67	0.00	572.94	0.572	0.000	36.20	0.00	0.00	0.00	0.00	0.00
108	SEABED	-478.72	-42.67	0.00	578.99	0.572	0.000	36.20	0.00	0.00	0.00	0.00	0.00
109	SEABED	-484.77	-42.67	0.00	585.04	0.572	0.000	36.20	0.00	0.00	0.00	0.00	0.00
110	SEABED	-490.82	-42.67	0.00	591.09	0.572	0.000	36.20	0.00	0.00	0.00	0.00	0.00
111	SEABED	-496.87	-42.67	0.00	597.14	0.572	0.000	36.20	0.00	0.00	0.00	0.00	0.00
112	SEABED	-502.92	-42.67	0.00	603.19	0.572	0.000	36.20	0.00	0.00	0.00	0.00	0.00
113	SEABED	-508.97	-42.67	0.00	609.24	0.572	0.000	36.20	0.00	0.00	0.00	0.00	0.00
114	SEABED	-515.02	-42.67	0.00	615.29	0.572	0.000	36.20	0.00	0.00	0.00	0.00	0.00
115	SEABED	-521.07	-42.67	0.00	621.34	0.572	0.000	36.20	0.00	0.00	0.00	0.00	0.00
116	SEABED	-527.12	-42.67	0.00	627.39	0.572	0.000	36.20	0.00	0.00	0.00	0.00	0.00
117	SEABED	-533.17	-42.67	0.00	633.44	0.572	0.000	36.20	0.00	0.00	0.00	0.00	0.00
118	SEABED	-539.22	-42.67	0.00	639.49	0.572	0.000	36.20	0.00	0.00	0.00	0.00	0.00
119	SEABED	-545.27	-42.67	0.00	645.54	0.572	0.000	36.20	0.00	0.00	0.00	0.00	0.00
120	SEABED	-551.32	-42.67	0.00	651.59	0.572	0.000	36.20	0.00	0.00	0.00	0.00	0.00
121	SEABED	-557.37	-42.67	0.00	657.64	0.572	0.000	36.20	0.00	0.00	0.00	0.00	0.00
122	SEABED	-563.42	-42.67	0.00	663.69	0.572	0.000	36.20	0.00	0.00	0.00	0.00	0.00
123	SEABED	-569.47	-42.67	0.00	669.74	0.572	0.000	36.20	0.00	0.00	0.00	0.00	0.00
124	SEABED	-575.52	-42.67	0.00	675.79	0.572	0.000	36.20	0.00	0.00	0.00	0.00	0.00
125	SEABED	-581.57	-42.67	0.00	681.84	0.572	0.000	36.20	0.00	0.00	0.00	0.00	0.00
126	SEABED	-587.62	-42.67	0.00	687.89	0.572	0.000	36.20	0.00	0.00	0.00	0.00	0.00
127	SEABED	-593.67	-42.67	0.00	693.94	0.572	0.000	36.20	0.00	0.00	0.00	0.00	0.00
128	SEABED	-599.72	-42.67	0.00	699.99	0.572	0.000	36.20	0.00	0.00	0.00	0.00	0.00
129	SEABED	-605.77	-42.67	-0.01	706.04	0.455	0.000	36.20	0.00	0.00	0.00	0.00	0.00
130	SEABED	-609.85	-42.67	-0.15	710.12	0.000	0.000	36.20	0.00	0.00	0.00	0.00	0.00

S T A T I C P I P E C O O R D I N A T E S, F O R C E S A N D S T R E S S E S

NODE NO.	PIPE SECTION	X COORD (M)	Y COORD (M)	VERT ANGLE (DEG)	PIPE LENGTH (M)	SUPPORT REACTION (KN)	SEPARA -TION (M)	AXIAL TENSION (KN)	BENDING MOMENT (KN-M)	TENSILE STRESS (MPA)	BENDING STRESS (MPA)	TOTAL STRESS (MPA)	PERCNT YIELD (PCT)
1	LAYBARGE	96.31	6.41	1.93	0.00	9.943	0.000	0.00	2.75	0.00	4.25	4.25	1.18
3	LAYBARGE	84.28	6.05	1.58	12.04	24.068	0.000	-0.73	-19.09	-0.07	-29.55	29.62	8.23
5	LAYBARGE	73.45	5.73	1.90	22.87	24.654	0.000	-1.39	-29.95	-0.13	-46.37	46.51	12.92
7	TENSIONR	60.11	5.24	2.28	36.23	30.931	0.000	48.22	-22.09	4.64	-34.20	38.84	10.79
9	LAYBARGE	51.10	4.87	2.20	45.24	0.000	0.000	47.50	25.17	4.57	38.96	43.54	12.09
10	LAYBARGE	46.45	4.70	2.02	49.89	16.487	0.000	47.18	3.33	4.54	5.16	9.70	2.70
12	LAYBARGE	35.36	4.31	2.24	60.99	19.445	0.000	46.33	-41.27	4.46	-63.89	68.35	18.99
14	LAYBARGE	23.34	3.62	4.95	73.04	40.377	0.000	44.34	-161.61	4.27	-250.20	254.47	70.69
16	LAYBARGE	19.27	3.21	6.46	77.13	0.000	0.000	43.86	-121.28	4.22	-187.76	191.98	53.33
17	LAYBARGE	8.90	1.76	9.68	87.60	41.216	0.000	40.70	-147.71	3.92	-228.68	232.60	64.61
19	LAYBARGE	4.92	1.03	10.84	91.64	0.000	0.000	39.70	-72.23	3.82	-111.83	115.65	32.12
20	LAYBARGE	3.10	0.68	11.12	93.49	0.000	0.061	39.06	-43.97	3.76	-68.08	71.84	19.95

24	STINGER	-7.56	-1.44	11.05	104.37	0.000	0.039	36.29	23.37	3.41	36.18	39.67	11.02
26	STINGER	-16.54	-3.16	10.89	113.51	16.867	0.000	34.56	-23.25	3.15	-35.99	39.32	10.92
29	STINGER	-26.14	-5.03	10.99	123.29	1.912	0.000	32.71	0.00	2.86	0.00	3.17	0.88
31	STINGER	-36.90	-6.95	10.10	134.22	0.000	0.250	32.71	0.00	0.00	0.00	0.00	0.00
33	STINGER	-39.88	-7.48	10.07	137.25	0.000	0.771	32.71	0.00	0.00	0.00	0.00	0.00
35	SAGBEND	-45.93	-8.55	10.05	143.39	0.000	0.000	32.71	0.00	0.00	0.00	0.00	0.00
36	SAGBEND	-51.89	-9.61	10.02	149.44	0.000	0.000	32.70	0.00	0.00	0.00	0.00	0.00
37	SAGBEND	-57.85	-10.66	10.00	155.49	0.000	0.000	32.70	0.00	0.00	0.00	0.00	0.00
38	SAGBEND	-63.81	-11.71	9.97	161.54	0.000	0.000	32.70	0.00	0.00	0.00	0.00	0.00
39	SAGBEND	-69.76	-12.75	9.94	167.59	0.000	0.000	32.70	0.00	0.00	0.00	0.00	0.00
40	SAGBEND	-75.72	-13.80	9.91	173.64	0.000	0.000	32.69	0.00	0.00	0.00	0.00	0.00
41	SAGBEND	-81.68	-14.84	9.89	179.69	0.000	0.000	32.69	0.00	0.00	0.00	0.00	0.00
42	SAGBEND	-87.64	-15.87	9.86	185.74	0.000	0.000	32.69	0.00	0.00	0.00	0.00	0.00
43	SAGBEND	-93.60	-16.91	9.83	191.79	0.000	0.000	32.69	0.00	0.00	0.00	0.00	0.00
44	SAGBEND	-99.57	-17.94	9.81	197.84	0.000	0.000	32.68	0.00	0.00	0.00	0.00	0.00
45	SAGBEND	-105.53	-18.97	9.78	203.89	0.000	0.000	32.68	0.00	0.00	0.00	0.00	0.00
46	SAGBEND	-111.49	-20.00	9.75	209.94	0.000	0.000	32.68	0.00	0.00	0.00	0.00	0.00
47	SAGBEND	-117.45	-21.02	9.72	215.99	0.000	0.000	32.67	0.00	0.00	0.00	0.00	0.00
48	SAGBEND	-123.42	-22.04	9.70	222.04	0.000	0.000	32.67	0.00	0.00	0.00	0.00	0.00
49	SAGBEND	-129.38	-23.06	9.67	228.09	0.000	0.000	32.67	0.00	0.00	0.00	0.00	0.00
50	SAGBEND	-135.34	-24.07	9.64	234.14	0.000	0.000	32.67	0.00	0.00	0.00	0.00	0.00
51	SAGBEND	-141.31	-25.08	9.61	240.19	0.000	0.000	32.66	0.00	0.00	0.00	0.00	0.00
52	SAGBEND	-147.27	-26.09	9.59	246.24	0.000	0.000	32.66	0.00	0.00	0.00	0.00	0.00
53	SAGBEND	-153.24	-27.10	9.56	252.29	0.000	0.000	32.66	0.00	0.00	0.00	0.00	0.00
54	SAGBEND	-159.20	-28.10	9.53	258.34	0.000	0.000	32.66	0.00	0.00	0.00	0.00	0.00
55	SAGBEND	-165.17	-29.10	9.50	264.39	0.000	0.000	32.65	0.00	0.00	0.00	0.00	0.00
56	SAGBEND	-171.14	-30.10	9.48	270.44	0.000	0.000	32.65	0.00	0.00	0.00	0.00	0.00
57	SAGBEND	-177.11	-31.09	9.45	276.49	0.000	0.000	32.65	0.00	0.00	0.00	0.00	0.00
58	SAGBEND	-183.07	-32.09	9.42	282.54	0.000	0.000	32.65	0.00	0.00	0.00	0.00	0.00
59	SAGBEND	-189.04	-33.07	9.40	288.59	0.000	0.000	32.64	0.00	0.00	0.00	0.00	0.00
60	SAGBEND	-195.01	-34.06	9.37	294.64	0.000	0.000	32.64	0.00	0.00	0.00	0.00	0.00

S T A T I C P I P E C O O R D I N A T E S, F O R C E S A N D S T R E S S E S

NODE NO.	PIPE SECTION	X COORD (M)	Y COORD (M)	VERT ANGLE (DEG)	PIPE LENGTH (M)	SUPPORT REACTION (KN)	SEPARA -TION (M)	AXIAL TENSION (KN)	BENDING MOMENT (KN-M)	TENSILE STRESS (MPA)	BENDING STRESS (MPA)	TOTAL STRESS (MPA)	PERCNT YIELD (PCT)
61	SAGBEND	-200.98	-35.04	9.34	300.69	0.000	0.000	32.64	0.00	0.00	0.00	0.00	0.00
62	SAGBEND	-206.95	-36.02	9.31	306.74	0.000	0.000	32.64	0.00	0.00	0.00	0.00	0.00
63	SAGBEND	-212.92	-37.00	9.29	312.79	0.000	0.000	32.63	0.00	0.00	0.00	0.00	0.00
64	SAGBEND	-216.54	-37.59	9.27	316.45	0.000	0.000	32.63	0.00	0.00	0.00	0.00	0.00
65	SAGBEND	-220.16	-38.18	9.25	320.12	0.000	0.000	32.63	0.00	0.00	0.00	0.00	0.00
66	SAGBEND	-224.87	-38.92	8.47	324.89	0.000	0.000	32.56	0.00	0.00	0.00	0.00	0.00
67	SAGBEND	-230.86	-39.76	7.47	330.94	0.000	0.000	32.48	0.00	0.00	0.00	0.00	0.00
68	SAGBEND	-236.86	-40.49	6.47	336.99	0.000	0.000	32.41	0.00	0.00	0.00	0.00	0.00
69	SAGBEND	-242.88	-41.12	5.46	343.04	0.000	0.000	32.35	0.00	0.00	0.00	0.00	0.00
70	SAGBEND	-248.91	-41.64	4.45	349.09	0.000	0.000	32.30	0.00	0.00	0.00	0.00	0.00
71	SAGBEND	-254.94	-42.06	3.44	355.14	0.000	0.000	32.26	0.00	0.00	0.00	0.00	0.00
72	SAGBEND	-260.99	-42.37	2.42	361.18	0.000	0.000	32.23	0.00	0.00	0.00	0.00	0.00
73	SAGBEND	-267.03	-42.57	1.40	367.23	0.000	0.000	32.22	0.00	0.00	0.00	0.00	0.00
74	SAGBEND	-273.08	-42.66	0.37	373.28	0.107	0.000	32.21	0.01	0.00	0.00	0.00	0.00
75	SEABED	-279.13	-42.67	0.02	379.33	0.533	0.000	32.21	0.01	0.00	0.00	0.00	0.00
76	SEABED	-285.18	-42.67	0.00	385.38	0.572	0.000	32.21	0.00	0.00	0.00	0.00	0.00
77	SEABED	-291.23	-42.67	0.00	391.43	0.572	0.000	32.21	0.00	0.00	0.00	0.00	0.00
78	SEABED	-297.28	-42.67	0.00	397.48	0.572	0.000	32.21	0.00	0.00	0.00	0.00	0.00
79	SEABED	-303.33	-42.67	0.00	403.53	0.572	0.000	32.21	0.00	0.00	0.00	0.00	0.00
80	SEABED	-309.38	-42.67	0.00	409.58	0.572	0.000	32.21	0.00	0.00	0.00	0.00	0.00
81	SEABED	-315.43	-42.67	0.00	415.63	0.572	0.000	32.21	0.00	0.00	0.00	0.00	0.00
82	SEABED	-321.48	-42.67	0.00	421.68	0.572	0.000	32.21	0.00	0.00	0.00	0.00	0.00
83	SEABED	-327.53	-42.67	0.00	427.73	0.572	0.000	32.21	0.00	0.00	0.00	0.00	0.00
84	SEABED	-333.58	-42.67	0.00	433.78	0.572	0.000	32.21	0.00	0.00	0.00	0.00	0.00
85	SEABED	-339.63	-42.67	0.00	439.83	0.572	0.000	32.21	0.00	0.00	0.00	0.00	0.00
86	SEABED	-345.68	-42.67	0.00	445.88	0.572	0.000	32.21	0.00	0.00	0.00	0.00	0.00
87	SEABED	-351.73	-42.67	0.00	451.93	0.572	0.000	32.21	0.00	0.00	0.00	0.00	0.00
88	SEABED	-357.78	-42.67	0.00	457.98	0.572	0.000	32.21	0.00	0.00	0.00	0.00	0.00
89	SEABED	-363.83	-42.67	0.00	464.03	0.572	0.000	32.21	0.00	0.00	0.00	0.00	0.00
90	SEABED	-369.88	-42.67	0.00	470.08	0.572	0.000	32.21	0.00	0.00	0.00	0.00	0.00
91	SEABED	-375.93	-42.67	0.00	476.13	0.572	0.000	32.21	0.00	0.00	0.00	0.00	0.00
92	SEABED	-381.98	-42.67	0.00	482.18	0.572	0.000	32.21	0.00	0.00	0.00	0.00	0.00
93	SEABED	-388.03	-42.67	0.00	488.23	0.572	0.000	32.21	0.00	0.00	0.00	0.00	0.00
94	SEABED	-394.08	-42.67	0.00	494.28	0.572	0.000	32.21	0.00	0.00	0.00	0.00	0.00
95	SEABED	-400.13	-42.67	0.00	500.33	0.572	0.000	32.21	0.00	0.00	0.00	0.00	0.00
96	SEABED	-406.18	-42.67	0.00	506.38	0.572	0.000	32.21	0.00	0.00	0.00	0.00	0.00
97	SEABED	-412.23	-42.67	0.00	512.43	0.572	0.000	32.21	0.00	0.00	0.00	0.00	0.00
98	SEABED	-418.28	-42.67	0.00	518.48	0.572	0.000	32.21	0.00	0.00	0.00	0.00	0.00
99	SEABED	-424.33	-42.67	0.00	524.53	0.572	0.000	32.21	0.00	0.00	0.00	0.00	0.00
100	SEABED	-430.38	-42.67	0.00	530.58	0.572	0.000	32.21	0.00	0.00	0.00	0.00	0.00
101	SEABED	-436.43	-42.67	0.00	536.63	0.572	0.000	32.21	0.00	0.00	0.00	0.00	0.00
102	SEABED	-442.48	-42.67	0.00	542.68	0.572	0.000	32.21	0.00	0.00	0.00	0.00	0.00
103	SEABED	-448.53	-42.67	0.00	548.73	0.572	0.000	32.21	0.00	0.00	0.00	0.00	0.00
104	SEABED	-454.58	-42.67	0.00	554.78	0.572	0.000	32.21	0.00	0.00	0.00	0.00	0.00

S T A T I C P I P E C O O R D I N A T E S, F O R C E S A N D S T R E S S E S

NODE NO.	PIPE SECTION	X COORD (M)	Y COORD (M)	VERT ANGLE (DEG)	PIPE LENGTH (M)	SUPPORT REACTION (KN)	SEPARA -TION (M)	AXIAL TENSION (KN)	BENDING MOMENT (KN-M)	TENSILE STRESS (MPA)	BENDING STRESS (MPA)	TOTAL STRESS (MPA)	PERCNT YIELD (PCT)
105	SEABED	-460.63	-42.67	0.00	560.83	0.572	0.000	32.21	0.00	0.00	0.00	0.00	0.00
106	SEABED	-466.68	-42.67	0.00	566.88	0.572	0.000	32.21	0.00	0.00	0.00	0.00	0.00
107	SEABED	-472.73	-42.67	0.00	572.93	0.572	0.000	32.21	0.00	0.00	0.00	0.00	0.00
108	SEABED	-478.78	-42.67	0.00	578.98	0.572	0.000	32.21	0.00	0.00	0.00	0.00	0.00
109	SEABED	-484.83	-42.67	0.00	585.03	0.572	0.000	32.21	0.00	0.00	0.00	0.00	0.00
110	SEABED	-490.88	-42.67	0.00	591.08	0.572	0.000	32.21	0.00	0.00	0.00	0.00	0.00
111	SEABED	-496.92	-42.67	0.00	597.13	0.572	0.000	32.21	0.00	0.00	0.00	0.00	0.00
112	SEABED	-502.97	-42.67	0.00	603.18	0.572	0.000	32.21	0.00	0.00	0.00	0.00	0.00
113	SEABED	-509.02	-42.67	0.00	609.23	0.572	0.000	32.21	0.00	0.00	0.00	0.00	0.00
114	SEABED	-515.07	-42.67	0.00	615.28	0.572	0.000	32.21	0.00	0.00	0.00	0.00	0.00
115	SEABED	-521.12	-42.67	0.00	621.33	0.572	0.000	32.21	0.00	0.00	0.00	0.00	0.00
116	SEABED	-527.17	-42.67	0.00	627.38	0.572	0.000	32.21	0.00	0.00	0.00	0.00	0.00
117	SEABED	-533.22	-42.67	0.00	633.43	0.572	0.000	32.21	0.00	0.00	0.00	0.00	0.00
118	SEABED	-539.27	-42.67	0.00	639.48	0.572	0.000	32.21	0.00	0.00	0.00	0.00	0.00
119	SEABED	-545.32	-42.67	0.00	645.53	0.572	0.000	32.21	0.00	0.00	0.00	0.00	0.00
120	SEABED	-551.37	-42.67	0.00	651.58	0.572	0.000	32.21	0.00	0.00	0.00	0.00	0.00
121	SEABED	-557.42	-42.67	0.00	657.63	0.572	0.000	32.21	0.00	0.00	0.00	0.00	0.00
122	SEABED	-563.47	-42.67	0.00	663.68	0.572	0.000	32.21	0.00	0.00	0.00	0.00	0.00
123	SEABED	-569.52	-42.67	0.00	669.73	0.572	0.000	32.21	0.00	0.00	0.00	0.00	0.00
124	SEABED	-575.57	-42.67	0.00	675.78	0.572	0.000	32.21	0.00	0.00	0.00	0.00	0.00
125	SEABED	-581.62	-42.67	0.00	681.83	0.572	0.000	32.21	0.00	0.00	0.00	0.00	0.00
126	SEABED	-587.67	-42.67	0.00	687.88	0.572	0.000	32.21	0.00	0.00	0.00	0.00	0.00
127	SEABED	-593.72	-42.67	0.00	693.93	0.572	0.000	32.21	0.00	0.00	0.00	0.00	0.00
128	SEABED	-599.77	-42.67	0.00	699.98	0.572	0.000	32.21	0.00	0.00	0.00	0.00	0.00
129	SEABED	-605.82	-42.67	0.00	706.03	0.572	0.000	32.21	0.00	0.00	0.00	0.00	0.00
130	SEABED	-611.87	-42.67	0.00	712.08	0.475	0.000	32.21	0.00	0.00	0.00	0.00	0.00
131	SEABED	-615.89	-42.67	-0.01	716.09	0.358	0.000	32.21	0.00	0.00	0.00	0.00	0.00
132	SEABED	-619.90	-42.67	-0.16	720.11	0.000	0.000	32.21	0.00	0.00	0.00	0.00	0.00

S T A T I C P I P E C O O R D I N A T E S, F O R C E S A N D S T R E S S E S

NODE NO.	PIPE SECTION	X COORD (M)	Y COORD (M)	VERT ANGLE (DEG)	PIPE LENGTH (M)	SUPPORT REACTION (KN)	SEPARA -TION (M)	AXIAL TENSION (KN)	BENDING MOMENT (KN-M)	TENSILE STRESS (MPA)	BENDING STRESS (MPA)	TOTAL STRESS (MPA)	PERCNT YIELD (PCT)
1	LAYBARGE	96.31	6.41	1.93	0.00	9.944	0.000	0.00	2.75	0.00	4.25	4.25	1.18
3	LAYBARGE	84.28	6.05	1.58	12.04	24.064	0.000	-0.73	-19.08	-0.07	-29.54	29.61	8.22
5	LAYBARGE	73.45	5.73	1.90	22.87	24.667	0.000	-1.39	-29.98	-0.13	-46.41	46.55	12.93
7	TENSIONR	60.11	5.24	2.28	36.23	30.909	0.000	61.92	-22.01	5.96	-34.07	40.03	11.12
9	LAYBARGE	51.10	4.87	2.20	45.24	0.000	0.000	61.20	24.96	5.89	38.63	44.53	12.37
10	LAYBARGE	46.45	4.70	2.02	49.89	16.487	0.000	60.88	3.27	5.86	5.07	10.93	3.04
12	LAYBARGE	35.36	4.31	2.23	60.99	19.309	0.000	60.03	-40.82	5.78	-63.20	68.98	19.16
14	LAYBARGE	23.34	3.62	4.98	73.04	42.681	0.000	58.01	-165.14	5.59	-255.66	261.25	72.57
16	LAYBARGE	19.27	3.21	6.50	77.13	0.000	0.000	57.56	-120.19	5.54	-186.07	191.61	53.22
17	LAYBARGE	8.90	1.76	9.56	87.60	40.632	0.000	54.47	-138.33	5.24	-214.15	219.40	60.94
19	LAYBARGE	4.92	1.05	10.64	91.64	0.000	0.000	53.45	-63.51	5.15	-98.32	103.47	28.74
20	LAYBARGE	3.10	0.70	10.87	93.49	0.000	0.079	52.81	-35.81	5.09	-55.43	60.52	16.81
24	STINGER	-7.58	-1.36	10.63	104.37	0.000	0.064	50.06	27.55	4.74	42.65	47.47	13.18
26	STINGER	-16.58	-3.01	10.41	113.51	17.028	0.000	48.42	-21.82	4.49	-33.78	38.43	10.68
29	STINGER	-26.19	-4.79	10.48	123.29	1.835	0.000	46.65	0.00	4.22	0.00	4.50	1.25
31	STINGER	-36.96	-6.61	9.59	134.22	0.000	0.274	46.65	0.00	0.00	0.00	0.00	0.00
33	STINGER	-39.95	-7.12	9.57	137.25	0.000	0.800	46.65	0.00	0.00	0.00	0.00	0.00
35	SAGBEND	-46.01	-8.14	9.55	143.39	0.000	0.000	46.65	0.00	0.00	0.00	0.00	0.00
36	SAGBEND	-51.97	-9.14	9.53	149.44	0.000	0.000	46.65	0.00	0.00	0.00	0.00	0.00
37	SAGBEND	-57.94	-10.14	9.52	155.49	0.000	0.000	46.64	0.00	0.00	0.00	0.00	0.00
38	SAGBEND	-63.91	-11.14	9.50	161.54	0.000	0.000	46.64	0.00	0.00	0.00	0.00	0.00
39	SAGBEND	-69.87	-12.14	9.48	167.59	0.000	0.000	46.64	0.00	0.00	0.00	0.00	0.00
40	SAGBEND	-75.84	-13.13	9.46	173.64	0.000	0.000	46.64	0.00	0.00	0.00	0.00	0.00

41	SAGBEND	-81.81	-14.13	9.44	179.69	0.000	0.000	46.63	0.00	0.00	0.00	0.00	0.00
42	SAGBEND	-87.78	-15.12	9.42	185.74	0.000	0.000	46.63	0.00	0.00	0.00	0.00	0.00
43	SAGBEND	-93.75	-16.11	9.40	191.79	0.000	0.000	46.63	0.00	0.00	0.00	0.00	0.00
44	SAGBEND	-99.72	-17.09	9.38	197.84	0.000	0.000	46.63	0.00	0.00	0.00	0.00	0.00
45	SAGBEND	-105.68	-18.08	9.36	203.89	0.000	0.000	46.62	0.00	0.00	0.00	0.00	0.00
46	SAGBEND	-111.65	-19.06	9.34	209.94	0.000	0.000	46.62	0.00	0.00	0.00	0.00	0.00
47	SAGBEND	-117.62	-20.04	9.32	215.99	0.000	0.000	46.62	0.00	0.00	0.00	0.00	0.00
48	SAGBEND	-123.59	-21.02	9.30	222.04	0.000	0.000	46.61	0.00	0.00	0.00	0.00	0.00
49	SAGBEND	-129.56	-22.00	9.29	228.09	0.000	0.000	46.61	0.00	0.00	0.00	0.00	0.00
50	SAGBEND	-135.54	-22.97	9.27	234.14	0.000	0.000	46.61	0.00	0.00	0.00	0.00	0.00
51	SAGBEND	-141.51	-23.95	9.25	240.19	0.000	0.000	46.61	0.00	0.00	0.00	0.00	0.00
52	SAGBEND	-147.48	-24.92	9.23	246.24	0.000	0.000	46.60	0.00	0.00	0.00	0.00	0.00
53	SAGBEND	-153.45	-25.89	9.21	252.29	0.000	0.000	46.60	0.00	0.00	0.00	0.00	0.00
54	SAGBEND	-159.42	-26.86	9.19	258.34	0.000	0.000	46.60	0.00	0.00	0.00	0.00	0.00
55	SAGBEND	-165.39	-27.82	9.17	264.39	0.000	0.000	46.60	0.00	0.00	0.00	0.00	0.00
56	SAGBEND	-171.37	-28.78	9.15	270.44	0.000	0.000	46.59	0.00	0.00	0.00	0.00	0.00
57	SAGBEND	-177.34	-29.74	9.13	276.49	0.000	0.000	46.59	0.00	0.00	0.00	0.00	0.00
58	SAGBEND	-183.31	-30.70	9.11	282.54	0.000	0.000	46.59	0.00	0.00	0.00	0.00	0.00
59	SAGBEND	-189.29	-31.66	9.09	288.59	0.000	0.000	46.59	0.00	0.00	0.00	0.00	0.00
60	SAGBEND	-195.26	-32.62	9.07	294.64	0.000	0.000	46.58	0.00	0.00	0.00	0.00	0.00

S T A T I C P I P E C O O R D I N A T E S, F O R C E S A N D S T R E S S E S

NODE NO.	PIPE SECTION	X COORD (M)	Y COORD (M)	VERT ANGLE (DEG)	PIPE LENGTH (M)	SUPPORT REACTION (KN)	SEPARA -TION (M)	AXIAL TENSION (KN)	BENDING MOMENT (KN-M)	TENSILE STRESS (MPA)	BENDING STRESS (MPA)	TOTAL STRESS (MPA)	PERCNT YIELD (PCT)
61	SAGBEND	-201.24	-33.57	9.06	300.69	0.000	0.000	46.58	0.00	0.00	0.00	0.00	0.00
62	SAGBEND	-207.21	-34.52	9.04	306.74	0.000	0.000	46.58	0.00	0.00	0.00	0.00	0.00
63	SAGBEND	-213.18	-35.47	9.02	312.79	0.000	0.000	46.58	0.00	0.00	0.00	0.00	0.00
64	SAGBEND	-216.81	-36.04	9.00	316.45	0.000	0.000	46.58	0.00	0.00	0.00	0.00	0.00
65	SAGBEND	-220.43	-36.62	8.99	320.12	0.000	0.000	46.57	0.00	0.00	0.00	0.00	0.00
66	SAGBEND	-225.14	-37.34	8.44	324.89	0.000	0.000	46.51	0.00	0.00	0.00	0.00	0.00
67	SAGBEND	-231.13	-38.19	7.75	330.94	0.000	0.000	46.43	0.00	0.00	0.00	0.00	0.00
68	SAGBEND	-237.13	-38.97	7.05	336.99	0.000	0.000	46.35	0.00	0.00	0.00	0.00	0.00
69	SAGBEND	-243.14	-39.68	6.34	343.04	0.000	0.000	46.28	0.00	0.00	0.00	0.00	0.00
70	SAGBEND	-249.15	-40.31	5.64	349.09	0.000	0.000	46.23	0.00	0.00	0.00	0.00	0.00
71	SAGBEND	-255.18	-40.86	4.93	355.14	0.000	0.000	46.17	0.00	0.00	0.00	0.00	0.00
72	SAGBEND	-261.21	-41.35	4.22	361.19	0.000	0.000	46.13	0.00	0.00	0.00	0.00	0.00
73	SAGBEND	-267.24	-41.76	3.51	367.24	0.000	0.000	46.09	0.00	0.00	0.00	0.00	0.00
74	SAGBEND	-273.28	-42.09	2.80	373.28	0.000	0.000	46.06	0.00	0.00	0.00	0.00	0.00
75	SAGBEND	-279.33	-42.35	2.09	379.33	0.000	0.000	46.03	0.00	0.00	0.00	0.00	0.00
76	SAGBEND	-285.38	-42.53	1.38	385.38	0.000	0.000	46.01	0.00	0.00	0.00	0.00	0.00
77	SAGBEND	-291.42	-42.64	0.68	391.43	0.003	0.000	46.00	-0.01	0.00	0.00	0.00	0.00
78	SEABED	-297.47	-42.67	0.02	397.48	0.325	0.000	46.00	-0.01	0.00	0.00	0.00	0.00
79	SEABED	-303.52	-42.67	0.00	403.53	0.566	0.000	46.00	0.00	0.00	0.00	0.00	0.00
80	SEABED	-309.57	-42.67	0.00	409.58	0.572	0.000	46.00	0.00	0.00	0.00	0.00	0.00
81	SEABED	-315.62	-42.67	0.00	415.63	0.572	0.000	46.00	0.00	0.00	0.00	0.00	0.00
82	SEABED	-321.67	-42.67	0.00	421.68	0.572	0.000	46.00	0.00	0.00	0.00	0.00	0.00
83	SEABED	-327.72	-42.67	0.00	427.73	0.572	0.000	46.00	0.00	0.00	0.00	0.00	0.00
84	SEABED	-333.77	-42.67	0.00	433.78	0.572	0.000	46.00	0.00	0.00	0.00	0.00	0.00
85	SEABED	-339.82	-42.67	0.00	439.83	0.572	0.000	46.00	0.00	0.00	0.00	0.00	0.00
86	SEABED	-345.87	-42.67	0.00	445.88	0.572	0.000	46.00	0.00	0.00	0.00	0.00	0.00
87	SEABED	-351.92	-42.67	0.00	451.93	0.572	0.000	46.00	0.00	0.00	0.00	0.00	0.00
88	SEABED	-357.97	-42.67	0.00	457.98	0.572	0.000	46.00	0.00	0.00	0.00	0.00	0.00
89	SEABED	-364.02	-42.67	0.00	464.03	0.572	0.000	46.00	0.00	0.00	0.00	0.00	0.00
90	SEABED	-370.07	-42.67	0.00	470.08	0.572	0.000	46.00	0.00	0.00	0.00	0.00	0.00
91	SEABED	-376.12	-42.67	0.00	476.13	0.572	0.000	46.00	0.00	0.00	0.00	0.00	0.00
92	SEABED	-382.17	-42.67	0.00	482.18	0.572	0.000	46.00	0.00	0.00	0.00	0.00	0.00
93	SEABED	-388.22	-42.67	0.00	488.23	0.572	0.000	46.00	0.00	0.00	0.00	0.00	0.00
94	SEABED	-394.27	-42.67	0.00	494.28	0.572	0.000	46.00	0.00	0.00	0.00	0.00	0.00
95	SEABED	-400.32	-42.67	0.00	500.33	0.572	0.000	46.00	0.00	0.00	0.00	0.00	0.00
96	SEABED	-406.37	-42.67	0.00	506.38	0.572	0.000	46.00	0.00	0.00	0.00	0.00	0.00
97	SEABED	-412.42	-42.67	0.00	512.43	0.572	0.000	46.00	0.00	0.00	0.00	0.00	0.00
98	SEABED	-418.47	-42.67	0.00	518.48	0.572	0.000	46.00	0.00	0.00	0.00	0.00	0.00
99	SEABED	-424.52	-42.67	0.00	524.53	0.572	0.000	46.00	0.00	0.00	0.00	0.00	0.00
100	SEABED	-430.57	-42.67	0.00	530.58	0.572	0.000	46.00	0.00	0.00	0.00	0.00	0.00
101	SEABED	-436.62	-42.67	0.00	536.63	0.572	0.000	46.00	0.00	0.00	0.00	0.00	0.00
102	SEABED	-442.67	-42.67	0.00	542.68	0.572	0.000	46.00	0.00	0.00	0.00	0.00	0.00
103	SEABED	-448.72	-42.67	0.00	548.73	0.572	0.000	46.00	0.00	0.00	0.00	0.00	0.00
104	SEABED	-454.77	-42.67	0.00	554.78	0.572	0.000	46.00	0.00	0.00	0.00	0.00	0.00

S T A T I C P I P E C O O R D I N A T E S, F O R C E S A N D S T R E S S E S

NODE NO.	PIPE SECTION	X COORD (M)	Y COORD (M)	VERT ANGLE (DEG)	PIPE LENGTH (M)	SUPPORT REACTION (KN)	SEPARA -TION (M)	AXIAL TENSION (KN)	BENDING MOMENT (KN-M)	TENSILE STRESS (MPA)	BENDING STRESS (MPA)	TOTAL STRESS (MPA)	PERCNT YIELD (PCT)
105	SEABED	-460.82	-42.67	0.00	560.83	0.572	0.000	46.00	0.00	0.00	0.00	0.00	0.00
106	SEABED	-466.87	-42.67	0.00	566.88	0.572	0.000	46.00	0.00	0.00	0.00	0.00	0.00
107	SEABED	-472.92	-42.67	0.00	572.93	0.572	0.000	46.00	0.00	0.00	0.00	0.00	0.00
108	SEABED	-478.97	-42.67	0.00	578.98	0.572	0.000	46.00	0.00	0.00	0.00	0.00	0.00
109	SEABED	-485.02	-42.67	0.00	585.03	0.572	0.000	46.00	0.00	0.00	0.00	0.00	0.00
110	SEABED	-491.07	-42.67	0.00	591.08	0.572	0.000	46.00	0.00	0.00	0.00	0.00	0.00
111	SEABED	-497.12	-42.67	0.00	597.13	0.572	0.000	46.00	0.00	0.00	0.00	0.00	0.00
112	SEABED	-503.17	-42.67	0.00	603.18	0.572	0.000	46.00	0.00	0.00	0.00	0.00	0.00
113	SEABED	-509.22	-42.67	0.00	609.23	0.572	0.000	46.00	0.00	0.00	0.00	0.00	0.00
114	SEABED	-515.27	-42.67	0.00	615.28	0.572	0.000	46.00	0.00	0.00	0.00	0.00	0.00
115	SEABED	-521.32	-42.67	0.00	621.33	0.572	0.000	46.00	0.00	0.00	0.00	0.00	0.00
116	SEABED	-527.37	-42.67	0.00	627.38	0.572	0.000	46.00	0.00	0.00	0.00	0.00	0.00
117	SEABED	-533.42	-42.67	0.00	633.43	0.572	0.000	46.00	0.00	0.00	0.00	0.00	0.00
118	SEABED	-539.47	-42.67	0.00	639.48	0.572	0.000	46.00	0.00	0.00	0.00	0.00	0.00
119	SEABED	-545.52	-42.67	0.00	645.53	0.572	0.000	46.00	0.00	0.00	0.00	0.00	0.00
120	SEABED	-551.57	-42.67	0.00	651.58	0.572	0.000	46.00	0.00	0.00	0.00	0.00	0.00
121	SEABED	-557.62	-42.67	0.00	657.63	0.572	0.000	46.00	0.00	0.00	0.00	0.00	0.00
122	SEABED	-563.67	-42.67	0.00	663.68	0.572	0.000	46.00	0.00	0.00	0.00	0.00	0.00
123	SEABED	-569.72	-42.67	0.00	669.73	0.572	0.000	46.00	0.00	0.00	0.00	0.00	0.00
124	SEABED	-575.77	-42.67	0.00	675.78	0.572	0.000	46.00	0.00	0.00	0.00	0.00	0.00
125	SEABED	-581.82	-42.67	0.00	681.83	0.572	0.000	46.00	0.00	0.00	0.00	0.00	0.00
126	SEABED	-587.87	-42.67	0.00	687.88	0.572	0.000	46.00	0.00	0.00	0.00	0.00	0.00
127	SEABED	-593.92	-42.67	0.00	693.93	0.572	0.000	46.00	0.00	0.00	0.00	0.00	0.00
128	SEABED	-599.97	-42.67	0.00	699.98	0.572	0.000	46.00	0.00	0.00	0.00	0.00	0.00
129	SEABED	-606.02	-42.67	0.00	706.03	0.572	0.000	46.00	0.00	0.00	0.00	0.00	0.00
130	SEABED	-612.07	-42.67	0.00	712.08	0.475	0.000	46.00	0.00	0.00	0.00	0.00	0.00
131	SEABED	-616.08	-42.67	-0.01	716.09	0.348	0.000	46.00	0.00	0.00	0.00	0.00	0.00
132	SEABED	-620.10	-42.67	-0.14	720.11	0.000	0.000	46.00	0.00	0.00	0.00	0.00	0.00

S T A T I C P I P E C O O R D I N A T E S, F O R C E S A N D S T R E S S E S

NODE NO.	PIPE SECTION	X COORD (M)	Y COORD (M)	VERT ANGLE (DEG)	PIPE LENGTH (M)	SUPPORT REACTION (KN)	SEPARA -TION (M)	AXIAL TENSION (KN)	BENDING MOMENT (KN-M)	TENSILE STRESS (MPA)	BENDING STRESS (MPA)	TOTAL STRESS (MPA)	PERCNT YIELD (PCT)
1	LAYBARGE	96.31	6.41	1.93	0.00	9.943	0.000	0.00	2.75	0.00	4.25	4.25	1.18
3	LAYBARGE	84.28	6.05	1.58	12.04	24.070	0.000	-0.73	-19.09	-0.07	-29.55	29.62	8.23
5	LAYBARGE	73.45	5.73	1.90	22.87	24.649	0.000	-1.39	-29.94	-0.13	-46.36	46.49	12.91
7	TENSIONR	60.11	5.24	2.28	36.23	30.971	0.000	61.92	-22.10	5.96	-34.22	40.18	11.16
9	LAYBARGE	51.10	4.87	2.20	45.24	0.000	0.000	61.20	25.25	5.89	39.09	44.99	12.50
10	LAYBARGE	46.45	4.70	2.01	49.89	16.182	0.000	60.88	3.73	5.86	5.78	11.64	3.23
12	LAYBARGE	35.36	4.31	2.25	60.99	20.458	0.000	60.03	-42.25	5.78	-65.42	71.20	19.78
14	LAYBARGE	23.34	3.62	4.90	73.04	39.140	0.000	58.08	-157.63	5.59	-244.04	249.63	69.34
16	LAYBARGE	19.26	3.22	6.39	77.13	0.000	0.000	57.56	-122.12	5.54	-189.06	194.61	54.06
17	LAYBARGE	8.90	1.76	9.88	87.60	27.968	0.000	54.25	-171.88	5.22	-266.10	271.32	75.37
19	LAYBARGE	4.93	1.01	11.59	91.64	0.000	0.000	52.90	-157.54	5.09	-243.90	248.99	69.16
20	LAYBARGE	3.12	0.62	12.34	93.49	17.344	0.000	52.11	-159.81	5.02	-247.42	252.43	70.12
24	STINGER	-7.54	-2.06	15.58	104.48	13.377	0.000	49.16	-99.05	4.62	-153.35	158.08	43.91
26	STINGER	-16.31	-4.64	17.09	113.63	9.408	0.000	46.75	-44.63	4.24	-69.09	73.58	20.44
29	STINGER	-25.67	-7.56	17.33	123.42	3.222	0.000	43.88	10.05	3.80	15.55	19.77	5.49
31	STINGER	-36.11	-10.78	16.93	134.35	0.000	0.218	40.67	0.00	3.30	0.00	4.02	1.12
33	STINGER	-38.98	-11.21	8.52	137.25	0.000	1.171	41.11	0.00	0.00	0.00	0.00	0.00
35	SAGBEND	-45.05	-12.12	8.50	143.40	0.000	0.000	41.11	0.00	0.00	0.00	0.00	0.00
36	SAGBEND	-51.03	-13.01	8.48	149.45	0.000	0.000	41.11	0.00	0.00	0.00	0.00	0.00
37	SAGBEND	-57.02	-13.90	8.46	155.50	0.000	0.000	41.10	0.00	0.00	0.00	0.00	0.00
38	SAGBEND	-63.00	-14.79	8.43	161.55	0.000	0.000	41.10	0.00	0.00	0.00	0.00	0.00
39	SAGBEND	-68.99	-15.68	8.41	167.59	0.000	0.000	41.10	0.00	0.00	0.00	0.00	0.00
40	SAGBEND	-74.97	-16.56	8.39	173.64	0.000	0.000	41.10	0.00	0.00	0.00	0.00	0.00
41	SAGBEND	-80.96	-17.44	8.37	179.69	0.000	0.000	41.10	0.00	0.00	0.00	0.00	0.00
42	SAGBEND	-86.94	-18.32	8.35	185.74	0.000	0.000	41.09	0.00	0.00	0.00	0.00	0.00
43	SAGBEND	-92.93	-19.20	8.33	191.79	0.000	0.000	41.09	0.00	0.00	0.00	0.00	0.00
44	SAGBEND	-98.91	-20.07	8.30	197.84	0.000	0.000	41.09	0.00	0.00	0.00	0.00	0.00
45	SAGBEND	-104.90	-20.94	8.28	203.89	0.000	0.000	41.09	0.00	0.00	0.00	0.00	0.00
46	SAGBEND	-110.89	-21.81	8.26	209.94	0.000	0.000	41.08	0.00	0.00	0.00	0.00	0.00
47	SAGBEND	-116.87	-22.68	8.24	215.99	0.000	0.000	41.08	0.00	0.00	0.00	0.00	0.00
48	SAGBEND	-122.86	-23.55	8.22	222.04	0.000	0.000	41.08	0.00	0.00	0.00	0.00	0.00
49	SAGBEND	-128.85	-24.41	8.19	228.09	0.000	0.000	41.08	0.00	0.00	0.00	0.00	0.00
50	SAGBEND	-134.84	-25.27	8.17	234.14	0.000	0.000	41.08	0.00	0.00	0.00	0.00	0.00
51	SAGBEND	-140.83	-26.13	8.15	240.19	0.000	0.000	41.07	0.00	0.00	0.00	0.00	0.00
52	SAGBEND	-146.82	-26.99	8.13	246.24	0.000	0.000	41.07	0.00	0.00	0.00	0.00	0.00

53	SAGBEND	-152.80	-27.84	8.11	252.29	0.000	0.000	41.07	0.00	0.00	0.00	0.00	0.00
54	SAGBEND	-158.79	-28.70	8.09	258.34	0.000	0.000	41.07	0.00	0.00	0.00	0.00	0.00
55	SAGBEND	-164.78	-29.54	8.06	264.39	0.000	0.000	41.06	0.00	0.00	0.00	0.00	0.00
56	SAGBEND	-170.77	-30.39	8.04	270.44	0.000	0.000	41.06	0.00	0.00	0.00	0.00	0.00
57	SAGBEND	-176.76	-31.24	8.02	276.49	0.000	0.000	41.06	0.00	0.00	0.00	0.00	0.00
58	SAGBEND	-182.76	-32.08	8.00	282.54	0.000	0.000	41.06	0.00	0.00	0.00	0.00	0.00
59	SAGBEND	-188.75	-32.92	7.98	288.59	0.000	0.000	41.06	0.00	0.00	0.00	0.00	0.00
60	SAGBEND	-194.74	-33.76	7.95	294.64	0.000	0.000	41.05	0.00	0.00	0.00	0.00	0.00

S T A T I C P I P E C O O R D I N A T E S, F O R C E S A N D S T R E S S E S

NODE NO.	PIPE SECTION	X COORD (M)	Y COORD (M)	VERT ANGLE (DEG)	PIPE LENGTH (M)	SUPPORT REACTION (KN)	SEPARA -TION (M)	AXIAL TENSION (KN)	BENDING MOMENT (KN-M)	TENSILE STRESS (MPA)	BENDING STRESS (MPA)	TOTAL STRESS (MPA)	PERCNT YIELD (PCT)
61	SAGBEND	-200.73	-34.60	7.93	300.69	0.000	0.000	41.05	0.00	0.00	0.00	0.00	0.00
62	SAGBEND	-206.72	-35.43	7.91	306.74	0.000	0.000	41.05	0.00	0.00	0.00	0.00	0.00
63	SAGBEND	-212.71	-36.26	7.89	312.79	0.000	0.000	41.05	0.00	0.00	0.00	0.00	0.00
64	SAGBEND	-218.71	-37.09	7.87	318.84	0.000	0.000	41.04	0.00	0.00	0.00	0.00	0.00
65	SAGBEND	-224.70	-37.92	7.85	324.89	0.000	0.000	41.04	0.00	0.00	0.00	0.00	0.00
66	SAGBEND	-229.88	-38.63	7.83	330.12	0.000	0.000	41.04	0.00	0.00	0.00	0.00	0.00
67	SAGBEND	-236.69	-39.51	6.93	336.99	0.000	0.000	40.96	0.00	0.00	0.00	0.00	0.00
68	SAGBEND	-242.70	-40.20	6.13	343.04	0.000	0.000	40.89	0.00	0.00	0.00	0.00	0.00
69	SAGBEND	-248.72	-40.80	5.33	349.09	0.000	0.000	40.83	0.00	0.00	0.00	0.00	0.00
70	SAGBEND	-254.75	-41.32	4.53	355.14	0.000	0.000	40.79	0.00	0.00	0.00	0.00	0.00
71	SAGBEND	-260.78	-41.76	3.73	361.19	0.000	0.000	40.74	0.00	0.00	0.00	0.00	0.00
72	SAGBEND	-266.82	-42.11	2.93	367.24	0.000	0.000	40.71	0.00	0.00	0.00	0.00	0.00
73	SAGBEND	-272.87	-42.38	2.12	373.29	0.000	0.000	40.69	0.00	0.00	0.00	0.00	0.00
74	SAGBEND	-278.91	-42.56	1.32	379.34	0.000	0.000	40.67	0.00	0.00	0.00	0.00	0.00
75	SAGBEND	-284.96	-42.65	0.52	385.39	0.034	0.000	40.66	-0.01	0.00	0.00	0.00	0.00
76	SEABED	-291.01	-42.67	0.01	391.44	0.463	0.000	40.66	0.00	0.00	0.00	0.00	0.00
77	SEABED	-297.06	-42.67	0.00	397.48	0.571	0.000	40.66	0.00	0.00	0.00	0.00	0.00
78	SEABED	-303.11	-42.67	0.00	403.53	0.572	0.000	40.66	0.00	0.00	0.00	0.00	0.00
79	SEABED	-309.16	-42.67	0.00	409.58	0.572	0.000	40.66	0.00	0.00	0.00	0.00	0.00
80	SEABED	-315.21	-42.67	0.00	415.63	0.572	0.000	40.66	0.00	0.00	0.00	0.00	0.00
81	SEABED	-321.26	-42.67	0.00	421.68	0.572	0.000	40.66	0.00	0.00	0.00	0.00	0.00
82	SEABED	-327.31	-42.67	0.00	427.73	0.572	0.000	40.66	0.00	0.00	0.00	0.00	0.00
83	SEABED	-333.36	-42.67	0.00	433.78	0.572	0.000	40.66	0.00	0.00	0.00	0.00	0.00
84	SEABED	-339.41	-42.67	0.00	439.83	0.572	0.000	40.66	0.00	0.00	0.00	0.00	0.00
85	SEABED	-345.46	-42.67	0.00	445.88	0.572	0.000	40.66	0.00	0.00	0.00	0.00	0.00
86	SEABED	-351.51	-42.67	0.00	451.93	0.572	0.000	40.66	0.00	0.00	0.00	0.00	0.00
87	SEABED	-357.56	-42.67	0.00	457.98	0.572	0.000	40.66	0.00	0.00	0.00	0.00	0.00
88	SEABED	-363.61	-42.67	0.00	464.03	0.572	0.000	40.66	0.00	0.00	0.00	0.00	0.00
89	SEABED	-369.66	-42.67	0.00	470.08	0.572	0.000	40.66	0.00	0.00	0.00	0.00	0.00
90	SEABED	-375.71	-42.67	0.00	476.13	0.572	0.000	40.66	0.00	0.00	0.00	0.00	0.00
91	SEABED	-381.76	-42.67	0.00	482.18	0.572	0.000	40.66	0.00	0.00	0.00	0.00	0.00
92	SEABED	-387.81	-42.67	0.00	488.23	0.572	0.000	40.66	0.00	0.00	0.00	0.00	0.00
93	SEABED	-393.86	-42.67	0.00	494.28	0.572	0.000	40.66	0.00	0.00	0.00	0.00	0.00
94	SEABED	-399.91	-42.67	0.00	500.33	0.572	0.000	40.66	0.00	0.00	0.00	0.00	0.00
95	SEABED	-405.96	-42.67	0.00	506.38	0.572	0.000	40.66	0.00	0.00	0.00	0.00	0.00
96	SEABED	-412.01	-42.67	0.00	512.43	0.572	0.000	40.66	0.00	0.00	0.00	0.00	0.00
97	SEABED	-418.06	-42.67	0.00	518.48	0.572	0.000	40.66	0.00	0.00	0.00	0.00	0.00
98	SEABED	-424.11	-42.67	0.00	524.53	0.572	0.000	40.66	0.00	0.00	0.00	0.00	0.00
99	SEABED	-430.15	-42.67	0.00	530.58	0.572	0.000	40.66	0.00	0.00	0.00	0.00	0.00
100	SEABED	-436.20	-42.67	0.00	536.63	0.572	0.000	40.66	0.00	0.00	0.00	0.00	0.00
101	SEABED	-442.25	-42.67	0.00	542.68	0.572	0.000	40.66	0.00	0.00	0.00	0.00	0.00
102	SEABED	-448.30	-42.67	0.00	548.73	0.572	0.000	40.66	0.00	0.00	0.00	0.00	0.00
103	SEABED	-454.35	-42.67	0.00	554.78	0.572	0.000	40.66	0.00	0.00	0.00	0.00	0.00
104	SEABED	-460.40	-42.67	0.00	560.83	0.572	0.000	40.66	0.00	0.00	0.00	0.00	0.00

S T A T I C P I P E C O O R D I N A T E S, F O R C E S A N D S T R E S S E S

NODE NO.	PIPE SECTION	X COORD (M)	Y COORD (M)	VERT ANGLE (DEG)	PIPE LENGTH (M)	SUPPORT REACTION (KN)	SEPARA -TION (M)	AXIAL TENSION (KN)	BENDING MOMENT (KN-M)	TENSILE STRESS (MPA)	BENDING STRESS (MPA)	TOTAL STRESS (MPA)	PERCNT YIELD (PCT)
105	SEABED	-466.45	-42.67	0.00	566.88	0.572	0.000	40.66	0.00	0.00	0.00	0.00	0.00
106	SEABED	-472.50	-42.67	0.00	572.93	0.572	0.000	40.66	0.00	0.00	0.00	0.00	0.00
107	SEABED	-478.55	-42.67	0.00	578.97	0.572	0.000	40.66	0.00	0.00	0.00	0.00	0.00
108	SEABED	-484.60	-42.67	0.00	585.02	0.572	0.000	40.66	0.00	0.00	0.00	0.00	0.00
109	SEABED	-490.65	-42.67	0.00	591.07	0.572	0.000	40.66	0.00	0.00	0.00	0.00	0.00
110	SEABED	-496.70	-42.67	0.00	597.12	0.572	0.000	40.66	0.00	0.00	0.00	0.00	0.00
111	SEABED	-502.75	-42.67	0.00	603.17	0.572	0.000	40.66	0.00	0.00	0.00	0.00	0.00
112	SEABED	-508.80	-42.67	0.00	609.22	0.572	0.000	40.66	0.00	0.00	0.00	0.00	0.00
113	SEABED	-514.85	-42.67	0.00	615.27	0.572	0.000	40.66	0.00	0.00	0.00	0.00	0.00
114	SEABED	-520.90	-42.67	0.00	621.32	0.572	0.000	40.66	0.00	0.00	0.00	0.00	0.00
115	SEABED	-526.95	-42.67	0.00	627.37	0.572	0.000	40.66	0.00	0.00	0.00	0.00	0.00
116	SEABED	-533.00	-42.67	0.00	633.42	0.572	0.000	40.66	0.00	0.00	0.00	0.00	0.00
117	SEABED	-539.05	-42.67	0.00	639.47	0.572	0.000	40.66	0.00	0.00	0.00	0.00	0.00
118	SEABED	-545.10	-42.67	0.00	645.52	0.572	0.000	40.66	0.00	0.00	0.00	0.00	0.00
119	SEABED	-551.15	-42.67	0.00	651.57	0.572	0.000	40.66	0.00	0.00	0.00	0.00	0.00
120	SEABED	-557.20	-42.67	0.00	657.62	0.572	0.000	40.66	0.00	0.00	0.00	0.00	0.00
121	SEABED	-563.25	-42.67	0.00	663.67	0.572	0.000	40.66	0.00	0.00	0.00	0.00	0.00
122	SEABED	-569.30	-42.67	0.00	669.72	0.572	0.000	40.66	0.00	0.00	0.00	0.00	0.00
123	SEABED	-575.35	-42.67	0.00	675.77	0.572	0.000	40.66	0.00	0.00	0.00	0.00	0.00
124	SEABED	-581.40	-42.67	0.00	681.82	0.572	0.000	40.66	0.00	0.00	0.00	0.00	0.00
125	SEABED	-587.45	-42.67	0.00	687.87	0.572	0.000	40.66	0.00	0.00	0.00	0.00	0.00
126	SEABED	-593.50	-42.67	0.00	693.92	0.572	0.000	40.66	0.00	0.00	0.00	0.00	0.00
127	SEABED	-599.55	-42.67	0.00	699.97	0.572	0.000	40.66	0.00	0.00	0.00	0.00	0.00
128	SEABED	-605.60	-42.67	0.00	706.02	0.572	0.000	40.66	0.00	0.00	0.00	0.00	0.00
129	SEABED	-611.64	-42.67	0.00	712.07	0.572	0.000	40.66	0.00	0.00	0.00	0.00	0.00
130	SEABED	-617.69	-42.67	0.00	718.12	0.572	0.000	40.66	0.00	0.00	0.00	0.00	0.00
131	SEABED	-623.74	-42.67	-0.01	724.17	0.549	0.000	40.66	0.00	0.00	0.00	0.00	0.00
132	SEABED	-629.67	-42.67	-0.13	730.10	0.000	0.000	40.66	0.00	0.00	0.00	0.00	0.00

S T A T I C P I P E C O O R D I N A T E S, F O R C E S A N D S T R E S S E S

NODE NO.	PIPE SECTION	X COORD (M)	Y COORD (M)	VERT ANGLE (DEG)	PIPE LENGTH (M)	SUPPORT REACTION (KN)	SEPARA -TION (M)	AXIAL TENSION (KN)	BENDING MOMENT (KN-M)	TENSILE STRESS (MPA)	BENDING STRESS (MPA)	TOTAL STRESS (MPA)	PERCNT YIELD (PCT)
1	LAYBARGE	96.31	6.41	1.93	0.00	9.943	0.000	0.00	2.75	0.00	4.25	4.25	1.18
3	LAYBARGE	84.28	6.05	1.58	12.04	24.069	0.000	-0.73	-19.09	-0.07	-29.55	29.62	8.23
5	LAYBARGE	73.45	5.73	1.90	22.87	24.651	0.000	-1.39	-29.95	-0.13	-46.36	46.50	12.92
7	TENSIONR	60.11	5.24	2.28	36.23	30.980	0.000	71.42	-22.08	6.88	-34.19	41.06	11.41
9	LAYBARGE	51.10	4.87	2.20	45.24	0.000	0.000	70.70	25.22	6.81	39.04	45.85	12.74
10	LAYBARGE	46.45	4.70	2.01	49.89	16.064	0.000	70.38	3.87	6.78	5.99	12.76	3.55
12	LAYBARGE	35.36	4.31	2.25	60.99	20.808	0.000	69.53	-42.49	6.69	-65.79	72.48	20.13
14	LAYBARGE	23.34	3.62	4.90	73.04	39.356	0.000	67.58	-157.17	6.51	-243.32	249.83	69.40
16	LAYBARGE	19.26	3.22	6.38	77.13	0.000	0.000	67.07	-122.10	6.46	-189.04	195.49	54.30
17	LAYBARGE	8.90	1.76	9.92	87.60	34.437	0.000	63.71	-175.25	6.13	-271.32	277.46	77.07
19	LAYBARGE	4.93	1.00	11.57	91.64	0.000	0.000	62.51	-140.53	6.02	-217.57	223.59	62.11
20	LAYBARGE	3.12	0.62	12.22	93.49	10.904	0.000	61.79	-132.96	5.95	-205.85	211.80	58.83
24	STINGER	-7.55	-1.97	14.86	104.47	13.731	0.000	58.81	-83.51	5.55	-129.29	134.94	37.48
26	STINGER	-16.36	-4.42	16.07	113.61	9.717	0.000	56.49	-35.48	5.19	-54.93	60.36	16.77
29	STINGER	-25.78	-7.16	16.13	123.42	2.970	0.000	53.78	15.67	4.77	24.26	29.43	8.18
31	STINGER	-36.29	-10.15	15.66	134.35	0.000	0.203	50.80	0.00	4.32	0.00	4.96	1.38
33	STINGER	-39.14	-10.56	8.35	137.23	0.000	1.094	51.22	0.00	0.00	0.00	0.00	0.00
35	SAGBEND	-45.24	-11.46	8.34	143.39	0.000	0.000	51.21	0.00	0.00	0.00	0.00	0.00
36	SAGBEND	-51.22	-12.34	8.32	149.44	0.000	0.000	51.21	0.00	0.00	0.00	0.00	0.00
37	SAGBEND	-57.21	-13.21	8.30	155.49	0.000	0.000	51.21	0.00	0.00	0.00	0.00	0.00
38	SAGBEND	-63.20	-14.08	8.29	161.54	0.000	0.000	51.21	0.00	0.00	0.00	0.00	0.00
39	SAGBEND	-69.18	-14.95	8.27	167.59	0.000	0.000	51.21	0.00	0.00	0.00	0.00	0.00
40	SAGBEND	-75.17	-15.82	8.25	173.64	0.000	0.000	51.20	0.00	0.00	0.00	0.00	0.00
41	SAGBEND	-81.16	-16.69	8.23	179.69	0.000	0.000	51.20	0.00	0.00	0.00	0.00	0.00
42	SAGBEND	-87.14	-17.56	8.22	185.74	0.000	0.000	51.20	0.00	0.00	0.00	0.00	0.00
43	SAGBEND	-93.13	-18.42	8.20	191.79	0.000	0.000	51.20	0.00	0.00	0.00	0.00	0.00
44	SAGBEND	-99.12	-19.28	8.18	197.84	0.000	0.000	51.19	0.00	0.00	0.00	0.00	0.00
45	SAGBEND	-105.11	-20.14	8.16	203.89	0.000	0.000	51.19	0.00	0.00	0.00	0.00	0.00
46	SAGBEND	-111.10	-21.00	8.15	209.94	0.000	0.000	51.19	0.00	0.00	0.00	0.00	0.00
47	SAGBEND	-117.09	-21.86	8.13	215.99	0.000	0.000	51.19	0.00	0.00	0.00	0.00	0.00
48	SAGBEND	-123.08	-22.71	8.11	222.04	0.000	0.000	51.18	0.00	0.00	0.00	0.00	0.00
49	SAGBEND	-129.07	-23.56	8.09	228.09	0.000	0.000	51.18	0.00	0.00	0.00	0.00	0.00
50	SAGBEND	-135.05	-24.42	8.08	234.14	0.000	0.000	51.18	0.00	0.00	0.00	0.00	0.00
51	SAGBEND	-141.04	-25.26	8.06	240.19	0.000	0.000	51.18	0.00	0.00	0.00	0.00	0.00
52	SAGBEND	-147.03	-26.11	8.04	246.24	0.000	0.000	51.18	0.00	0.00	0.00	0.00	0.00
53	SAGBEND	-153.03	-26.96	8.02	252.29	0.000	0.000	51.17	0.00	0.00	0.00	0.00	0.00
54	SAGBEND	-159.02	-27.80	8.01	258.34	0.000	0.000	51.17	0.00	0.00	0.00	0.00	0.00
55	SAGBEND	-165.01	-28.64	7.99	264.39	0.000	0.000	51.17	0.00	0.00	0.00	0.00	0.00
56	SAGBEND	-171.00	-29.48	7.97	270.44	0.000	0.000	51.17	0.00	0.00	0.00	0.00	0.00
57	SAGBEND	-176.99	-30.32	7.95	276.49	0.000	0.000	51.16	0.00	0.00	0.00	0.00	0.00
58	SAGBEND	-182.98	-31.16	7.94	282.54	0.000	0.000	51.16	0.00	0.00	0.00	0.00	0.00
59	SAGBEND	-188.97	-31.99	7.92	288.59	0.000	0.000	51.16	0.00	0.00	0.00	0.00	0.00
60	SAGBEND	-194.97	-32.82	7.90	294.64	0.000	0.000	51.16	0.00	0.00	0.00	0.00	0.00

USER ID - MZR LICENSED BY - PT Timas Suplindo CASE 10

S T A T I C P I P E C O O R D I N A T E S, F O R C E S A N D S T R E S S E S

NODE NO.	PIPE SECTION	X COORD (M)	Y COORD (M)	VERT ANGLE (DEG)	PIPE LENGTH (M)	SUPPORT REACTION (KN)	SEPARA -TION (M)	AXIAL TENSION (KN)	BENDING MOMENT (KN-M)	TENSILE STRESS (MPA)	BENDING STRESS (MPA)	TOTAL STRESS (MPA)	PERCNT YIELD (PCT)
61	SAGBEND	-200.96	-33.65	7.88	300.69	0.000	0.000	51.16	0.00	0.00	0.00	0.00	0.00
62	SAGBEND	-206.95	-34.48	7.87	306.74	0.000	0.000	51.15	0.00	0.00	0.00	0.00	0.00
63	SAGBEND	-212.94	-35.31	7.85	312.79	0.000	0.000	51.15	0.00	0.00	0.00	0.00	0.00
64	SAGBEND	-218.94	-36.14	7.83	318.84	0.000	0.000	51.15	0.00	0.00	0.00	0.00	0.00
65	SAGBEND	-224.93	-36.96	7.81	324.89	0.000	0.000	51.15	0.00	0.00	0.00	0.00	0.00
66	SAGBEND	-230.11	-37.67	7.80	330.12	0.000	0.000	51.15	0.00	0.00	0.00	0.00	0.00
67	SAGBEND	-236.92	-38.56	7.08	336.99	0.000	0.000	51.06	0.00	0.00	0.00	0.00	0.00
68	SAGBEND	-242.93	-39.27	6.44	343.04	0.000	0.000	50.99	0.00	0.00	0.00	0.00	0.00
69	SAGBEND	-248.95	-39.92	5.80	349.09	0.000	0.000	50.93	0.00	0.00	0.00	0.00	0.00
70	SAGBEND	-254.97	-40.49	5.16	355.14	0.000	0.000	50.88	0.00	0.00	0.00	0.00	0.00
71	SAGBEND	-261.00	-41.00	4.52	361.19	0.000	0.000	50.83	0.00	0.00	0.00	0.00	0.00
72	SAGBEND	-267.03	-41.45	3.87	367.24	0.000	0.000	50.79	0.00	0.00	0.00	0.00	0.00
73	SAGBEND	-273.07	-41.82	3.23	373.29	0.000	0.000	50.75	0.00	0.00	0.00	0.00	0.00
74	SAGBEND	-279.11	-42.13	2.58	379.34	0.000	0.000	50.72	0.00	0.00	0.00	0.00	0.00
75	SAGBEND	-285.15	-42.37	1.94	385.39	0.000	0.000	50.70	0.00	0.00	0.00	0.00	0.00
76	SAGBEND	-291.20	-42.54	1.29	391.44	0.000	0.000	50.69	0.00	0.00	0.00	0.00	0.00
77	SAGBEND	-297.25	-42.64	0.65	397.48	0.001	0.000	50.68	0.00	0.00	0.00	0.00	0.00
78	SEABED	-303.30	-42.67	0.04	403.53	0.295	0.000	50.67	-0.01	0.00	0.00	0.00	0.00
79	SEABED	-309.35	-42.67	0.00	409.58	0.564	0.000	50.67	0.00	0.00	0.00	0.00	0.00
80	SEABED	-315.40	-42.67	0.00	415.63	0.572	0.000	50.67	0.00	0.00	0.00	0.00	0.00
81	SEABED	-321.45	-42.67	0.00	421.68	0.572	0.000	50.67	0.00	0.00	0.00	0.00	0.00
82	SEABED	-327.50	-42.67	0.00	427.73	0.572	0.000	50.67	0.00	0.00	0.00	0.00	0.00
83	SEABED	-333.55	-42.67	0.00	433.78	0.572	0.000	50.67	0.00	0.00	0.00	0.00	0.00
84	SEABED	-339.60	-42.67	0.00	439.83	0.572	0.000	50.67	0.00	0.00	0.00	0.00	0.00
85	SEABED	-345.65	-42.67	0.00	445.88	0.572	0.000	50.67	0.00	0.00	0.00	0.00	0.00
86	SEABED	-351.70	-42.67	0.00	451.93	0.572	0.000	50.67	0.00	0.00	0.00	0.00	0.00
87	SEABED	-357.75	-42.67	0.00	457.98	0.572	0.000	50.67	0.00	0.00	0.00	0.00	0.00
88	SEABED	-363.80	-42.67	0.00	464.03	0.572	0.000	50.67	0.00	0.00	0.00	0.00	0.00
89	SEABED	-369.85	-42.67	0.00	470.08	0.572	0.000	50.67	0.00	0.00	0.00	0.00	0.00
90	SEABED	-375.90	-42.67	0.00	476.13	0.572	0.000	50.67	0.00	0.00	0.00	0.00	0.00
91	SEABED	-381.95	-42.67	0.00	482.18	0.572	0.000	50.67	0.00	0.00	0.00	0.00	0.00
92	SEABED	-388.00	-42.67	0.00	488.23	0.572	0.000	50.67	0.00	0.00	0.00	0.00	0.00
93	SEABED	-394.05	-42.67	0.00	494.28	0.572	0.000	50.67	0.00	0.00	0.00	0.00	0.00
94	SEABED	-400.10	-42.67	0.00	500.33	0.572	0.000	50.67	0.00	0.00	0.00	0.00	0.00
95	SEABED	-406.14	-42.67	0.00	506.38	0.572	0.000	50.67	0.00	0.00	0.00	0.00	0.00
96	SEABED	-412.19	-42.67	0.00	512.43	0.572	0.000	50.67	0.00	0.00	0.00	0.00	0.00
97	SEABED	-418.24	-42.67	0.00	518.48	0.572	0.000	50.67	0.00	0.00	0.00	0.00	0.00
98	SEABED	-424.29	-42.67	0.00	524.53	0.572	0.000	50.67	0.00	0.00	0.00	0.00	0.00
99	SEABED	-430.34	-42.67	0.00	530.58	0.572	0.000	50.67	0.00	0.00	0.00	0.00	0.00
100	SEABED	-436.39	-42.67	0.00	536.63	0.572	0.000	50.67	0.00	0.00	0.00	0.00	0.00
101	SEABED	-442.44	-42.67	0.00	542.68	0.572	0.000	50.67	0.00	0.00	0.00	0.00	0.00
102	SEABED	-448.49	-42.67	0.00	548.73	0.572	0.000	50.67	0.00	0.00	0.00	0.00	0.00
103	SEABED	-454.54	-42.67	0.00	554.78	0.572	0.000	50.67	0.00	0.00	0.00	0.00	0.00
104	SEABED	-460.59	-42.67	0.00	560.83	0.572	0.000	50.67	0.00	0.00	0.00	0.00	0.00

S T A T I C P I P E C O O R D I N A T E S, F O R C E S A N D S T R E S S E S

NODE NO.	PIPE SECTION	X COORD (M)	Y COORD (M)	VERT ANGLE (DEG)	PIPE LENGTH (M)	SUPPORT REACTION (KN)	SEPARA -TION (M)	AXIAL TENSION (KN)	BENDING MOMENT (KN-M)	TENSILE STRESS (MPA)	BENDING STRESS (MPA)	TOTAL STRESS (MPA)	PERCNT YIELD (PCT)
105	SEABED	-466.64	-42.67	0.00	566.88	0.572	0.000	50.67	0.00	0.00	0.00	0.00	0.00
106	SEABED	-472.69	-42.67	0.00	572.93	0.572	0.000	50.67	0.00	0.00	0.00	0.00	0.00
107	SEABED	-478.74	-42.67	0.00	578.98	0.572	0.000	50.67	0.00	0.00	0.00	0.00	0.00
108	SEABED	-484.79	-42.67	0.00	585.03	0.572	0.000	50.67	0.00	0.00	0.00	0.00	0.00
109	SEABED	-490.84	-42.67	0.00	591.07	0.572	0.000	50.67	0.00	0.00	0.00	0.00	0.00
110	SEABED	-496.89	-42.67	0.00	597.12	0.572	0.000	50.67	0.00	0.00	0.00	0.00	0.00
111	SEABED	-502.94	-42.67	0.00	603.17	0.572	0.000	50.67	0.00	0.00	0.00	0.00	0.00
112	SEABED	-508.99	-42.67	0.00	609.22	0.572	0.000	50.67	0.00	0.00	0.00	0.00	0.00
113	SEABED	-515.04	-42.67	0.00	615.27	0.572	0.000	50.67	0.00	0.00	0.00	0.00	0.00
114	SEABED	-521.09	-42.67	0.00	621.32	0.572	0.000	50.67	0.00	0.00	0.00	0.00	0.00
115	SEABED	-527.14	-42.67	0.00	627.37	0.572	0.000	50.67	0.00	0.00	0.00	0.00	0.00
116	SEABED	-533.19	-42.67	0.00	633.42	0.572	0.000	50.67	0.00	0.00	0.00	0.00	0.00
117	SEABED	-539.24	-42.67	0.00	639.47	0.572	0.000	50.67	0.00	0.00	0.00	0.00	0.00
118	SEABED	-545.29	-42.67	0.00	645.52	0.572	0.000	50.67	0.00	0.00	0.00	0.00	0.00
119	SEABED	-551.34	-42.67	0.00	651.57	0.572	0.000	50.67	0.00	0.00	0.00	0.00	0.00
120	SEABED	-557.39	-42.67	0.00	657.62	0.572	0.000	50.67	0.00	0.00	0.00	0.00	0.00
121	SEABED	-563.44	-42.67	0.00	663.67	0.572	0.000	50.67	0.00	0.00	0.00	0.00	0.00
122	SEABED	-569.49	-42.67	0.00	669.72	0.572	0.000	50.67	0.00	0.00	0.00	0.00	0.00
123	SEABED	-575.54	-42.67	0.00	675.77	0.572	0.000	50.67	0.00	0.00	0.00	0.00	0.00
124	SEABED	-581.59	-42.67	0.00	681.82	0.572	0.000	50.67	0.00	0.00	0.00	0.00	0.00
125	SEABED	-587.64	-42.67	0.00	687.87	0.572	0.000	50.67	0.00	0.00	0.00	0.00	0.00
126	SEABED	-593.69	-42.67	0.00	693.92	0.572	0.000	50.67	0.00	0.00	0.00	0.00	0.00
127	SEABED	-599.74	-42.67	0.00	699.97	0.572	0.000	50.67	0.00	0.00	0.00	0.00	0.00
128	SEABED	-605.78	-42.67	0.00	706.02	0.572	0.000	50.67	0.00	0.00	0.00	0.00	0.00
129	SEABED	-611.83	-42.67	0.00	712.07	0.572	0.000	50.67	0.00	0.00	0.00	0.00	0.00
130	SEABED	-617.88	-42.67	0.00	718.12	0.572	0.000	50.67	0.00	0.00	0.00	0.00	0.00
131	SEABED	-623.93	-42.67	-0.01	724.17	0.544	0.000	50.67	0.00	0.00	0.00	0.00	0.00
132	SEABED	-629.86	-42.67	-0.12	730.10	0.000	0.000	50.67	0.00	0.00	0.00	0.00	0.00

S T A T I C P I P E C O O R D I N A T E S, F O R C E S A N D S T R E S S E S

NODE NO.	PIPE SECTION	X COORD (M)	Y COORD (M)	VERT ANGLE (DEG)	PIPE LENGTH (M)	SUPPORT REACTION (KN)	SEPARA -TION (M)	AXIAL TENSION (KN)	BENDING MOMENT (KN-M)	TENSILE STRESS (MPA)	BENDING STRESS (MPA)	TOTAL STRESS (MPA)	PERCNT YIELD (PCT)
1	LAYBARGE	96.31	6.41	1.93	0.00	9.943	0.000	0.00	2.75	0.00	4.25	4.25	1.18
3	LAYBARGE	84.28	6.05	1.58	12.04	24.068	0.000	-0.73	-19.09	-0.07	-29.55	29.62	8.23
5	LAYBARGE	73.45	5.73	1.90	22.87	24.655	0.000	-1.39	-29.95	-0.13	-46.37	46.51	12.92
7	TENSIONR	60.11	5.24	2.28	36.23	30.966	0.000	71.42	-22.06	6.88	-34.15	41.03	11.40
9	LAYBARGE	51.10	4.87	2.20	45.24	0.000	0.000	70.70	25.15	6.81	38.94	45.75	12.71
10	LAYBARGE	46.45	4.70	2.01	49.89	16.130	0.000	70.38	3.77	6.78	5.84	12.61	3.50
12	LAYBARGE	35.36	4.31	2.25	60.99	20.560	0.000	69.53	-42.19	6.69	-65.31	72.00	20.00
14	LAYBARGE	23.34	3.62	4.91	73.04	40.125	0.000	67.57	-158.79	6.51	-245.84	252.34	70.09
16	LAYBARGE	19.26	3.22	6.41	77.13	0.000	0.000	67.07	-121.69	6.46	-188.39	194.85	54.12
17	LAYBARGE	8.90	1.76	9.85	87.60	25.875	0.000	63.76	-171.08	6.14	-264.86	271.00	75.28
19	LAYBARGE	4.93	1.01	11.60	91.64	0.000	0.000	62.34	-166.04	6.00	-257.06	263.06	73.07
20	LAYBARGE	3.12	0.62	12.40	93.49	20.857	0.000	61.51	-173.23	5.92	-268.19	274.11	76.14
24	STINGER	-7.54	-2.10	15.96	104.49	15.148	0.000	58.57	-109.46	5.52	-169.46	175.09	48.64
26	STINGER	-16.29	-4.76	17.55	113.63	8.586	0.000	56.15	-41.58	5.14	-64.38	69.77	19.38
29	STINGER	-25.62	-7.74	17.65	123.43	3.289	0.000	53.20	18.71	4.68	28.96	34.07	9.46
31	STINGER	-36.05	-10.98	16.88	134.36	0.000	0.257	49.96	18.71	4.19	28.96	33.76	9.38
33	STINGER	-38.92	-11.85	16.80	137.35	0.000	0.801	49.09	0.00	4.06	0.00	4.83	1.34
35	SAGBEND	-44.91	-12.68	7.91	143.41	0.000	0.000	49.69	0.00	0.00	0.00	0.00	0.00
36	SAGBEND	-50.90	-13.51	7.89	149.46	0.000	0.000	49.69	0.00	0.00	0.00	0.00	0.00
37	SAGBEND	-56.89	-14.34	7.88	155.51	0.000	0.000	49.69	0.00	0.00	0.00	0.00	0.00
38	SAGBEND	-62.89	-15.17	7.86	161.55	0.000	0.000	49.69	0.00	0.00	0.00	0.00	0.00
39	SAGBEND	-68.88	-16.00	7.84	167.60	0.000	0.000	49.69	0.00	0.00	0.00	0.00	0.00
40	SAGBEND	-74.87	-16.82	7.82	173.65	0.000	0.000	49.68	0.00	0.00	0.00	0.00	0.00
41	SAGBEND	-80.87	-17.64	7.80	179.70	0.000	0.000	49.68	0.00	0.00	0.00	0.00	0.00
42	SAGBEND	-86.86	-18.47	7.79	185.75	0.000	0.000	49.68	0.00	0.00	0.00	0.00	0.00
43	SAGBEND	-92.85	-19.28	7.77	191.80	0.000	0.000	49.68	0.00	0.00	0.00	0.00	0.00
44	SAGBEND	-98.85	-20.10	7.75	197.85	0.000	0.000	49.68	0.00	0.00	0.00	0.00	0.00
45	SAGBEND	-104.84	-20.92	7.73	203.90	0.000	0.000	49.67	0.00	0.00	0.00	0.00	0.00
46	SAGBEND	-110.84	-21.73	7.71	209.95	0.000	0.000	49.67	0.00	0.00	0.00	0.00	0.00
47	SAGBEND	-116.83	-22.54	7.70	216.00	0.000	0.000	49.67	0.00	0.00	0.00	0.00	0.00
48	SAGBEND	-122.83	-23.35	7.68	222.05	0.000	0.000	49.67	0.00	0.00	0.00	0.00	0.00
49	SAGBEND	-128.82	-24.16	7.66	228.10	0.000	0.000	49.66	0.00	0.00	0.00	0.00	0.00
50	SAGBEND	-134.82	-24.96	7.64	234.15	0.000	0.000	49.66	0.00	0.00	0.00	0.00	0.00
51	SAGBEND	-140.82	-25.76	7.62	240.20	0.000	0.000	49.66	0.00	0.00	0.00	0.00	0.00
52	SAGBEND	-146.81	-26.57	7.60	246.25	0.000	0.000	49.66	0.00	0.00	0.00	0.00	0.00
53	SAGBEND	-152.81	-27.37	7.59	252.30	0.000	0.000	49.66	0.00	0.00	0.00	0.00	0.00
54	SAGBEND	-158.81	-28.16	7.57	258.35	0.000	0.000	49.65	0.00	0.00	0.00	0.00	0.00
55	SAGBEND	-164.80	-28.96	7.55	264.40	0.000	0.000	49.65	0.00	0.00	0.00	0.00	0.00
56	SAGBEND	-170.80	-29.75	7.53	270.45	0.000	0.000	49.65	0.00	0.00	0.00	0.00	0.00
57	SAGBEND	-176.80	-30.55	7.51	276.50	0.000	0.000	49.65	0.00	0.00	0.00	0.00	0.00
58	SAGBEND	-182.80	-31.34	7.50	282.55	0.000	0.000	49.65	0.00	0.00	0.00	0.00	0.00
59	SAGBEND	-188.79	-32.12	7.48	288.60	0.000	0.000	49.64	0.00	0.00	0.00	0.00	0.00
60	SAGBEND	-194.79	-32.91	7.46	294.65	0.000	0.000	49.64	0.00	0.00	0.00	0.00	0.00

S T A T I C P I P E C O O R D I N A T E S, F O R C E S A N D S T R E S S E S

NODE NO.	PIPE SECTION	X COORD (M)	Y COORD (M)	VERT ANGLE (DEG)	PIPE LENGTH (M)	SUPPORT REACTION (KN)	SEPARA -TION (M)	AXIAL TENSION (KN)	BENDING MOMENT (KN-M)	TENSILE STRESS (MPA)	BENDING STRESS (MPA)	TOTAL STRESS (MPA)	PERCNT YIELD (PCT)
61	SAGBEND	-200.79	-33.70	7.44	300.70	0.000	0.000	49.64	0.00	0.00	0.00	0.00	0.00
62	SAGBEND	-206.79	-34.48	7.42	306.75	0.000	0.000	49.64	0.00	0.00	0.00	0.00	0.00

63	SAGBEND	-212.79	-35.26	7.41	312.80	0.000	0.000	49.64	0.00	0.00	0.00	0.00	0.00
64	SAGBEND	-218.79	-36.04	7.39	318.85	0.000	0.000	49.63	0.00	0.00	0.00	0.00	0.00
65	SAGBEND	-224.79	-36.81	7.37	324.90	0.000	0.000	49.63	0.00	0.00	0.00	0.00	0.00
66	SAGBEND	-230.79	-37.59	7.35	330.95	0.000	0.000	49.63	0.00	0.00	0.00	0.00	0.00
67	SAGBEND	-233.85	-37.98	7.34	334.04	0.000	0.000	49.63	0.00	0.00	0.00	0.00	0.00
68	SAGBEND	-236.92	-38.38	7.33	337.13	0.000	0.000	49.63	0.00	0.00	0.00	0.00	0.00
69	SAGBEND	-242.79	-39.10	6.69	343.05	0.000	0.000	49.56	0.00	0.00	0.00	0.00	0.00
70	SAGBEND	-248.81	-39.77	6.03	349.10	0.000	0.000	49.50	0.00	0.00	0.00	0.00	0.00
71	SAGBEND	-254.83	-40.37	5.37	355.15	0.000	0.000	49.44	0.00	0.00	0.00	0.00	0.00
72	SAGBEND	-260.85	-40.91	4.71	361.20	0.000	0.000	49.39	0.00	0.00	0.00	0.00	0.00
73	SAGBEND	-266.88	-41.37	4.05	367.25	0.000	0.000	49.34	0.00	0.00	0.00	0.00	0.00
74	SAGBEND	-272.92	-41.76	3.39	373.30	0.000	0.000	49.31	0.00	0.00	0.00	0.00	0.00
75	SAGBEND	-278.96	-42.08	2.72	379.35	0.000	0.000	49.28	0.00	0.00	0.00	0.00	0.00
76	SAGBEND	-285.01	-42.34	2.06	385.40	0.000	0.000	49.25	0.00	0.00	0.00	0.00	0.00
77	SAGBEND	-291.05	-42.52	1.39	391.45	0.000	0.000	49.24	0.00	0.00	0.00	0.00	0.00
78	SAGBEND	-297.10	-42.63	0.73	397.49	0.000	0.000	49.23	0.00	0.00	0.00	0.00	0.00
79	SEABED	-303.15	-42.67	0.07	403.54	0.244	0.000	49.22	0.00	0.00	0.00	0.00	0.00
80	SEABED	-309.20	-42.67	0.00	409.59	0.560	0.000	49.22	0.00	0.00	0.00	0.00	0.00
81	SEABED	-315.25	-42.67	0.00	415.64	0.572	0.000	49.22	0.00	0.00	0.00	0.00	0.00
82	SEABED	-321.30	-42.67	0.00	421.69	0.572	0.000	49.22	0.00	0.00	0.00	0.00	0.00
83	SEABED	-327.35	-42.67	0.00	427.74	0.572	0.000	49.22	0.00	0.00	0.00	0.00	0.00
84	SEABED	-333.40	-42.67	0.00	433.79	0.572	0.000	49.22	0.00	0.00	0.00	0.00	0.00
85	SEABED	-339.45	-42.67	0.00	439.84	0.572	0.000	49.22	0.00	0.00	0.00	0.00	0.00
86	SEABED	-345.50	-42.67	0.00	445.89	0.572	0.000	49.22	0.00	0.00	0.00	0.00	0.00
87	SEABED	-351.55	-42.67	0.00	451.94	0.572	0.000	49.22	0.00	0.00	0.00	0.00	0.00
88	SEABED	-357.60	-42.67	0.00	457.99	0.572	0.000	49.22	0.00	0.00	0.00	0.00	0.00
89	SEABED	-363.65	-42.67	0.00	464.04	0.572	0.000	49.22	0.00	0.00	0.00	0.00	0.00
90	SEABED	-369.70	-42.67	0.00	470.09	0.572	0.000	49.22	0.00	0.00	0.00	0.00	0.00
91	SEABED	-375.75	-42.67	0.00	476.14	0.572	0.000	49.22	0.00	0.00	0.00	0.00	0.00
92	SEABED	-381.80	-42.67	0.00	482.19	0.572	0.000	49.22	0.00	0.00	0.00	0.00	0.00
93	SEABED	-387.85	-42.67	0.00	488.24	0.572	0.000	49.22	0.00	0.00	0.00	0.00	0.00
94	SEABED	-393.90	-42.67	0.00	494.29	0.572	0.000	49.22	0.00	0.00	0.00	0.00	0.00
95	SEABED	-399.95	-42.67	0.00	500.34	0.572	0.000	49.22	0.00	0.00	0.00	0.00	0.00
96	SEABED	-405.99	-42.67	0.00	506.39	0.572	0.000	49.22	0.00	0.00	0.00	0.00	0.00
97	SEABED	-412.04	-42.67	0.00	512.44	0.572	0.000	49.22	0.00	0.00	0.00	0.00	0.00
98	SEABED	-418.09	-42.67	0.00	518.49	0.572	0.000	49.22	0.00	0.00	0.00	0.00	0.00
99	SEABED	-424.14	-42.67	0.00	524.54	0.572	0.000	49.22	0.00	0.00	0.00	0.00	0.00
100	SEABED	-430.19	-42.67	0.00	530.59	0.572	0.000	49.22	0.00	0.00	0.00	0.00	0.00
101	SEABED	-436.24	-42.67	0.00	536.64	0.572	0.000	49.22	0.00	0.00	0.00	0.00	0.00
102	SEABED	-442.29	-42.67	0.00	542.69	0.572	0.000	49.22	0.00	0.00	0.00	0.00	0.00
103	SEABED	-448.34	-42.67	0.00	548.74	0.572	0.000	49.22	0.00	0.00	0.00	0.00	0.00
104	SEABED	-454.39	-42.67	0.00	554.79	0.572	0.000	49.22	0.00	0.00	0.00	0.00	0.00

S T A T I C P I P E C O O R D I N A T E S, F O R C E S A N D S T R E S S E S

NODE NO.	PIPE SECTION	X COORD (M)	Y COORD (M)	VERT ANGLE (DEG)	PIPE LENGTH (M)	SUPPORT REACTION (KN)	SEPARA -TION (M)	AXIAL TENSION (KN)	BENDING MOMENT (KN-M)	TENSILE STRESS (MPA)	BENDING STRESS (MPA)	TOTAL STRESS (MPA)	PERCNT YIELD (PCT)
105	SEABED	-460.44	-42.67	0.00	560.84	0.572	0.000	49.22	0.00	0.00	0.00	0.00	0.00
106	SEABED	-466.49	-42.67	0.00	566.89	0.572	0.000	49.22	0.00	0.00	0.00	0.00	0.00
107	SEABED	-472.54	-42.67	0.00	572.94	0.572	0.000	49.22	0.00	0.00	0.00	0.00	0.00
108	SEABED	-478.59	-42.67	0.00	578.98	0.572	0.000	49.22	0.00	0.00	0.00	0.00	0.00
109	SEABED	-484.64	-42.67	0.00	585.03	0.572	0.000	49.22	0.00	0.00	0.00	0.00	0.00
110	SEABED	-490.69	-42.67	0.00	591.08	0.572	0.000	49.22	0.00	0.00	0.00	0.00	0.00
111	SEABED	-496.74	-42.67	0.00	597.13	0.572	0.000	49.22	0.00	0.00	0.00	0.00	0.00
112	SEABED	-502.79	-42.67	0.00	603.18	0.572	0.000	49.22	0.00	0.00	0.00	0.00	0.00
113	SEABED	-508.84	-42.67	0.00	609.23	0.572	0.000	49.22	0.00	0.00	0.00	0.00	0.00
114	SEABED	-514.89	-42.67	0.00	615.28	0.572	0.000	49.22	0.00	0.00	0.00	0.00	0.00
115	SEABED	-520.94	-42.67	0.00	621.33	0.572	0.000	49.22	0.00	0.00	0.00	0.00	0.00
116	SEABED	-526.99	-42.67	0.00	627.38	0.572	0.000	49.22	0.00	0.00	0.00	0.00	0.00
117	SEABED	-533.04	-42.67	0.00	633.43	0.572	0.000	49.22	0.00	0.00	0.00	0.00	0.00
118	SEABED	-539.09	-42.67	0.00	639.48	0.572	0.000	49.22	0.00	0.00	0.00	0.00	0.00
119	SEABED	-545.14	-42.67	0.00	645.53	0.572	0.000	49.22	0.00	0.00	0.00	0.00	0.00
120	SEABED	-551.19	-42.67	0.00	651.58	0.572	0.000	49.22	0.00	0.00	0.00	0.00	0.00
121	SEABED	-557.24	-42.67	0.00	657.63	0.572	0.000	49.22	0.00	0.00	0.00	0.00	0.00
122	SEABED	-563.29	-42.67	0.00	663.68	0.572	0.000	49.22	0.00	0.00	0.00	0.00	0.00
123	SEABED	-569.34	-42.67	0.00	669.73	0.572	0.000	49.22	0.00	0.00	0.00	0.00	0.00
124	SEABED	-575.39	-42.67	0.00	675.78	0.572	0.000	49.22	0.00	0.00	0.00	0.00	0.00
125	SEABED	-581.44	-42.67	0.00	681.83	0.572	0.000	49.22	0.00	0.00	0.00	0.00	0.00
126	SEABED	-587.48	-42.67	0.00	687.88	0.572	0.000	49.22	0.00	0.00	0.00	0.00	0.00
127	SEABED	-593.53	-42.67	0.00	693.93	0.572	0.000	49.22	0.00	0.00	0.00	0.00	0.00
128	SEABED	-599.58	-42.67	0.00	699.98	0.572	0.000	49.22	0.00	0.00	0.00	0.00	0.00
129	SEABED	-605.63	-42.67	0.00	706.03	0.572	0.000	49.22	0.00	0.00	0.00	0.00	0.00
130	SEABED	-611.68	-42.67	0.00	712.08	0.572	0.000	49.22	0.00	0.00	0.00	0.00	0.00
131	SEABED	-617.73	-42.67	0.00	718.13	0.572	0.000	49.22	0.00	0.00	0.00	0.00	0.00
132	SEABED	-623.78	-42.67	0.00	724.18	0.572	0.000	49.22	0.00	0.00	0.00	0.00	0.00
133	SEABED	-629.83	-42.67	0.00	730.23	0.446	0.000	49.22	0.00	0.00	0.00	0.00	0.00
134	SEABED	-633.27	-42.67	-0.01	733.67	0.287	0.000	49.22	0.00	0.00	0.00	0.00	0.00
135	SEABED	-636.71	-42.67	-0.14	737.11	0.000	0.000	49.22	0.00	0.00	0.00	0.00	0.00

S T A T I C P I P E C O O R D I N A T E S, F O R C E S A N D S T R E S S E S

NODE NO.	PIPE SECTION	X COORD (M)	Y COORD (M)	VERT ANGLE (DEG)	PIPE LENGTH (M)	SUPPORT REACTION (KN)	SEPARA -TION (M)	AXIAL TENSION (KN)	BENDING MOMENT (KN-M)	TENSILE STRESS (MPA)	BENDING STRESS (MPA)	TOTAL STRESS (MPA)	PERCNT YIELD (PCT)
1	LAYBARGE	96.31	6.41	1.93	0.00	9.943	0.000	0.00	2.75	0.00	4.25	4.25	1.18
3	LAYBARGE	84.28	6.05	1.58	12.04	24.068	0.000	-0.73	-19.08	-0.07	-29.55	29.62	8.23
5	LAYBARGE	73.45	5.73	1.90	22.87	24.656	0.000	-1.39	-29.96	-0.13	-46.38	46.51	12.92
7	TENSIONR	60.11	5.24	2.28	36.23	30.970	0.000	75.52	-22.05	7.27	-34.14	41.41	11.50
9	LAYBARGE	51.10	4.87	2.20	45.24	0.000	0.000	74.80	25.14	7.20	38.92	46.12	12.81
10	LAYBARGE	46.45	4.70	2.01	49.89	16.078	0.000	74.48	3.83	7.17	5.93	13.10	3.64
12	LAYBARGE	35.36	4.31	2.25	60.99	20.714	0.000	73.63	-42.29	7.09	-65.48	72.57	20.16
14	LAYBARGE	23.34	3.62	4.91	73.04	40.208	0.000	71.67	-158.57	6.90	-245.49	252.39	70.11
16	LAYBARGE	19.26	3.22	6.40	77.13	0.000	0.000	71.17	-121.69	6.85	-188.39	195.24	54.23
17	LAYBARGE	8.90	1.76	9.87	87.60	28.778	0.000	67.84	-172.59	6.53	-267.20	273.73	76.04
19	LAYBARGE	4.93	1.01	11.59	91.64	0.000	0.000	66.50	-158.37	6.40	-245.18	251.58	69.88
20	LAYBARGE	3.12	0.62	12.35	93.49	17.947	0.000	65.70	-161.12	6.33	-249.44	255.76	71.05
24	STINGER	-7.54	-2.06	15.63	104.48	15.294	0.000	62.75	-102.46	5.92	-158.62	164.66	45.74
26	STINGER	-16.30	-4.66	17.09	113.62	8.732	0.000	60.36	-37.51	5.55	-58.07	63.88	17.74
29	STINGER	-25.66	-7.55	17.11	123.41	3.176	0.000	57.48	21.32	5.11	33.00	38.52	10.70
31	STINGER	-36.12	-10.69	16.29	134.34	0.000	0.251	54.35	19.29	4.63	29.87	35.09	9.75
33	STINGER	-39.01	-11.53	16.21	137.35	0.000	0.794	53.51	0.00	4.50	0.00	5.23	1.45
35	SAGBEND	-45.00	-12.36	7.87	143.40	0.000	0.000	54.08	0.00	0.00	0.00	0.00	0.00
36	SAGBEND	-51.00	-13.19	7.85	149.45	0.000	0.000	54.08	0.00	0.00	0.00	0.00	0.00
37	SAGBEND	-56.99	-14.02	7.84	155.50	0.000	0.000	54.08	0.00	0.00	0.00	0.00	0.00
38	SAGBEND	-62.98	-14.84	7.82	161.55	0.000	0.000	54.08	0.00	0.00	0.00	0.00	0.00
39	SAGBEND	-68.98	-15.66	7.80	167.60	0.000	0.000	54.08	0.00	0.00	0.00	0.00	0.00
40	SAGBEND	-74.97	-16.48	7.79	173.65	0.000	0.000	54.07	0.00	0.00	0.00	0.00	0.00
41	SAGBEND	-80.96	-17.30	7.77	179.70	0.000	0.000	54.07	0.00	0.00	0.00	0.00	0.00
42	SAGBEND	-86.96	-18.12	7.75	185.75	0.000	0.000	54.07	0.00	0.00	0.00	0.00	0.00
43	SAGBEND	-92.95	-18.93	7.74	191.80	0.000	0.000	54.07	0.00	0.00	0.00	0.00	0.00
44	SAGBEND	-98.95	-19.75	7.72	197.85	0.000	0.000	54.06	0.00	0.00	0.00	0.00	0.00
45	SAGBEND	-104.94	-20.56	7.70	203.90	0.000	0.000	54.06	0.00	0.00	0.00	0.00	0.00
46	SAGBEND	-110.94	-21.37	7.69	209.95	0.000	0.000	54.06	0.00	0.00	0.00	0.00	0.00
47	SAGBEND	-116.93	-22.18	7.67	216.00	0.000	0.000	54.06	0.00	0.00	0.00	0.00	0.00
48	SAGBEND	-122.93	-22.98	7.65	222.05	0.000	0.000	54.06	0.00	0.00	0.00	0.00	0.00
49	SAGBEND	-128.93	-23.79	7.64	228.10	0.000	0.000	54.05	0.00	0.00	0.00	0.00	0.00
50	SAGBEND	-134.92	-24.59	7.62	234.15	0.000	0.000	54.05	0.00	0.00	0.00	0.00	0.00
51	SAGBEND	-140.92	-25.39	7.60	240.20	0.000	0.000	54.05	0.00	0.00	0.00	0.00	0.00
52	SAGBEND	-146.92	-26.19	7.59	246.25	0.000	0.000	54.05	0.00	0.00	0.00	0.00	0.00
53	SAGBEND	-152.91	-26.99	7.57	252.30	0.000	0.000	54.05	0.00	0.00	0.00	0.00	0.00
54	SAGBEND	-158.91	-27.79	7.55	258.35	0.000	0.000	54.04	0.00	0.00	0.00	0.00	0.00
55	SAGBEND	-164.91	-28.58	7.54	264.40	0.000	0.000	54.04	0.00	0.00	0.00	0.00	0.00
56	SAGBEND	-170.90	-29.37	7.52	270.45	0.000	0.000	54.04	0.00	0.00	0.00	0.00	0.00
57	SAGBEND	-176.90	-30.16	7.50	276.50	0.000	0.000	54.04	0.00	0.00	0.00	0.00	0.00
58	SAGBEND	-182.90	-30.95	7.49	282.55	0.000	0.000	54.04	0.00	0.00	0.00	0.00	0.00
59	SAGBEND	-188.90	-31.74	7.47	288.60	0.000	0.000	54.03	0.00	0.00	0.00	0.00	0.00
60	SAGBEND	-194.90	-32.53	7.45	294.65	0.000	0.000	54.03	0.00	0.00	0.00	0.00	0.00

S T A T I C P I P E C O O R D I N A T E S, F O R C E S A N D S T R E S S E S

NODE NO.	PIPE SECTION	X COORD (M)	Y COORD (M)	VERT ANGLE (DEG)	PIPE LENGTH (M)	SUPPORT REACTION (KN)	SEPARA -TION (M)	AXIAL TENSION (KN)	BENDING MOMENT (KN-M)	TENSILE STRESS (MPA)	BENDING STRESS (MPA)	TOTAL STRESS (MPA)	PERCNT YIELD (PCT)
61	SAGBEND	-200.90	-33.31	7.44	300.70	0.000	0.000	54.03	0.00	0.00	0.00	0.00	0.00
62	SAGBEND	-206.90	-34.09	7.42	306.75	0.000	0.000	54.03	0.00	0.00	0.00	0.00	0.00
63	SAGBEND	-212.89	-34.87	7.40	312.80	0.000	0.000	54.03	0.00	0.00	0.00	0.00	0.00
64	SAGBEND	-218.89	-35.65	7.39	318.85	0.000	0.000	54.02	0.00	0.00	0.00	0.00	0.00
65	SAGBEND	-224.89	-36.43	7.37	324.90	0.000	0.000	54.02	0.00	0.00	0.00	0.00	0.00
66	SAGBEND	-230.89	-37.20	7.35	330.95	0.000	0.000	54.02	0.00	0.00	0.00	0.00	0.00
67	SAGBEND	-233.96	-37.60	7.35	334.04	0.000	0.000	54.02	0.00	0.00	0.00	0.00	0.00
68	SAGBEND	-237.02	-37.99	7.34	337.13	0.000	0.000	54.02	0.00	0.00	0.00	0.00	0.00
69	SAGBEND	-242.90	-38.72	6.75	343.05	0.000	0.000	53.95	0.00	0.00	0.00	0.00	0.00
70	SAGBEND	-248.91	-39.40	6.14	349.10	0.000	0.000	53.88	0.00	0.00	0.00	0.00	0.00
71	SAGBEND	-254.93	-40.01	5.54	355.15	0.000	0.000	53.83	0.00	0.00	0.00	0.00	0.00

72	SAGBEND	-260.95	-40.57	4.93	361.20	0.000	0.000	53.77	0.00	0.00	0.00	0.00	0.00
73	SAGBEND	-266.98	-41.05	4.32	367.25	0.000	0.000	53.73	0.00	0.00	0.00	0.00	0.00
74	SAGBEND	-273.02	-41.48	3.71	373.30	0.000	0.000	53.69	0.00	0.00	0.00	0.00	0.00
75	SAGBEND	-279.05	-41.84	3.11	379.35	0.000	0.000	53.65	0.00	0.00	0.00	0.00	0.00
76	SAGBEND	-285.10	-42.13	2.49	385.39	0.000	0.000	53.63	0.00	0.00	0.00	0.00	0.00
77	SAGBEND	-291.14	-42.37	1.88	391.44	0.000	0.000	53.60	0.00	0.00	0.00	0.00	0.00
78	SAGBEND	-297.19	-42.53	1.27	397.49	0.000	0.000	53.59	0.00	0.00	0.00	0.00	0.00
79	SAGBEND	-303.24	-42.63	0.66	403.54	0.000	0.000	53.58	0.00	0.00	0.00	0.00	0.00
80	SEABED	-309.29	-42.67	0.06	409.59	0.252	0.000	53.58	0.00	0.00	0.00	0.00	0.00
81	SEABED	-315.34	-42.67	0.00	415.64	0.560	0.000	53.57	0.00	0.00	0.00	0.00	0.00
82	SEABED	-321.39	-42.67	0.00	421.69	0.572	0.000	53.57	0.00	0.00	0.00	0.00	0.00
83	SEABED	-327.44	-42.67	0.00	427.74	0.572	0.000	53.57	0.00	0.00	0.00	0.00	0.00
84	SEABED	-333.49	-42.67	0.00	433.79	0.572	0.000	53.57	0.00	0.00	0.00	0.00	0.00
85	SEABED	-339.54	-42.67	0.00	439.84	0.572	0.000	53.57	0.00	0.00	0.00	0.00	0.00
86	SEABED	-345.59	-42.67	0.00	445.89	0.572	0.000	53.57	0.00	0.00	0.00	0.00	0.00
87	SEABED	-351.64	-42.67	0.00	451.94	0.572	0.000	53.57	0.00	0.00	0.00	0.00	0.00
88	SEABED	-357.69	-42.67	0.00	457.99	0.572	0.000	53.57	0.00	0.00	0.00	0.00	0.00
89	SEABED	-363.74	-42.67	0.00	464.04	0.572	0.000	53.57	0.00	0.00	0.00	0.00	0.00
90	SEABED	-369.78	-42.67	0.00	470.09	0.572	0.000	53.57	0.00	0.00	0.00	0.00	0.00
91	SEABED	-375.83	-42.67	0.00	476.14	0.572	0.000	53.57	0.00	0.00	0.00	0.00	0.00
92	SEABED	-381.88	-42.67	0.00	482.19	0.572	0.000	53.57	0.00	0.00	0.00	0.00	0.00
93	SEABED	-387.93	-42.67	0.00	488.24	0.572	0.000	53.57	0.00	0.00	0.00	0.00	0.00
94	SEABED	-393.98	-42.67	0.00	494.29	0.572	0.000	53.57	0.00	0.00	0.00	0.00	0.00
95	SEABED	-400.03	-42.67	0.00	500.34	0.572	0.000	53.57	0.00	0.00	0.00	0.00	0.00
96	SEABED	-406.08	-42.67	0.00	506.39	0.572	0.000	53.57	0.00	0.00	0.00	0.00	0.00
97	SEABED	-412.13	-42.67	0.00	512.44	0.572	0.000	53.57	0.00	0.00	0.00	0.00	0.00
98	SEABED	-418.18	-42.67	0.00	518.49	0.572	0.000	53.57	0.00	0.00	0.00	0.00	0.00
99	SEABED	-424.23	-42.67	0.00	524.54	0.572	0.000	53.57	0.00	0.00	0.00	0.00	0.00
100	SEABED	-430.28	-42.67	0.00	530.59	0.572	0.000	53.57	0.00	0.00	0.00	0.00	0.00
101	SEABED	-436.33	-42.67	0.00	536.64	0.572	0.000	53.57	0.00	0.00	0.00	0.00	0.00
102	SEABED	-442.38	-42.67	0.00	542.69	0.572	0.000	53.57	0.00	0.00	0.00	0.00	0.00
103	SEABED	-448.43	-42.67	0.00	548.74	0.572	0.000	53.57	0.00	0.00	0.00	0.00	0.00
104	SEABED	-454.48	-42.67	0.00	554.79	0.572	0.000	53.57	0.00	0.00	0.00	0.00	0.00

S T A T I C P I P E C O O R D I N A T E S, F O R C E S A N D S T R E S S E S

NODE NO.	PIPE SECTION	X COORD (M)	Y COORD (M)	VERT ANGLE (DEG)	PIPE LENGTH (M)	SUPPORT REACTION (KN)	SEPARA -TION (M)	AXIAL TENSION (KN)	BENDING MOMENT (KN-M)	TENSILE STRESS (MPA)	BENDING STRESS (MPA)	TOTAL STRESS (MPA)	PERCNT YIELD (PCT)
105	SEABED	-460.53	-42.67	0.00	560.84	0.572	0.000	53.57	0.00	0.00	0.00	0.00	0.00
106	SEABED	-466.58	-42.67	0.00	566.89	0.572	0.000	53.57	0.00	0.00	0.00	0.00	0.00
107	SEABED	-472.63	-42.67	0.00	572.93	0.572	0.000	53.57	0.00	0.00	0.00	0.00	0.00
108	SEABED	-478.68	-42.67	0.00	578.98	0.572	0.000	53.57	0.00	0.00	0.00	0.00	0.00
109	SEABED	-484.73	-42.67	0.00	585.03	0.572	0.000	53.57	0.00	0.00	0.00	0.00	0.00
110	SEABED	-490.78	-42.67	0.00	591.08	0.572	0.000	53.57	0.00	0.00	0.00	0.00	0.00
111	SEABED	-496.83	-42.67	0.00	597.13	0.572	0.000	53.57	0.00	0.00	0.00	0.00	0.00
112	SEABED	-502.88	-42.67	0.00	603.18	0.572	0.000	53.57	0.00	0.00	0.00	0.00	0.00
113	SEABED	-508.93	-42.67	0.00	609.23	0.572	0.000	53.57	0.00	0.00	0.00	0.00	0.00
114	SEABED	-514.98	-42.67	0.00	615.28	0.572	0.000	53.57	0.00	0.00	0.00	0.00	0.00
115	SEABED	-521.03	-42.67	0.00	621.33	0.572	0.000	53.57	0.00	0.00	0.00	0.00	0.00
116	SEABED	-527.08	-42.67	0.00	627.38	0.572	0.000	53.57	0.00	0.00	0.00	0.00	0.00
117	SEABED	-533.13	-42.67	0.00	633.43	0.572	0.000	53.57	0.00	0.00	0.00	0.00	0.00
118	SEABED	-539.18	-42.67	0.00	639.48	0.572	0.000	53.57	0.00	0.00	0.00	0.00	0.00
119	SEABED	-545.23	-42.67	0.00	645.53	0.572	0.000	53.57	0.00	0.00	0.00	0.00	0.00
120	SEABED	-551.28	-42.67	0.00	651.58	0.572	0.000	53.57	0.00	0.00	0.00	0.00	0.00
121	SEABED	-557.32	-42.67	0.00	657.63	0.572	0.000	53.57	0.00	0.00	0.00	0.00	0.00
122	SEABED	-563.37	-42.67	0.00	663.68	0.572	0.000	53.57	0.00	0.00	0.00	0.00	0.00
123	SEABED	-569.42	-42.67	0.00	669.73	0.572	0.000	53.57	0.00	0.00	0.00	0.00	0.00
124	SEABED	-575.47	-42.67	0.00	675.78	0.572	0.000	53.57	0.00	0.00	0.00	0.00	0.00
125	SEABED	-581.52	-42.67	0.00	681.83	0.572	0.000	53.57	0.00	0.00	0.00	0.00	0.00
126	SEABED	-587.57	-42.67	0.00	687.88	0.572	0.000	53.57	0.00	0.00	0.00	0.00	0.00
127	SEABED	-593.62	-42.67	0.00	693.93	0.572	0.000	53.57	0.00	0.00	0.00	0.00	0.00
128	SEABED	-599.67	-42.67	0.00	699.98	0.572	0.000	53.57	0.00	0.00	0.00	0.00	0.00
129	SEABED	-605.72	-42.67	0.00	706.03	0.572	0.000	53.57	0.00	0.00	0.00	0.00	0.00
130	SEABED	-611.77	-42.67	0.00	712.08	0.572	0.000	53.57	0.00	0.00	0.00	0.00	0.00
131	SEABED	-617.82	-42.67	0.00	718.13	0.572	0.000	53.57	0.00	0.00	0.00	0.00	0.00
132	SEABED	-623.87	-42.67	0.00	724.18	0.572	0.000	53.57	0.00	0.00	0.00	0.00	0.00
133	SEABED	-629.92	-42.67	0.00	730.23	0.445	0.000	53.57	0.00	0.00	0.00	0.00	0.00
134	SEABED	-633.36	-42.67	-0.01	733.67	0.284	0.000	53.58	0.00	0.00	0.00	0.00	0.00
135	SEABED	-636.80	-42.67	-0.13	737.11	0.000	0.000	53.58	0.00	0.00	0.00	0.00	0.00

S T A T I C P I P E C O O R D I N A T E S, F O R C E S A N D S T R E S S E S

NODE NO.	PIPE SECTION	X COORD (M)	Y COORD (M)	VERT ANGLE (DEG)	PIPE LENGTH (M)	SUPPORT REACTION (KN)	SEPARA -TION (M)	AXIAL TENSION (KN)	BENDING MOMENT (KN-M)	TENSILE STRESS (MPA)	BENDING STRESS (MPA)	TOTAL STRESS (MPA)	PERCNT YIELD (PCT)
1	LAYBARGE	96.31	6.41	1.93	0.00	9.944	0.000	0.00	2.75	0.00	4.25	4.25	1.18
3	LAYBARGE	84.28	6.05	1.58	12.04	24.066	0.000	-0.73	-19.08	-0.07	-29.54	29.61	8.23
5	LAYBARGE	73.45	5.73	1.90	22.87	24.659	0.000	-1.39	-29.96	-0.13	-46.39	46.52	12.92
7	TENSIONR	60.11	5.24	2.28	36.23	30.958	0.000	75.52	-22.03	7.27	-34.11	41.38	11.50
9	LAYBARGE	51.10	4.87	2.20	45.24	0.000	0.000	74.80	25.08	7.20	38.83	46.03	12.79
10	LAYBARGE	46.45	4.70	2.02	49.89	16.139	0.000	74.48	3.74	7.17	5.78	12.96	3.60
12	LAYBARGE	35.36	4.31	2.25	60.99	20.482	0.000	73.63	-42.01	7.09	-65.03	72.12	20.03
14	LAYBARGE	23.34	3.62	4.92	73.04	40.930	0.000	71.66	-160.09	6.90	-247.84	254.74	70.76
16	LAYBARGE	19.26	3.22	6.42	77.13	0.000	0.000	71.17	-121.30	6.85	-187.78	194.64	54.07
17	LAYBARGE	8.90	1.76	9.81	87.60	20.726	0.000	67.89	-168.66	6.54	-261.11	267.65	74.35
19	LAYBARGE	4.93	1.01	11.62	91.64	0.000	0.000	66.32	-182.33	6.39	-282.27	288.66	80.18
20	LAYBARGE	3.12	0.62	12.52	93.49	27.354	0.000	65.40	-198.97	6.30	-308.04	314.34	87.32
24	STINGER	-7.53	-2.18	16.67	104.50	16.643	0.000	62.50	-126.78	5.89	-196.28	202.29	56.19
26	STINGER	-16.24	-4.97	18.48	113.64	7.655	0.000	60.03	-43.42	5.50	-67.22	72.98	20.27
29	STINGER	-25.51	-8.10	18.54	123.44	3.476	0.000	56.93	23.49	5.02	36.36	41.83	11.62
31	STINGER	-35.91	-11.49	17.48	134.37	0.000	0.299	53.54	35.37	4.50	54.76	59.89	16.64
33	STINGER	-38.76	-12.38	17.26	137.36	0.000	0.867	52.66	20.76	4.37	32.14	37.19	10.33
35	SAGBEND	-41.41	-13.20	17.18	140.13	0.000	0.000	51.84	0.00	4.24	0.00	5.11	1.42
36	SAGBEND	-44.65	-13.63	7.55	143.40	0.000	0.000	52.59	0.00	0.00	0.00	0.00	0.00
37	SAGBEND	-50.65	-14.42	7.53	149.45	0.000	0.000	52.59	0.00	0.00	0.00	0.00	0.00
38	SAGBEND	-56.64	-15.22	7.52	155.50	0.000	0.000	52.59	0.00	0.00	0.00	0.00	0.00
39	SAGBEND	-62.64	-16.01	7.50	161.55	0.000	0.000	52.59	0.00	0.00	0.00	0.00	0.00
40	SAGBEND	-68.64	-16.80	7.48	167.60	0.000	0.000	52.58	0.00	0.00	0.00	0.00	0.00
41	SAGBEND	-74.64	-17.58	7.47	173.65	0.000	0.000	52.58	0.00	0.00	0.00	0.00	0.00
42	SAGBEND	-80.64	-18.37	7.45	179.70	0.000	0.000	52.58	0.00	0.00	0.00	0.00	0.00
43	SAGBEND	-86.63	-19.15	7.43	185.75	0.000	0.000	52.58	0.00	0.00	0.00	0.00	0.00
44	SAGBEND	-92.63	-19.93	7.41	191.80	0.000	0.000	52.58	0.00	0.00	0.00	0.00	0.00
45	SAGBEND	-98.63	-20.71	7.40	197.85	0.000	0.000	52.57	0.00	0.00	0.00	0.00	0.00
46	SAGBEND	-104.63	-21.49	7.38	203.90	0.000	0.000	52.57	0.00	0.00	0.00	0.00	0.00
47	SAGBEND	-110.63	-22.27	7.36	209.95	0.000	0.000	52.57	0.00	0.00	0.00	0.00	0.00
48	SAGBEND	-116.63	-23.04	7.35	216.00	0.000	0.000	52.57	0.00	0.00	0.00	0.00	0.00
49	SAGBEND	-122.63	-23.81	7.33	222.05	0.000	0.000	52.57	0.00	0.00	0.00	0.00	0.00
50	SAGBEND	-128.63	-24.58	7.31	228.10	0.000	0.000	52.56	0.00	0.00	0.00	0.00	0.00
51	SAGBEND	-134.63	-25.35	7.30	234.15	0.000	0.000	52.56	0.00	0.00	0.00	0.00	0.00
52	SAGBEND	-140.63	-26.12	7.28	240.20	0.000	0.000	52.56	0.00	0.00	0.00	0.00	0.00
53	SAGBEND	-146.64	-26.89	7.26	246.25	0.000	0.000	52.56	0.00	0.00	0.00	0.00	0.00
54	SAGBEND	-152.64	-27.65	7.24	252.30	0.000	0.000	52.56	0.00	0.00	0.00	0.00	0.00
55	SAGBEND	-158.64	-28.41	7.23	258.35	0.000	0.000	52.55	0.00	0.00	0.00	0.00	0.00
56	SAGBEND	-164.64	-29.17	7.21	264.40	0.000	0.000	52.55	0.00	0.00	0.00	0.00	0.00
57	SAGBEND	-170.64	-29.93	7.19	270.45	0.000	0.000	52.55	0.00	0.00	0.00	0.00	0.00
58	SAGBEND	-176.64	-30.69	7.18	276.50	0.000	0.000	52.55	0.00	0.00	0.00	0.00	0.00
59	SAGBEND	-182.65	-31.44	7.16	282.55	0.000	0.000	52.55	0.00	0.00	0.00	0.00	0.00
60	SAGBEND	-188.65	-32.20	7.14	288.60	0.000	0.000	52.54	0.00	0.00	0.00	0.00	0.00

S T A T I C P I P E C O O R D I N A T E S, F O R C E S A N D S T R E S S E S

NODE NO.	PIPE SECTION	X COORD (M)	Y COORD (M)	VERT ANGLE (DEG)	PIPE LENGTH (M)	SUPPORT REACTION (KN)	SEPARA -TION (M)	AXIAL TENSION (KN)	BENDING MOMENT (KN-M)	TENSILE STRESS (MPA)	BENDING STRESS (MPA)	TOTAL STRESS (MPA)	PERCNT YIELD (PCT)
61	SAGBEND	-194.65	-32.95	7.12	294.65	0.000	0.000	52.54	0.00	0.00	0.00	0.00	0.00
62	SAGBEND	-200.66	-33.70	7.11	300.70	0.000	0.000	52.54	0.00	0.00	0.00	0.00	0.00
63	SAGBEND	-206.66	-34.44	7.09	306.75	0.000	0.000	52.54	0.00	0.00	0.00	0.00	0.00
64	SAGBEND	-212.66	-35.19	7.07	312.80	0.000	0.000	52.54	0.00	0.00	0.00	0.00	0.00
65	SAGBEND	-218.67	-35.93	7.06	318.85	0.000	0.000	52.53	0.00	0.00	0.00	0.00	0.00
66	SAGBEND	-224.67	-36.68	7.04	324.90	0.000	0.000	52.53	0.00	0.00	0.00	0.00	0.00
67	SAGBEND	-230.68	-37.42	7.02	330.94	0.000	0.000	52.53	0.00	0.00	0.00	0.00	0.00
68	SAGBEND	-236.68	-38.15	7.00	336.99	0.000	0.000	52.53	0.00	0.00	0.00	0.00	0.00
69	SAGBEND	-239.79	-38.54	7.00	340.13	0.000	0.000	52.53	0.00	0.00	0.00	0.00	0.00
70	SAGBEND	-244.24	-39.06	6.54	344.61	0.000	0.000	52.48	0.00	0.00	0.00	0.00	0.00
71	SAGBEND	-248.70	-39.56	6.08	349.09	0.000	0.000	52.43	0.00	0.00	0.00	0.00	0.00
72	SAGBEND	-254.72	-40.16	5.45	355.14	0.000	0.000	52.37	0.00	0.00	0.00	0.00	0.00
73	SAGBEND	-260.74	-40.71	4.83	361.19	0.000	0.000	52.32	0.00	0.00	0.00	0.00	0.00
74	SAGBEND	-266.77	-41.18	4.21	367.24	0.000	0.000	52.28	0.00	0.00	0.00	0.00	0.00
75	SAGBEND	-272.81	-41.59	3.58	373.29	0.000	0.000	52.24	0.00	0.00	0.00	0.00	0.00
76	SAGBEND	-278.85	-41.94	2.95	379.34	0.000	0.000	52.21	0.00	0.00	0.00	0.00	0.00
77	SAGBEND	-284.89	-42.22	2.33	385.39	0.000	0.000	52.18	0.00	0.00	0.00	0.00	0.00
78	SAGBEND	-290.94	-42.43	1.70	391.44	0.000	0.000	52.16	0.00	0.00	0.00	0.00	0.00
79	SAGBEND	-296.98	-42.58	1.07	397.49	0.000	0.000	52.15	0.00	0.00	0.00	0.00	0.00
80	SAGBEND	-303.03	-42.66	0.45	403.54	0.024	0.000	52.14	-0.01	0.00	0.00	0.00	0.00

81	SEABED	-309.08	-42.67	0.01	409.59	0.435	0.000	52.14	0.00	0.00	0.00	0.00	0.00
82	SEABED	-315.13	-42.67	0.00	415.64	0.570	0.000	52.14	0.00	0.00	0.00	0.00	0.00
83	SEABED	-321.18	-42.67	0.00	421.69	0.572	0.000	52.14	0.00	0.00	0.00	0.00	0.00
84	SEABED	-327.23	-42.67	0.00	427.74	0.572	0.000	52.14	0.00	0.00	0.00	0.00	0.00
85	SEABED	-333.28	-42.67	0.00	433.79	0.572	0.000	52.14	0.00	0.00	0.00	0.00	0.00
86	SEABED	-339.33	-42.67	0.00	439.84	0.572	0.000	52.14	0.00	0.00	0.00	0.00	0.00
87	SEABED	-345.38	-42.67	0.00	445.89	0.572	0.000	52.14	0.00	0.00	0.00	0.00	0.00
88	SEABED	-351.43	-42.67	0.00	451.94	0.572	0.000	52.14	0.00	0.00	0.00	0.00	0.00
89	SEABED	-357.48	-42.67	0.00	457.99	0.572	0.000	52.14	0.00	0.00	0.00	0.00	0.00
90	SEABED	-363.53	-42.67	0.00	464.04	0.572	0.000	52.14	0.00	0.00	0.00	0.00	0.00
91	SEABED	-369.58	-42.67	0.00	470.09	0.572	0.000	52.14	0.00	0.00	0.00	0.00	0.00
92	SEABED	-375.63	-42.67	0.00	476.14	0.572	0.000	52.14	0.00	0.00	0.00	0.00	0.00
93	SEABED	-381.68	-42.67	0.00	482.19	0.572	0.000	52.14	0.00	0.00	0.00	0.00	0.00
94	SEABED	-387.73	-42.67	0.00	488.24	0.572	0.000	52.14	0.00	0.00	0.00	0.00	0.00
95	SEABED	-393.78	-42.67	0.00	494.28	0.572	0.000	52.14	0.00	0.00	0.00	0.00	0.00
96	SEABED	-399.83	-42.67	0.00	500.33	0.572	0.000	52.14	0.00	0.00	0.00	0.00	0.00
97	SEABED	-405.88	-42.67	0.00	506.38	0.572	0.000	52.14	0.00	0.00	0.00	0.00	0.00
98	SEABED	-411.93	-42.67	0.00	512.43	0.572	0.000	52.14	0.00	0.00	0.00	0.00	0.00
99	SEABED	-417.98	-42.67	0.00	518.48	0.572	0.000	52.14	0.00	0.00	0.00	0.00	0.00
100	SEABED	-424.03	-42.67	0.00	524.53	0.572	0.000	52.14	0.00	0.00	0.00	0.00	0.00
101	SEABED	-430.08	-42.67	0.00	530.58	0.572	0.000	52.14	0.00	0.00	0.00	0.00	0.00
102	SEABED	-436.13	-42.67	0.00	536.63	0.572	0.000	52.14	0.00	0.00	0.00	0.00	0.00
103	SEABED	-442.18	-42.67	0.00	542.68	0.572	0.000	52.14	0.00	0.00	0.00	0.00	0.00
104	SEABED	-448.22	-42.67	0.00	548.73	0.572	0.000	52.14	0.00	0.00	0.00	0.00	0.00

S T A T I C P I P E C O O R D I N A T E S, F O R C E S A N D S T R E S S E S

NODE NO.	PIPE SECTION	X COORD (M)	Y COORD (M)	VERT ANGLE (DEG)	PIPE LENGTH (M)	SUPPORT REACTION (KN)	SEPARA -TION (M)	AXIAL TENSION (KN)	BENDING MOMENT (KN-M)	TENSILE STRESS (MPA)	BENDING STRESS (MPA)	TOTAL STRESS (MPA)	PERCNT YIELD (PCT)
105	SEABED	-454.27	-42.67	0.00	554.78	0.572	0.000	52.14	0.00	0.00	0.00	0.00	0.00
106	SEABED	-460.32	-42.67	0.00	560.83	0.572	0.000	52.14	0.00	0.00	0.00	0.00	0.00
107	SEABED	-466.37	-42.67	0.00	566.88	0.572	0.000	52.14	0.00	0.00	0.00	0.00	0.00
108	SEABED	-472.42	-42.67	0.00	572.93	0.572	0.000	52.14	0.00	0.00	0.00	0.00	0.00
109	SEABED	-478.47	-42.67	0.00	578.98	0.572	0.000	52.14	0.00	0.00	0.00	0.00	0.00
110	SEABED	-484.52	-42.67	0.00	585.03	0.572	0.000	52.14	0.00	0.00	0.00	0.00	0.00
111	SEABED	-490.57	-42.67	0.00	591.08	0.572	0.000	52.14	0.00	0.00	0.00	0.00	0.00
112	SEABED	-496.62	-42.67	0.00	597.13	0.572	0.000	52.14	0.00	0.00	0.00	0.00	0.00
113	SEABED	-502.67	-42.67	0.00	603.18	0.572	0.000	52.14	0.00	0.00	0.00	0.00	0.00
114	SEABED	-508.72	-42.67	0.00	609.23	0.572	0.000	52.14	0.00	0.00	0.00	0.00	0.00
115	SEABED	-514.77	-42.67	0.00	615.28	0.572	0.000	52.14	0.00	0.00	0.00	0.00	0.00
116	SEABED	-520.82	-42.67	0.00	621.33	0.572	0.000	52.14	0.00	0.00	0.00	0.00	0.00
117	SEABED	-526.87	-42.67	0.00	627.38	0.572	0.000	52.14	0.00	0.00	0.00	0.00	0.00
118	SEABED	-532.92	-42.67	0.00	633.43	0.572	0.000	52.14	0.00	0.00	0.00	0.00	0.00
119	SEABED	-538.97	-42.67	0.00	639.48	0.572	0.000	52.14	0.00	0.00	0.00	0.00	0.00
120	SEABED	-545.02	-42.67	0.00	645.53	0.572	0.000	52.14	0.00	0.00	0.00	0.00	0.00
121	SEABED	-551.07	-42.67	0.00	651.58	0.572	0.000	52.14	0.00	0.00	0.00	0.00	0.00
122	SEABED	-557.12	-42.67	0.00	657.62	0.572	0.000	52.14	0.00	0.00	0.00	0.00	0.00
123	SEABED	-563.17	-42.67	0.00	663.67	0.572	0.000	52.14	0.00	0.00	0.00	0.00	0.00
124	SEABED	-569.22	-42.67	0.00	669.72	0.572	0.000	52.14	0.00	0.00	0.00	0.00	0.00
125	SEABED	-575.27	-42.67	0.00	675.77	0.572	0.000	52.14	0.00	0.00	0.00	0.00	0.00
126	SEABED	-581.32	-42.67	0.00	681.82	0.572	0.000	52.14	0.00	0.00	0.00	0.00	0.00
127	SEABED	-587.37	-42.67	0.00	687.87	0.572	0.000	52.14	0.00	0.00	0.00	0.00	0.00
128	SEABED	-593.42	-42.67	0.00	693.92	0.572	0.000	52.14	0.00	0.00	0.00	0.00	0.00
129	SEABED	-599.47	-42.67	0.00	699.97	0.572	0.000	52.14	0.00	0.00	0.00	0.00	0.00
130	SEABED	-605.52	-42.67	0.00	706.02	0.572	0.000	52.14	0.00	0.00	0.00	0.00	0.00
131	SEABED	-611.56	-42.67	0.00	712.07	0.572	0.000	52.14	0.00	0.00	0.00	0.00	0.00
132	SEABED	-617.61	-42.67	0.00	718.12	0.572	0.000	52.14	0.00	0.00	0.00	0.00	0.00
133	SEABED	-623.66	-42.67	0.00	724.17	0.572	0.000	52.14	0.00	0.00	0.00	0.00	0.00
134	SEABED	-629.71	-42.67	0.00	730.22	0.571	0.000	52.14	0.00	0.00	0.00	0.00	0.00
135	SEABED	-635.76	-42.67	-0.01	736.27	0.429	0.000	52.14	0.00	0.00	0.00	0.00	0.00
136	SEABED	-639.59	-42.67	-0.13	740.10	0.000	0.000	52.14	0.00	0.00	0.00	0.00	0.00

S T A T I C P I P E C O O R D I N A T E S, F O R C E S A N D S T R E S S E S

NODE NO.	PIPE SECTION	X COORD (M)	Y COORD (M)	VERT ANGLE (DEG)	PIPE LENGTH (M)	SUPPORT REACTION (KN)	SEPARA -TION (M)	AXIAL TENSION (KN)	BENDING MOMENT (KN-M)	TENSILE STRESS (MPA)	BENDING STRESS (MPA)	TOTAL STRESS (MPA)	PERCNT YIELD (PCT)
1	LAYBARGE	96.31	6.41	1.93	0.00	9.944	0.000	0.00	2.75	0.00	4.25	4.25	1.18
3	LAYBARGE	84.28	6.05	1.58	12.04	24.064	0.000	-0.73	-19.08	-0.07	-29.54	29.61	8.22
5	LAYBARGE	73.45	5.73	1.90	22.87	24.667	0.000	-1.39	-29.98	-0.13	-46.41	46.55	12.93
7	TENSIONR	60.11	5.24	2.28	36.23	30.984	0.000	108.12	-21.95	10.41	-33.99	44.40	12.33
9	LAYBARGE	51.10	4.87	2.20	45.24	0.000	0.000	107.40	24.94	10.34	38.62	48.96	13.60
10	LAYBARGE	46.45	4.70	2.01	49.89	15.757	0.000	107.08	4.16	10.31	6.44	16.75	4.65
12	LAYBARGE	35.36	4.31	2.26	60.99	21.605	0.000	106.22	-42.73	10.23	-66.15	76.38	21.22
14	LAYBARGE	23.34	3.62	4.90	73.04	41.901	0.000	104.26	-159.00	10.04	-246.15	256.19	71.16
16	LAYBARGE	19.26	3.22	6.39	77.13	0.000	0.000	103.77	-121.12	9.99	-187.50	197.50	54.86
17	LAYBARGE	8.90	1.76	9.93	87.60	40.400	0.000	100.36	-179.02	9.66	-277.16	286.82	79.67
19	LAYBARGE	4.93	1.00	11.56	91.64	0.000	0.000	99.26	-131.63	9.56	-203.79	213.35	59.26
20	LAYBARGE	3.12	0.62	12.15	93.49	7.886	0.000	98.57	-118.73	9.49	-183.82	193.31	53.70
24	STINGER	-7.56	-1.92	14.50	104.46	16.808	0.000	95.58	-79.18	9.09	-122.58	131.78	36.60
26	STINGER	-16.38	-4.31	15.47	113.61	8.895	0.000	93.33	-19.48	8.74	-30.16	39.13	10.87
29	STINGER	-25.81	-6.90	15.07	123.38	2.748	0.000	90.71	37.58	8.34	58.18	66.90	18.58
31	STINGER	-36.40	-9.62	13.78	134.31	0.000	0.253	87.99	38.79	7.93	60.06	68.51	19.03
33	STINGER	-39.30	-10.33	13.54	137.30	0.000	0.814	87.31	22.58	7.82	34.95	43.34	12.04
35	SAGBEND	-42.05	-10.99	13.45	140.13	0.000	0.000	86.66	0.00	7.72	0.00	8.38	2.33
36	SAGBEND	-45.29	-11.40	7.31	143.40	0.000	0.000	87.16	0.00	0.00	0.00	0.00	0.00
37	SAGBEND	-51.29	-12.17	7.30	149.45	0.000	0.000	87.16	0.00	0.00	0.00	0.00	0.00
38	SAGBEND	-57.29	-12.94	7.29	155.50	0.000	0.000	87.16	0.00	0.00	0.00	0.00	0.00
39	SAGBEND	-63.29	-13.71	7.28	161.55	0.000	0.000	87.16	0.00	0.00	0.00	0.00	0.00
40	SAGBEND	-69.29	-14.47	7.27	167.60	0.000	0.000	87.15	0.00	0.00	0.00	0.00	0.00
41	SAGBEND	-75.29	-15.24	7.26	173.65	0.000	0.000	87.15	0.00	0.00	0.00	0.00	0.00
42	SAGBEND	-81.30	-16.00	7.25	179.70	0.000	0.000	87.15	0.00	0.00	0.00	0.00	0.00
43	SAGBEND	-87.30	-16.76	7.24	185.75	0.000	0.000	87.15	0.00	0.00	0.00	0.00	0.00
44	SAGBEND	-93.30	-17.53	7.23	191.80	0.000	0.000	87.15	0.00	0.00	0.00	0.00	0.00
45	SAGBEND	-99.30	-18.29	7.22	197.85	0.000	0.000	87.14	0.00	0.00	0.00	0.00	0.00
46	SAGBEND	-105.30	-19.05	7.21	203.90	0.000	0.000	87.14	0.00	0.00	0.00	0.00	0.00
47	SAGBEND	-111.31	-19.80	7.19	209.95	0.000	0.000	87.14	0.00	0.00	0.00	0.00	0.00
48	SAGBEND	-117.31	-20.56	7.18	216.00	0.000	0.000	87.14	0.00	0.00	0.00	0.00	0.00
49	SAGBEND	-123.31	-21.32	7.17	222.05	0.000	0.000	87.14	0.00	0.00	0.00	0.00	0.00
50	SAGBEND	-129.31	-22.07	7.16	228.10	0.000	0.000	87.13	0.00	0.00	0.00	0.00	0.00
51	SAGBEND	-135.32	-22.83	7.15	234.15	0.000	0.000	87.13	0.00	0.00	0.00	0.00	0.00
52	SAGBEND	-141.32	-23.58	7.14	240.20	0.000	0.000	87.13	0.00	0.00	0.00	0.00	0.00
53	SAGBEND	-147.32	-24.33	7.13	246.25	0.000	0.000	87.13	0.00	0.00	0.00	0.00	0.00
54	SAGBEND	-153.32	-25.08	7.12	252.30	0.000	0.000	87.13	0.00	0.00	0.00	0.00	0.00
55	SAGBEND	-159.33	-25.83	7.11	258.35	0.000	0.000	87.12	0.00	0.00	0.00	0.00	0.00
56	SAGBEND	-165.33	-26.58	7.10	264.40	0.000	0.000	87.12	0.00	0.00	0.00	0.00	0.00
57	SAGBEND	-171.33	-27.33	7.09	270.44	0.000	0.000	87.12	0.00	0.00	0.00	0.00	0.00
58	SAGBEND	-177.34	-28.07	7.08	276.49	0.000	0.000	87.12	0.00	0.00	0.00	0.00	0.00
59	SAGBEND	-183.34	-28.82	7.07	282.54	0.000	0.000	87.12	0.00	0.00	0.00	0.00	0.00
60	SAGBEND	-189.35	-29.56	7.06	288.59	0.000	0.000	87.11	0.00	0.00	0.00	0.00	0.00

S T A T I C P I P E C O O R D I N A T E S, F O R C E S A N D S T R E S S E S

NODE NO.	PIPE SECTION	X COORD (M)	Y COORD (M)	VERT ANGLE (DEG)	PIPE LENGTH (M)	SUPPORT REACTION (KN)	SEPARA -TION (M)	AXIAL TENSION (KN)	BENDING MOMENT (KN-M)	TENSILE STRESS (MPA)	BENDING STRESS (MPA)	TOTAL STRESS (MPA)	PERCNT YIELD (PCT)
61	SAGBEND	-195.35	-30.31	7.05	294.64	0.000	0.000	87.11	0.00	0.00	0.00	0.00	0.00
62	SAGBEND	-201.35	-31.05	7.04	300.69	0.000	0.000	87.11	0.00	0.00	0.00	0.00	0.00
63	SAGBEND	-207.36	-31.79	7.03	306.74	0.000	0.000	87.11	0.00	0.00	0.00	0.00	0.00
64	SAGBEND	-213.36	-32.53	7.02	312.79	0.000	0.000	87.11	0.00	0.00	0.00	0.00	0.00
65	SAGBEND	-219.37	-33.27	7.01	318.84	0.000	0.000	87.10	0.00	0.00	0.00	0.00	0.00
66	SAGBEND	-225.37	-34.00	7.00	324.89	0.000	0.000	87.10	0.00	0.00	0.00	0.00	0.00
67	SAGBEND	-231.38	-34.74	6.99	330.94	0.000	0.000	87.10	0.00	0.00	0.00	0.00	0.00
68	SAGBEND	-237.38	-35.48	6.98	336.99	0.000	0.000	87.10	0.00	0.00	0.00	0.00	0.00
69	SAGBEND	-240.49	-35.86	6.97	340.12	0.000	0.000	87.10	0.00	0.00	0.00	0.00	0.00
70	SAGBEND	-244.94	-36.39	6.70	344.61	0.000	0.000	87.05	0.00	0.00	0.00	0.00	0.00
71	SAGBEND	-249.40	-36.90	6.42	349.09	0.000	0.000	87.00	0.00	0.00	0.00	0.00	0.00
72	SAGBEND	-255.41	-37.56	6.04	355.14	0.000	0.000	86.94	0.00	0.00	0.00	0.00	0.00
73	SAGBEND	-261.43	-38.18	5.67	361.19	0.000	0.000	86.88	0.00	0.00	0.00	0.00	0.00
74	SAGBEND	-267.45	-38.75	5.29	367.24	0.000	0.000	86.82	0.00	0.00	0.00	0.00	0.00
75	SAGBEND	-273.48	-39.29	4.92	373.29	0.000	0.000	86.77	0.00	0.00	0.00	0.00	0.00
76	SAGBEND	-279.51	-39.79	4.54	379.34	0.000	0.000	86.73	0.00	0.00	0.00	0.00	0.00
77	SAGBEND	-285.54	-40.25	4.16	385.39	0.000	0.000	86.68	0.00	0.00	0.00	0.00	0.00
78	SAGBEND	-291.57	-40.67	3.79	391.44	0.000	0.000	86.64	0.00	0.00	0.00	0.00	0.00
79	SAGBEND	-297.61	-41.05	3.41	397.49	0.000	0.000	86.61	0.00	0.00	0.00	0.00	0.00
80	SAGBEND	-303.65	-41.39	3.03	403.54	0.000	0.000	86.57	0.00	0.00	0.00	0.00	0.00
81	SAGBEND	-309.69	-41.69	2.65	409.59	0.000	0.000	86.55	0.00	0.00	0.00	0.00	0.00
82	SAGBEND	-315.74	-41.95	2.28	415.64	0.000	0.000	86.52	0.00	0.00	0.00	0.00	0.00
83	SAGBEND	-321.78	-42.17	1.90	421.69	0.000	0.000	86.50	0.00	0.00	0.00	0.00	0.00
84	SAGBEND	-327.83	-42.35	1.52	427.74	0.000	0.000	86.48	0.00	0.00	0.00	0.00	0.00
85	SAGBEND	-333.88	-42.49	1.14	433.79	0.000	0.000	86.47	0.00	0.00	0.00	0.00	0.00
86	SAGBEND	-339.93	-42.59	0.76	439.84	0.000	0.000	86.46	0.00	0.00	0.00	0.00	0.00
87	SAGBEND	-345.98	-42.65	0.39	445.89	0.002	0.000	86.46	0.00	0.00	0.00	0.00	0.00

88	SEABED	-352.03	-42.67	0.03	451.94	0.295	0.000	86.45	-0.01	0.00	0.00	0.00	0.00
89	SEABED	-358.08	-42.67	0.00	457.99	0.557	0.000	86.45	0.00	0.00	0.00	0.00	0.00
90	SEABED	-364.13	-42.67	0.00	464.04	0.571	0.000	86.45	0.00	0.00	0.00	0.00	0.00
91	SEABED	-370.17	-42.67	0.00	470.09	0.572	0.000	86.45	0.00	0.00	0.00	0.00	0.00
92	SEABED	-376.22	-42.67	0.00	476.14	0.572	0.000	86.45	0.00	0.00	0.00	0.00	0.00
93	SEABED	-382.27	-42.67	0.00	482.19	0.572	0.000	86.45	0.00	0.00	0.00	0.00	0.00
94	SEABED	-388.32	-42.67	0.00	488.24	0.572	0.000	86.45	0.00	0.00	0.00	0.00	0.00
95	SEABED	-394.37	-42.67	0.00	494.29	0.572	0.000	86.45	0.00	0.00	0.00	0.00	0.00
96	SEABED	-400.42	-42.67	0.00	500.34	0.572	0.000	86.45	0.00	0.00	0.00	0.00	0.00
97	SEABED	-406.47	-42.67	0.00	506.39	0.572	0.000	86.45	0.00	0.00	0.00	0.00	0.00
98	SEABED	-412.52	-42.67	0.00	512.43	0.572	0.000	86.45	0.00	0.00	0.00	0.00	0.00
99	SEABED	-418.57	-42.67	0.00	518.48	0.572	0.000	86.45	0.00	0.00	0.00	0.00	0.00
100	SEABED	-424.62	-42.67	0.00	524.53	0.572	0.000	86.45	0.00	0.00	0.00	0.00	0.00
101	SEABED	-430.67	-42.67	0.00	530.58	0.572	0.000	86.45	0.00	0.00	0.00	0.00	0.00
102	SEABED	-436.72	-42.67	0.00	536.63	0.572	0.000	86.45	0.00	0.00	0.00	0.00	0.00
103	SEABED	-442.77	-42.67	0.00	542.68	0.572	0.000	86.45	0.00	0.00	0.00	0.00	0.00
104	SEABED	-448.82	-42.67	0.00	548.73	0.572	0.000	86.45	0.00	0.00	0.00	0.00	0.00

S T A T I C P I P E C O O R D I N A T E S, F O R C E S A N D S T R E S S E S

NODE NO.	PIPE SECTION	X COORD (M)	Y COORD (M)	VERT ANGLE (DEG)	PIPE LENGTH (M)	SUPPORT REACTION (KN)	SEPARA -TION (M)	AXIAL TENSION (KN)	BENDING MOMENT (KN-M)	TENSILE STRESS (MPA)	BENDING STRESS (MPA)	TOTAL STRESS (MPA)	PERCNT YIELD (PCT)
105	SEABED	-454.87	-42.67	0.00	554.78	0.572	0.000	86.45	0.00	0.00	0.00	0.00	0.00
106	SEABED	-460.92	-42.67	0.00	560.83	0.572	0.000	86.45	0.00	0.00	0.00	0.00	0.00
107	SEABED	-466.97	-42.67	0.00	566.88	0.572	0.000	86.45	0.00	0.00	0.00	0.00	0.00
108	SEABED	-473.02	-42.67	0.00	572.93	0.572	0.000	86.45	0.00	0.00	0.00	0.00	0.00
109	SEABED	-479.07	-42.67	0.00	578.98	0.572	0.000	86.45	0.00	0.00	0.00	0.00	0.00
110	SEABED	-485.12	-42.67	0.00	585.03	0.572	0.000	86.45	0.00	0.00	0.00	0.00	0.00
111	SEABED	-491.17	-42.67	0.00	591.08	0.572	0.000	86.45	0.00	0.00	0.00	0.00	0.00
112	SEABED	-497.22	-42.67	0.00	597.13	0.572	0.000	86.45	0.00	0.00	0.00	0.00	0.00
113	SEABED	-503.27	-42.67	0.00	603.18	0.572	0.000	86.45	0.00	0.00	0.00	0.00	0.00
114	SEABED	-509.32	-42.67	0.00	609.23	0.572	0.000	86.45	0.00	0.00	0.00	0.00	0.00
115	SEABED	-515.37	-42.67	0.00	615.28	0.572	0.000	86.45	0.00	0.00	0.00	0.00	0.00
116	SEABED	-521.42	-42.67	0.00	621.33	0.572	0.000	86.45	0.00	0.00	0.00	0.00	0.00
117	SEABED	-527.47	-42.67	0.00	627.38	0.572	0.000	86.45	0.00	0.00	0.00	0.00	0.00
118	SEABED	-533.52	-42.67	0.00	633.43	0.572	0.000	86.45	0.00	0.00	0.00	0.00	0.00
119	SEABED	-539.57	-42.67	0.00	639.48	0.572	0.000	86.45	0.00	0.00	0.00	0.00	0.00
120	SEABED	-545.62	-42.67	0.00	645.53	0.572	0.000	86.45	0.00	0.00	0.00	0.00	0.00
121	SEABED	-551.67	-42.67	0.00	651.58	0.572	0.000	86.45	0.00	0.00	0.00	0.00	0.00
122	SEABED	-557.72	-42.67	0.00	657.63	0.572	0.000	86.45	0.00	0.00	0.00	0.00	0.00
123	SEABED	-563.77	-42.67	0.00	663.68	0.572	0.000	86.45	0.00	0.00	0.00	0.00	0.00
124	SEABED	-569.82	-42.67	0.00	669.73	0.572	0.000	86.45	0.00	0.00	0.00	0.00	0.00
125	SEABED	-575.87	-42.67	0.00	675.78	0.572	0.000	86.45	0.00	0.00	0.00	0.00	0.00
126	SEABED	-581.92	-42.67	0.00	681.83	0.572	0.000	86.45	0.00	0.00	0.00	0.00	0.00
127	SEABED	-587.96	-42.67	0.00	687.88	0.572	0.000	86.45	0.00	0.00	0.00	0.00	0.00
128	SEABED	-594.01	-42.67	0.00	693.93	0.572	0.000	86.45	0.00	0.00	0.00	0.00	0.00
129	SEABED	-600.06	-42.67	0.00	699.98	0.572	0.000	86.45	0.00	0.00	0.00	0.00	0.00
130	SEABED	-606.11	-42.67	0.00	706.03	0.572	0.000	86.45	0.00	0.00	0.00	0.00	0.00
131	SEABED	-612.16	-42.67	0.00	712.08	0.572	0.000	86.45	0.00	0.00	0.00	0.00	0.00
132	SEABED	-618.21	-42.67	0.00	718.13	0.572	0.000	86.45	0.00	0.00	0.00	0.00	0.00
133	SEABED	-624.26	-42.67	0.00	724.18	0.572	0.000	86.45	0.00	0.00	0.00	0.00	0.00
134	SEABED	-630.31	-42.67	0.00	730.23	0.567	0.000	86.45	0.00	0.00	0.00	0.00	0.00
135	SEABED	-636.36	-42.67	-0.01	736.27	0.408	0.000	86.45	0.00	0.00	0.00	0.00	0.00
136	SEABED	-640.19	-42.67	-0.11	740.11	0.000	0.000	86.45	0.00	0.00	0.00	0.00	0.00

S T A T I C P I P E C O O R D I N A T E S, F O R C E S A N D S T R E S S E S

NODE NO.	PIPE SECTION	X COORD (M)	Y COORD (M)	VERT ANGLE (DEG)	PIPE LENGTH (M)	SUPPORT REACTION (KN)	SEPARA -TION (M)	AXIAL TENSION (KN)	BENDING MOMENT (KN-M)	TENSILE STRESS (MPA)	BENDING STRESS (MPA)	TOTAL STRESS (MPA)	PERCNT YIELD (PCT)
1	LAYBARGE	96.31	6.41	1.93	0.00	9.944	0.000	0.00	2.75	0.00	4.25	4.25	1.18
3	LAYBARGE	84.28	6.05	1.58	12.04	24.061	0.000	-0.73	-19.08	-0.07	-29.53	29.60	8.22
5	LAYBARGE	73.45	5.73	1.90	22.87	24.677	0.000	-1.39	-30.00	-0.13	-46.44	46.58	12.94
7	TENSIONR	60.11	5.24	2.28	36.23	30.951	0.000	108.12	-21.90	10.41	-33.91	44.32	12.31
9	LAYBARGE	51.10	4.87	2.20	45.24	0.000	0.000	107.40	24.79	10.34	38.38	48.72	13.53
10	LAYBARGE	46.45	4.70	2.02	49.89	15.922	0.000	107.08	3.92	10.31	6.06	16.37	4.55
12	LAYBARGE	35.36	4.31	2.25	60.99	20.974	0.000	106.23	-41.96	10.23	-64.96	75.19	20.88
14	LAYBARGE	23.34	3.62	4.94	73.04	43.892	0.000	104.23	-163.14	10.04	-252.57	262.61	72.95
16	LAYBARGE	19.27	3.21	6.45	77.13	0.000	0.000	103.77	-120.09	9.99	-185.91	195.90	54.42
17	LAYBARGE	8.90	1.76	9.76	87.60	18.098	0.000	100.50	-168.08	9.68	-260.21	269.88	74.97
19	LAYBARGE	4.93	1.01	11.64	91.64	0.000	0.000	98.80	-197.68	9.51	-306.04	315.55	87.65
20	LAYBARGE	3.12	0.62	12.64	93.49	34.794	0.000	97.76	-223.51	9.41	-346.03	355.44	98.73
24	STINGER	-7.52	-2.26	17.36	104.51	22.182	0.000	94.89	-147.99	9.01	-229.12	238.25	66.18
26	STINGER	-16.19	-5.17	19.26	113.66	5.329	0.000	92.45	-32.07	8.61	-49.65	58.54	16.26
29	STINGER	-25.42	-8.39	18.92	123.44	3.553	0.000	89.21	45.40	8.11	70.29	78.86	21.90
31	STINGER	-35.81	-11.77	16.91	134.37	0.000	0.385	85.72	84.76	7.59	131.22	139.45	38.74
33	STINGER	-38.67	-12.63	16.27	137.35	0.000	1.015	84.88	82.13	7.46	127.14	135.29	37.58
35	SAGBEND	-44.50	-14.26	15.15	143.40	0.000	0.000	83.32	58.72	7.21	90.91	98.90	27.47
36	SAGBEND	-47.75	-15.13	14.74	146.76	0.000	0.000	82.50	34.13	7.09	52.84	60.76	16.88
37	SAGBEND	-51.00	-15.98	14.58	150.13	0.000	0.000	81.67	0.00	6.96	0.00	7.96	2.21
38	SAGBEND	-56.34	-16.58	6.43	155.50	0.000	0.000	82.51	0.00	0.00	0.00	0.00	0.00
39	SAGBEND	-62.35	-17.25	6.42	161.55	0.000	0.000	82.51	0.00	0.00	0.00	0.00	0.00
40	SAGBEND	-68.36	-17.93	6.41	167.60	0.000	0.000	82.51	0.00	0.00	0.00	0.00	0.00
41	SAGBEND	-74.37	-18.60	6.39	173.65	0.000	0.000	82.51	0.00	0.00	0.00	0.00	0.00
42	SAGBEND	-80.39	-19.28	6.38	179.70	0.000	0.000	82.50	0.00	0.00	0.00	0.00	0.00
43	SAGBEND	-86.40	-19.95	6.37	185.75	0.000	0.000	82.50	0.00	0.00	0.00	0.00	0.00
44	SAGBEND	-92.41	-20.62	6.36	191.80	0.000	0.000	82.50	0.00	0.00	0.00	0.00	0.00
45	SAGBEND	-98.42	-21.29	6.35	197.85	0.000	0.000	82.50	0.00	0.00	0.00	0.00	0.00
46	SAGBEND	-104.44	-21.96	6.34	203.90	0.000	0.000	82.50	0.00	0.00	0.00	0.00	0.00
47	SAGBEND	-110.45	-22.63	6.33	209.95	0.000	0.000	82.50	0.00	0.00	0.00	0.00	0.00
48	SAGBEND	-116.46	-23.29	6.32	216.00	0.000	0.000	82.49	0.00	0.00	0.00	0.00	0.00
49	SAGBEND	-122.48	-23.96	6.31	222.05	0.000	0.000	82.49	0.00	0.00	0.00	0.00	0.00
50	SAGBEND	-128.49	-24.62	6.30	228.10	0.000	0.000	82.49	0.00	0.00	0.00	0.00	0.00
51	SAGBEND	-134.50	-25.29	6.29	234.15	0.000	0.000	82.49	0.00	0.00	0.00	0.00	0.00
52	SAGBEND	-140.52	-25.95	6.27	240.20	0.000	0.000	82.49	0.00	0.00	0.00	0.00	0.00
53	SAGBEND	-146.53	-26.61	6.26	246.25	0.000	0.000	82.48	0.00	0.00	0.00	0.00	0.00
54	SAGBEND	-152.54	-27.27	6.25	252.30	0.000	0.000	82.48	0.00	0.00	0.00	0.00	0.00
55	SAGBEND	-158.56	-27.93	6.24	258.35	0.000	0.000	82.48	0.00	0.00	0.00	0.00	0.00
56	SAGBEND	-164.57	-28.58	6.23	264.40	0.000	0.000	82.48	0.00	0.00	0.00	0.00	0.00
57	SAGBEND	-170.58	-29.24	6.22	270.45	0.000	0.000	82.48	0.00	0.00	0.00	0.00	0.00
58	SAGBEND	-176.60	-29.89	6.21	276.50	0.000	0.000	82.48	0.00	0.00	0.00	0.00	0.00
59	SAGBEND	-182.61	-30.55	6.20	282.55	0.000	0.000	82.47	0.00	0.00	0.00	0.00	0.00
60	SAGBEND	-188.63	-31.20	6.19	288.60	0.000	0.000	82.47	0.00	0.00	0.00	0.00	0.00

S T A T I C P I P E C O O R D I N A T E S, F O R C E S A N D S T R E S S E S

NODE NO.	PIPE SECTION	X COORD (M)	Y COORD (M)	VERT ANGLE (DEG)	PIPE LENGTH (M)	SUPPORT REACTION (KN)	SEPARA -TION (M)	AXIAL TENSION (KN)	BENDING MOMENT (KN-M)	TENSILE STRESS (MPA)	BENDING STRESS (MPA)	TOTAL STRESS (MPA)	PERCNT YIELD (PCT)
61	SAGBEND	-194.64	-31.85	6.18	294.65	0.000	0.000	82.47	0.00	0.00	0.00	0.00	0.00
62	SAGBEND	-200.66	-32.50	6.17	300.70	0.000	0.000	82.47	0.00	0.00	0.00	0.00	0.00
63	SAGBEND	-206.67	-33.15	6.15	306.75	0.000	0.000	82.47	0.00	0.00	0.00	0.00	0.00
64	SAGBEND	-212.69	-33.80	6.14	312.80	0.000	0.000	82.47	0.00	0.00	0.00	0.00	0.00
65	SAGBEND	-218.70	-34.45	6.13	318.85	0.000	0.000	82.46	0.00	0.00	0.00	0.00	0.00
66	SAGBEND	-224.72	-35.09	6.12	324.90	0.000	0.000	82.46	0.00	0.00	0.00	0.00	0.00
67	SAGBEND	-230.73	-35.74	6.11	330.95	0.000	0.000	82.46	0.00	0.00	0.00	0.00	0.00
68	SAGBEND	-236.75	-36.38	6.10	337.00	0.000	0.000	82.46	0.00	0.00	0.00	0.00	0.00
69	SAGBEND	-242.76	-37.02	6.09	343.05	0.000	0.000	82.46	0.00	0.00	0.00	0.00	0.00
70	SAGBEND	-246.28	-37.40	6.08	346.59	0.000	0.000	82.46	0.00	0.00	0.00	0.00	0.00
71	SAGBEND	-249.80	-37.77	6.08	350.13	0.000	0.000	82.46	0.00	0.00	0.00	0.00	0.00
72	SAGBEND	-254.80	-38.29	5.75	355.14	0.000	0.000	82.41	0.00	0.00	0.00	0.00	0.00
73	SAGBEND	-260.82	-38.87	5.35	361.19	0.000	0.000	82.35	0.00	0.00	0.00	0.00	0.00
74	SAGBEND	-266.84	-39.42	4.96	367.24	0.000	0.000	82.30	0.00	0.00	0.00	0.00	0.00
75	SAGBEND	-272.87	-39.92	4.56	373.29	0.000	0.000	82.25	0.00	0.00	0.00	0.00	0.00
76	SAGBEND	-278.90	-40.38	4.16	379.34	0.000	0.000	82.21	0.00	0.00	0.00	0.00	0.00
77	SAGBEND	-284.94	-40.80	3.76	385.39	0.000	0.000	82.17	0.00	0.00	0.00	0.00	0.00
78	SAGBEND	-290.98	-41.17	3.37	391.44	0.000	0.000	82.13	0.00	0.00	0.00	0.00	0.00
79	SAGBEND	-297.02	-41.51	2.97	397.49	0.000	0.000	82.10	0.00	0.00	0.00	0.00	0.00
80	SAGBEND	-303.06	-41.80	2.57	403.54	0.000	0.000	82.07	0.00	0.00	0.00	0.00	0.00
81	SAGBEND	-309.10	-42.05	2.17	409.59	0.000	0.000	82.05	0.00	0.00	0.00	0.00	0.00
82	SAGBEND	-315.15	-42.26	1.77	415.64	0.000	0.000	82.03	0.00	0.00	0.00	0.00	0.00
83	SAGBEND	-321.20	-42.42	1.37	421.69	0.000	0.000	82.02	0.00	0.00	0.00	0.00	0.00
84	SAGBEND	-327.24	-42.55	0.97	427.74	0.000	0.000	82.00	0.00	0.00	0.00	0.00	0.00
85	SAGBEND	-333.29	-42.63	0.57	433.79	0.000	0.000	82.00	0.00	0.00	0.00	0.00	0.00
86	SAGBEND	-339.34	-42.67	0.17	439.84	0.103	0.000	81.99	0.00	0.00	0.00	0.00	0.00
87	SEABED	-345.39	-42.67	0.01	445.89	0.510	0.000	81.99	0.01	0.00	0.00	0.00	0.00
88	SEABED	-351.44	-42.67	0.00	451.94	0.570	0.000	81.99	0.00	0.00	0.00	0.00	0.00
89	SEABED	-357.49	-42.67	0.00	457.99	0.572	0.000	81.99	0.00	0.00	0.00	0.00	0.00
90	SEABED	-363.54	-42.67	0.00	464.04	0.572	0.000	81.99	0.00	0.00	0.00	0.00	0.00
91	SEABED	-369.59	-42.67	0.00	470.09	0.572	0.000	81.99	0.00	0.00	0.00	0.00	0.00
92	SEABED	-375.64	-42.67	0.00	476.14	0.572	0.000	81.99	0.00	0.00	0.00	0.00	0.00
93	SEABED	-381.69	-42.67	0.00	482.19	0.572	0.000	81.99	0.00	0.00	0.00	0.00	0.00
94	SEABED	-387.74	-42.67	0.00	488.24	0.572	0.000	81.99	0.00	0.00	0.00	0.00	0.00

95	SEABED	-393.79	-42.67	0.00	494.29	0.572	0.000	81.99	0.00	0.00	0.00	0.00	0.00
96	SEABED	-399.84	-42.67	0.00	500.33	0.572	0.000	81.99	0.00	0.00	0.00	0.00	0.00
97	SEABED	-405.89	-42.67	0.00	506.38	0.572	0.000	81.99	0.00	0.00	0.00	0.00	0.00
98	SEABED	-411.94	-42.67	0.00	512.43	0.572	0.000	81.99	0.00	0.00	0.00	0.00	0.00
99	SEABED	-417.99	-42.67	0.00	518.48	0.572	0.000	81.99	0.00	0.00	0.00	0.00	0.00
100	SEABED	-424.04	-42.67	0.00	524.53	0.572	0.000	81.99	0.00	0.00	0.00	0.00	0.00
101	SEABED	-430.09	-42.67	0.00	530.58	0.572	0.000	81.99	0.00	0.00	0.00	0.00	0.00
102	SEABED	-436.14	-42.67	0.00	536.63	0.572	0.000	81.99	0.00	0.00	0.00	0.00	0.00
103	SEABED	-442.19	-42.67	0.00	542.68	0.572	0.000	81.99	0.00	0.00	0.00	0.00	0.00
104	SEABED	-448.24	-42.67	0.00	548.73	0.572	0.000	81.99	0.00	0.00	0.00	0.00	0.00

S T A T I C P I P E C O O R D I N A T E S, F O R C E S A N D S T R E S S E S

NODE NO.	PIPE SECTION	X COORD (M)	Y COORD (M)	VERT ANGLE (DEG)	PIPE LENGTH (M)	SUPPORT REACTION (KN)	SEPARA -TION (M)	AXIAL TENSION (KN)	BENDING MOMENT (KN-M)	TENSILE STRESS (MPA)	BENDING STRESS (MPA)	TOTAL STRESS (MPA)	PERCNT YIELD (PCT)
105	SEABED	-454.29	-42.67	0.00	554.78	0.572	0.000	81.99	0.00	0.00	0.00	0.00	0.00
106	SEABED	-460.34	-42.67	0.00	560.83	0.572	0.000	81.99	0.00	0.00	0.00	0.00	0.00
107	SEABED	-466.38	-42.67	0.00	566.88	0.572	0.000	81.99	0.00	0.00	0.00	0.00	0.00
108	SEABED	-472.43	-42.67	0.00	572.93	0.572	0.000	81.99	0.00	0.00	0.00	0.00	0.00
109	SEABED	-478.48	-42.67	0.00	578.98	0.572	0.000	81.99	0.00	0.00	0.00	0.00	0.00
110	SEABED	-484.53	-42.67	0.00	585.03	0.572	0.000	81.99	0.00	0.00	0.00	0.00	0.00
111	SEABED	-490.58	-42.67	0.00	591.08	0.572	0.000	81.99	0.00	0.00	0.00	0.00	0.00
112	SEABED	-496.63	-42.67	0.00	597.13	0.572	0.000	81.99	0.00	0.00	0.00	0.00	0.00
113	SEABED	-502.68	-42.67	0.00	603.18	0.572	0.000	81.99	0.00	0.00	0.00	0.00	0.00
114	SEABED	-508.73	-42.67	0.00	609.23	0.572	0.000	81.99	0.00	0.00	0.00	0.00	0.00
115	SEABED	-514.78	-42.67	0.00	615.28	0.572	0.000	81.99	0.00	0.00	0.00	0.00	0.00
116	SEABED	-520.83	-42.67	0.00	621.33	0.572	0.000	81.99	0.00	0.00	0.00	0.00	0.00
117	SEABED	-526.88	-42.67	0.00	627.38	0.572	0.000	81.99	0.00	0.00	0.00	0.00	0.00
118	SEABED	-532.93	-42.67	0.00	633.43	0.572	0.000	81.99	0.00	0.00	0.00	0.00	0.00
119	SEABED	-538.98	-42.67	0.00	639.48	0.572	0.000	81.99	0.00	0.00	0.00	0.00	0.00
120	SEABED	-545.03	-42.67	0.00	645.53	0.572	0.000	81.99	0.00	0.00	0.00	0.00	0.00
121	SEABED	-551.08	-42.67	0.00	651.57	0.572	0.000	81.99	0.00	0.00	0.00	0.00	0.00
122	SEABED	-557.13	-42.67	0.00	657.62	0.572	0.000	81.99	0.00	0.00	0.00	0.00	0.00
123	SEABED	-563.18	-42.67	0.00	663.67	0.572	0.000	81.99	0.00	0.00	0.00	0.00	0.00
124	SEABED	-569.23	-42.67	0.00	669.72	0.572	0.000	81.99	0.00	0.00	0.00	0.00	0.00
125	SEABED	-575.28	-42.67	0.00	675.77	0.572	0.000	81.99	0.00	0.00	0.00	0.00	0.00
126	SEABED	-581.33	-42.67	0.00	681.82	0.572	0.000	81.99	0.00	0.00	0.00	0.00	0.00
127	SEABED	-587.38	-42.67	0.00	687.87	0.572	0.000	81.99	0.00	0.00	0.00	0.00	0.00
128	SEABED	-593.43	-42.67	0.00	693.92	0.572	0.000	81.99	0.00	0.00	0.00	0.00	0.00
129	SEABED	-599.48	-42.67	0.00	699.97	0.572	0.000	81.99	0.00	0.00	0.00	0.00	0.00
130	SEABED	-605.53	-42.67	0.00	706.02	0.572	0.000	81.99	0.00	0.00	0.00	0.00	0.00
131	SEABED	-611.58	-42.67	0.00	712.07	0.572	0.000	81.99	0.00	0.00	0.00	0.00	0.00
132	SEABED	-617.62	-42.67	0.00	718.12	0.572	0.000	81.99	0.00	0.00	0.00	0.00	0.00
133	SEABED	-623.67	-42.67	0.00	724.17	0.572	0.000	81.99	0.00	0.00	0.00	0.00	0.00
134	SEABED	-629.72	-42.67	0.00	730.22	0.572	0.000	81.99	0.00	0.00	0.00	0.00	0.00
135	SEABED	-635.77	-42.67	0.00	736.27	0.572	0.000	81.99	0.00	0.00	0.00	0.00	0.00
136	SEABED	-641.82	-42.67	0.00	742.32	0.464	0.000	81.99	0.00	0.00	0.00	0.00	0.00
137	SEABED	-645.71	-42.67	-0.01	746.21	0.314	0.000	81.99	0.00	0.00	0.00	0.00	0.00
138	SEABED	-649.60	-42.67	-0.11	750.10	0.000	0.000	81.99	0.00	0.00	0.00	0.00	0.00

S T A T I C P I P E C O O R D I N A T E S, F O R C E S A N D S T R E S S E S

NODE NO.	PIPE SECTION	X COORD (M)	Y COORD (M)	VERT ANGLE (DEG)	PIPE LENGTH (M)	SUPPORT REACTION (KN)	SEPARA -TION (M)	AXIAL TENSION (KN)	BENDING MOMENT (KN-M)	TENSILE STRESS (MPA)	BENDING STRESS (MPA)	TOTAL STRESS (MPA)	PERCNT YIELD (PCT)
1	LAYBARGE	96.31	6.41	1.93	0.00	9.950	0.000	0.00	2.75	0.00	4.26	4.26	1.18
3	LAYBARGE	84.28	6.05	1.58	12.04	24.023	0.000	-0.73	-19.02	-0.07	-29.44	29.51	8.20
5	LAYBARGE	73.45	5.73	1.91	22.87	24.804	0.000	-1.40	-30.25	-0.13	-46.83	46.96	13.04
7	TENSIONR	60.11	5.24	2.27	36.23	30.693	0.000	214.62	-21.12	20.67	-32.70	53.36	14.82
9	LAYBARGE	51.10	4.87	2.21	45.24	0.000	0.000	213.90	22.69	20.60	35.13	55.72	15.48
10	LAYBARGE	46.45	4.70	2.05	49.89	16.584	0.000	213.57	2.48	20.56	3.84	24.40	6.78
12	LAYBARGE	35.36	4.31	2.16	60.99	17.123	0.000	212.74	-35.42	20.48	-54.83	75.32	20.92
14	LAYBARGE	23.34	3.62	5.34	73.04	71.795	0.000	210.24	-209.44	20.24	-324.24	344.49	95.69
16	LAYBARGE	19.27	3.17	7.05	77.13	0.000	0.000	210.25	-108.42	20.24	-167.86	188.10	52.25
17	LAYBARGE	8.90	1.76	8.03	87.60	18.304	0.000	207.67	-2.15	20.00	-3.33	23.33	6.48
19	LAYBARGE	4.90	1.20	7.82	91.63	0.000	0.000	206.50	44.49	19.88	68.88	88.76	24.66
20	LAYBARGE	3.07	0.95	7.57	93.47	0.000	0.334	205.97	59.11	19.83	91.51	111.34	30.93
24	STINGER	-7.59	-0.28	5.56	104.21	0.000	0.403	203.76	65.85	19.60	101.94	121.56	33.77
26	STINGER	-16.69	-1.08	4.75	113.34	1.081	0.000	203.06	-5.70	19.49	-8.82	28.37	7.88
29	STINGER	-26.46	-1.99	6.70	123.15	52.429	0.000	201.45	-176.04	19.28	-272.53	291.93	81.09
31	STINGER	-37.28	-3.55	8.90	134.09	1.289	0.000	200.59	-14.27	19.11	-22.10	41.40	11.50
33	STINGER	-40.28	-4.02	8.93	137.12	0.000	0.412	200.12	5.65	19.04	8.74	28.00	7.78
35	SAGBEND	-46.48	-4.98	8.67	143.40	0.000	0.000	199.15	20.47	18.89	31.69	50.85	14.13
36	SAGBEND	-49.80	-5.48	8.51	146.76	0.000	0.000	198.65	15.11	18.82	23.39	42.51	11.81
37	SAGBEND	-53.13	-5.98	8.44	150.13	0.000	0.000	198.16	0.00	18.74	0.00	19.07	5.30
38	SAGBEND	-58.46	-6.61	6.69	155.50	0.000	0.000	198.25	0.00	0.00	0.00	0.00	0.00
39	SAGBEND	-64.47	-7.31	6.68	161.55	0.000	0.000	198.25	0.00	0.00	0.00	0.00	0.00
40	SAGBEND	-70.48	-8.01	6.68	167.60	0.000	0.000	198.25	0.00	0.00	0.00	0.00	0.00
41	SAGBEND	-76.49	-8.72	6.67	173.65	0.000	0.000	198.25	0.00	0.00	0.00	0.00	0.00
42	SAGBEND	-82.50	-9.42	6.67	179.70	0.000	0.000	198.25	0.00	0.00	0.00	0.00	0.00
43	SAGBEND	-88.51	-10.12	6.66	185.75	0.000	0.000	198.25	0.00	0.00	0.00	0.00	0.00
44	SAGBEND	-94.52	-10.82	6.66	191.80	0.000	0.000	198.24	0.00	0.00	0.00	0.00	0.00
45	SAGBEND	-100.53	-11.52	6.65	197.85	0.000	0.000	198.24	0.00	0.00	0.00	0.00	0.00
46	SAGBEND	-106.54	-12.22	6.65	203.90	0.000	0.000	198.24	0.00	0.00	0.00	0.00	0.00
47	SAGBEND	-112.55	-12.92	6.64	209.95	0.000	0.000	198.24	0.00	0.00	0.00	0.00	0.00
48	SAGBEND	-118.56	-13.62	6.64	216.00	0.000	0.000	198.24	0.00	0.00	0.00	0.00	0.00
49	SAGBEND	-124.57	-14.32	6.64	222.05	0.000	0.000	198.23	0.00	0.00	0.00	0.00	0.00
50	SAGBEND	-130.58	-15.02	6.63	228.10	0.000	0.000	198.23	0.00	0.00	0.00	0.00	0.00
51	SAGBEND	-136.59	-15.72	6.63	234.15	0.000	0.000	198.23	0.00	0.00	0.00	0.00	0.00
52	SAGBEND	-142.59	-16.42	6.62	240.20	0.000	0.000	198.23	0.00	0.00	0.00	0.00	0.00
53	SAGBEND	-148.60	-17.12	6.62	246.25	0.000	0.000	198.23	0.00	0.00	0.00	0.00	0.00
54	SAGBEND	-154.61	-17.81	6.61	252.30	0.000	0.000	198.23	0.00	0.00	0.00	0.00	0.00
55	SAGBEND	-160.62	-18.51	6.61	258.35	0.000	0.000	198.22	0.00	0.00	0.00	0.00	0.00
56	SAGBEND	-166.63	-19.21	6.60	264.40	0.000	0.000	198.22	0.00	0.00	0.00	0.00	0.00
57	SAGBEND	-172.64	-19.90	6.60	270.45	0.000	0.000	198.22	0.00	0.00	0.00	0.00	0.00
58	SAGBEND	-178.65	-20.60	6.59	276.50	0.000	0.000	198.22	0.00	0.00	0.00	0.00	0.00
59	SAGBEND	-184.66	-21.29	6.59	282.55	0.000	0.000	198.22	0.00	0.00	0.00	0.00	0.00
60	SAGBEND	-190.67	-21.99	6.59	288.60	0.000	0.000	198.21	0.00	0.00	0.00	0.00	0.00

S T A T I C P I P E C O O R D I N A T E S, F O R C E S A N D S T R E S S E S

NODE NO.	PIPE SECTION	X COORD (M)	Y COORD (M)	VERT ANGLE (DEG)	PIPE LENGTH (M)	SUPPORT REACTION (KN)	SEPARA -TION (M)	AXIAL TENSION (KN)	BENDING MOMENT (KN-M)	TENSILE STRESS (MPA)	BENDING STRESS (MPA)	TOTAL STRESS (MPA)	PERCNT YIELD (PCT)
61	SAGBEND	-196.68	-22.68	6.58	294.65	0.000	0.000	198.21	0.00	0.00	0.00	0.00	0.00
62	SAGBEND	-202.69	-23.37	6.58	300.70	0.000	0.000	198.21	0.00	0.00	0.00	0.00	0.00
63	SAGBEND	-208.70	-24.06	6.57	306.75	0.000	0.000	198.21	0.00	0.00	0.00	0.00	0.00
64	SAGBEND	-214.71	-24.76	6.57	312.80	0.000	0.000	198.21	0.00	0.00	0.00	0.00	0.00
65	SAGBEND	-220.73	-25.45	6.56	318.85	0.000	0.000	198.21	0.00	0.00	0.00	0.00	0.00
66	SAGBEND	-226.74	-26.14	6.56	324.90	0.000	0.000	198.20	0.00	0.00	0.00	0.00	0.00
67	SAGBEND	-232.75	-26.83	6.55	330.95	0.000	0.000	198.20	0.00	0.00	0.00	0.00	0.00
68	SAGBEND	-238.76	-27.52	6.55	337.00	0.000	0.000	198.20	0.00	0.00	0.00	0.00	0.00
69	SAGBEND	-244.77	-28.21	6.54	343.05	0.000	0.000	198.20	0.00	0.00	0.00	0.00	0.00
70	SAGBEND	-248.28	-28.61	6.54	346.59	0.000	0.000	198.20	0.00	0.00	0.00	0.00	0.00
71	SAGBEND	-251.80	-29.02	6.54	350.13	0.000	0.000	198.20	0.00	0.00	0.00	0.00	0.00
72	SAGBEND	-256.79	-29.58	6.40	355.15	0.000	0.000	198.14	0.00	0.00	0.00	0.00	0.00
73	SAGBEND	-262.80	-30.25	6.24	361.20	0.000	0.000	198.08	0.00	0.00	0.00	0.00	0.00
74	SAGBEND	-268.82	-30.90	6.07	367.25	0.000	0.000	198.02	0.00	0.00	0.00	0.00	0.00
75	SAGBEND	-274.83	-31.53	5.91	373.30	0.000	0.000	197.96	0.00	0.00	0.00	0.00	0.00
76	SAGBEND	-280.85	-32.14	5.75	379.35	0.000	0.000	197.90	0.00	0.00	0.00	0.00	0.00
77	SAGBEND	-286.87	-32.74	5.58	385.40	0.000	0.000	197.84	0.00	0.00	0.00	0.00	0.00
78	SAGBEND	-292.90	-33.32	5.42	391.45	0.000	0.000	197.79	0.00	0.00	0.00	0.00	0.00
79	SAGBEND	-298.92	-33.88	5.25	397.50	0.000	0.000	197.74	0.00	0.00	0.00	0.00	0.00
80	SAGBEND	-304.95	-34.43	5.09	403.55	0.000	0.000	197.69	0.00	0.00	0.00	0.00	0.00
81	SAGBEND	-310.97	-34.96	4.92	409.60	0.000	0.000	197.64	0.00	0.00	0.00	0.00	0.00
82	SAGBEND	-317.00	-35.47	4.76	415.65	0.000	0.000	197.59	0.00	0.00	0.00	0.00	0.00
83	SAGBEND	-323.03	-35.96	4.59	421.70	0.000	0.000	197.54	0.00	0.00	0.00	0.00	0.00
84	SAGBEND	-329.06	-36.44	4.43	427.75	0.000	0.000	197.50	0.00	0.00	0.00	0.00	0.00
85	SAGBEND	-335.10	-36.89	4.26	433.80	0.000	0.000	197.45	0.00	0.00	0.00	0.00	0.00
86	SAGBEND	-341.13	-37.33	4.10	439.85	0.000	0.000	197.41	0.00	0.00	0.00	0.00	0.00
87	SAGBEND	-347.16	-37.76	3.93	445.90	0.000	0.000	197.37	0.00	0.00	0.00	0.00	0.00
88	SAGBEND	-353.20	-38.16	3.76	451.95	0.000	0.000	197.33	0.00	0.00	0.00	0.00	0.00
89	SAGBEND	-359.24	-38.55	3.60	458.00	0.000	0.000	197.30	0.00	0.00	0.00	0.00	0.00
90	SAGBEND	-365.28	-38.92	3.43	464.05	0.000	0.000	197.26	0.00	0.00	0.00	0.00	0.00
91	SAGBEND	-371.32	-39.28	3.27	470.10	0.000	0.000	197.23	0.00	0.00	0.00	0.00	0.00
92	SAGBEND	-377.36	-39.61	3.10	476.15	0.000	0.000	197.20	0.00	0.00	0.00	0.00	0.00
93	SAGBEND	-383.40	-39.93	2.94	482.20	0.000	0.000	197.17	0.00	0.00	0.00	0.00	0.00
94	SAGBEND	-389.44	-40.23	2.77	488.25	0.000	0.000	197.14	0.00	0.00	0.00	0.00	0.00
95	SAGBEND	-395.48	-40.52	2.60	494.30	0.000	0.000	197.11	0.00	0.00	0.00	0.00	0.00
96	SAGBEND	-401.53	-40.78	2.44	500.35	0.000	0.000	197.09	0.00	0.00	0.00	0.00	0.00
97	SAGBEND	-407.57	-41.03	2.27	506.40	0.000	0.000	197.06	0.00	0.00	0.00	0.00	0.00
98	SAGBEND	-413.62	-41.26	2.11	512.45	0.000	0.000	197.04	0.00	0.00	0.00	0.00	0.00
99	SAGBEND	-419.67	-41.48	1.94	518.50	0.000	0.000	197.02	0.00	0.00	0.00	0.00	0.00
100	SAGBEND	-425.71	-41.67	1.77	524.55	0.000	0.000	197.00	0.00	0.00	0.00	0.00	0.00
101	SAGBEND	-431.76	-41.85	1.61	530.60	0.000	0.000	196.98	0.00	0.00	0.00	0.00	0.00

102	SAGBEND	-437.81	-42.01	1.44	536.65	0.000	0.000	196.97	0.00	0.00	0.00	0.00	0.00
103	SAGBEND	-443.86	-42.15	1.28	542.70	0.000	0.000	196.96	0.00	0.00	0.00	0.00	0.00
104	SAGBEND	-449.91	-42.28	1.11	548.75	0.000	0.000	196.94	0.00	0.00	0.00	0.00	0.00
105	SAGBEND	-455.95	-42.39	0.94	554.80	0.000	0.000	196.93	0.00	0.00	0.00	0.00	0.00

S T A T I C P I P E C O O R D I N A T E S, F O R C E S A N D S T R E S S E S

NODE NO.	PIPE SECTION	X COORD (M)	Y COORD (M)	VERT ANGLE (DEG)	PIPE LENGTH (M)	SUPPORT REACTION (KN)	SEPARA -TION (M)	AXIAL TENSION (KN)	BENDING MOMENT (KN-M)	TENSILE STRESS (MPA)	BENDING STRESS (MPA)	TOTAL STRESS (MPA)	PERCNT YIELD (PCT)
106	SAGBEND	-462.00	-42.48	0.78	560.85	0.000	0.000	196.92	0.00	0.00	0.00	0.00	0.00
107	SAGBEND	-468.05	-42.55	0.61	566.90	0.000	0.000	196.92	0.00	0.00	0.00	0.00	0.00
108	SAGBEND	-474.10	-42.61	0.44	572.95	0.000	0.000	196.91	0.00	0.00	0.00	0.00	0.00
109	SAGBEND	-480.15	-42.65	0.28	579.00	0.000	0.000	196.91	0.00	0.00	0.00	0.00	0.00
110	SAGBEND	-486.20	-42.67	0.11	585.05	0.056	0.000	196.91	0.00	0.00	0.00	0.00	0.00
111	SEABED	-492.25	-42.67	0.01	591.10	0.432	0.000	196.91	0.00	0.00	0.00	0.00	0.00
112	SEABED	-498.30	-42.67	0.00	597.15	0.557	0.000	196.91	0.00	0.00	0.00	0.00	0.00
113	SEABED	-504.35	-42.67	0.00	603.20	0.570	0.000	196.91	0.00	0.00	0.00	0.00	0.00
114	SEABED	-510.40	-42.67	0.00	609.25	0.571	0.000	196.91	0.00	0.00	0.00	0.00	0.00
115	SEABED	-516.45	-42.67	0.00	615.30	0.571	0.000	196.91	0.00	0.00	0.00	0.00	0.00
116	SEABED	-522.50	-42.67	0.00	621.35	0.571	0.000	196.91	0.00	0.00	0.00	0.00	0.00
117	SEABED	-528.55	-42.67	0.00	627.40	0.571	0.000	196.91	0.00	0.00	0.00	0.00	0.00
118	SEABED	-534.60	-42.67	0.00	633.45	0.571	0.000	196.91	0.00	0.00	0.00	0.00	0.00
119	SEABED	-540.65	-42.67	0.00	639.50	0.571	0.000	196.91	0.00	0.00	0.00	0.00	0.00
120	SEABED	-546.70	-42.67	0.00	645.55	0.571	0.000	196.91	0.00	0.00	0.00	0.00	0.00
121	SEABED	-552.75	-42.67	0.00	651.60	0.571	0.000	196.91	0.00	0.00	0.00	0.00	0.00
122	SEABED	-558.80	-42.67	0.00	657.65	0.571	0.000	196.91	0.00	0.00	0.00	0.00	0.00
123	SEABED	-564.85	-42.67	0.00	663.70	0.571	0.000	196.91	0.00	0.00	0.00	0.00	0.00
124	SEABED	-570.90	-42.67	0.00	669.75	0.571	0.000	196.91	0.00	0.00	0.00	0.00	0.00
125	SEABED	-576.95	-42.67	0.00	675.80	0.571	0.000	196.91	0.00	0.00	0.00	0.00	0.00
126	SEABED	-583.00	-42.67	0.00	681.85	0.571	0.000	196.91	0.00	0.00	0.00	0.00	0.00
127	SEABED	-589.05	-42.67	0.00	687.90	0.571	0.000	196.91	0.00	0.00	0.00	0.00	0.00
128	SEABED	-595.10	-42.67	0.00	693.95	0.571	0.000	196.91	0.00	0.00	0.00	0.00	0.00
129	SEABED	-601.15	-42.67	0.00	700.00	0.571	0.000	196.91	0.00	0.00	0.00	0.00	0.00
130	SEABED	-607.20	-42.67	0.00	706.05	0.571	0.000	196.91	0.00	0.00	0.00	0.00	0.00
131	SEABED	-613.25	-42.67	0.00	712.10	0.571	0.000	196.91	0.00	0.00	0.00	0.00	0.00
132	SEABED	-619.30	-42.67	0.00	718.15	0.571	0.000	196.91	0.00	0.00	0.00	0.00	0.00
133	SEABED	-625.35	-42.67	0.00	724.20	0.571	0.000	196.91	0.00	0.00	0.00	0.00	0.00
134	SEABED	-631.40	-42.67	0.00	730.25	0.571	0.000	196.91	0.00	0.00	0.00	0.00	0.00
135	SEABED	-637.45	-42.67	0.00	736.30	0.567	0.000	196.91	0.00	0.00	0.00	0.00	0.00
136	SEABED	-643.50	-42.67	0.00	742.35	0.444	0.000	196.91	0.00	0.00	0.00	0.00	0.00
137	SEABED	-647.39	-42.67	-0.02	746.24	0.269	0.000	196.91	0.00	0.00	0.00	0.00	0.00
138	SEABED	-651.29	-42.67	-0.07	750.13	0.000	0.000	196.91	0.00	0.00	0.00	0.00	0.00

S T A T I C P I P E C O O R D I N A T E S, F O R C E S A N D S T R E S S E S

NODE NO.	PIPE SECTION	X COORD (M)	Y COORD (M)	VERT ANGLE (DEG)	PIPE LENGTH (M)	SUPPORT REACTION (KN)	SEPARA -TION (M)	AXIAL TENSION (KN)	BENDING MOMENT (KN-M)	TENSILE STRESS (MPA)	BENDING STRESS (MPA)	TOTAL STRESS (MPA)	PERCNT YIELD (PCT)
1	LAYBARGE	96.31	6.41	1.93	0.00	9.946	0.000	0.00	2.75	0.00	4.25	4.25	1.18
3	LAYBARGE	84.28	6.05	1.58	12.04	24.046	0.000	-0.73	-19.05	-0.07	-29.50	29.57	8.21
5	LAYBARGE	73.45	5.73	1.91	22.87	24.726	0.000	-1.39	-30.09	-0.13	-46.59	46.72	12.98
7	TENSIONR	60.11	5.24	2.28	36.23	30.957	0.000	214.63	-21.52	20.67	-33.32	53.99	15.00
9	LAYBARGE	51.10	4.87	2.21	45.24	0.000	0.000	213.91	23.96	20.60	37.09	57.68	16.02
10	LAYBARGE	46.45	4.70	2.02	49.89	15.131	0.000	213.59	4.60	20.57	7.12	27.69	7.69
12	LAYBARGE	35.36	4.31	2.25	60.99	22.882	0.000	212.73	-42.20	20.48	-65.34	85.82	23.84
14	LAYBARGE	23.34	3.62	4.97	73.04	52.735	0.000	210.65	-171.16	20.28	-264.98	285.26	79.24
16	LAYBARGE	19.27	3.21	6.51	77.13	0.000	0.000	210.29	-116.85	20.25	-180.90	201.15	55.88
17	LAYBARGE	8.90	1.76	9.67	87.60	18.441	0.000	207.00	-170.24	19.93	-263.55	283.49	78.75
19	LAYBARGE	4.93	1.01	11.67	91.64	0.000	0.000	205.10	-220.55	19.75	-341.45	361.20	100.33
20	LAYBARGE	3.12	0.62	12.81	93.49	52.576	0.000	203.86	-261.33	19.63	-404.58	424.21	117.84
24	STINGER	-7.50	-2.35	17.95	104.52	20.701	0.000	201.25	-157.29	19.24	-243.51	262.88	73.02
26	STINGER	-16.13	-5.39	20.66	113.67	8.340	0.000	198.54	-101.01	18.81	-156.38	175.49	48.75
29	STINGER	-25.28	-9.06	23.20	123.53	31.057	0.000	194.72	-129.26	18.24	-200.11	218.84	60.79
31	STINGER	-35.25	-13.56	24.85	134.46	8.013	0.000	190.60	-15.93	17.58	-24.66	42.99	11.94
33	STINGER	-37.97	-14.82	24.85	137.46	0.000	0.421	189.34	14.34	17.39	22.20	40.42	11.23
35	SAGBEND	-43.36	-17.29	24.29	143.40	0.000	0.000	186.81	55.18	17.01	85.42	103.37	28.72
36	SAGBEND	-48.90	-19.73	23.23	149.45	0.000	0.000	184.30	80.14	16.63	124.07	141.78	39.38
37	SAGBEND	-54.48	-22.05	21.86	155.50	0.000	0.000	181.92	95.44	16.27	147.76	165.23	45.90
38	SAGBEND	-60.13	-24.23	20.30	161.55	0.000	0.000	179.70	105.10	15.93	162.71	179.96	49.99
39	SAGBEND	-65.83	-26.25	18.61	167.60	0.000	0.000	177.66	111.31	15.62	172.32	189.38	52.60
40	SAGBEND	-71.60	-28.09	16.86	173.65	0.000	0.000	175.80	115.20	15.34	178.35	195.22	54.23
41	SAGBEND	-77.41	-29.75	15.05	179.70	0.000	0.000	174.12	117.23	15.08	181.49	198.20	55.06
42	SAGBEND	-83.28	-31.23	13.23	185.75	0.000	0.000	172.65	117.34	14.85	181.67	198.23	55.06
43	SAGBEND	-89.19	-32.52	11.42	191.80	0.000	0.000	171.37	114.99	14.66	178.03	194.47	54.02
44	SAGBEND	-95.14	-33.63	9.68	197.85	0.000	0.000	170.29	109.00	14.49	168.75	185.09	51.41
45	SAGBEND	-101.11	-34.56	8.07	203.90	0.000	0.000	169.42	97.25	14.35	150.56	166.81	46.34
46	SAGBEND	-107.11	-35.34	6.71	209.95	0.000	0.000	168.72	76.07	14.24	117.77	133.97	37.21
47	SAGBEND	-113.13	-35.99	5.79	216.00	0.000	0.000	168.17	39.26	14.15	60.79	76.96	21.38
48	SAGBEND	-117.24	-36.40	5.57	220.13	0.000	0.000	167.79	0.00	14.09	0.00	16.42	4.56
49	SAGBEND	-121.22	-36.51	1.70	224.11	0.000	0.000	168.18	0.00	0.00	0.00	0.00	0.00
50	SAGBEND	-125.20	-36.63	1.70	228.10	0.000	0.000	168.18	0.00	0.00	0.00	0.00	0.00
51	SAGBEND	-131.25	-36.81	1.69	234.15	0.000	0.000	168.18	0.00	0.00	0.00	0.00	0.00
52	SAGBEND	-137.30	-36.99	1.69	240.19	0.000	0.000	168.18	0.00	0.00	0.00	0.00	0.00
53	SAGBEND	-143.34	-37.17	1.68	246.24	0.000	0.000	168.17	0.00	0.00	0.00	0.00	0.00
54	SAGBEND	-149.39	-37.35	1.68	252.29	0.000	0.000	168.17	0.00	0.00	0.00	0.00	0.00
55	SAGBEND	-155.44	-37.52	1.67	258.34	0.000	0.000	168.17	0.00	0.00	0.00	0.00	0.00
56	SAGBEND	-161.49	-37.70	1.67	264.39	0.000	0.000	168.17	0.00	0.00	0.00	0.00	0.00
57	SAGBEND	-167.53	-37.87	1.66	270.44	0.000	0.000	168.17	0.00	0.00	0.00	0.00	0.00
58	SAGBEND	-173.58	-38.05	1.66	276.49	0.000	0.000	168.17	0.00	0.00	0.00	0.00	0.00
59	SAGBEND	-179.63	-38.22	1.65	282.54	0.000	0.000	168.17	0.00	0.00	0.00	0.00	0.00
60	SAGBEND	-185.67	-38.40	1.65	288.59	0.000	0.000	168.17	0.00	0.00	0.00	0.00	0.00

S T A T I C P I P E C O O R D I N A T E S, F O R C E S A N D S T R E S S E S

NODE NO.	PIPE SECTION	X COORD (M)	Y COORD (M)	VERT ANGLE (DEG)	PIPE LENGTH (M)	SUPPORT REACTION (KN)	SEPARA -TION (M)	AXIAL TENSION (KN)	BENDING MOMENT (KN-M)	TENSILE STRESS (MPA)	BENDING STRESS (MPA)	TOTAL STRESS (MPA)	PERCNT YIELD (PCT)
61	SAGBEND	-191.72	-38.57	1.64	294.64	0.000	0.000	168.17	0.00	0.00	0.00	0.00	0.00
62	SAGBEND	-197.77	-38.74	1.63	300.69	0.000	0.000	168.17	0.00	0.00	0.00	0.00	0.00
63	SAGBEND	-203.81	-38.92	1.63	306.74	0.000	0.000	168.17	0.00	0.00	0.00	0.00	0.00
64	SAGBEND	-209.86	-39.09	1.62	312.79	0.000	0.000	168.17	0.00	0.00	0.00	0.00	0.00
65	SAGBEND	-215.91	-39.26	1.62	318.84	0.000	0.000	168.17	0.00	0.00	0.00	0.00	0.00
66	SAGBEND	-221.96	-39.43	1.61	324.89	0.000	0.000	168.17	0.00	0.00	0.00	0.00	0.00
67	SAGBEND	-228.00	-39.60	1.61	330.94	0.000	0.000	168.17	0.00	0.00	0.00	0.00	0.00
68	SAGBEND	-234.05	-39.77	1.60	336.99	0.000	0.000	168.17	0.00	0.00	0.00	0.00	0.00
69	SAGBEND	-240.10	-39.94	1.60	343.04	0.000	0.000	168.17	0.00	0.00	0.00	0.00	0.00
70	SAGBEND	-246.14	-40.11	1.59	349.09	0.000	0.000	168.17	0.00	0.00	0.00	0.00	0.00
71	SAGBEND	-252.19	-40.27	1.59	355.14	0.000	0.000	168.17	0.00	0.00	0.00	0.00	0.00
72	SAGBEND	-258.24	-40.44	1.58	361.18	0.000	0.000	168.17	0.00	0.00	0.00	0.00	0.00
73	SAGBEND	-264.29	-40.61	1.58	367.23	0.000	0.000	168.17	0.00	0.00	0.00	0.00	0.00
74	SAGBEND	-270.33	-40.77	1.57	373.28	0.000	0.000	168.17	0.00	0.00	0.00	0.00	0.00
75	SAGBEND	-276.38	-40.94	1.56	379.33	0.000	0.000	168.17	0.00	0.00	0.00	0.00	0.00
76	SAGBEND	-282.43	-41.10	1.56	385.38	0.000	0.000	168.16	0.00	0.00	0.00	0.00	0.00
77	SAGBEND	-288.47	-41.27	1.55	391.43	0.000	0.000	168.16	0.00	0.00	0.00	0.00	0.00
78	SAGBEND	-294.52	-41.43	1.55	397.48	0.000	0.000	168.16	0.00	0.00	0.00	0.00	0.00
79	SAGBEND	-300.57	-41.59	1.54	403.53	0.000	0.000	168.16	0.00	0.00	0.00	0.00	0.00
80	SAGBEND	-306.62	-41.76	1.54	409.58	0.000	0.000	168.16	0.00	0.00	0.00	0.00	0.00
81	SAGBEND	-312.66	-41.92	1.53	415.63	0.000	0.000	168.16	0.00	0.00	0.00	0.00	0.00
82	SAGBEND	-317.14	-42.04	1.53	420.11	0.000	0.000	168.16	0.00	0.00	0.00	0.00	0.00
83	SAGBEND	-320.95	-42.14	1.41	423.92	0.000	0.000	168.15	0.00	0.00	0.00	0.00	0.00
84	SAGBEND	-324.76	-42.23	1.28	427.73	0.000	0.000	168.14	0.00	0.00	0.00	0.00	0.00
85	SAGBEND	-330.81	-42.35	1.09	433.78	0.000	0.000	168.13	0.00	0.00	0.00	0.00	0.00
86	SAGBEND	-336.85	-42.46	0.89	439.83	0.000	0.000	168.12	0.00	0.00	0.00	0.00	0.00
87	SAGBEND	-342.90	-42.54	0.70	445.88	0.000	0.000	168.11	0.00	0.00	0.00	0.00	0.00
88	SAGBEND	-348.95	-42.60	0.50	451.93	0.000	0.000	168.11	0.00	0.00	0.00	0.00	0.00
89	SAGBEND	-355.00	-42.65	0.31	457.97	0.000	0.000	168.10	0.00	0.00	0.00	0.00	0.00
90	SAGBEND	-361.05	-42.67	0.11	464.02	0.073	0.000	168.10	0.00	0.00	0.00	0.00	0.00
91	SEABED	-367.10	-42.67	0.01	470.07	0.459	0.000	168.10	0.00	0.00	0.00	0.00	0.00
92	SEABED	-373.15	-42.67	0.00	476.12	0.562	0.000	168.10	0.00	0.00	0.00	0.00	0.00
93	SEABED	-379.20	-42.67	0.00	482.17	0.571	0.000	168.10	0.00	0.00	0.00	0.00	0.00
94	SEABED	-385.25	-42.67	0.00	488.22	0.571	0.000	168.10	0.00	0.00	0.00	0.00	0.00
95	SEABED	-391.30	-42.67	0.00	494.27	0.571	0.000	168.10	0.00	0.00	0.00	0.00	0.00
96	SEABED	-397.34	-42.67	0.00	500.32	0.571	0.000	168.10	0.00	0.00	0.00	0.00	0.00
97	SEABED	-403.39	-42.67	0.00	506.37	0.571	0.000	168.10	0.00	0.00	0.00	0.00	0.00
98	SEABED	-409.44	-42.67	0.00	512.42	0.571	0.000	168.10	0.00	0.00	0.00	0.00	0.00
99	SEABED	-415.49	-42.67	0.00	518.47	0.571	0.000	168.10	0.00	0.00	0.00	0.00	0.00
100	SEABED	-421.54	-42.67	0.00	524.52	0.571	0.000	168.10	0.00	0.00	0.00	0.00	0.00
101	SEABED	-427.59	-42.67	0.00	530.56	0.571	0.000	168.10	0.00	0.00	0.00	0.00	0.00
102	SEABED	-433.64	-42.67	0.00	536.61	0.571	0.000	168.10	0.00	0.00	0.00	0.00	0.00
103	SEABED	-439.69	-42.67	0.00	542.66	0.571	0.000	168.10	0.00	0.00	0.00	0.00	0.00
104	SEABED	-445.74	-42.67	0.00	548.71	0.571	0.000	168.10	0.00	0.00	0.00	0.00	0.00

S T A T I C P I P E C O O R D I N A T E S, F O R C E S A N D S T R E S S E S

NODE NO.	PIPE SECTION	X COORD (M)	Y COORD (M)	VERT ANGLE (DEG)	PIPE LENGTH (M)	SUPPORT REACTION (KN)	SEPARA -TION (M)	AXIAL TENSION (KN)	BENDING MOMENT (KN-M)	TENSILE STRESS (MPA)	BENDING STRESS (MPA)	TOTAL STRESS (MPA)	PERCNT YIELD (PCT)
105	SEABED	-451.79	-42.67	0.00	554.76	0.571	0.000	168.10	0.00	0.00	0.00	0.00	0.00
106	SEABED	-457.84	-42.67	0.00	560.81	0.571	0.000	168.10	0.00	0.00	0.00	0.00	0.00
107	SEABED	-463.89	-42.67	0.00	566.86	0.571	0.000	168.10	0.00	0.00	0.00	0.00	0.00
108	SEABED	-469.93	-42.67	0.00	572.91	0.571	0.000	168.10	0.00	0.00	0.00	0.00	0.00
109	SEABED	-475.98	-42.67	0.00	578.96	0.571	0.000	168.10	0.00	0.00	0.00	0.00	0.00
110	SEABED	-482.03	-42.67	0.00	585.01	0.571	0.000	168.10	0.00	0.00	0.00	0.00	0.00
111	SEABED	-488.08	-42.67	0.00	591.06	0.571	0.000	168.10	0.00	0.00	0.00	0.00	0.00
112	SEABED	-494.13	-42.67	0.00	597.11	0.571	0.000	168.10	0.00	0.00	0.00	0.00	0.00
113	SEABED	-500.18	-42.67	0.00	603.16	0.571	0.000	168.10	0.00	0.00	0.00	0.00	0.00
114	SEABED	-506.23	-42.67	0.00	609.20	0.571	0.000	168.10	0.00	0.00	0.00	0.00	0.00
115	SEABED	-512.28	-42.67	0.00	615.25	0.571	0.000	168.10	0.00	0.00	0.00	0.00	0.00
116	SEABED	-518.33	-42.67	0.00	621.30	0.571	0.000	168.10	0.00	0.00	0.00	0.00	0.00
117	SEABED	-524.38	-42.67	0.00	627.35	0.571	0.000	168.10	0.00	0.00	0.00	0.00	0.00
118	SEABED	-530.43	-42.67	0.00	633.40	0.571	0.000	168.10	0.00	0.00	0.00	0.00	0.00
119	SEABED	-536.48	-42.67	0.00	639.45	0.571	0.000	168.10	0.00	0.00	0.00	0.00	0.00
120	SEABED	-542.53	-42.67	0.00	645.50	0.571	0.000	168.10	0.00	0.00	0.00	0.00	0.00
121	SEABED	-548.57	-42.67	0.00	651.55	0.571	0.000	168.10	0.00	0.00	0.00	0.00	0.00
122	SEABED	-554.62	-42.67	0.00	657.60	0.571	0.000	168.10	0.00	0.00	0.00	0.00	0.00
123	SEABED	-560.67	-42.67	0.00	663.65	0.571	0.000	168.10	0.00	0.00	0.00	0.00	0.00
124	SEABED	-566.72	-42.67	0.00	669.70	0.571	0.000	168.10	0.00	0.00	0.00	0.00	0.00
125	SEABED	-572.77	-42.67	0.00	675.75	0.571	0.000	168.10	0.00	0.00	0.00	0.00	0.00
126	SEABED	-578.82	-42.67	0.00	681.79	0.571	0.000	168.10	0.00	0.00	0.00	0.00	0.00
127	SEABED	-584.87	-42.67	0.00	687.84	0.571	0.000	168.10	0.00	0.00	0.00	0.00	0.00
128	SEABED	-590.92	-42.67	0.00	693.89	0.571	0.000	168.10	0.00	0.00	0.00	0.00	0.00
129	SEABED	-596.97	-42.67	0.00	699.94	0.571	0.000	168.10	0.00	0.00	0.00	0.00	0.00
130	SEABED	-603.02	-42.67	0.00	705.99	0.571	0.000	168.10	0.00	0.00	0.00	0.00	0.00
131	SEABED	-609.07	-42.67	0.00	712.04	0.571	0.000	168.10	0.00	0.00	0.00	0.00	0.00
132	SEABED	-615.12	-42.67	0.00	718.09	0.571	0.000	168.10	0.00	0.00	0.00	0.00	0.00
133	SEABED	-621.16	-42.67	0.00	724.14	0.571	0.000	168.10	0.00	0.00	0.00	0.00	0.00
134	SEABED	-627.21	-42.67	0.00	730.19	0.571	0.000	168.10	0.00	0.00	0.00	0.00	0.00
135	SEABED	-633.26	-42.67	0.00	736.24	0.571	0.000	168.10	0.00	0.00	0.00	0.00	0.00
136	SEABED	-639.31	-42.67	0.00	742.29	0.571	0.000	168.10	0.00	0.00	0.00	0.00	0.00
137	SEABED	-645.36	-42.67	0.00	748.34	0.571	0.000	168.10	0.00	0.00	0.00	0.00	0.00
138	SEABED	-651.41	-42.67	0.00	754.38	0.571	0.000	168.10	0.00	0.00	0.00	0.00	0.00
139	SEABED	-657.46	-42.67	0.00	760.43	0.571	0.000	168.10	0.00	0.00	0.00	0.00	0.00
140	SEABED	-663.51	-42.67	0.00	766.48	0.571	0.000	168.10	0.00	0.00	0.00	0.00	0.00
141	SEABED	-669.56	-42.67	0.00	772.53	0.571	0.000	168.10	0.00	0.00	0.00	0.00	0.00
142	SEABED	-675.61	-42.67	0.00	778.58	0.571	0.000	168.10	0.00	0.00	0.00	0.00	0.00
143	SEABED	-681.66	-42.67	0.00	784.63	0.571	0.000	168.10	0.00	0.00	0.00	0.00	0.00
144	SEABED	-687.71	-42.67	0.00	790.68	0.571	0.000	168.10	0.00	0.00	0.00	0.00	0.00
145	SEABED	-693.75	-42.67	0.00	796.73	0.571	0.000	168.10	0.00	0.00	0.00	0.00	0.00
146	SEABED	-699.80	-42.67	0.00	802.78	0.571	0.000	168.10	0.00	0.00	0.00	0.00	0.00
147	SEABED	-705.85	-42.67	0.00	808.83	0.562	0.000	168.10	0.00	0.00	0.00	0.00	0.00
148	SEABED	-711.90	-42.67	-0.01	814.88	0.449	0.000	168.10	0.00	0.00	0.00	0.00	0.00
149	SEABED	-717.08	-42.67	-0.08	820.06	0.000	0.000	168.10	0.00	0.00	0.00	0.00	0.00

S T A T I C P I P E C O O R D I N A T E S, F O R C E S A N D S T R E S S E S

NODE NO.	PIPE SECTION	X COORD (M)	Y COORD (M)	VERT ANGLE (DEG)	PIPE LENGTH (M)	SUPPORT REACTION (KN)	SEPARA -TION (M)	AXIAL TENSION (KN)	BENDING MOMENT (KN-M)	TENSILE STRESS (MPA)	BENDING STRESS (MPA)	TOTAL STRESS (MPA)	PERCNT YIELD (PCT)
1	LAYBARGE	96.31	6.41	1.93	0.00	9.947	0.000	0.00	2.75	0.00	4.25	4.25	1.18
3	LAYBARGE	84.28	6.05	1.58	12.04	24.045	0.000	-0.73	-19.05	-0.07	-29.49	29.56	8.21
5	LAYBARGE	73.45	5.73	1.91	22.87	24.732	0.000	-1.39	-30.11	-0.13	-46.61	46.74	12.98
7	TENSIONR	60.11	5.24	2.28	36.23	30.997	0.000	252.82	-21.45	24.34	-33.20	57.54	15.98
9	LAYBARGE	51.10	4.87	2.21	45.24	0.000	0.000	252.11	23.84	24.27	36.90	61.18	16.99
10	LAYBARGE	46.45	4.70	2.02	49.89	14.654	0.000	251.78	5.12	24.24	7.93	32.17	8.94
12	LAYBARGE	35.36	4.31	2.26	60.99	24.340	0.000	250.92	-43.20	24.16	-66.88	91.04	25.29
14	LAYBARGE	23.34	3.62	4.94	73.04	53.336	0.000	248.86	-168.87	23.96	-261.44	285.40	79.28
16	LAYBARGE	19.27	3.21	6.46	77.13	0.000	0.000	248.49	-116.87	23.93	-180.93	204.86	56.90
17	LAYBARGE	8.90	1.76	9.86	87.60	47.785	0.000	244.99	-185.59	23.59	-287.32	310.91	86.37
19	LAYBARGE	4.93	1.00	11.58	91.64	0.000	0.000	243.90	-143.82	23.48	-222.66	246.15	68.37
20	LAYBARGE	3.12	0.62	12.25	93.49	19.080	0.000	243.17	-137.92	23.41	-213.53	236.94	65.82
24	STINGER	-7.55	-1.95	14.53	104.46	5.989	0.000	240.30	-65.88	23.03	-101.99	125.12	34.76
26	STINGER	-16.37	-4.38	16.43	113.61	25.797	0.000	237.65	-121.17	22.63	-187.59	210.47	58.46
29	STINGER	-25.77	-7.38	18.98	123.48	24.208	0.000	234.69	-112.48	22.18	-174.13	196.71	54.64
31	STINGER	-36.03	-11.12	20.80	134.41	16.764	0.000	231.18	-49.27	21.63	-76.27	98.51	27.36
33	STINGER	-38.84	-12.20	21.04	137.41	0.000	0.404	230.16	-12.36	21.47	-19.14	41.28	11.47
35	SAGBEND	-44.43	-14.34	20.82	143.40	0.000	0.000	227.99	35.46	21.14	54.90	76.83	21.34
36	SAGBEND	-50.10	-16.46	20.04	149.45	0.000	0.000	225.82	62.32	20.81	96.49	118.20	32.83
37	SAGBEND	-55.80	-18.48	18.95	155.50	0.000	0.000	223.75	77.52	20.50	120.02	141.52	39.31
38	SAGBEND	-61.54	-20.38	17.67	161.55	0.000	0.000	221.82	86.35	20.20	133.68	155.00	43.06
39	SAGBEND	-67.33	-22.15	16.29	167.60	0.000	0.000	220.03	91.60	19.93	141.81	162.96	45.27
40	SAGBEND	-73.16	-23.77	14.84	173.65	0.000	0.000	218.40	94.71	19.68	146.62	167.60	46.56
41	SAGBEND	-79.02	-25.25	13.36	179.70	0.000	0.000	216.92	96.31	19.46	149.10	169.93	47.20
42	SAGBEND	-84.93	-26.57	11.86	185.75	0.000	0.000	215.60	96.51	19.25	149.41	170.11	47.25
43	SAGBEND	-90.86	-27.73	10.37	191.80	0.000	0.000	214.44	94.96	19.08	147.01	167.60	46.56
44	SAGBEND	-96.83	-28.75	8.93	197.85	0.000	0.000	213.45	90.72	18.92	140.44	160.94	44.71
45	SAGBEND	-102.82	-29.61	7.58	203.90	0.000	0.000	212.61	81.95	18.79	126.87	147.29	40.91
46	SAGBEND	-108.82	-30.35	6.43	209.95	0.000	0.000	211.94	65.25	18.69	101.02	121.38	33.72
47	SAGBEND	-114.84	-30.98	5.63	216.00	0.000	0.000	211.37	34.48	18.60	53.39	73.72	20.48
48	SAGBEND	-118.95	-31.38	5.43	220.13	0.000	0.000	211.00	0.00	18.54	0.00	20.45	5.68
49	SAGBEND	-122.93	-31.56	2.68	224.11	0.000	0.000	211.25	0.00	0.00	0.00	0.00	0.00
50	SAGBEND	-126.91	-31.75	2.67	228.10	0.000	0.000	211.25	0.00	0.00	0.00	0.00	0.00
51	SAGBEND	-132.95	-32.03	2.67	234.15	0.000	0.000	211.25	0.00	0.00	0.00	0.00	0.00
52	SAGBEND	-139.00	-32.31	2.67	240.20	0.000	0.000	211.25	0.00	0.00	0.00	0.00	0.00
53	SAGBEND	-145.04	-32.59	2.66	246.24	0.000	0.000	211.25	0.00	0.00	0.00	0.00	0.00
54	SAGBEND	-151.08	-32.87	2.66	252.29	0.000	0.000	211.24	0.00	0.00	0.00	0.00	0.00
55	SAGBEND	-157.12	-33.15	2.65	258.34	0.000	0.000	211.24	0.00	0.00	0.00	0.00	0.00
56	SAGBEND	-163.17	-33.43	2.65	264.39	0.000	0.000	211.24	0.00	0.00	0.00	0.00	0.00
57	SAGBEND	-169.21	-33.71	2.64	270.44	0.000	0.000	211.24	0.00	0.00	0.00	0.00	0.00
58	SAGBEND	-175.25	-33.99	2.64	276.49	0.000	0.000	211.24	0.00	0.00	0.00	0.00	0.00
59	SAGBEND	-181.30	-34.27	2.64	282.54	0.000	0.000	211.24	0.00	0.00	0.00	0.00	0.00
60	SAGBEND	-187.34	-34.55	2.63	288.59	0.000	0.000	211.24	0.00	0.00	0.00	0.00	0.00

S T A T I C P I P E C O O R D I N A T E S, F O R C E S A N D S T R E S S E S

NODE NO.	PIPE SECTION	X COORD (M)	Y COORD (M)	VERT ANGLE (DEG)	PIPE LENGTH (M)	SUPPORT REACTION (KN)	SEPARA -TION (M)	AXIAL TENSION (KN)	BENDING MOMENT (KN-M)	TENSILE STRESS (MPA)	BENDING STRESS (MPA)	TOTAL STRESS (MPA)	PERCNT YIELD (PCT)
61	SAGBEND	-193.38	-34.83	2.63	294.64	0.000	0.000	211.24	0.00	0.00	0.00	0.00	0.00
62	SAGBEND	-199.43	-35.10	2.62	300.69	0.000	0.000	211.24	0.00	0.00	0.00	0.00	0.00
63	SAGBEND	-205.47	-35.38	2.62	306.74	0.000	0.000	211.24	0.00	0.00	0.00	0.00	0.00
64	SAGBEND	-211.51	-35.65	2.61	312.79	0.000	0.000	211.24	0.00	0.00	0.00	0.00	0.00
65	SAGBEND	-217.56	-35.93	2.61	318.84	0.000	0.000	211.24	0.00	0.00	0.00	0.00	0.00
66	SAGBEND	-223.60	-36.21	2.61	324.89	0.000	0.000	211.24	0.00	0.00	0.00	0.00	0.00
67	SAGBEND	-229.64	-36.48	2.60	330.94	0.000	0.000	211.24	0.00	0.00	0.00	0.00	0.00
68	SAGBEND	-235.69	-36.75	2.60	336.99	0.000	0.000	211.23	0.00	0.00	0.00	0.00	0.00
69	SAGBEND	-241.73	-37.03	2.59	343.04	0.000	0.000	211.23	0.00	0.00	0.00	0.00	0.00
70	SAGBEND	-247.77	-37.30	2.59	349.09	0.000	0.000	211.23	0.00	0.00	0.00	0.00	0.00
71	SAGBEND	-253.82	-37.57	2.58	355.14	0.000	0.000	211.23	0.00	0.00	0.00	0.00	0.00
72	SAGBEND	-259.86	-37.85	2.58	361.19	0.000	0.000	211.23	0.00	0.00	0.00	0.00	0.00
73	SAGBEND	-265.91	-38.12	2.58	367.24	0.000	0.000	211.23	0.00	0.00	0.00	0.00	0.00
74	SAGBEND	-271.95	-38.39	2.57	373.29	0.000	0.000	211.23	0.00	0.00	0.00	0.00	0.00
75	SAGBEND	-277.99	-38.66	2.57	379.34	0.000	0.000	211.23	0.00	0.00	0.00	0.00	0.00
76	SAGBEND	-284.04	-38.93	2.56	385.39	0.000	0.000	211.23	0.00	0.00	0.00	0.00	0.00
77	SAGBEND	-290.08	-39.20	2.56	391.44	0.000	0.000	211.23	0.00	0.00	0.00	0.00	0.00
78	SAGBEND	-296.12	-39.47	2.55	397.49	0.000	0.000	211.23	0.00	0.00	0.00	0.00	0.00
79	SAGBEND	-302.17	-39.74	2.55	403.54	0.000	0.000	211.23	0.00	0.00	0.00	0.00	0.00
80	SAGBEND	-308.21	-40.01	2.55	409.59	0.000	0.000	211.23	0.00	0.00	0.00	0.00	0.00
81	SAGBEND	-314.25	-40.28	2.54	415.63	0.000	0.000	211.23	0.00	0.00	0.00	0.00	0.00
82	SAGBEND	-318.73	-40.48	2.54	420.12	0.000	0.000	211.22	0.00	0.00	0.00	0.00	0.00
83	SAGBEND	-322.54	-40.64	2.44	423.92	0.000	0.000	211.21	0.00	0.00	0.00	0.00	0.00
84	SAGBEND	-326.34	-40.80	2.34	427.73	0.000	0.000	211.19	0.00	0.00	0.00	0.00	0.00
85	SAGBEND	-332.39	-41.04	2.19	433.78	0.000	0.000	211.17	0.00	0.00	0.00	0.00	0.00
86	SAGBEND	-338.43	-41.26	2.03	439.83	0.000	0.000	211.15	0.00	0.00	0.00	0.00	0.00
87	SAGBEND	-344.48	-41.47	1.88	445.88	0.000	0.000	211.13	0.00	0.00	0.00	0.00	0.00
88	SAGBEND	-350.52	-41.66	1.72	451.93	0.000	0.000	211.11	0.00	0.00	0.00	0.00	0.00
89	SAGBEND	-356.57	-41.83	1.57	457.98	0.000	0.000	211.10	0.00	0.00	0.00	0.00	0.00
90	SAGBEND	-362.62	-41.99	1.41	464.03	0.000	0.000	211.08	0.00	0.00	0.00	0.00	0.00
91	SAGBEND	-368.67	-42.13	1.26	470.08	0.000	0.000	211.07	0.00	0.00	0.00	0.00	0.00
92	SAGBEND	-374.71	-42.26	1.10	476.13	0.000	0.000	211.06	0.00	0.00	0.00	0.00	0.00
93	SAGBEND	-380.76	-42.37	0.95	482.18	0.000	0.000	211.05	0.00	0.00	0.00	0.00	0.00
94	SAGBEND	-386.81	-42.46	0.79	488.23	0.000	0.000	211.04	0.00	0.00	0.00	0.00	0.00
95	SAGBEND	-392.86	-42.53	0.64	494.28	0.000	0.000	211.03	0.00	0.00	0.00	0.00	0.00
96	SAGBEND	-398.91	-42.59	0.48	500.33	0.000	0.000	211.03	0.00	0.00	0.00	0.00	0.00
97	SAGBEND	-404.96	-42.64	0.33	506.38	0.000	0.000	211.02	0.00	0.00	0.00	0.00	0.00
98	SAGBEND	-411.01	-42.66	0.17	512.43	0.003	0.000	211.02	0.00	0.00	0.00	0.00	0.00
99	SEABED	-417.06	-42.67	0.03	518.48	0.264	0.000	211.02	0.00	0.00	0.00	0.00	0.00
100	SEABED	-423.11	-42.67	0.00	524.52	0.530	0.000	211.02	0.00	0.00	0.00	0.00	0.00
101	SEABED	-429.16	-42.67	0.00	530.57	0.567	0.000	211.02	0.00	0.00	0.00	0.00	0.00

102	SEABED	-435.21	-42.67	0.00	536.62	0.571	0.000	211.02	0.00	0.00	0.00	0.00	0.00
103	SEABED	-441.26	-42.67	0.00	542.67	0.571	0.000	211.02	0.00	0.00	0.00	0.00	0.00
104	SEABED	-447.30	-42.67	0.00	548.72	0.571	0.000	211.02	0.00	0.00	0.00	0.00	0.00

S T A T I C P I P E C O O R D I N A T E S, F O R C E S A N D S T R E S S E S

NODE NO.	PIPE SECTION	X COORD (M)	Y COORD (M)	VERT ANGLE (DEG)	PIPE LENGTH (M)	SUPPORT REACTION (KN)	SEPARA -TION (M)	AXIAL TENSION (KN)	BENDING MOMENT (KN-M)	TENSILE STRESS (MPA)	BENDING STRESS (MPA)	TOTAL STRESS (MPA)	PERCNT YIELD (PCT)
105	SEABED	-453.35	-42.67	0.00	554.77	0.571	0.000	211.02	0.00	0.00	0.00	0.00	0.00
106	SEABED	-459.40	-42.67	0.00	560.82	0.571	0.000	211.02	0.00	0.00	0.00	0.00	0.00
107	SEABED	-465.45	-42.67	0.00	566.87	0.571	0.000	211.02	0.00	0.00	0.00	0.00	0.00
108	SEABED	-471.50	-42.67	0.00	572.92	0.571	0.000	211.02	0.00	0.00	0.00	0.00	0.00
109	SEABED	-477.55	-42.67	0.00	578.97	0.571	0.000	211.02	0.00	0.00	0.00	0.00	0.00
110	SEABED	-483.60	-42.67	0.00	585.02	0.571	0.000	211.02	0.00	0.00	0.00	0.00	0.00
111	SEABED	-489.65	-42.67	0.00	591.07	0.571	0.000	211.02	0.00	0.00	0.00	0.00	0.00
112	SEABED	-495.70	-42.67	0.00	597.12	0.571	0.000	211.02	0.00	0.00	0.00	0.00	0.00
113	SEABED	-501.75	-42.67	0.00	603.17	0.571	0.000	211.02	0.00	0.00	0.00	0.00	0.00
114	SEABED	-507.80	-42.67	0.00	609.22	0.571	0.000	211.02	0.00	0.00	0.00	0.00	0.00
115	SEABED	-513.85	-42.67	0.00	615.27	0.571	0.000	211.02	0.00	0.00	0.00	0.00	0.00
116	SEABED	-519.90	-42.67	0.00	621.32	0.571	0.000	211.02	0.00	0.00	0.00	0.00	0.00
117	SEABED	-525.95	-42.67	0.00	627.37	0.571	0.000	211.02	0.00	0.00	0.00	0.00	0.00
118	SEABED	-532.00	-42.67	0.00	633.41	0.571	0.000	211.02	0.00	0.00	0.00	0.00	0.00
119	SEABED	-538.05	-42.67	0.00	639.46	0.571	0.000	211.02	0.00	0.00	0.00	0.00	0.00
120	SEABED	-544.10	-42.67	0.00	645.51	0.571	0.000	211.02	0.00	0.00	0.00	0.00	0.00
121	SEABED	-550.15	-42.67	0.00	651.56	0.571	0.000	211.02	0.00	0.00	0.00	0.00	0.00
122	SEABED	-556.19	-42.67	0.00	657.61	0.571	0.000	211.02	0.00	0.00	0.00	0.00	0.00
123	SEABED	-562.24	-42.67	0.00	663.66	0.571	0.000	211.02	0.00	0.00	0.00	0.00	0.00
124	SEABED	-568.29	-42.67	0.00	669.71	0.571	0.000	211.02	0.00	0.00	0.00	0.00	0.00
125	SEABED	-574.34	-42.67	0.00	675.76	0.571	0.000	211.02	0.00	0.00	0.00	0.00	0.00
126	SEABED	-580.39	-42.67	0.00	681.81	0.571	0.000	211.02	0.00	0.00	0.00	0.00	0.00
127	SEABED	-586.44	-42.67	0.00	687.86	0.571	0.000	211.02	0.00	0.00	0.00	0.00	0.00
128	SEABED	-592.49	-42.67	0.00	693.91	0.571	0.000	211.02	0.00	0.00	0.00	0.00	0.00
129	SEABED	-598.54	-42.67	0.00	699.96	0.571	0.000	211.02	0.00	0.00	0.00	0.00	0.00
130	SEABED	-604.59	-42.67	0.00	706.01	0.571	0.000	211.02	0.00	0.00	0.00	0.00	0.00
131	SEABED	-610.64	-42.67	0.00	712.06	0.571	0.000	211.02	0.00	0.00	0.00	0.00	0.00
132	SEABED	-616.69	-42.67	0.00	718.11	0.571	0.000	211.02	0.00	0.00	0.00	0.00	0.00
133	SEABED	-622.74	-42.67	0.00	724.16	0.571	0.000	211.02	0.00	0.00	0.00	0.00	0.00
134	SEABED	-628.79	-42.67	0.00	730.21	0.571	0.000	211.02	0.00	0.00	0.00	0.00	0.00
135	SEABED	-634.84	-42.67	0.00	736.25	0.571	0.000	211.02	0.00	0.00	0.00	0.00	0.00
136	SEABED	-640.89	-42.67	0.00	742.30	0.571	0.000	211.02	0.00	0.00	0.00	0.00	0.00
137	SEABED	-646.94	-42.67	0.00	748.35	0.571	0.000	211.02	0.00	0.00	0.00	0.00	0.00
138	SEABED	-652.99	-42.67	0.00	754.40	0.571	0.000	211.02	0.00	0.00	0.00	0.00	0.00
139	SEABED	-659.03	-42.67	0.00	760.45	0.571	0.000	211.02	0.00	0.00	0.00	0.00	0.00
140	SEABED	-665.08	-42.67	0.00	766.50	0.571	0.000	211.02	0.00	0.00	0.00	0.00	0.00
141	SEABED	-671.13	-42.67	0.00	772.55	0.571	0.000	211.02	0.00	0.00	0.00	0.00	0.00
142	SEABED	-677.18	-42.67	0.00	778.60	0.571	0.000	211.02	0.00	0.00	0.00	0.00	0.00
143	SEABED	-683.23	-42.67	0.00	784.65	0.571	0.000	211.02	0.00	0.00	0.00	0.00	0.00
144	SEABED	-689.28	-42.67	0.00	790.70	0.571	0.000	211.02	0.00	0.00	0.00	0.00	0.00
145	SEABED	-695.33	-42.67	0.00	796.75	0.571	0.000	211.02	0.00	0.00	0.00	0.00	0.00
146	SEABED	-701.38	-42.67	0.00	802.80	0.570	0.000	211.02	0.00	0.00	0.00	0.00	0.00
147	SEABED	-707.43	-42.67	0.00	808.85	0.558	0.000	211.02	0.00	0.00	0.00	0.00	0.00
148	SEABED	-713.48	-42.67	-0.01	814.90	0.433	0.000	211.02	0.00	0.00	0.00	0.00	0.00
149	SEABED	-718.66	-42.67	-0.07	820.08	0.000	0.000	211.02	0.00	0.00	0.00	0.00	0.00

S T A T I C P I P E C O O R D I N A T E S, F O R C E S A N D S T R E S S E S

NODE NO.	PIPE SECTION	X COORD (M)	Y COORD (M)	VERT ANGLE (DEG)	PIPE LENGTH (M)	SUPPORT REACTION (KN)	SEPARA -TION (M)	AXIAL TENSION (KN)	BENDING MOMENT (KN-M)	TENSILE STRESS (MPA)	BENDING STRESS (MPA)	TOTAL STRESS (MPA)	PERCNT YIELD (PCT)
1	LAYBARGE	96.31	6.41	1.93	0.00	9.947	0.000	0.00	2.75	0.00	4.25	4.25	1.18
3	LAYBARGE	84.28	6.05	1.58	12.04	24.042	0.000	-0.73	-19.05	-0.07	-29.49	29.56	8.21
5	LAYBARGE	73.45	5.73	1.91	22.87	24.742	0.000	-1.39	-30.13	-0.13	-46.64	46.77	12.99
7	TENSIONR	60.11	5.24	2.28	36.23	30.965	0.000	252.82	-21.40	24.34	-33.12	57.47	15.96
9	LAYBARGE	51.10	4.87	2.21	45.24	0.000	0.000	252.10	23.68	24.27	36.66	60.94	16.93
10	LAYBARGE	46.45	4.70	2.02	49.89	14.836	0.000	251.77	4.85	24.24	7.52	31.76	8.82
12	LAYBARGE	35.36	4.31	2.25	60.99	23.607	0.000	250.92	-42.35	24.16	-65.56	89.72	24.92
14	LAYBARGE	23.34	3.62	4.98	73.04	55.806	0.000	248.81	-173.76	23.96	-269.01	292.97	81.38
16	LAYBARGE	19.27	3.21	6.53	77.13	0.000	0.000	248.48	-115.82	23.93	-179.31	203.24	56.46
17	LAYBARGE	8.90	1.76	9.65	87.60	19.558	0.000	245.18	-171.40	23.61	-265.36	288.97	80.27
19	LAYBARGE	4.93	1.01	11.68	91.64	0.000	0.000	243.24	-225.61	23.42	-349.27	372.69	103.53
20	LAYBARGE	3.12	0.62	12.85	93.49	57.747	0.000	241.94	-270.12	23.30	-418.18	441.48	122.63
24	STINGER	-7.51	-2.37	18.06	104.53	21.592	0.000	239.40	-160.09	22.92	-247.84	270.89	75.25
26	STINGER	-16.12	-5.43	20.94	113.68	13.627	0.000	236.61	-116.87	22.47	-180.93	203.70	56.58
29	STINGER	-25.25	-9.17	23.68	123.54	29.532	0.000	232.78	-132.72	21.89	-205.47	227.87	63.30
31	STINGER	-35.16	-13.78	25.77	134.47	14.722	0.000	228.52	-49.12	21.22	-76.04	98.01	27.23
33	STINGER	-37.87	-15.09	26.00	137.48	0.000	0.399	227.26	-12.88	21.03	-19.95	41.81	11.61
35	SAGBEND	-43.19	-17.68	25.81	143.40	0.000	0.000	224.65	33.82	20.63	52.36	73.97	20.55
36	SAGBEND	-48.65	-20.28	25.06	149.45	0.000	0.000	221.99	60.75	20.23	94.05	115.39	32.05
37	SAGBEND	-54.15	-22.80	23.98	155.50	0.000	0.000	219.44	76.29	19.84	118.11	139.20	38.67
38	SAGBEND	-59.71	-25.20	22.72	161.55	0.000	0.000	217.01	85.65	19.47	132.61	153.45	42.63
39	SAGBEND	-65.32	-27.47	21.34	167.60	0.000	0.000	214.71	91.63	19.12	141.86	162.48	45.13
40	SAGBEND	-70.98	-29.60	19.89	173.65	0.000	0.000	212.57	95.72	18.79	148.19	168.61	46.84
41	SAGBEND	-76.69	-31.58	18.38	179.70	0.000	0.000	210.57	98.73	18.49	152.84	173.06	48.07
42	SAGBEND	-82.46	-33.41	16.83	185.75	0.000	0.000	208.74	101.06	18.21	156.46	176.50	49.03
43	SAGBEND	-88.27	-35.08	15.25	191.80	0.000	0.000	207.06	102.95	17.95	159.38	179.25	49.79
44	SAGBEND	-94.13	-36.59	13.64	197.85	0.000	0.000	205.54	104.45	17.72	161.71	181.44	50.40
45	SAGBEND	-100.03	-37.93	12.01	203.90	0.000	0.000	204.20	105.59	17.51	163.47	183.06	50.85
46	SAGBEND	-105.97	-39.11	10.37	209.95	0.000	0.000	203.02	106.26	17.33	164.51	183.99	51.11
47	SAGBEND	-111.93	-40.11	8.72	216.00	0.000	0.000	202.02	106.29	17.18	164.55	183.94	51.09
48	SAGBEND	-117.92	-40.94	7.07	222.05	0.000	0.000	201.19	105.32	17.05	163.05	182.36	50.65
49	SAGBEND	-123.94	-41.60	5.46	228.10	0.000	0.000	200.55	102.73	16.95	159.05	178.29	49.52
50	SAGBEND	-129.97	-42.10	3.90	234.15	0.000	0.000	200.08	97.42	16.88	150.82	170.02	47.23
51	SAGBEND	-136.01	-42.43	2.46	240.20	0.000	0.000	199.78	87.44	16.83	135.37	154.54	42.93
52	SAGBEND	-142.05	-42.62	1.23	246.25	0.212	0.000	199.66	69.32	16.81	107.32	126.50	35.14
53	SEABED	-148.10	-42.70	0.38	252.30	4.905	0.000	199.66	38.91	16.81	60.24	79.45	22.07
54	SEABED	-154.15	-42.72	-0.01	258.35	7.888	0.000	199.70	14.12	16.81	21.86	41.17	11.44
55	SEABED	-160.20	-42.71	-0.14	264.39	6.358	0.000	199.70	5.15	16.81	7.97	27.38	7.60
56	SEABED	-165.93	-42.69	-0.19	270.13	3.472	0.000	199.70	0.95	16.81	1.47	20.97	5.82
57	SEABED	-172.30	-42.67	0.00	276.49	0.637	0.000	199.69	0.14	0.00	0.00	0.00	0.00
58	SEABED	-178.35	-42.67	0.00	282.54	0.078	0.000	199.69	0.02	0.00	0.00	0.00	0.00
59	SEABED	-184.40	-42.67	0.00	288.59	0.023	0.000	199.69	0.00	0.00	0.00	0.00	0.00

S T A T I C P I P E C O O R D I N A T E S, F O R C E S A N D S T R E S S E S

NODE NO.	PIPE SECTION	X COORD (M)	Y COORD (M)	VERT ANGLE (DEG)	PIPE LENGTH (M)	SUPPORT REACTION (KN)	SEPARA -TION (M)	AXIAL TENSION (KN)	BENDING MOMENT (KN-M)	TENSILE STRESS (MPA)	BENDING STRESS (MPA)	TOTAL STRESS (MPA)	PERCNT YIELD (PCT)
60	SEABED	-190.45	-42.67	0.00	294.64	0.017	0.000	199.69	0.00	0.00	0.00	0.00	0.00
61	SEABED	-196.50	-42.67	0.00	300.69	0.016	0.000	199.69	0.00	0.00	0.00	0.00	0.00
62	SEABED	-202.55	-42.67	0.00	306.74	0.016	0.000	199.69	0.00	0.00	0.00	0.00	0.00
63	SEABED	-208.60	-42.67	0.00	312.79	0.016	0.000	199.69	0.00	0.00	0.00	0.00	0.00
64	SEABED	-214.65	-42.67	0.00	318.84	0.016	0.000	199.69	0.00	0.00	0.00	0.00	0.00
65	SEABED	-220.70	-42.67	0.00	324.89	0.016	0.000	199.69	0.00	0.00	0.00	0.00	0.00
66	SEABED	-226.75	-42.67	0.00	330.94	0.016	0.000	199.69	0.00	0.00	0.00	0.00	0.00
67	SEABED	-232.80	-42.67	0.00	336.99	0.016	0.000	199.69	0.00	0.00	0.00	0.00	0.00
68	SEABED	-238.85	-42.67	0.00	343.04	0.016	0.000	199.69	0.00	0.00	0.00	0.00	0.00
69	SEABED	-244.90	-42.67	0.00	349.09	0.016	0.000	199.69	0.00	0.00	0.00	0.00	0.00
70	SEABED	-250.95	-42.67	0.00	355.14	0.016	0.000	199.69	0.00	0.00	0.00	0.00	0.00
71	SEABED	-257.00	-42.67	0.00	361.19	0.016	0.000	199.69	0.00	0.00	0.00	0.00	0.00
72	SEABED	-263.05	-42.67	0.00	367.24	0.016	0.000	199.69	0.00	0.00	0.00	0.00	0.00
73	SEABED	-269.09	-42.67	0.00	373.29	0.016	0.000	199.69	0.00	0.00	0.00	0.00	0.00
74	SEABED	-275.14	-42.67	0.00	379.34	0.016	0.000	199.69	0.00	0.00	0.00	0.00	0.00
75	SEABED	-281.19	-42.67	0.00	385.39	0.016	0.000	199.69	0.00	0.00	0.00	0.00	0.00
76	SEABED	-287.24	-42.67	0.00	391.43	0.016	0.000	199.69	0.00	0.00	0.00	0.00	0.00
77	SEABED	-293.29	-42.67	0.00	397.48	0.016	0.000	199.69	0.00	0.00	0.00	0.00	0.00
78	SEABED	-299.34	-42.67	0.00	403.53	0.016	0.000	199.69	0.00	0.00	0.00	0.00	0.00
79	SEABED	-305.39	-42.67	0.00	409.58	0.016	0.000	199.69	0.00	0.00	0.00	0.00	0.00
80	SEABED	-311.44	-42.67	0.00	415.63	0.016	0.000	199.69	0.00	0.00	0.00	0.00	0.00
81	SEABED	-317.49	-42.67	0.00	421.68	0.016	0.000	199.69	0.00	0.00	0.00	0.00	0.00
82	SEABED	-323.54	-42.67	0.00	427.73	0.016	0.000	199.69	0.00	0.00	0.00	0.00	0.00
83	SEABED	-329.59	-42.67	0.00	433.78	0.016	0.000	199.69	0.00	0.00	0.00	0.00	0.00
84	SEABED	-335.64	-42.67	0.00	439.83	0.016	0.000	199.69	0.00	0.00	0.00	0.00	0.00
85	SEABED	-341.69	-42.67	0.00	445.88	0.016	0.000	199.69	0.00	0.00	0.00	0.00	0.00
86	SEABED	-347.74	-42.67	0.00	451.93	0.016	0.000	199.69	0.00	0.00	0.00	0.00	0.00
87	SEABED	-353.79	-42.67	0.00	457.98	0.020	0.000	199.69	0.00	0.00	0.00	0.00	0.00
88	SEABED	-359.84	-42.67	0.00	464.03	0.057	0.000	199.69	0.00	0.00	0.00	0.00	0.00
89	SEABED	-365.89	-42.67	0.03	470.08	0.294	0.000	199.69	0.00	0.00	0.00	0.00	0.00
90	SEABED	-371.94	-42.67	0.00	476.13	0.531	0.000	199.69	0.00	0.00	0.00	0.00	0.00
91	SEABED	-377.98	-42.67	0.00	482.18	0.567	0.000	199.69	0.00	0.00	0.00	0.00	0.00
92	SEABED	-384.03	-42.67	0.00	488.23	0.571	0.000	199.69	0.00	0.00	0.00	0.00	0.00
93	SEABED	-390.08	-42.67	0.00	494.27	0.571	0.000	199.69	0.00	0.00	0.00	0.00	0.00
94	SEABED	-396.13	-42.67	0.00	500.32	0.571	0.000	199.69	0.00	0.00	0.00	0.00	0.00
95	SEABED	-402.18	-42.67	0.00	506.37	0.571	0.000	199.69	0.00	0.00	0.00	0.00	0.00
96	SEABED	-408.23	-42.67	0.00	512.42	0.571	0.000	199.69	0.00	0.00	0.00	0.00	0.00

97	SEABED	-414.28	-42.67	0.00	518.47	0.571	0.000	199.69	0.00	0.00	0.00	0.00	0.00
98	SEABED	-420.33	-42.67	0.00	524.52	0.571	0.000	199.69	0.00	0.00	0.00	0.00	0.00
99	SEABED	-426.38	-42.67	0.00	530.57	0.571	0.000	199.69	0.00	0.00	0.00	0.00	0.00
100	SEABED	-432.43	-42.67	0.00	536.62	0.571	0.000	199.69	0.00	0.00	0.00	0.00	0.00
101	SEABED	-438.48	-42.67	0.00	542.67	0.571	0.000	199.69	0.00	0.00	0.00	0.00	0.00
102	SEABED	-444.53	-42.67	0.00	548.72	0.571	0.000	199.69	0.00	0.00	0.00	0.00	0.00
103	SEABED	-450.58	-42.67	0.00	554.77	0.571	0.000	199.69	0.00	0.00	0.00	0.00	0.00
104	SEABED	-456.62	-42.67	0.00	560.82	0.571	0.000	199.69	0.00	0.00	0.00	0.00	0.00

S T A T I C P I P E C O O R D I N A T E S, F O R C E S A N D S T R E S S E S

NODE NO.	PIPE SECTION	X COORD (M)	Y COORD (M)	VERT ANGLE (DEG)	PIPE LENGTH (M)	SUPPORT REACTION (KN)	SEPARA -TION (M)	AXIAL TENSION (KN)	BENDING MOMENT (KN-M)	TENSILE STRESS (MPA)	BENDING STRESS (MPA)	TOTAL STRESS (MPA)	PERCNT YIELD (PCT)
105	SEABED	-462.67	-42.67	0.00	566.86	0.571	0.000	199.69	0.00	0.00	0.00	0.00	0.00
106	SEABED	-468.72	-42.67	0.00	572.91	0.571	0.000	199.69	0.00	0.00	0.00	0.00	0.00
107	SEABED	-474.77	-42.67	0.00	578.96	0.571	0.000	199.69	0.00	0.00	0.00	0.00	0.00
108	SEABED	-480.82	-42.67	0.00	585.01	0.571	0.000	199.69	0.00	0.00	0.00	0.00	0.00
109	SEABED	-486.87	-42.67	0.00	591.06	0.571	0.000	199.69	0.00	0.00	0.00	0.00	0.00
110	SEABED	-492.92	-42.67	0.00	597.11	0.571	0.000	199.69	0.00	0.00	0.00	0.00	0.00
111	SEABED	-498.97	-42.67	0.00	603.16	0.571	0.000	199.69	0.00	0.00	0.00	0.00	0.00
112	SEABED	-505.02	-42.67	0.00	609.21	0.571	0.000	199.69	0.00	0.00	0.00	0.00	0.00
113	SEABED	-511.07	-42.67	0.00	615.26	0.571	0.000	199.69	0.00	0.00	0.00	0.00	0.00
114	SEABED	-517.12	-42.67	0.00	621.31	0.571	0.000	199.69	0.00	0.00	0.00	0.00	0.00
115	SEABED	-523.17	-42.67	0.00	627.36	0.571	0.000	199.69	0.00	0.00	0.00	0.00	0.00
116	SEABED	-529.21	-42.67	0.00	633.41	0.571	0.000	199.69	0.00	0.00	0.00	0.00	0.00
117	SEABED	-535.26	-42.67	0.00	639.46	0.571	0.000	199.69	0.00	0.00	0.00	0.00	0.00
118	SEABED	-541.31	-42.67	0.00	645.50	0.571	0.000	199.69	0.00	0.00	0.00	0.00	0.00
119	SEABED	-547.36	-42.67	0.00	651.55	0.571	0.000	199.69	0.00	0.00	0.00	0.00	0.00
120	SEABED	-553.41	-42.67	0.00	657.60	0.571	0.000	199.69	0.00	0.00	0.00	0.00	0.00
121	SEABED	-559.46	-42.67	0.00	663.65	0.571	0.000	199.69	0.00	0.00	0.00	0.00	0.00
122	SEABED	-565.51	-42.67	0.00	669.70	0.571	0.000	199.69	0.00	0.00	0.00	0.00	0.00
123	SEABED	-571.56	-42.67	0.00	675.75	0.571	0.000	199.69	0.00	0.00	0.00	0.00	0.00
124	SEABED	-577.61	-42.67	0.00	681.80	0.571	0.000	199.69	0.00	0.00	0.00	0.00	0.00
125	SEABED	-583.66	-42.67	0.00	687.85	0.571	0.000	199.69	0.00	0.00	0.00	0.00	0.00
126	SEABED	-589.71	-42.67	0.00	693.90	0.571	0.000	199.69	0.00	0.00	0.00	0.00	0.00
127	SEABED	-595.76	-42.67	0.00	699.95	0.571	0.000	199.69	0.00	0.00	0.00	0.00	0.00
128	SEABED	-601.80	-42.67	0.00	706.00	0.571	0.000	199.69	0.00	0.00	0.00	0.00	0.00
129	SEABED	-607.85	-42.67	0.00	712.05	0.571	0.000	199.69	0.00	0.00	0.00	0.00	0.00
130	SEABED	-613.90	-42.67	0.00	718.09	0.571	0.000	199.69	0.00	0.00	0.00	0.00	0.00
131	SEABED	-619.95	-42.67	0.00	724.14	0.571	0.000	199.69	0.00	0.00	0.00	0.00	0.00
132	SEABED	-626.00	-42.67	0.00	730.19	0.571	0.000	199.69	0.00	0.00	0.00	0.00	0.00
133	SEABED	-632.05	-42.67	0.00	736.24	0.571	0.000	199.69	0.00	0.00	0.00	0.00	0.00
134	SEABED	-638.10	-42.67	0.00	742.29	0.571	0.000	199.69	0.00	0.00	0.00	0.00	0.00
135	SEABED	-644.15	-42.67	0.00	748.34	0.571	0.000	199.69	0.00	0.00	0.00	0.00	0.00
136	SEABED	-650.20	-42.67	0.00	754.39	0.571	0.000	199.69	0.00	0.00	0.00	0.00	0.00
137	SEABED	-656.25	-42.67	0.00	760.44	0.571	0.000	199.69	0.00	0.00	0.00	0.00	0.00
138	SEABED	-662.30	-42.67	0.00	766.49	0.571	0.000	199.69	0.00	0.00	0.00	0.00	0.00
139	SEABED	-668.35	-42.67	0.00	772.54	0.571	0.000	199.69	0.00	0.00	0.00	0.00	0.00
140	SEABED	-674.39	-42.67	0.00	778.59	0.571	0.000	199.69	0.00	0.00	0.00	0.00	0.00
141	SEABED	-680.44	-42.67	0.00	784.64	0.571	0.000	199.69	0.00	0.00	0.00	0.00	0.00
142	SEABED	-686.49	-42.67	0.00	790.68	0.571	0.000	199.69	0.00	0.00	0.00	0.00	0.00
143	SEABED	-692.54	-42.67	0.00	796.73	0.571	0.000	199.69	0.00	0.00	0.00	0.00	0.00
144	SEABED	-698.59	-42.67	0.00	802.78	0.571	0.000	199.69	0.00	0.00	0.00	0.00	0.00
145	SEABED	-704.64	-42.67	0.00	808.83	0.571	0.000	199.69	0.00	0.00	0.00	0.00	0.00
146	SEABED	-710.69	-42.67	0.00	814.88	0.571	0.000	199.69	0.00	0.00	0.00	0.00	0.00
147	SEABED	-716.74	-42.67	0.00	820.93	0.571	0.000	199.69	0.00	0.00	0.00	0.00	0.00
148	SEABED	-722.79	-42.67	0.00	826.98	0.571	0.000	199.69	0.00	0.00	0.00	0.00	0.00
149	SEABED	-728.84	-42.67	0.00	833.03	0.571	0.000	199.69	0.00	0.00	0.00	0.00	0.00

S T A T I C P I P E C O O R D I N A T E S, F O R C E S A N D S T R E S S E S

NODE NO.	PIPE SECTION	X COORD (M)	Y COORD (M)	VERT ANGLE (DEG)	PIPE LENGTH (M)	SUPPORT REACTION (KN)	SEPARA -TION (M)	AXIAL TENSION (KN)	BENDING MOMENT (KN-M)	TENSILE STRESS (MPA)	BENDING STRESS (MPA)	TOTAL STRESS (MPA)	PERCNT YIELD (PCT)
150	SEABED	-734.89	-42.67	0.00	839.08	0.571	0.000	199.69	0.00	0.00	0.00	0.00	0.00
151	SEABED	-740.94	-42.67	0.00	845.13	0.571	0.000	199.69	0.00	0.00	0.00	0.00	0.00
152	SEABED	-746.98	-42.67	0.00	851.18	0.571	0.000	199.69	0.00	0.00	0.00	0.00	0.00
153	SEABED	-753.03	-42.67	0.00	857.23	0.565	0.000	199.69	0.00	0.00	0.00	0.00	0.00
154	SEABED	-759.08	-42.67	-0.01	863.27	0.413	0.000	199.69	0.00	0.00	0.00	0.00	0.00
155	SEABED	-762.47	-42.67	-0.02	866.66	0.219	0.000	199.69	0.00	0.00	0.00	0.00	0.00
156	SEABED	-765.86	-42.67	-0.07	870.06	0.000	0.000	199.70	0.00	0.00	0.00	0.00	0.00

S T A T I C P I P E C O O R D I N A T E S, F O R C E S A N D S T R E S S E S

NODE NO.	PIPE SECTION	X COORD (M)	Y COORD (M)	VERT ANGLE (DEG)	PIPE LENGTH (M)	SUPPORT REACTION (KN)	SEPARA -TION (M)	AXIAL TENSION (KN)	BENDING MOMENT (KN-M)	TENSILE STRESS (MPA)	BENDING STRESS (MPA)	TOTAL STRESS (MPA)	PERCNT YIELD (PCT)
1	LAYBARGE	96.31	6.41	1.93	0.00	9.947	0.000	0.00	2.75	0.00	4.25	4.25	1.18
3	LAYBARGE	84.28	6.05	1.58	12.04	24.040	0.000	-0.73	-19.04	-0.07	-29.48	29.55	8.21
5	LAYBARGE	73.45	5.73	1.91	22.87	24.746	0.000	-1.40	-30.13	-0.13	-46.65	46.79	13.00
7	TENSIONR	60.11	5.24	2.28	36.23	30.971	0.000	266.42	-21.36	25.65	-33.06	58.71	16.31
9	LAYBARGE	51.10	4.87	2.21	45.24	0.000	0.000	265.70	23.60	25.58	36.53	62.11	17.25
10	LAYBARGE	46.45	4.70	2.02	49.89	14.718	0.000	265.38	4.96	25.55	7.68	33.24	9.23
12	LAYBARGE	35.36	4.31	2.25	60.99	23.920	0.000	264.52	-42.46	25.47	-65.74	91.21	25.34
14	LAYBARGE	23.34	3.62	4.98	73.04	56.718	0.000	262.41	-174.32	25.27	-269.88	295.15	81.99
16	LAYBARGE	19.27	3.21	6.53	77.13	0.000	0.000	262.09	-115.54	25.24	-178.88	204.11	56.70
17	LAYBARGE	8.90	1.76	9.66	87.60	22.027	0.000	258.76	-172.85	24.92	-267.59	292.51	81.25
19	LAYBARGE	4.93	1.01	11.67	91.64	0.000	0.000	256.89	-221.38	24.73	-342.74	367.47	102.08
20	LAYBARGE	3.12	0.62	12.82	93.49	56.476	0.000	255.62	-263.54	24.61	-407.99	432.61	120.17
24	STINGER	-7.50	-2.34	17.88	104.51	22.811	0.000	253.04	-157.71	24.23	-244.16	268.52	74.59
26	STINGER	-16.13	-5.37	20.66	113.66	13.235	0.000	250.30	-110.88	23.80	-171.66	195.75	54.37
29	STINGER	-25.29	-9.06	23.26	123.54	29.487	0.000	246.52	-127.76	23.22	-197.79	221.51	61.53
31	STINGER	-35.24	-13.59	25.25	134.47	14.779	0.000	242.32	-47.31	22.56	-73.24	96.54	26.82
33	STINGER	-37.96	-14.87	25.48	137.48	0.000	0.402	241.08	-11.96	22.37	-18.51	41.71	11.59
35	SAGBEND	-43.30	-17.42	25.28	143.40	0.000	0.000	238.52	33.01	21.98	51.10	74.04	20.57
36	SAGBEND	-48.79	-19.97	24.55	149.45	0.000	0.000	235.92	58.43	21.58	90.46	113.14	31.43
37	SAGBEND	-54.31	-22.44	23.53	155.50	0.000	0.000	233.41	72.80	21.20	112.71	135.14	37.54
38	SAGBEND	-59.88	-24.79	22.33	161.55	0.000	0.000	231.03	81.29	20.84	125.86	148.05	41.13
39	SAGBEND	-65.51	-27.03	21.02	167.60	0.000	0.000	228.77	86.62	20.50	134.10	156.08	43.36
40	SAGBEND	-71.18	-29.13	19.65	173.65	0.000	0.000	226.66	90.22	20.17	139.67	161.45	44.85
41	SAGBEND	-76.90	-31.09	18.23	179.70	0.000	0.000	224.69	92.85	19.87	143.74	165.32	45.92
42	SAGBEND	-82.67	-32.91	16.77	185.75	0.000	0.000	222.86	94.90	19.59	146.92	168.32	46.76
43	SAGBEND	-88.48	-34.58	15.29	191.80	0.000	0.000	221.19	96.57	19.34	149.51	170.75	47.43
44	SAGBEND	-94.34	-36.10	13.78	197.85	0.000	0.000	219.66	97.96	19.11	151.65	172.74	47.98
45	SAGBEND	-100.24	-37.47	12.25	203.90	0.000	0.000	218.30	99.06	18.90	153.36	174.32	48.42
46	SAGBEND	-106.16	-38.67	10.71	209.95	0.000	0.000	217.09	99.85	18.71	154.58	175.42	48.73
47	SAGBEND	-112.12	-39.71	9.15	216.00	0.000	0.000	216.05	100.20	18.55	155.13	175.86	48.85
48	SAGBEND	-118.11	-40.59	7.60	222.05	0.000	0.000	215.17	99.90	18.42	154.66	175.31	48.70
49	SAGBEND	-124.12	-41.31	6.06	228.10	0.000	0.000	214.46	98.53	18.31	152.54	173.12	48.09
50	SAGBEND	-130.14	-41.87	4.55	234.15	0.000	0.000	213.91	95.36	18.22	147.64	168.17	46.71
51	SAGBEND	-136.18	-42.28	3.12	240.20	0.000	0.000	213.53	89.07	18.17	137.90	158.40	44.00
52	SAGBEND	-142.22	-42.53	1.82	246.25	0.000	0.000	213.32	77.28	18.13	119.63	140.12	38.92
53	SAGBEND	-148.27	-42.67	0.77	252.30	1.475	0.000	213.25	55.65	18.12	86.16	106.66	29.63
54	SEABED	-154.32	-42.71	0.14	258.35	6.664	0.000	213.29	26.24	18.12	40.62	61.18	16.99
55	SEABED	-160.37	-42.71	-0.11	264.39	6.695	0.000	213.30	9.42	18.12	14.59	35.24	9.79
56	SEABED	-166.10	-42.70	-0.19	270.13	3.999	0.000	213.30	1.23	18.12	1.91	22.69	6.30
57	SEABED	-172.47	-42.67	0.00	276.49	0.786	0.000	213.29	0.19	0.00	0.00	0.00	0.00
58	SEABED	-178.52	-42.67	0.00	282.54	0.099	0.000	213.29	0.03	0.00	0.00	0.00	0.00
59	SEABED	-184.57	-42.67	0.00	288.59	0.026	0.000	213.29	0.01	0.00	0.00	0.00	0.00

S T A T I C P I P E C O O R D I N A T E S, F O R C E S A N D S T R E S S E S

NODE NO.	PIPE SECTION	X COORD (M)	Y COORD (M)	VERT ANGLE (DEG)	PIPE LENGTH (M)	SUPPORT REACTION (KN)	SEPARA -TION (M)	AXIAL TENSION (KN)	BENDING MOMENT (KN-M)	TENSILE STRESS (MPA)	BENDING STRESS (MPA)	TOTAL STRESS (MPA)	PERCNT YIELD (PCT)
60	SEABED	-190.62	-42.67	0.00	294.64	0.017	0.000	213.29	0.00	0.00	0.00	0.00	0.00
61	SEABED	-196.67	-42.67	0.00	300.69	0.016	0.000	213.29	0.00	0.00	0.00	0.00	0.00
62	SEABED	-202.71	-42.67	0.00	306.74	0.016	0.000	213.29	0.00	0.00	0.00	0.00	0.00
63	SEABED	-208.76	-42.67	0.00	312.79	0.016	0.000	213.29	0.00	0.00	0.00	0.00	0.00
64	SEABED	-214.81	-42.67	0.00	318.84	0.016	0.000	213.29	0.00	0.00	0.00	0.00	0.00
65	SEABED	-220.86	-42.67	0.00	324.89	0.016	0.000	213.29	0.00	0.00	0.00	0.00	0.00
66	SEABED	-226.91	-42.67	0.00	330.94	0.016	0.000	213.29	0.00	0.00	0.00	0.00	0.00
67	SEABED	-232.96	-42.67	0.00	336.99	0.016	0.000	213.29	0.00	0.00	0.00	0.00	0.00
68	SEABED	-239.01	-42.67	0.00	343.04	0.016	0.000	213.29	0.00	0.00	0.00	0.00	0.00
69	SEABED	-245.06	-42.67	0.00	349.09	0.016	0.000	213.29	0.00	0.00	0.00	0.00	0.00
70	SEABED	-251.11	-42.67	0.00	355.14	0.016	0.000	213.29	0.00	0.00	0.00	0.00	0.00

71	SEABED	-257.16	-42.67	0.00	361.19	0.016	0.000	213.29	0.00	0.00	0.00	0.00	0.00
72	SEABED	-263.21	-42.67	0.00	367.24	0.016	0.000	213.29	0.00	0.00	0.00	0.00	0.00
73	SEABED	-269.26	-42.67	0.00	373.29	0.016	0.000	213.29	0.00	0.00	0.00	0.00	0.00
74	SEABED	-275.31	-42.67	0.00	379.34	0.016	0.000	213.29	0.00	0.00	0.00	0.00	0.00
75	SEABED	-281.36	-42.67	0.00	385.39	0.016	0.000	213.29	0.00	0.00	0.00	0.00	0.00
76	SEABED	-287.41	-42.67	0.00	391.43	0.016	0.000	213.29	0.00	0.00	0.00	0.00	0.00
77	SEABED	-293.46	-42.67	0.00	397.48	0.016	0.000	213.29	0.00	0.00	0.00	0.00	0.00
78	SEABED	-299.51	-42.67	0.00	403.53	0.016	0.000	213.29	0.00	0.00	0.00	0.00	0.00
79	SEABED	-305.56	-42.67	0.00	409.58	0.016	0.000	213.29	0.00	0.00	0.00	0.00	0.00
80	SEABED	-311.61	-42.67	0.00	415.63	0.016	0.000	213.29	0.00	0.00	0.00	0.00	0.00
81	SEABED	-317.65	-42.67	0.00	421.68	0.016	0.000	213.29	0.00	0.00	0.00	0.00	0.00
82	SEABED	-323.70	-42.67	0.00	427.73	0.016	0.000	213.29	0.00	0.00	0.00	0.00	0.00
83	SEABED	-329.75	-42.67	0.00	433.78	0.016	0.000	213.29	0.00	0.00	0.00	0.00	0.00
84	SEABED	-335.80	-42.67	0.00	439.83	0.016	0.000	213.29	0.00	0.00	0.00	0.00	0.00
85	SEABED	-341.85	-42.67	0.00	445.88	0.016	0.000	213.29	0.00	0.00	0.00	0.00	0.00
86	SEABED	-347.90	-42.67	0.00	451.93	0.016	0.000	213.29	0.00	0.00	0.00	0.00	0.00
87	SEABED	-353.95	-42.67	0.00	457.98	0.021	0.000	213.29	0.00	0.00	0.00	0.00	0.00
88	SEABED	-360.00	-42.67	0.00	464.03	0.059	0.000	213.29	0.00	0.00	0.00	0.00	0.00
89	SEABED	-366.05	-42.67	0.03	470.08	0.294	0.000	213.29	0.00	0.00	0.00	0.00	0.00
90	SEABED	-372.10	-42.67	0.00	476.13	0.528	0.000	213.29	0.00	0.00	0.00	0.00	0.00
91	SEABED	-378.15	-42.67	0.00	482.18	0.566	0.000	213.29	0.00	0.00	0.00	0.00	0.00
92	SEABED	-384.20	-42.67	0.00	488.23	0.571	0.000	213.29	0.00	0.00	0.00	0.00	0.00
93	SEABED	-390.25	-42.67	0.00	494.27	0.571	0.000	213.29	0.00	0.00	0.00	0.00	0.00
94	SEABED	-396.30	-42.67	0.00	500.32	0.571	0.000	213.29	0.00	0.00	0.00	0.00	0.00
95	SEABED	-402.35	-42.67	0.00	506.37	0.571	0.000	213.29	0.00	0.00	0.00	0.00	0.00
96	SEABED	-408.39	-42.67	0.00	512.42	0.571	0.000	213.29	0.00	0.00	0.00	0.00	0.00
97	SEABED	-414.44	-42.67	0.00	518.47	0.571	0.000	213.29	0.00	0.00	0.00	0.00	0.00
98	SEABED	-420.49	-42.67	0.00	524.52	0.571	0.000	213.29	0.00	0.00	0.00	0.00	0.00
99	SEABED	-426.54	-42.67	0.00	530.57	0.571	0.000	213.29	0.00	0.00	0.00	0.00	0.00
100	SEABED	-432.59	-42.67	0.00	536.62	0.571	0.000	213.29	0.00	0.00	0.00	0.00	0.00
101	SEABED	-438.64	-42.67	0.00	542.67	0.571	0.000	213.29	0.00	0.00	0.00	0.00	0.00
102	SEABED	-444.69	-42.67	0.00	548.72	0.571	0.000	213.29	0.00	0.00	0.00	0.00	0.00
103	SEABED	-450.74	-42.67	0.00	554.77	0.571	0.000	213.29	0.00	0.00	0.00	0.00	0.00
104	SEABED	-456.79	-42.67	0.00	560.82	0.571	0.000	213.29	0.00	0.00	0.00	0.00	0.00

S T A T I C P I P E C O O R D I N A T E S, F O R C E S A N D S T R E S S E S

NODE NO.	PIPE SECTION	X COORD (M)	Y COORD (M)	VERT ANGLE (DEG)	PIPE LENGTH (M)	SUPPORT REACTION (KN)	SEPARA -TION (M)	AXIAL TENSION (KN)	BENDING MOMENT (KN-M)	TENSILE STRESS (MPA)	BENDING STRESS (MPA)	TOTAL STRESS (MPA)	PERCNT YIELD (PCT)
105	SEABED	-462.84	-42.67	0.00	566.87	0.571	0.000	213.29	0.00	0.00	0.00	0.00	0.00
106	SEABED	-468.89	-42.67	0.00	572.91	0.571	0.000	213.29	0.00	0.00	0.00	0.00	0.00
107	SEABED	-474.94	-42.67	0.00	578.96	0.571	0.000	213.29	0.00	0.00	0.00	0.00	0.00
108	SEABED	-480.98	-42.67	0.00	585.01	0.571	0.000	213.29	0.00	0.00	0.00	0.00	0.00
109	SEABED	-487.03	-42.67	0.00	591.06	0.571	0.000	213.29	0.00	0.00	0.00	0.00	0.00
110	SEABED	-493.08	-42.67	0.00	597.11	0.571	0.000	213.29	0.00	0.00	0.00	0.00	0.00
111	SEABED	-499.13	-42.67	0.00	603.16	0.571	0.000	213.29	0.00	0.00	0.00	0.00	0.00
112	SEABED	-505.18	-42.67	0.00	609.21	0.571	0.000	213.29	0.00	0.00	0.00	0.00	0.00
113	SEABED	-511.23	-42.67	0.00	615.26	0.571	0.000	213.29	0.00	0.00	0.00	0.00	0.00
114	SEABED	-517.28	-42.67	0.00	621.31	0.571	0.000	213.29	0.00	0.00	0.00	0.00	0.00
115	SEABED	-523.33	-42.67	0.00	627.36	0.571	0.000	213.29	0.00	0.00	0.00	0.00	0.00
116	SEABED	-529.38	-42.67	0.00	633.41	0.571	0.000	213.29	0.00	0.00	0.00	0.00	0.00
117	SEABED	-535.43	-42.67	0.00	639.46	0.571	0.000	213.29	0.00	0.00	0.00	0.00	0.00
118	SEABED	-541.48	-42.67	0.00	645.50	0.571	0.000	213.29	0.00	0.00	0.00	0.00	0.00
119	SEABED	-547.53	-42.67	0.00	651.55	0.571	0.000	213.29	0.00	0.00	0.00	0.00	0.00
120	SEABED	-553.58	-42.67	0.00	657.60	0.571	0.000	213.29	0.00	0.00	0.00	0.00	0.00
121	SEABED	-559.62	-42.67	0.00	663.65	0.571	0.000	213.29	0.00	0.00	0.00	0.00	0.00
122	SEABED	-565.67	-42.67	0.00	669.70	0.571	0.000	213.29	0.00	0.00	0.00	0.00	0.00
123	SEABED	-571.72	-42.67	0.00	675.75	0.571	0.000	213.29	0.00	0.00	0.00	0.00	0.00
124	SEABED	-577.77	-42.67	0.00	681.80	0.571	0.000	213.29	0.00	0.00	0.00	0.00	0.00
125	SEABED	-583.82	-42.67	0.00	687.85	0.571	0.000	213.29	0.00	0.00	0.00	0.00	0.00
126	SEABED	-589.87	-42.67	0.00	693.90	0.571	0.000	213.29	0.00	0.00	0.00	0.00	0.00
127	SEABED	-595.92	-42.67	0.00	699.95	0.571	0.000	213.29	0.00	0.00	0.00	0.00	0.00
128	SEABED	-601.97	-42.67	0.00	706.00	0.571	0.000	213.29	0.00	0.00	0.00	0.00	0.00
129	SEABED	-608.02	-42.67	0.00	712.05	0.571	0.000	213.29	0.00	0.00	0.00	0.00	0.00
130	SEABED	-614.07	-42.67	0.00	718.09	0.571	0.000	213.29	0.00	0.00	0.00	0.00	0.00
131	SEABED	-620.12	-42.67	0.00	724.14	0.571	0.000	213.29	0.00	0.00	0.00	0.00	0.00
132	SEABED	-626.17	-42.67	0.00	730.19	0.571	0.000	213.29	0.00	0.00	0.00	0.00	0.00
133	SEABED	-632.21	-42.67	0.00	736.24	0.571	0.000	213.29	0.00	0.00	0.00	0.00	0.00
134	SEABED	-638.26	-42.67	0.00	742.29	0.571	0.000	213.29	0.00	0.00	0.00	0.00	0.00
135	SEABED	-644.31	-42.67	0.00	748.34	0.571	0.000	213.29	0.00	0.00	0.00	0.00	0.00
136	SEABED	-650.36	-42.67	0.00	754.39	0.571	0.000	213.29	0.00	0.00	0.00	0.00	0.00
137	SEABED	-656.41	-42.67	0.00	760.44	0.571	0.000	213.29	0.00	0.00	0.00	0.00	0.00
138	SEABED	-662.46	-42.67	0.00	766.49	0.571	0.000	213.29	0.00	0.00	0.00	0.00	0.00
139	SEABED	-668.51	-42.67	0.00	772.54	0.571	0.000	213.29	0.00	0.00	0.00	0.00	0.00
140	SEABED	-674.56	-42.67	0.00	778.59	0.571	0.000	213.29	0.00	0.00	0.00	0.00	0.00
141	SEABED	-680.61	-42.67	0.00	784.64	0.571	0.000	213.29	0.00	0.00	0.00	0.00	0.00
142	SEABED	-686.66	-42.67	0.00	790.68	0.571	0.000	213.29	0.00	0.00	0.00	0.00	0.00
143	SEABED	-692.71	-42.67	0.00	796.73	0.571	0.000	213.29	0.00	0.00	0.00	0.00	0.00
144	SEABED	-698.76	-42.67	0.00	802.78	0.571	0.000	213.29	0.00	0.00	0.00	0.00	0.00
145	SEABED	-704.80	-42.67	0.00	808.83	0.571	0.000	213.29	0.00	0.00	0.00	0.00	0.00
146	SEABED	-710.85	-42.67	0.00	814.88	0.571	0.000	213.29	0.00	0.00	0.00	0.00	0.00
147	SEABED	-716.90	-42.67	0.00	820.93	0.571	0.000	213.29	0.00	0.00	0.00	0.00	0.00
148	SEABED	-722.95	-42.67	0.00	826.98	0.571	0.000	213.29	0.00	0.00	0.00	0.00	0.00
149	SEABED	-729.00	-42.67	0.00	833.03	0.571	0.000	213.29	0.00	0.00	0.00	0.00	0.00

S T A T I C P I P E C O O R D I N A T E S, F O R C E S A N D S T R E S S E S

NODE NO.	PIPE SECTION	X COORD (M)	Y COORD (M)	VERT ANGLE (DEG)	PIPE LENGTH (M)	SUPPORT REACTION (KN)	SEPARA -TION (M)	AXIAL TENSION (KN)	BENDING MOMENT (KN-M)	TENSILE STRESS (MPA)	BENDING STRESS (MPA)	TOTAL STRESS (MPA)	PERCNT YIELD (PCT)
150	SEABED	-735.05	-42.67	0.00	839.08	0.571	0.000	213.29	0.00	0.00	0.00	0.00	0.00
151	SEABED	-741.10	-42.67	0.00	845.13	0.571	0.000	213.29	0.00	0.00	0.00	0.00	0.00
152	SEABED	-747.15	-42.67	0.00	851.18	0.570	0.000	213.29	0.00	0.00	0.00	0.00	0.00
153	SEABED	-753.20	-42.67	0.00	857.23	0.563	0.000	213.29	0.00	0.00	0.00	0.00	0.00
154	SEABED	-759.25	-42.67	-0.01	863.27	0.410	0.000	213.29	0.00	0.00	0.00	0.00	0.00
155	SEABED	-762.64	-42.67	-0.02	866.66	0.216	0.000	213.29	0.00	0.00	0.00	0.00	0.00
156	SEABED	-766.03	-42.67	-0.07	870.06	0.000	0.000	213.29	0.00	0.00	0.00	0.00	0.00

S T A T I C P I P E C O O R D I N A T E S, F O R C E S A N D S T R E S S E S

NODE NO.	PIPE SECTION	X COORD (M)	Y COORD (M)	VERT ANGLE (DEG)	PIPE LENGTH (M)	SUPPORT REACTION (KN)	SEPARA -TION (M)	AXIAL TENSION (KN)	BENDING MOMENT (KN-M)	TENSILE STRESS (MPA)	BENDING STRESS (MPA)	TOTAL STRESS (MPA)	PERCNT YIELD (PCT)
1	LAYBARGE	96.31	6.41	1.93	0.00	9.947	0.000	0.00	2.75	0.00	4.25	4.25	1.18
3	LAYBARGE	84.28	6.05	1.58	12.04	24.040	0.000	-0.73	-19.04	-0.07	-29.48	29.55	8.21
5	LAYBARGE	73.45	5.73	1.91	22.87	24.746	0.000	-1.40	-30.13	-0.13	-46.65	46.79	13.00
7	TENSIONR	60.11	5.24	2.28	36.23	30.971	0.000	266.42	-21.36	25.65	-33.06	58.71	16.31
9	LAYBARGE	51.10	4.87	2.21	45.24	0.000	0.000	265.70	23.60	25.58	36.53	62.11	17.25
10	LAYBARGE	46.45	4.70	2.02	49.89	14.718	0.000	265.38	4.96	25.55	7.69	33.24	9.23
12	LAYBARGE	35.36	4.31	2.25	60.99	23.921	0.000	264.52	-42.46	25.47	-65.74	91.21	25.34
14	LAYBARGE	23.34	3.62	4.98	73.04	56.715	0.000	262.41	-174.32	25.27	-269.87	295.14	81.98
16	LAYBARGE	19.27	3.21	6.53	77.13	0.000	0.000	262.09	-115.54	25.24	-178.88	204.12	56.70
17	LAYBARGE	8.90	1.76	9.66	87.60	22.062	0.000	258.76	-172.87	24.92	-267.64	292.55	81.26
19	LAYBARGE	4.93	1.01	11.67	91.64	0.000	0.000	256.89	-221.30	24.74	-342.60	367.34	102.04
20	LAYBARGE	3.12	0.62	12.82	93.49	56.443	0.000	255.62	-263.39	24.61	-407.77	432.38	120.11
24	STINGER	-7.51	-2.35	17.88	104.53	22.794	0.000	253.04	-157.51	24.23	-243.85	268.21	74.50
26	STINGER	-16.14	-5.38	20.66	113.67	13.258	0.000	250.29	-110.92	23.80	-171.72	195.81	54.39
29	STINGER	-25.30	-9.06	23.26	123.55	29.473	0.000	246.52	-127.74	23.22	-197.77	221.48	61.52
31	STINGER	-35.25	-13.59	25.25	134.48	14.784	0.000	242.32	-47.32	22.56	-73.26	96.57	26.82
33	STINGER	-37.96	-14.87	25.47	137.48	0.000	0.402	241.08	-12.00	22.37	-18.58	41.77	11.60
35	SAGBEND	-43.30	-17.41	25.28	143.40	0.000	0.000	238.52	32.96	21.98	51.03	73.97	20.55
36	SAGBEND	-48.79	-19.97	24.55	149.45	0.000	0.000	235.92	58.40	21.59	90.42	113.10	31.42
37	SAGBEND	-54.31	-22.43	23.53	155.50	0.000	0.000	233.42	72.79	21.20	112.69	135.12	37.53
38	SAGBEND	-59.89	-24.79	22.33	161.55	0.000	0.000	231.03	81.29	20.84	125.84	148.04	41.12
39	SAGBEND	-65.51	-27.02	21.02	167.60	0.000	0.000	228.78	86.62	20.50	134.09	156.07	43.35
40	SAGBEND	-71.18	-29.13	19.65	173.65	0.000	0.000	226.66	90.22	20.17	139.67	161.44	44.84
41	SAGBEND	-76.90	-31.09	18.23	179.70	0.000	0.000	224.69	92.85	19.87	143.74	165.32	45.92
42	SAGBEND	-82.67	-32.91	16.77	185.75	0.000	0.000	222.87	94.90	19.59	146.92	168.32	46.75
43	SAGBEND	-88.49	-34.58	15.28	191.80	0.000	0.000	221.19	96.57	19.34	149.50	170.74	47.43
44	SAGBEND	-94.34	-36.10	13.78	197.85	0.000	0.000	219.67	97.95	19.11	151.64	172.73	47.98
45	SAGBEND	-100.24	-37.46	12.25	203.90	0.000	0.000	218.30	99.05	18.90	153.35	174.31	48.42
46	SAGBEND	-106.17	-38.66	10.70	209.95	0.000	0.000	217.10	99.84	18.71	154.56	175.40	48.72
47	SAGBEND	-112.12	-39.71	9.15	216.00	0.000	0.000	216.05	100.18	18.55	155.09	175.83	48.84
48	SAGBEND	-118.11	-40.59	7.60	222.05	0.000	0.000	215.17	99.86	18.42	154.60	175.25	48.68
49	SAGBEND	-124.12	-41.31	6.06	228.10	0.000	0.000	214.46	98.47	18.31	152.44	173.02	48.06
50	SAGBEND	-130.14	-41.87	4.56	234.15	0.000	0.000	213.92	95.25	18.23	147.46	167.99	46.66
51	SAGBEND	-136.18	-42.27	3.12	240.20	0.000	0.000	213.54	88.87	18.17	137.58	158.08	43.91
52	SAGBEND	-142.22	-42.53	1.83	246.25	0.000	0.000	213.32	76.91	18.13	119.07	139.55	38.76
53	SAGBEND	-148.27	-42.67	0.79	252.30	1.361	0.000	213.25	54.99	18.12	85.14	105.64	29.34
54	SEABED	-154.32	-42.71	0.18	258.35	6.770	0.000	213.29	24.37	18.12	37.73	58.30	16.19
55	SEABED	-160.37	-42.72	-0.04	264.39	7.899	0.000	213.30	6.39	18.12	9.89	30.58	8.49
56	SEABED	-166.42	-42.71	-0.09	270.44	6.720	0.000	213.30	2.06	18.12	3.20	23.96	6.65
57	SEABED	-172.47	-42.70	-0.13	276.49	4.049	0.000	213.30	2.64	18.12	4.08	24.83	6.90
58	SEABED	-176.10	-42.69	-0.15	280.13	2.027	0.000	213.30	0.59	18.12	0.92	21.71	6.03

59	SEABED	-180.33	-42.67	-0.05	284.36	0.683	0.000	213.30	0.10	0.00	0.00	0.00	0.00

S T A T I C P I P E C O O R D I N A T E S, F O R C E S A N D S T R E S S E S

NODE NO.	PIPE SECTION	X COORD (M)	Y COORD (M)	VERT ANGLE (DEG)	PIPE LENGTH (M)	SUPPORT REACTION (KN)	SEPARA -TION (M)	AXIAL TENSION (KN)	BENDING MOMENT (KN-M)	TENSILE STRESS (MPA)	BENDING STRESS (MPA)	TOTAL STRESS (MPA)	PERCNT YIELD (PCT)
60	SEABED	-184.57	-42.67	-0.02	288.59	0.171	0.000	213.30	0.02	0.00	0.00	0.00	0.00
61	SEABED	-190.62	-42.67	0.00	294.64	0.044	0.000	213.30	0.00	0.00	0.00	0.00	0.00
62	SEABED	-196.67	-42.67	0.00	300.69	0.019	0.000	213.30	0.00	0.00	0.00	0.00	0.00
63	SEABED	-202.72	-42.67	0.00	306.74	0.016	0.000	213.30	0.00	0.00	0.00	0.00	0.00
64	SEABED	-208.77	-42.67	0.00	312.79	0.016	0.000	213.30	0.00	0.00	0.00	0.00	0.00
65	SEABED	-214.82	-42.67	0.00	318.84	0.016	0.000	213.30	0.00	0.00	0.00	0.00	0.00
66	SEABED	-220.87	-42.67	0.00	324.89	0.016	0.000	213.30	0.00	0.00	0.00	0.00	0.00
67	SEABED	-226.92	-42.67	0.00	330.94	0.016	0.000	213.30	0.00	0.00	0.00	0.00	0.00
68	SEABED	-232.96	-42.67	0.00	336.99	0.016	0.000	213.30	0.00	0.00	0.00	0.00	0.00
69	SEABED	-239.01	-42.67	0.00	343.04	0.016	0.000	213.30	0.00	0.00	0.00	0.00	0.00
70	SEABED	-245.06	-42.67	0.00	349.09	0.016	0.000	213.30	0.00	0.00	0.00	0.00	0.00
71	SEABED	-251.11	-42.67	0.00	355.14	0.016	0.000	213.30	0.00	0.00	0.00	0.00	0.00
72	SEABED	-257.16	-42.67	0.00	361.19	0.016	0.000	213.30	0.00	0.00	0.00	0.00	0.00
73	SEABED	-263.21	-42.67	0.00	367.24	0.016	0.000	213.30	0.00	0.00	0.00	0.00	0.00
74	SEABED	-269.26	-42.67	0.00	373.29	0.016	0.000	213.30	0.00	0.00	0.00	0.00	0.00
75	SEABED	-275.31	-42.67	0.00	379.34	0.016	0.000	213.30	0.00	0.00	0.00	0.00	0.00
76	SEABED	-281.36	-42.67	0.00	385.39	0.016	0.000	213.30	0.00	0.00	0.00	0.00	0.00
77	SEABED	-287.41	-42.67	0.00	391.44	0.016	0.000	213.30	0.00	0.00	0.00	0.00	0.00
78	SEABED	-293.46	-42.67	0.00	397.49	0.016	0.000	213.30	0.00	0.00	0.00	0.00	0.00
79	SEABED	-299.51	-42.67	0.00	403.54	0.016	0.000	213.30	0.00	0.00	0.00	0.00	0.00
80	SEABED	-305.56	-42.67	0.00	409.58	0.016	0.000	213.30	0.00	0.00	0.00	0.00	0.00
81	SEABED	-311.61	-42.67	0.00	415.63	0.016	0.000	213.30	0.00	0.00	0.00	0.00	0.00
82	SEABED	-317.66	-42.67	0.00	421.68	0.016	0.000	213.30	0.00	0.00	0.00	0.00	0.00
83	SEABED	-323.71	-42.67	0.00	427.73	0.016	0.000	213.30	0.00	0.00	0.00	0.00	0.00
84	SEABED	-329.76	-42.67	0.00	433.78	0.016	0.000	213.30	0.00	0.00	0.00	0.00	0.00
85	SEABED	-335.81	-42.67	0.00	439.83	0.016	0.000	213.30	0.00	0.00	0.00	0.00	0.00
86	SEABED	-341.86	-42.67	0.00	445.88	0.016	0.000	213.30	0.00	0.00	0.00	0.00	0.00
87	SEABED	-347.91	-42.67	0.00	451.93	0.016	0.000	213.30	0.00	0.00	0.00	0.00	0.00
88	SEABED	-353.96	-42.67	0.00	457.98	0.016	0.000	213.30	0.00	0.00	0.00	0.00	0.00
89	SEABED	-360.00	-42.67	0.00	464.03	0.017	0.000	213.30	0.00	0.00	0.00	0.00	0.00
90	SEABED	-366.05	-42.67	0.00	470.08	0.026	0.000	213.30	0.00	0.00	0.00	0.00	0.00
91	SEABED	-372.10	-42.67	0.01	476.13	0.067	0.000	213.30	0.00	0.00	0.00	0.00	0.00
92	SEABED	-376.08	-42.67	0.03	480.11	0.196	0.000	213.30	0.00	0.00	0.00	0.00	0.00
93	SEABED	-380.14	-42.67	0.01	484.17	0.333	0.000	213.30	0.00	0.00	0.00	0.00	0.00
94	SEABED	-384.20	-42.67	0.00	488.23	0.465	0.000	213.30	0.00	0.00	0.00	0.00	0.00
95	SEABED	-390.25	-42.67	0.00	494.28	0.569	0.000	213.30	0.00	0.00	0.00	0.00	0.00
96	SEABED	-396.30	-42.67	0.00	500.33	0.571	0.000	213.30	0.00	0.00	0.00	0.00	0.00
97	SEABED	-402.35	-42.67	0.00	506.38	0.571	0.000	213.30	0.00	0.00	0.00	0.00	0.00
98	SEABED	-408.40	-42.67	0.00	512.43	0.571	0.000	213.30	0.00	0.00	0.00	0.00	0.00
99	SEABED	-414.45	-42.67	0.00	518.47	0.571	0.000	213.30	0.00	0.00	0.00	0.00	0.00
100	SEABED	-420.50	-42.67	0.00	524.52	0.571	0.000	213.30	0.00	0.00	0.00	0.00	0.00
101	SEABED	-426.55	-42.67	0.00	530.57	0.571	0.000	213.30	0.00	0.00	0.00	0.00	0.00
102	SEABED	-432.60	-42.67	0.00	536.62	0.571	0.000	213.30	0.00	0.00	0.00	0.00	0.00
103	SEABED	-438.65	-42.67	0.00	542.67	0.571	0.000	213.30	0.00	0.00	0.00	0.00	0.00
104	SEABED	-444.69	-42.67	0.00	548.72	0.571	0.000	213.30	0.00	0.00	0.00	0.00	0.00

S T A T I C P I P E C O O R D I N A T E S, F O R C E S A N D S T R E S S E S

NODE NO.	PIPE SECTION	X COORD (M)	Y COORD (M)	VERT ANGLE (DEG)	PIPE LENGTH (M)	SUPPORT REACTION (KN)	SEPARA -TION (M)	AXIAL TENSION (KN)	BENDING MOMENT (KN-M)	TENSILE STRESS (MPA)	BENDING STRESS (MPA)	TOTAL STRESS (MPA)	PERCNT YIELD (PCT)
105	SEABED	-450.74	-42.67	0.00	554.77	0.571	0.000	213.30	0.00	0.00	0.00	0.00	0.00
106	SEABED	-456.79	-42.67	0.00	560.82	0.571	0.000	213.30	0.00	0.00	0.00	0.00	0.00
107	SEABED	-462.84	-42.67	0.00	566.87	0.571	0.000	213.30	0.00	0.00	0.00	0.00	0.00
108	SEABED	-468.89	-42.67	0.00	572.92	0.571	0.000	213.30	0.00	0.00	0.00	0.00	0.00
109	SEABED	-474.94	-42.67	0.00	578.97	0.571	0.000	213.30	0.00	0.00	0.00	0.00	0.00
110	SEABED	-480.99	-42.67	0.00	585.02	0.571	0.000	213.30	0.00	0.00	0.00	0.00	0.00
111	SEABED	-487.04	-42.67	0.00	591.06	0.571	0.000	213.30	0.00	0.00	0.00	0.00	0.00
112	SEABED	-493.09	-42.67	0.00	597.11	0.571	0.000	213.30	0.00	0.00	0.00	0.00	0.00
113	SEABED	-499.14	-42.67	0.00	603.16	0.571	0.000	213.30	0.00	0.00	0.00	0.00	0.00
114	SEABED	-505.19	-42.67	0.00	609.21	0.571	0.000	213.30	0.00	0.00	0.00	0.00	0.00
115	SEABED	-511.24	-42.67	0.00	615.26	0.571	0.000	213.30	0.00	0.00	0.00	0.00	0.00
116	SEABED	-517.29	-42.67	0.00	621.31	0.571	0.000	213.30	0.00	0.00	0.00	0.00	0.00
117	SEABED	-523.33	-42.67	0.00	627.36	0.571	0.000	213.30	0.00	0.00	0.00	0.00	0.00
118	SEABED	-529.38	-42.67	0.00	633.41	0.571	0.000	213.30	0.00	0.00	0.00	0.00	0.00
119	SEABED	-535.43	-42.67	0.00	639.46	0.571	0.000	213.30	0.00	0.00	0.00	0.00	0.00
120	SEABED	-541.48	-42.67	0.00	645.51	0.571	0.000	213.30	0.00	0.00	0.00	0.00	0.00
121	SEABED	-547.53	-42.67	0.00	651.56	0.571	0.000	213.30	0.00	0.00	0.00	0.00	0.00
122	SEABED	-553.58	-42.67	0.00	657.61	0.571	0.000	213.30	0.00	0.00	0.00	0.00	0.00
123	SEABED	-559.63	-42.67	0.00	663.66	0.571	0.000	213.30	0.00	0.00	0.00	0.00	0.00
124	SEABED	-565.68	-42.67	0.00	669.70	0.571	0.000	213.30	0.00	0.00	0.00	0.00	0.00
125	SEABED	-571.73	-42.67	0.00	675.75	0.571	0.000	213.30	0.00	0.00	0.00	0.00	0.00
126	SEABED	-577.78	-42.67	0.00	681.80	0.571	0.000	213.30	0.00	0.00	0.00	0.00	0.00
127	SEABED	-583.83	-42.67	0.00	687.85	0.571	0.000	213.30	0.00	0.00	0.00	0.00	0.00
128	SEABED	-589.88	-42.67	0.00	693.90	0.571	0.000	213.30	0.00	0.00	0.00	0.00	0.00
129	SEABED	-595.93	-42.67	0.00	699.95	0.571	0.000	213.30	0.00	0.00	0.00	0.00	0.00
130	SEABED	-601.97	-42.67	0.00	706.00	0.571	0.000	213.30	0.00	0.00	0.00	0.00	0.00
131	SEABED	-608.02	-42.67	0.00	712.05	0.571	0.000	213.30	0.00	0.00	0.00	0.00	0.00
132	SEABED	-614.07	-42.67	0.00	718.10	0.571	0.000	213.30	0.00	0.00	0.00	0.00	0.00
133	SEABED	-620.12	-42.67	0.00	724.15	0.571	0.000	213.30	0.00	0.00	0.00	0.00	0.00
134	SEABED	-626.17	-42.67	0.00	730.20	0.571	0.000	213.30	0.00	0.00	0.00	0.00	0.00
135	SEABED	-632.22	-42.67	0.00	736.25	0.571	0.000	213.30	0.00	0.00	0.00	0.00	0.00
136	SEABED	-638.27	-42.67	0.00	742.30	0.571	0.000	213.30	0.00	0.00	0.00	0.00	0.00
137	SEABED	-644.32	-42.67	0.00	748.34	0.571	0.000	213.30	0.00	0.00	0.00	0.00	0.00
138	SEABED	-650.37	-42.67	0.00	754.39	0.571	0.000	213.30	0.00	0.00	0.00	0.00	0.00
139	SEABED	-656.42	-42.67	0.00	760.44	0.571	0.000	213.30	0.00	0.00	0.00	0.00	0.00
140	SEABED	-662.47	-42.67	0.00	766.49	0.571	0.000	213.30	0.00	0.00	0.00	0.00	0.00
141	SEABED	-668.52	-42.67	0.00	772.54	0.571	0.000	213.30	0.00	0.00	0.00	0.00	0.00
142	SEABED	-674.57	-42.67	0.00	778.59	0.571	0.000	213.30	0.00	0.00	0.00	0.00	0.00
143	SEABED	-680.61	-42.67	0.00	784.64	0.571	0.000	213.30	0.00	0.00	0.00	0.00	0.00
144	SEABED	-686.66	-42.67	0.00	790.69	0.571	0.000	213.30	0.00	0.00	0.00	0.00	0.00
145	SEABED	-692.71	-42.67	0.00	796.74	0.571	0.000	213.30	0.00	0.00	0.00	0.00	0.00
146	SEABED	-698.76	-42.67	0.00	802.79	0.571	0.000	213.30	0.00	0.00	0.00	0.00	0.00
147	SEABED	-704.81	-42.67	0.00	808.84	0.571	0.000	213.30	0.00	0.00	0.00	0.00	0.00
148	SEABED	-710.86	-42.67	0.00	814.89	0.571	0.000	213.30	0.00	0.00	0.00	0.00	0.00
149	SEABED	-716.91	-42.67	0.00	820.94	0.571	0.000	213.30	0.00	0.00	0.00	0.00	0.00

S T A T I C P I P E C O O R D I N A T E S, F O R C E S A N D S T R E S S E S

NODE NO.	PIPE SECTION	X COORD (M)	Y COORD (M)	VERT ANGLE (DEG)	PIPE LENGTH (M)	SUPPORT REACTION (KN)	SEPARA -TION (M)	AXIAL TENSION (KN)	BENDING MOMENT (KN-M)	TENSILE STRESS (MPA)	BENDING STRESS (MPA)	TOTAL STRESS (MPA)	PERCNT YIELD (PCT)
150	SEABED	-722.96	-42.67	0.00	826.98	0.571	0.000	213.30	0.00	0.00	0.00	0.00	0.00
151	SEABED	-729.01	-42.67	0.00	833.03	0.571	0.000	213.30	0.00	0.00	0.00	0.00	0.00
152	SEABED	-735.06	-42.67	0.00	839.08	0.571	0.000	213.30	0.00	0.00	0.00	0.00	0.00
153	SEABED	-741.11	-42.67	0.00	845.13	0.571	0.000	213.30	0.00	0.00	0.00	0.00	0.00
154	SEABED	-747.16	-42.67	0.00	851.18	0.571	0.000	213.30	0.00	0.00	0.00	0.00	0.00
155	SEABED	-753.21	-42.67	0.00	857.23	0.571	0.000	213.30	0.00	0.00	0.00	0.00	0.00
156	SEABED	-759.25	-42.67	0.00	863.28	0.569	0.000	213.30	0.00	0.00	0.00	0.00	0.00
157	SEABED	-765.30	-42.67	0.00	869.33	0.555	0.000	213.30	0.00	0.00	0.00	0.00	0.00
158	SEABED	-771.35	-42.67	-0.01	875.38	0.403	0.000	213.30	0.00	0.00	0.00	0.00	0.00
159	SEABED	-776.03	-42.67	-0.07	880.06	0.000	0.000	213.30	0.00	0.00	0.00	0.00	0.00

LAYDOWN STRAIN

S T A T I C P I P E C O O R D I N A T E S, F O R C E S A N D S T R A I N S

NODE NO.	PIPE SECTION	X COORD (M)	Y COORD (M)	VERT ANGLE (DEG)	PIPE LENGTH (M)	SUPPORT REACTION (KN)	SEPARA -TION (M)	AXIAL TENSION (KN)	BENDING MOMENT (KN-M)	TENSILE STRAIN (PCT)	BENDING STRAIN (PCT)	TOTAL STRAIN (PCT)	PERCNT ALLOW (PCT)
1	LAYBARGE	96.31	6.41	1.69	0.00	0.655	0.000	0.00	0.00	0.0000	0.0000	0.0000	0.00
3	LAYBARGE	84.28	6.05	1.70	12.04	1.244	0.000	-0.04	0.00	0.0000	0.0000	0.0000	0.00
5	LAYBARGE	73.45	5.73	1.89	22.87	1.315	0.000	-0.08	0.00	0.0000	0.0000	0.0000	0.00
7	TENSIONR	60.11	5.24	2.20	36.23	1.865	0.000	289.57	0.00	0.0000	0.0000	0.0000	0.00
9	LAYBARGE	51.10	4.88	2.25	45.24	0.000	0.000	289.54	0.00	0.0000	0.0000	0.0000	0.00
10	LAYBARGE	46.45	4.70	2.32	49.89	2.087	0.000	289.51	0.00	0.0000	0.0000	0.0000	0.00
12	LAYBARGE	38.37	4.35	-0.05	57.99	0.000	0.000	289.22	0.00	0.0135	0.0000	0.0135	0.00
13	LAYBARGE	35.36	4.36	-0.17	60.99	0.000	0.045	289.21	28.33	0.0135	0.0212	0.0346	0.00
15	LAYBARGE	26.34	4.46	-1.07	70.01	0.000	0.000	289.41	28.41	0.0135	0.0212	0.0347	0.00
16	LAYBARGE	23.37	4.52	-1.19	72.98	0.000	0.892	289.54	0.57	0.0135	0.0004	0.0139	0.00
18	LAYBARGE	11.69	4.53	2.69	84.66	0.000	0.000	286.96	-343.38	0.0133	-0.2568	0.2702	0.00
19	LAYBARGE	8.87	4.33	5.82	87.49	151.085	0.000	282.95	-486.25	0.0132	-0.3637	0.3768	0.00
21	LAYBARGE	4.68	3.73	10.08	91.73	0.000	0.000	286.24	-278.93	0.0133	-0.2086	0.2219	0.00

22	LAYBARGE	2.57	3.33	11.37	93.87	0.000	2.758	286.33	-194.01	0.0133	-0.1451	0.1584	0.00
24	LAYBARGE	-7.34	1.07	13.46	104.04	0.000	0.000	282.64	-17.01	0.0131	-0.0127	0.0259	0.00
27	STINGER	-7.97	0.92	13.48	104.69	0.000	1.862	282.34	-14.77	0.0131	-0.0110	0.0242	0.00
29	STINGER	-16.76	-1.21	14.03	113.73	0.000	0.425	279.21	-55.37	0.0130	-0.0414	0.0544	0.00
32	STINGER	-26.39	-3.88	17.96	123.73	72.674	0.000	274.61	-298.35	0.0127	-0.2231	0.2359	0.00
34	STINGER	-36.59	-7.82	23.64	134.67	33.237	0.000	272.01	-173.56	0.0124	-0.1298	0.1425	0.00
36	STINGER	-39.35	-9.06	24.70	137.69	0.000	0.287	271.21	-103.54	0.0124	-0.0774	0.0900	0.00
38	SAGBEND	-46.78	-12.58	25.59	145.91	0.000	0.000	267.93	3.17	0.0121	0.0024	0.0148	0.00
39	SAGBEND	-52.25	-15.18	25.24	151.96	0.000	0.000	265.30	39.02	0.0119	0.0292	0.0415	0.00
40	SAGBEND	-57.73	-17.72	24.47	158.01	0.000	0.000	262.71	58.14	0.0117	0.0435	0.0557	0.00
41	SAGBEND	-63.26	-20.18	23.48	164.06	0.000	0.000	260.23	68.69	0.0116	0.0514	0.0635	0.00
42	SAGBEND	-68.83	-22.54	22.36	170.11	0.000	0.000	257.85	74.82	0.0114	0.0560	0.0679	0.00
43	SAGBEND	-74.45	-24.78	21.17	176.16	0.000	0.000	255.60	78.65	0.0112	0.0588	0.0707	0.00
44	SAGBEND	-80.12	-26.91	19.92	182.21	0.000	0.000	253.47	81.27	0.0111	0.0608	0.0725	0.00
45	SAGBEND	-85.83	-28.90	18.65	188.26	0.000	0.000	251.47	83.23	0.0109	0.0622	0.0739	0.00
46	SAGBEND	-91.58	-30.77	17.34	194.31	0.000	0.000	249.59	84.82	0.0108	0.0634	0.0750	0.00
47	SAGBEND	-97.38	-32.51	16.02	200.36	0.000	0.000	247.85	86.17	0.0106	0.0644	0.0759	0.00
48	SAGBEND	-103.21	-34.11	14.67	206.41	0.000	0.000	246.25	87.35	0.0105	0.0653	0.0768	0.00
49	SAGBEND	-109.08	-35.57	13.31	212.46	0.000	0.000	244.78	88.38	0.0104	0.0661	0.0775	0.00
50	SAGBEND	-114.98	-36.90	11.93	218.51	0.000	0.000	243.46	89.26	0.0103	0.0668	0.0781	0.00
51	SAGBEND	-120.92	-38.07	10.54	224.56	0.000	0.000	242.28	89.96	0.0102	0.0673	0.0785	0.00
52	SAGBEND	-126.88	-39.11	9.14	230.61	0.000	0.000	241.24	90.40	0.0102	0.0676	0.0788	0.00
53	SAGBEND	-132.86	-40.00	7.74	236.66	0.000	0.000	240.36	90.46	0.0101	0.0677	0.0788	0.00
54	SAGBEND	-138.87	-40.74	6.34	242.71	0.000	0.000	239.62	89.88	0.0100	0.0672	0.0783	0.00
55	SAGBEND	-144.89	-41.33	4.96	248.76	0.000	0.000	239.03	88.20	0.0100	0.0660	0.0771	0.00
56	SAGBEND	-150.92	-41.79	3.61	254.81	0.000	0.000	238.59	84.56	0.0100	0.0632	0.0743	0.00
57	SAGBEND	-156.96	-42.10	2.35	260.86	0.000	0.000	238.31	77.38	0.0099	0.0579	0.0689	0.00
58	SAGBEND	-163.01	-42.29	1.25	266.91	0.055	0.000	238.16	63.65	0.0099	0.0476	0.0587	0.00
59	SEABED	-169.06	-42.37	0.44	272.96	3.552	0.000	238.14	38.48	0.0099	0.0288	0.0398	0.00

S T A T I C P I P E C O O R D I N A T E S, F O R C E S A N D S T R A I N S

NODE NO.	PIPE SECTION	X COORD (M)	Y COORD (M)	VERT ANGLE (DEG)	PIPE LENGTH (M)	SUPPORT REACTION (KN)	SEPARA -TION (M)	AXIAL TENSION (KN)	BENDING MOMENT (KN-M)	TENSILE STRAIN (PCT)	BENDING STRAIN (PCT)	TOTAL STRAIN (PCT)	PERCNT ALLOW (PCT)
60	SEABED	-175.11	-42.40	0.05	279.01	7.377	0.000	238.17	13.30	0.0099	0.0099	0.0211	0.00
61	SEABED	-181.16	-42.39	-0.05	285.06	7.390	0.000	238.17	1.44	0.0099	0.0011	0.0123	0.00
62	SEABED	-187.21	-42.39	-0.04	291.11	6.647	0.000	238.17	-1.48	0.0099	-0.0011	0.0123	0.00
63	SEABED	-193.26	-42.39	-0.02	297.16	6.180	0.000	238.17	-1.18	0.0099	-0.0009	0.0121	0.00
64	SEABED	-199.31	-42.39	0.00	303.21	6.021	0.000	238.17	-0.47	0.0099	-0.0004	0.0115	0.00
65	SEABED	-205.36	-42.39	0.00	309.26	6.005	0.000	238.17	-0.09	0.0099	-0.0001	0.0113	0.00
66	SEABED	-211.41	-42.39	0.00	315.31	6.023	0.000	238.17	0.03	0.0099	0.0000	0.0112	0.00
67	SEABED	-217.46	-42.39	0.00	321.36	6.038	0.000	238.17	0.03	0.0099	0.0000	0.0112	0.00
68	SEABED	-223.51	-42.39	0.00	327.41	6.043	0.000	238.17	0.02	0.0099	0.0000	0.0112	0.00
69	SEABED	-229.56	-42.39	0.00	333.46	6.044	0.000	238.17	0.00	0.0099	0.0000	0.0112	0.00
70	SEABED	-235.61	-42.39	0.00	339.51	6.044	0.000	238.17	0.00	0.0099	0.0000	0.0112	0.00
71	SEABED	-241.66	-42.39	0.00	345.56	6.043	0.000	238.17	0.00	0.0099	0.0000	0.0112	0.00
72	SEABED	-247.71	-42.39	0.00	351.61	6.043	0.000	238.17	0.00	0.0099	0.0000	0.0112	0.00
73	SEABED	-253.76	-42.39	0.00	357.66	0.000	0.000	238.17	0.00	0.0099	0.0000	0.0112	0.00

S T A T I C P I P E C O O R D I N A T E S, F O R C E S A N D S T R A I N S

NODE NO.	PIPE SECTION	X COORD (M)	Y COORD (M)	VERT ANGLE (DEG)	PIPE LENGTH (M)	SUPPORT REACTION (KN)	SEPARA -TION (M)	AXIAL TENSION (KN)	BENDING MOMENT (KN-M)	TENSILE STRAIN (PCT)	BENDING STRAIN (PCT)	TOTAL STRAIN (PCT)	PERCNT ALLOW (PCT)
1	LAYBARGE	96.31	6.41	1.69	0.00	0.655	0.000	0.00	0.00	0.0000	0.0000	0.0000	0.00
3	LAYBARGE	84.28	6.05	1.70	12.04	1.244	0.000	-0.04	0.00	0.0000	0.0000	0.0000	0.00
5	LAYBARGE	73.45	5.73	1.89	22.87	1.315	0.000	-0.08	0.00	0.0000	0.0000	0.0000	0.00
7	TENSIONR	60.11	5.24	1.42	36.23	-2.069	0.000	289.58	0.00	0.0000	0.0000	0.0000	0.00
9	LAYBARGE	51.09	5.12	0.70	45.24	0.000	0.000	289.58	0.00	0.0000	0.0000	0.0000	0.00
10	LAYBARGE	46.46	5.07	0.56	49.88	0.000	0.372	289.58	0.00	0.0000	0.0000	0.0000	0.00
12	LAYBARGE	38.37	5.00	0.43	57.97	0.000	0.000	289.57	0.00	0.0000	0.0000	0.0000	0.00
13	LAYBARGE	35.36	4.99	0.30	60.97	0.000	0.670	289.57	0.00	0.0000	0.0000	0.0000	0.00
15	LAYBARGE	26.36	4.95	0.47	69.98	0.000	0.000	289.56	0.00	0.0135	0.0000	0.0135	0.00
16	LAYBARGE	23.34	4.92	0.51	73.00	0.000	1.298	289.50	-14.37	0.0135	-0.0107	0.0242	0.00
18	LAYBARGE	11.66	4.59	4.14	84.68	0.000	0.000	286.73	-308.74	0.0133	-0.2309	0.2442	0.00
19	LAYBARGE	8.86	4.33	6.93	87.49	137.687	0.000	283.30	-436.27	0.0132	-0.3263	0.3395	0.00
21	LAYBARGE	4.68	3.66	10.73	91.72	0.000	0.000	285.64	-246.04	0.0133	-0.1840	0.1973	0.00
22	LAYBARGE	2.57	3.24	11.87	93.88	0.000	2.674	285.51	-168.04	0.0133	-0.1257	0.1390	0.00
24	LAYBARGE	-7.34	0.94	13.56	104.05	0.000	0.000	281.53	-10.13	0.0131	-0.0076	0.0207	0.00
27	STINGER	-7.95	0.79	13.58	104.68	0.000	1.770	281.23	-8.60	0.0131	-0.0064	0.0195	0.00
29	STINGER	-16.74	-1.35	14.05	113.73	0.000	0.392	278.22	-53.98	0.0129	-0.0404	0.0533	0.00
32	STINGER	-26.37	-4.02	17.95	123.72	72.259	0.000	273.64	-296.79	0.0126	-0.2220	0.2347	0.00
34	STINGER	-36.56	-7.95	23.62	134.65	33.371	0.000	271.02	-173.93	0.0124	-0.1301	0.1427	0.00
36	STINGER	-39.32	-9.19	24.68	137.67	0.000	0.287	270.22	-103.86	0.0123	-0.0777	0.0902	0.00
38	SAGBEND	-46.77	-12.71	25.57	145.91	0.000	0.000	266.94	3.21	0.0121	0.0024	0.0148	0.00
39	SAGBEND	-52.23	-15.31	25.21	151.96	0.000	0.000	264.31	39.15	0.0119	0.0293	0.0416	0.00
40	SAGBEND	-57.72	-17.85	24.44	158.01	0.000	0.000	261.73	58.33	0.0117	0.0436	0.0558	0.00
41	SAGBEND	-63.25	-20.31	23.45	164.06	0.000	0.000	259.25	68.93	0.0115	0.0516	0.0636	0.00
42	SAGBEND	-68.82	-22.66	22.33	170.11	0.000	0.000	256.88	75.10	0.0113	0.0562	0.0681	0.00
43	SAGBEND	-74.44	-24.90	21.13	176.16	0.000	0.000	254.63	78.96	0.0112	0.0591	0.0709	0.00
44	SAGBEND	-80.11	-27.02	19.88	182.21	0.000	0.000	252.50	81.59	0.0110	0.0610	0.0727	0.00
45	SAGBEND	-85.82	-29.02	18.60	188.26	0.000	0.000	250.50	83.57	0.0109	0.0625	0.0741	0.00
46	SAGBEND	-91.57	-30.88	17.29	194.31	0.000	0.000	248.63	85.16	0.0107	0.0637	0.0752	0.00
47	SAGBEND	-97.37	-32.61	15.96	200.36	0.000	0.000	246.90	86.52	0.0106	0.0647	0.0762	0.00
48	SAGBEND	-103.21	-34.21	14.61	206.41	0.000	0.000	245.30	87.70	0.0105	0.0656	0.0770	0.00
49	SAGBEND	-109.08	-35.66	13.24	212.46	0.000	0.000	243.84	88.74	0.0104	0.0664	0.0777	0.00
50	SAGBEND	-114.98	-36.98	11.86	218.51	0.000	0.000	242.52	89.62	0.0103	0.0670	0.0783	0.00
51	SAGBEND	-120.92	-38.15	10.46	224.56	0.000	0.000	241.35	90.30	0.0102	0.0675	0.0787	0.00
52	SAGBEND	-126.88	-39.18	9.06	230.61	0.000	0.000	240.32	90.73	0.0101	0.0679	0.0790	0.00
53	SAGBEND	-132.87	-40.05	7.65	236.66	0.000	0.000	239.45	90.74	0.0100	0.0679	0.0790	0.00
54	SAGBEND	-138.87	-40.79	6.25	242.71	0.000	0.000	238.72	90.09	0.0100	0.0674	0.0785	0.00
55	SAGBEND	-144.89	-41.37	4.86	248.76	0.000	0.000	238.14	88.28	0.0099	0.0660	0.0771	0.00
56	SAGBEND	-150.93	-41.81	3.52	254.81	0.000	0.000	237.71	84.42	0.0099	0.0631	0.0742	0.00
57	SAGBEND	-156.97	-42.12	2.26	260.86	0.000	0.000	237.44	76.81	0.0099	0.0574	0.0685	0.00
58	SAGBEND	-163.02	-42.30	1.17	266.91	0.108	0.000	237.30	62.32	0.0099	0.0466	0.0576	0.00
59	SEABED	-169.07	-42.38	0.39	272.96	4.021	0.000	237.29	36.22	0.0099	0.0271	0.0381	0.00

S T A T I C P I P E C O O R D I N A T E S, F O R C E S A N D S T R A I N S

NODE NO.	PIPE SECTION	X COORD (M)	Y COORD (M)	VERT ANGLE (DEG)	PIPE LENGTH (M)	SUPPORT REACTION (KN)	SEPARA -TION (M)	AXIAL TENSION (KN)	BENDING MOMENT (KN-M)	TENSILE STRAIN (PCT)	BENDING STRAIN (PCT)	TOTAL STRAIN (PCT)	PERCNT ALLOW (PCT)
60	SEABED	-175.12	-42.40	0.04	279.01	7.473	0.000	237.32	11.90	0.0099	0.0089	0.0200	0.00
61	SEABED	-181.17	-42.39	-0.05	285.06	7.339	0.000	237.32	0.97	0.0099	0.0007	0.0119	0.00
62	SEABED	-187.22	-42.39	-0.04	291.11	6.598	0.000	237.32	-1.52	0.0099	-0.0011	0.0123	0.00
63	SEABED	-193.27	-42.39	-0.01	297.16	6.158	0.000	237.32	-1.13	0.0099	-0.0008	0.0120	0.00
64	SEABED	-199.32	-42.39	0.00	303.21	6.016	0.000	237.32	-0.43	0.0099	-0.0003	0.0115	0.00
65	SEABED	-205.37	-42.39	0.00	309.26	6.006	0.000	237.32	-0.07	0.0099	-0.0001	0.0112	0.00
66	SEABED	-211.42	-42.39	0.00	315.31	6.025	0.000	237.32	0.03	0.0099	0.0000	0.0112	0.00
67	SEABED	-217.47	-42.39	0.00	321.36	6.038	0.000	237.32	0.03	0.0099	0.0000	0.0112	0.00
68	SEABED	-223.52	-42.39	0.00	327.41	6.043	0.000	237.32	0.01	0.0099	0.0000	0.0112	0.00
69	SEABED	-229.57	-42.39	0.00	333.46	6.044	0.000	237.32	0.00	0.0099	0.0000	0.0112	0.00
70	SEABED	-235.62	-42.39	0.00	339.51	6.044	0.000	237.32	0.00	0.0099	0.0000	0.0112	0.00
71	SEABED	-241.67	-42.39	0.00	345.56	6.043	0.000	237.32	0.00	0.0099	0.0000	0.0112	0.00
72	SEABED	-247.72	-42.39	0.00	351.61	6.043	0.000	237.32	0.00	0.0099	0.0000	0.0112	0.00
73	SEABED	-253.77	-42.39	0.00	357.66	0.000	0.000	237.32	0.00	0.0099	0.0000	0.0112	0.00

S T A T I C P I P E C O O R D I N A T E S, F O R C E S A N D S T R A I N S

NODE NO.	PIPE SECTION	X COORD (M)	Y COORD (M)	VERT ANGLE (DEG)	PIPE LENGTH (M)	SUPPORT REACTION (KN)	SEPARA -TION (M)	AXIAL TENSION (KN)	BENDING MOMENT (KN-M)	TENSILE STRAIN (PCT)	BENDING STRAIN (PCT)	TOTAL STRAIN (PCT)	PERCNT ALLOW (PCT)
1	LAYBARGE	96.31	6.41	1.69	0.00	0.655	0.000	0.00	0.00	0.0000	0.0000	0.0000	0.00
3	LAYBARGE	84.28	6.05	1.70	12.04	1.244	0.000	-0.04	0.00	0.0000	0.0000	0.0000	0.00
5	LAYBARGE	73.45	5.73	1.89	22.87	1.315	0.000	-0.08	0.00	0.0000	0.0000	0.0000	0.00
7	TENSIONR	60.11	5.24	1.41	36.23	-2.125	0.000	289.58	0.00	0.0000	0.0000	0.0000	0.00
9	LAYBARGE	51.09	5.13	0.67	45.24	0.000	0.000	289.58	0.00	0.0000	0.0000	0.0000	0.00
10	LAYBARGE	46.44	5.08	0.53	49.89	0.000	0.377	289.58	0.00	0.0000	0.0000	0.0000	0.00
12	LAYBARGE	38.35	5.01	0.40	57.99	0.000	0.000	289.57	0.00	0.0000	0.0000	0.0000	0.00
13	LAYBARGE	35.36	4.99	0.28	60.97	0.000	0.680	289.57	0.00	0.0000	0.0000	0.0000	0.00
15	LAYBARGE	26.34	4.96	0.15	69.99	0.000	0.000	289.57	0.00	0.0000	0.0000	0.0000	0.00
16	LAYBARGE	23.36	4.96	0.01	72.98	0.000	1.332	289.57	0.00	0.0000	0.0000	0.0000	0.00
18	LAYBARGE	11.85	4.97	11.89	84.51	0.000	0.000	283.15	0.00	0.0132	0.0000	0.0132	0.00

19	LAYBARGE	8.85	4.32	12.66	87.58	107.446	0.000	280.97	-169.38	0.0131	-0.1267	0.1398	0.00
21	LAYBARGE	4.74	3.34	14.10	91.81	0.000	0.000	279.74	-76.96	0.0130	-0.0576	0.0706	0.00
22	LAYBARGE	2.52	2.77	14.42	94.10	0.000	2.232	278.71	-34.37	0.0130	-0.0257	0.0387	0.00
24	LAYBARGE	-7.33	0.25	14.12	104.27	0.000	0.000	273.65	25.90	0.0127	0.0194	0.0321	0.00
27	STINGER	-7.90	0.10	14.08	104.86	0.000	1.292	273.36	24.05	0.0127	0.0180	0.0307	0.00
29	STINGER	-16.70	-2.09	14.18	113.93	0.000	0.220	271.03	-46.61	0.0125	-0.0349	0.0475	0.00
32	STINGER	-26.31	-4.76	17.91	123.91	70.126	0.000	266.53	-289.56	0.0123	-0.2166	0.2290	0.00
34	STINGER	-36.52	-8.68	23.53	134.84	34.080	0.000	263.80	-176.39	0.0120	-0.1319	0.1442	0.00
36	STINGER	-39.27	-9.91	24.61	137.86	0.000	0.286	263.02	-105.83	0.0120	-0.0792	0.0914	0.00
38	SAGBEND	-46.42	-13.28	25.53	145.77	0.000	0.000	259.90	-0.03	0.0117	0.0000	0.0121	0.00
39	SAGBEND	-51.89	-15.88	25.20	151.82	0.000	0.000	257.28	38.15	0.0115	0.0285	0.0405	0.00
40	SAGBEND	-57.38	-18.42	24.44	157.87	0.000	0.000	254.69	58.70	0.0113	0.0439	0.0557	0.00
41	SAGBEND	-62.91	-20.88	23.43	163.92	0.000	0.000	252.21	70.12	0.0112	0.0524	0.0642	0.00
42	SAGBEND	-68.48	-23.23	22.29	169.97	0.000	0.000	249.84	76.79	0.0110	0.0574	0.0690	0.00
43	SAGBEND	-74.10	-25.46	21.06	176.02	0.000	0.000	247.59	80.97	0.0108	0.0606	0.0721	0.00
44	SAGBEND	-79.77	-27.57	19.78	182.07	0.000	0.000	245.47	83.82	0.0107	0.0627	0.0741	0.00
45	SAGBEND	-85.49	-29.56	18.46	188.12	0.000	0.000	243.48	85.94	0.0105	0.0643	0.0756	0.00
46	SAGBEND	-91.25	-31.40	17.12	194.17	0.000	0.000	241.63	87.64	0.0104	0.0655	0.0768	0.00
47	SAGBEND	-97.05	-33.12	15.75	200.22	0.000	0.000	239.91	89.07	0.0103	0.0666	0.0777	0.00
48	SAGBEND	-102.89	-34.69	14.36	206.27	0.000	0.000	238.34	90.30	0.0101	0.0675	0.0786	0.00
49	SAGBEND	-108.77	-36.12	12.95	212.32	0.000	0.000	236.91	91.36	0.0100	0.0683	0.0793	0.00
50	SAGBEND	-114.68	-37.40	11.52	218.37	0.000	0.000	235.63	92.23	0.0099	0.0690	0.0799	0.00
51	SAGBEND	-120.63	-38.53	10.09	224.42	0.000	0.000	234.49	92.86	0.0099	0.0695	0.0803	0.00
52	SAGBEND	-126.60	-39.52	8.64	230.47	0.000	0.000	233.50	93.15	0.0098	0.0697	0.0805	0.00
53	SAGBEND	-132.59	-40.35	7.20	236.52	0.000	0.000	232.67	92.91	0.0097	0.0695	0.0803	0.00
54	SAGBEND	-138.60	-41.03	5.77	242.57	0.000	0.000	232.00	91.77	0.0097	0.0686	0.0794	0.00
55	SAGBEND	-144.63	-41.57	4.36	248.62	0.000	0.000	231.47	89.08	0.0096	0.0666	0.0774	0.00
56	SAGBEND	-150.66	-41.96	3.02	254.67	0.000	0.000	231.11	83.62	0.0096	0.0625	0.0733	0.00
57	SAGBEND	-156.71	-42.21	1.79	260.71	0.000	0.000	230.89	73.15	0.0096	0.0547	0.0654	0.00
58	SAGBEND	-162.76	-42.34	0.80	266.76	1.074	0.000	230.81	53.52	0.0096	0.0400	0.0507	0.00
59	SEABED	-168.81	-42.39	0.19	272.81	6.271	0.000	230.84	24.45	0.0096	0.0183	0.0290	0.00

S T A T I C P I P E C O O R D I N A T E S, F O R C E S A N D S T R A I N S

NODE NO.	PIPE SECTION	X COORD (M)	Y COORD (M)	VERT ANGLE (DEG)	PIPE LENGTH (M)	SUPPORT REACTION (KN)	SEPARA -TION (M)	AXIAL TENSION (KN)	BENDING MOMENT (KN-M)	TENSILE STRAIN (PCT)	BENDING STRAIN (PCT)	TOTAL STRAIN (PCT)	PERCNT ALLOW (PCT)
60	SEABED	-174.86	-42.40	-0.02	278.86	7.676	0.000	230.85	5.69	0.0096	0.0043	0.0151	0.00
61	SEABED	-180.91	-42.39	-0.05	284.91	7.023	0.000	230.85	-0.83	0.0096	-0.0006	0.0115	0.00
62	SEABED	-186.96	-42.39	-0.03	290.96	6.363	0.000	230.85	-1.54	0.0096	-0.0012	0.0120	0.00
63	SEABED	-193.01	-42.39	-0.01	297.01	6.068	0.000	230.85	-0.81	0.0096	-0.0006	0.0115	0.00
64	SEABED	-199.05	-42.39	0.00	303.06	6.001	0.000	230.85	-0.23	0.0096	-0.0002	0.0110	0.00
65	SEABED	-205.10	-42.39	0.00	309.11	6.012	0.000	230.85	0.00	0.0096	0.0000	0.0109	0.00
66	SEABED	-211.15	-42.39	0.00	315.16	6.032	0.000	230.85	0.04	0.0096	0.0000	0.0109	0.00
67	SEABED	-217.20	-42.39	0.00	321.21	6.041	0.000	230.85	0.03	0.0096	0.0000	0.0109	0.00
68	SEABED	-223.25	-42.39	0.00	327.26	6.044	0.000	230.85	0.01	0.0096	0.0000	0.0109	0.00
69	SEABED	-229.30	-42.39	0.00	333.31	6.044	0.000	230.85	0.00	0.0096	0.0000	0.0109	0.00
70	SEABED	-235.35	-42.39	0.00	339.36	6.044	0.000	230.85	0.00	0.0096	0.0000	0.0109	0.00
71	SEABED	-241.40	-42.39	0.00	345.41	6.043	0.000	230.85	0.00	0.0096	0.0000	0.0109	0.00
72	SEABED	-247.45	-42.39	0.00	351.46	6.043	0.000	230.85	0.00	0.0096	0.0000	0.0109	0.00
73	SEABED	-253.50	-42.39	0.00	357.51	6.043	0.000	230.85	0.00	0.0096	0.0000	0.0109	0.00
74	SEABED	-259.55	-42.39	0.00	363.56	0.000	0.000	230.85	0.00	0.0096	0.0000	0.0109	0.00

S T A T I C P I P E C O O R D I N A T E S, F O R C E S A N D S T R A I N S

NODE NO.	PIPE SECTION	X COORD (M)	Y COORD (M)	VERT ANGLE (DEG)	PIPE LENGTH (M)	SUPPORT REACTION (KN)	SEPARA -TION (M)	AXIAL TENSION (KN)	BENDING MOMENT (KN-M)	TENSILE STRAIN (PCT)	BENDING STRAIN (PCT)	TOTAL STRAIN (PCT)	PERCNT ALLOW (PCT)
1	LAYBARGE	96.31	6.41	1.69	0.00	0.655	0.000	0.00	0.00	0.0000	0.0000	0.0000	0.00
3	LAYBARGE	84.28	6.05	1.70	12.04	1.244	0.000	-0.04	0.00	0.0000	0.0000	0.0000	0.00
5	LAYBARGE	73.45	5.73	1.89	22.87	1.315	0.000	-0.08	0.00	0.0000	0.0000	0.0000	0.00
7	TENSIONR	60.11	5.24	1.77	36.23	-0.289	0.000	289.58	0.00	0.0000	0.0000	0.0000	0.00
9	LAYBARGE	51.09	5.01	1.40	45.24	0.000	0.000	289.55	0.00	0.0000	0.0000	0.0000	0.00
10	LAYBARGE	46.44	4.91	1.26	49.89	0.000	0.203	289.54	0.00	0.0000	0.0000	0.0000	0.00
12	LAYBARGE	38.35	4.74	1.13	57.99	0.000	0.000	289.52	0.00	0.0000	0.0000	0.0000	0.00
13	LAYBARGE	35.35	4.68	1.01	60.99	0.000	0.366	289.52	0.00	0.0000	0.0000	0.0000	0.00
15	LAYBARGE	26.32	4.53	0.88	70.02	0.000	0.000	289.50	0.00	0.0000	0.0000	0.0000	0.00
16	LAYBARGE	23.34	4.49	0.74	73.00	0.000	0.866	289.50	0.00	0.0000	0.0000	0.0000	0.00
18	LAYBARGE	11.84	4.36	0.58	84.50	0.000	0.000	289.48	0.00	0.0000	0.0000	0.0000	0.00
19	LAYBARGE	8.88	4.33	16.95	87.47	96.425	0.000	277.59	0.00	0.0129	0.0000	0.0129	0.00
21	LAYBARGE	4.83	3.10	16.68	91.71	0.000	0.000	275.08	45.36	0.0128	0.0339	0.0467	0.00
22	LAYBARGE	2.56	2.43	16.35	94.07	0.000	1.892	273.70	59.46	0.0127	0.0445	0.0572	0.00
24	LAYBARGE	-7.23	-0.28	14.67	104.24	0.000	0.000	268.55	51.94	0.0125	0.0388	0.0513	0.00
27	STINGER	-7.84	-0.44	14.59	104.86	0.000	0.921	268.40	48.02	0.0125	0.0359	0.0484	0.00
29	STINGER	-16.66	-2.69	14.33	113.97	0.000	0.086	266.18	-37.93	0.0123	-0.0284	0.0407	0.00
32	STINGER	-26.24	-5.36	17.88	123.92	68.406	0.000	261.75	-282.25	0.0120	-0.2111	0.2233	0.00
34	STINGER	-36.45	-9.26	23.44	134.85	34.652	0.000	258.94	-177.73	0.0118	-0.1329	0.1450	0.00
36	STINGER	-39.21	-10.49	24.53	137.87	0.000	0.287	258.16	-106.95	0.0117	-0.0800	0.0920	0.00
38	SAGBEND	-46.29	-13.82	25.46	145.69	0.000	0.000	255.10	-0.95	0.0115	-0.0007	0.0126	0.00
39	SAGBEND	-51.76	-16.41	25.14	151.74	0.000	0.000	252.48	38.17	0.0113	0.0285	0.0403	0.00
40	SAGBEND	-57.25	-18.94	24.37	157.79	0.000	0.000	249.90	59.35	0.0111	0.0444	0.0560	0.00
41	SAGBEND	-62.78	-21.39	23.35	163.84	0.000	0.000	247.42	71.19	0.0109	0.0532	0.0647	0.00
42	SAGBEND	-68.36	-23.74	22.18	169.89	0.000	0.000	245.05	78.13	0.0107	0.0584	0.0698	0.00
43	SAGBEND	-73.99	-25.96	20.94	175.94	0.000	0.000	242.82	82.49	0.0106	0.0617	0.0730	0.00
44	SAGBEND	-79.66	-28.06	19.63	181.99	0.000	0.000	240.71	85.47	0.0104	0.0639	0.0751	0.00
45	SAGBEND	-85.38	-30.02	18.29	188.04	0.000	0.000	238.74	87.68	0.0103	0.0656	0.0767	0.00
46	SAGBEND	-91.15	-31.85	16.91	194.09	0.000	0.000	236.90	89.44	0.0101	0.0669	0.0779	0.00
47	SAGBEND	-96.96	-33.54	15.52	200.14	0.000	0.000	235.21	90.91	0.0100	0.0680	0.0789	0.00
48	SAGBEND	-102.81	-35.09	14.10	206.19	0.000	0.000	233.66	92.16	0.0099	0.0689	0.0798	0.00
49	SAGBEND	-108.69	-36.49	12.66	212.24	0.000	0.000	232.26	93.22	0.0098	0.0697	0.0805	0.00
50	SAGBEND	-114.61	-37.74	11.21	218.29	0.000	0.000	231.00	94.06	0.0097	0.0704	0.0811	0.00
51	SAGBEND	-120.56	-38.84	9.74	224.34	0.000	0.000	229.90	94.62	0.0096	0.0708	0.0814	0.00
52	SAGBEND	-126.53	-39.79	8.27	230.39	0.000	0.000	228.96	94.77	0.0096	0.0709	0.0815	0.00
53	SAGBEND	-132.53	-40.58	6.81	236.44	0.000	0.000	228.17	94.25	0.0095	0.0705	0.0811	0.00
54	SAGBEND	-138.55	-41.22	5.35	242.49	0.000	0.000	227.53	92.61	0.0095	0.0693	0.0798	0.00
55	SAGBEND	-144.58	-41.71	3.94	248.54	0.000	0.000	227.06	89.03	0.0094	0.0666	0.0771	0.00
56	SAGBEND	-150.62	-42.05	2.61	254.59	0.000	0.000	226.74	81.97	0.0094	0.0613	0.0718	0.00
57	SAGBEND	-156.66	-42.27	1.43	260.64	0.010	0.000	226.58	68.65	0.0094	0.0513	0.0619	0.00
58	SEABED	-162.71	-42.37	0.54	266.69	2.791	0.000	226.54	44.09	0.0094	0.0330	0.0435	0.00
59	SEABED	-168.76	-42.40	0.08	272.74	7.279	0.000	226.57	16.45	0.0094	0.0123	0.0229	0.00

S T A T I C P I P E C O O R D I N A T E S, F O R C E S A N D S T R A I N S

NODE NO.	PIPE SECTION	X COORD (M)	Y COORD (M)	VERT ANGLE (DEG)	PIPE LENGTH (M)	SUPPORT REACTION (KN)	SEPARA -TION (M)	AXIAL TENSION (KN)	BENDING MOMENT (KN-M)	TENSILE STRAIN (PCT)	BENDING STRAIN (PCT)	TOTAL STRAIN (PCT)	PERCNT ALLOW (PCT)
60	SEABED	-174.81	-42.40	-0.04	278.79	7.554	0.000	226.58	2.36	0.0094	0.0018	0.0124	0.00
61	SEABED	-180.86	-42.39	-0.04	284.84	6.766	0.000	226.58	-1.48	0.0094	-0.0011	0.0118	0.00
62	SEABED	-186.91	-42.39	-0.02	290.89	6.223	0.000	226.58	-1.35	0.0094	-0.0010	0.0117	0.00
63	SEABED	-192.96	-42.39	0.00	296.94	6.026	0.000	226.58	-0.58	0.0094	-0.0004	0.0111	0.00
64	SEABED	-199.01	-42.39	0.00	302.99	6.000	0.000	226.58	-0.12	0.0094	-0.0001	0.0107	0.00
65	SEABED	-205.06	-42.39	0.00	309.04	6.019	0.000	226.58	0.03	0.0094	0.0000	0.0107	0.00
66	SEABED	-211.11	-42.39	0.00	315.09	6.036	0.000	226.58	0.04	0.0094	0.0000	0.0107	0.00
67	SEABED	-217.16	-42.39	0.00	321.14	6.043	0.000	226.58	0.02	0.0094	0.0000	0.0107	0.00
68	SEABED	-223.21	-42.39	0.00	327.19	6.044	0.000	226.58	0.01	0.0094	0.0000	0.0107	0.00
69	SEABED	-229.26	-42.39	0.00	333.24	6.044	0.000	226.58	0.00	0.0094	0.0000	0.0107	0.00
70	SEABED	-235.31	-42.39	0.00	339.29	6.043	0.000	226.58	0.00	0.0094	0.0000	0.0107	0.00
71	SEABED	-241.36	-42.39	0.00	345.34	6.043	0.000	226.58	0.00	0.0094	0.0000	0.0107	0.00
72	SEABED	-247.41	-42.39	0.00	351.39	6.043	0.000	226.58	0.00	0.0094	0.0000	0.0107	0.00
73	SEABED	-253.46	-42.39	0.00	357.44	0.000	0.000	226.58	0.00	0.0094	0.0000	0.0107	0.00

S T A T I C P I P E C O O R D I N A T E S, F O R C E S A N D S T R A I N S

NODE NO.	PIPE SECTION	X COORD (M)	Y COORD (M)	VERT ANGLE (DEG)	PIPE LENGTH (M)	SUPPORT REACTION (KN)	SEPARA -TION (M)	AXIAL TENSION (KN)	BENDING MOMENT (KN-M)	TENSILE STRAIN (PCT)	BENDING STRAIN (PCT)	TOTAL STRAIN (PCT)	PERCNT ALLOW (PCT)
1	LAYBARGE	96.31	6.41	1.69	0.00	0.655	0.000	0.00	0.00	0.0000	0.0000	0.0000	0.00
3	LAYBARGE	84.28	6.05	1.70	12.04	1.244	0.000	-0.04	0.00	0.0000	0.0000	0.0000	0.00
5	LAYBARGE	73.45	5.73	1.89	22.87	1.315	0.000	-0.08	0.00	0.0000	0.0000	0.0000	0.00
7	TENSIONR	60.11	5.24	1.78	36.23	-0.168	0.000	276.98	0.00	0.0000	0.0000	0.0000	0.00
9	LAYBARGE	51.09	5.01	1.42	45.24	0.000	0.000	276.95	0.00	0.0000	0.0000	0.0000	0.00
10	LAYBARGE	46.44	4.90	1.27	49.89	0.000	0.199	276.94	0.00	0.0000	0.0000	0.0000	0.00
12	LAYBARGE	38.35	4.73	1.14	57.99	0.000	0.000	276.92	0.00	0.0000	0.0000	0.0000	0.00
13	LAYBARGE	35.35	4.67	1.01	60.99	0.000	0.359	276.92	0.00	0.0000	0.0000	0.0000	0.00

15	LAYBARGE	26.32	4.53	0.87	70.02	0.000	0.000	276.90	0.00	0.0000	0.0000	0.0000	0.00
16	LAYBARGE	23.35	4.48	0.73	72.99	0.000	0.860	276.90	0.00	0.0000	0.0000	0.0000	0.00
18	LAYBARGE	11.85	4.35	0.56	84.50	0.000	0.000	276.88	0.00	0.0000	0.0000	0.0000	0.00
19	LAYBARGE	8.88	4.33	16.98	87.48	93.256	0.000	265.43	0.00	0.0123	0.0000	0.0123	0.00
21	LAYBARGE	4.82	3.10	16.71	91.71	0.000	0.000	262.92	45.90	0.0122	0.0343	0.0466	0.00
22	LAYBARGE	2.59	2.44	16.39	94.05	0.000	1.889	261.55	60.02	0.0122	0.0449	0.0571	0.00
24	LAYBARGE	-7.21	-0.28	14.69	104.21	0.000	0.000	256.40	51.93	0.0119	0.0388	0.0508	0.00
27	STINGER	-7.79	-0.44	14.61	104.82	0.000	0.916	256.25	47.99	0.0119	0.0359	0.0478	0.00
29	STINGER	-16.61	-2.69	14.39	113.92	0.000	0.079	254.02	-40.82	0.0117	-0.0305	0.0423	0.00
32	STINGER	-26.20	-5.39	18.07	123.88	68.618	0.000	249.48	-289.41	0.0115	-0.2164	0.2280	0.00
34	STINGER	-36.39	-9.34	23.81	134.82	34.517	0.000	246.67	-182.72	0.0112	-0.1367	0.1481	0.00
36	STINGER	-39.14	-10.58	24.93	137.84	0.000	0.281	245.89	-111.02	0.0111	-0.0830	0.0945	0.00
38	SAGBEND	-46.22	-13.98	25.92	145.69	0.000	0.000	242.78	-1.97	0.0109	-0.0015	0.0128	0.00
39	SAGBEND	-51.67	-16.61	25.60	151.74	0.000	0.000	240.11	38.81	0.0107	0.0290	0.0402	0.00
40	SAGBEND	-57.14	-19.19	24.81	157.79	0.000	0.000	237.49	61.26	0.0105	0.0458	0.0568	0.00
41	SAGBEND	-62.66	-21.68	23.75	163.84	0.000	0.000	234.96	74.02	0.0103	0.0554	0.0663	0.00
42	SAGBEND	-68.22	-24.06	22.54	169.89	0.000	0.000	232.56	81.63	0.0102	0.0611	0.0718	0.00
43	SAGBEND	-73.83	-26.32	21.23	175.94	0.000	0.000	230.29	86.48	0.0100	0.0647	0.0754	0.00
44	SAGBEND	-79.50	-28.44	19.86	181.99	0.000	0.000	228.15	89.82	0.0098	0.0672	0.0778	0.00
45	SAGBEND	-85.21	-30.42	18.45	188.04	0.000	0.000	226.16	92.30	0.0097	0.0690	0.0795	0.00
46	SAGBEND	-90.97	-32.27	17.00	194.09	0.000	0.000	224.31	94.28	0.0096	0.0705	0.0809	0.00
47	SAGBEND	-96.78	-33.96	15.53	200.14	0.000	0.000	222.61	95.92	0.0094	0.0717	0.0821	0.00
48	SAGBEND	-102.63	-35.51	14.03	206.19	0.000	0.000	221.06	97.29	0.0093	0.0728	0.0830	0.00
49	SAGBEND	-108.52	-36.89	12.51	212.24	0.000	0.000	219.67	98.42	0.0092	0.0736	0.0838	0.00
50	SAGBEND	-114.44	-38.13	10.98	218.29	0.000	0.000	218.44	99.25	0.0091	0.0742	0.0844	0.00
51	SAGBEND	-120.40	-39.20	9.43	224.34	0.000	0.000	217.37	99.69	0.0090	0.0746	0.0846	0.00
52	SAGBEND	-126.38	-40.11	7.89	230.39	0.000	0.000	216.46	99.53	0.0090	0.0744	0.0845	0.00
53	SAGBEND	-132.38	-40.86	6.35	236.44	0.000	0.000	215.71	98.42	0.0089	0.0736	0.0836	0.00
54	SAGBEND	-138.40	-41.45	4.84	242.49	0.000	0.000	215.13	95.69	0.0089	0.0716	0.0815	0.00
55	SAGBEND	-144.44	-41.88	3.40	248.54	0.000	0.000	214.72	90.17	0.0088	0.0674	0.0774	0.00
56	SAGBEND	-150.48	-42.17	2.07	254.59	0.000	0.000	214.48	79.73	0.0088	0.0596	0.0696	0.00
57	SAGBEND	-156.53	-42.33	0.97	260.64	0.590	0.000	214.38	60.52	0.0088	0.0453	0.0552	0.00
58	SEABED	-162.58	-42.39	0.26	266.69	5.750	0.000	214.40	30.00	0.0088	0.0224	0.0324	0.00
59	SEABED	-168.63	-42.40	-0.01	272.74	7.835	0.000	214.42	7.86	0.0088	0.0059	0.0159	0.00

S T A T I C P I P E C O O R D I N A T E S, F O R C E S A N D S T R A I N S

NODE NO.	PIPE SECTION	X COORD (M)	Y COORD (M)	VERT ANGLE (DEG)	PIPE LENGTH (M)	SUPPORT REACTION (KN)	SEPARA -TION (M)	AXIAL TENSION (KN)	BENDING MOMENT (KN-M)	TENSILE STRAIN (PCT)	BENDING STRAIN (PCT)	TOTAL STRAIN (PCT)	PERCNT ALLOW (PCT)
60	SEABED	-174.68	-42.39	-0.05	278.79	7.219	0.000	214.42	-0.51	0.0088	-0.0004	0.0105	0.00
61	SEABED	-180.73	-42.39	-0.03	284.84	6.454	0.000	214.42	-1.74	0.0088	-0.0013	0.0114	0.00
62	SEABED	-186.78	-42.39	-0.01	290.89	6.088	0.000	214.42	-1.00	0.0088	-0.0007	0.0108	0.00
63	SEABED	-192.83	-42.39	0.00	296.94	5.997	0.000	214.42	-0.31	0.0088	-0.0002	0.0103	0.00
64	SEABED	-198.88	-42.39	0.00	302.99	6.006	0.000	214.42	-0.01	0.0088	0.0000	0.0101	0.00
65	SEABED	-204.93	-42.39	0.00	309.04	6.028	0.000	214.42	0.05	0.0088	0.0000	0.0101	0.00
66	SEABED	-210.98	-42.39	0.00	315.09	6.041	0.000	214.42	0.03	0.0088	0.0000	0.0101	0.00
67	SEABED	-217.03	-42.39	0.00	321.14	6.044	0.000	214.42	0.01	0.0088	0.0000	0.0101	0.00
68	SEABED	-223.08	-42.39	0.00	327.19	6.044	0.000	214.42	0.00	0.0088	0.0000	0.0101	0.00
69	SEABED	-229.13	-42.39	0.00	333.24	6.044	0.000	214.42	0.00	0.0088	0.0000	0.0101	0.00
70	SEABED	-235.18	-42.39	0.00	339.29	6.043	0.000	214.42	0.00	0.0088	0.0000	0.0101	0.00
71	SEABED	-241.23	-42.39	0.00	345.34	6.043	0.000	214.42	0.00	0.0088	0.0000	0.0101	0.00
72	SEABED	-247.28	-42.39	0.00	351.39	6.043	0.000	214.42	0.00	0.0088	0.0000	0.0101	0.00
73	SEABED	-253.33	-42.39	0.00	357.44	0.000	0.000	214.42	0.00	0.0088	0.0000	0.0101	0.00

S T A T I C P I P E C O O R D I N A T E S, F O R C E S A N D S T R A I N S

NODE NO.	PIPE SECTION	X COORD (M)	Y COORD (M)	VERT ANGLE (DEG)	PIPE LENGTH (M)	SUPPORT REACTION (KN)	SEPARA -TION (M)	AXIAL TENSION (KN)	BENDING MOMENT (KN-M)	TENSILE STRAIN (PCT)	BENDING STRAIN (PCT)	TOTAL STRAIN (PCT)	PERCNT ALLOW (PCT)
1	LAYBARGE	96.31	6.41	1.69	0.00	0.655	0.000	0.00	0.00	0.0000	0.0000	0.0000	0.00
3	LAYBARGE	84.28	6.05	1.70	12.04	1.244	0.000	-0.04	0.00	0.0000	0.0000	0.0000	0.00
5	LAYBARGE	73.45	5.73	1.89	22.87	1.315	0.000	-0.08	0.00	0.0000	0.0000	0.0000	0.00
7	TENSIONR	60.11	5.24	1.78	36.23	-0.166	0.000	276.98	0.00	0.0000	0.0000	0.0000	0.00
9	LAYBARGE	51.09	5.01	1.42	45.24	0.000	0.000	276.95	0.00	0.0000	0.0000	0.0000	0.00
10	LAYBARGE	46.44	4.90	1.27	49.89	0.000	0.198	276.94	0.00	0.0000	0.0000	0.0000	0.00
12	LAYBARGE	38.35	4.73	1.14	57.99	0.000	0.000	276.92	0.00	0.0000	0.0000	0.0000	0.00
13	LAYBARGE	35.35	4.67	1.01	60.99	0.000	0.359	276.92	0.00	0.0000	0.0000	0.0000	0.00
15	LAYBARGE	26.33	4.53	0.87	70.02	0.000	0.000	276.90	0.00	0.0000	0.0000	0.0000	0.00
16	LAYBARGE	23.32	4.48	0.73	73.02	0.000	0.859	276.89	0.00	0.0000	0.0000	0.0000	0.00
18	LAYBARGE	11.82	4.35	0.56	84.52	0.000	0.000	276.88	0.00	0.0000	0.0000	0.0000	0.00
19	LAYBARGE	8.88	4.33	8.95	87.47	81.955	0.000	273.79	0.00	0.0000	0.0000	0.0000	0.00
21	LAYBARGE	4.98	3.11	17.39	91.56	0.000	0.000	276.75	0.00	0.0000	0.0000	0.0000	0.00
22	LAYBARGE	2.64	2.38	15.00	94.01	0.000	1.817	276.45	0.00	0.0129	0.0000	0.0129	0.00
24	LAYBARGE	-7.19	-0.20	14.24	104.18	0.000	0.000	271.45	33.11	0.0126	0.0248	0.0374	0.00
27	STINGER	-7.80	-0.36	14.18	104.80	0.000	0.959	271.30	30.44	0.0126	0.0228	0.0354	0.00
29	STINGER	-16.63	-2.57	14.19	113.90	0.000	0.105	269.07	-43.91	0.0124	-0.0328	0.0454	0.00
32	STINGER	-26.23	-5.23	17.83	123.87	68.717	0.000	264.64	-284.27	0.0122	-0.2126	0.2249	0.00
34	STINGER	-36.45	-9.12	23.40	134.81	34.555	0.000	261.86	-177.19	0.0119	-0.1325	0.1447	0.00
36	STINGER	-39.20	-10.35	24.48	137.82	0.000	0.287	261.09	-106.46	0.0119	-0.0796	0.0918	0.00
38	SAGBEND	-46.18	-13.61	25.41	145.52	0.000	0.000	258.08	-1.93	0.0116	-0.0014	0.0134	0.00
39	SAGBEND	-51.65	-16.20	25.10	151.57	0.000	0.000	255.46	37.37	0.0114	0.0279	0.0398	0.00
40	SAGBEND	-57.14	-18.73	24.34	157.62	0.000	0.000	252.89	58.54	0.0113	0.0438	0.0555	0.00
41	SAGBEND	-62.67	-21.18	23.33	163.67	0.000	0.000	250.41	70.32	0.0111	0.0526	0.0642	0.00
42	SAGBEND	-68.25	-23.52	22.18	169.72	0.000	0.000	248.05	77.20	0.0109	0.0577	0.0693	0.00
43	SAGBEND	-73.88	-25.74	20.95	175.77	0.000	0.000	245.81	81.50	0.0107	0.0610	0.0724	0.00
44	SAGBEND	-79.55	-27.84	19.66	181.82	0.000	0.000	243.70	84.43	0.0106	0.0631	0.0745	0.00
45	SAGBEND	-85.27	-29.81	18.34	187.87	0.000	0.000	241.73	86.59	0.0104	0.0648	0.0760	0.00
46	SAGBEND	-91.04	-31.65	16.98	193.92	0.000	0.000	239.89	88.31	0.0103	0.0660	0.0772	0.00
47	SAGBEND	-96.84	-33.35	15.60	199.97	0.000	0.000	238.19	89.76	0.0102	0.0671	0.0782	0.00
48	SAGBEND	-102.69	-34.90	14.20	206.02	0.000	0.000	236.63	91.00	0.0101	0.0681	0.0790	0.00
49	SAGBEND	-108.57	-36.31	12.78	212.07	0.000	0.000	235.22	92.05	0.0099	0.0688	0.0798	0.00
50	SAGBEND	-114.49	-37.58	11.34	218.12	0.000	0.000	233.95	92.90	0.0099	0.0695	0.0803	0.00
51	SAGBEND	-120.43	-38.69	9.90	224.17	0.000	0.000	232.83	93.50	0.0098	0.0699	0.0807	0.00
52	SAGBEND	-126.41	-39.66	8.44	230.22	0.000	0.000	231.87	93.72	0.0097	0.0701	0.0808	0.00
53	SAGBEND	-132.40	-40.47	6.99	236.27	0.000	0.000	231.06	93.35	0.0096	0.0698	0.0805	0.00
54	SAGBEND	-138.42	-41.13	5.55	242.32	0.000	0.000	230.41	91.99	0.0096	0.0688	0.0795	0.00
55	SAGBEND	-144.44	-41.64	4.15	248.37	0.000	0.000	229.91	88.89	0.0096	0.0665	0.0771	0.00
56	SAGBEND	-150.48	-42.01	2.81	254.42	0.000	0.000	229.56	82.72	0.0095	0.0619	0.0725	0.00
57	SAGBEND	-156.53	-42.24	1.61	260.47	0.000	0.000	229.37	70.95	0.0095	0.0531	0.0637	0.00
58	SEABED	-162.58	-42.36	0.66	266.52	1.830	0.000	229.32	48.99	0.0095	0.0366	0.0473	0.00
59	SEABED	-168.63	-42.39	0.13	272.57	6.848	0.000	229.35	20.27	0.0095	0.0152	0.0258	0.00

S T A T I C P I P E C O O R D I N A T E S, F O R C E S A N D S T R A I N S

NODE NO.	PIPE SECTION	X COORD (M)	Y COORD (M)	VERT ANGLE (DEG)	PIPE LENGTH (M)	SUPPORT REACTION (KN)	SEPARA -TION (M)	AXIAL TENSION (KN)	BENDING MOMENT (KN-M)	TENSILE STRAIN (PCT)	BENDING STRAIN (PCT)	TOTAL STRAIN (PCT)	PERCNT ALLOW (PCT)
60	SEABED	-174.68	-42.40	-0.04	278.62	7.632	0.000	229.36	3.88	0.0095	0.0029	0.0137	0.00
61	SEABED	-180.73	-42.39	-0.05	284.67	6.892	0.000	229.36	-1.21	0.0095	-0.0009	0.0117	0.00
62	SEABED	-186.78	-42.39	-0.02	290.72	6.289	0.000	229.36	-1.46	0.0095	-0.0011	0.0119	0.00
63	SEABED	-192.83	-42.39	-0.01	296.77	6.044	0.000	229.36	-0.69	0.0095	-0.0005	0.0113	0.00
64	SEABED	-198.88	-42.39	0.00	302.82	6.000	0.000	229.36	-0.17	0.0095	-0.0001	0.0109	0.00
65	SEABED	-204.93	-42.39	0.00	308.87	6.016	0.000	229.36	0.02	0.0095	0.0000	0.0108	0.00
66	SEABED	-210.98	-42.39	0.00	314.92	6.034	0.000	229.36	0.04	0.0095	0.0000	0.0108	0.00
67	SEABED	-217.03	-42.39	0.00	320.97	6.042	0.000	229.36	0.02	0.0095	0.0000	0.0108	0.00
68	SEABED	-223.08	-42.39	0.00	327.02	6.044	0.000	229.36	0.01	0.0095	0.0000	0.0108	0.00
69	SEABED	-229.13	-42.39	0.00	333.07	6.044	0.000	229.36	0.00	0.0095	0.0000	0.0108	0.00
70	SEABED	-235.18	-42.39	0.00	339.12	6.044	0.000	229.36	0.00	0.0095	0.0000	0.0108	0.00
71	SEABED	-241.23	-42.39	0.00	345.17	6.043	0.000	229.36	0.00	0.0095	0.0000	0.0108	0.00
72	SEABED	-247.28	-42.39	0.00	351.22	6.043	0.000	229.36	0.00	0.0095	0.0000	0.0108	0.00
73	SEABED	-253.33	-42.39	0.00	357.27	0.000	0.000	229.36	0.00	0.0095	0.0000	0.0108	0.00

S T A T I C P I P E C O O R D I N A T E S, F O R C E S A N D S T R A I N S

NODE NO.	PIPE SECTION	X COORD (M)	Y COORD (M)	VERT ANGLE (DEG)	PIPE LENGTH (M)	SUPPORT REACTION (KN)	SEPARA -TION (M)	AXIAL TENSION (KN)	BENDING MOMENT (KN-M)	TENSILE STRAIN (PCT)	BENDING STRAIN (PCT)	TOTAL STRAIN (PCT)	PERCNT ALLOW (PCT)
1	LAYBARGE	96.31	6.41	1.69	0.00	0.655	0.000	0.00	0.00	0.0000	0.0000	0.0000	0.00
3	LAYBARGE	84.28	6.05	1.70	12.04	1.244	0.000	-0.04	0.00	0.0000	0.0000	0.0000	0.00
5	LAYBARGE	73.45	5.73	1.89	22.87	1.315	0.000	-0.08	0.00	0.0000	0.0000	0.0000	0.00
7	TENSIONR	60.11	5.24	1.79	36.23	-0.105	0.000	270.67	0.00	0.0000	0.0000	0.0000	0.00
9	LAYBARGE	51.09	5.01	1.43	45.24	0.000	0.000	270.65	0.00	0.0000	0.0000	0.0000	0.00
10	LAYBARGE	46.44	4.90	1.28	49.89	0.000	0.196	270.63	0.00	0.0000	0.0000	0.0000	0.00

12	LAYBARGE	38.35	4.73	1.14	57.99	0.000	0.000	270.61	0.00	0.0000	0.0000	0.0000	0.00
13	LAYBARGE	35.35	4.67	1.01	60.99	0.000	0.355	270.61	0.00	0.0000	0.0000	0.0000	0.00
15	LAYBARGE	26.33	4.52	0.87	70.02	0.000	0.000	270.59	0.00	0.0000	0.0000	0.0000	0.00
16	LAYBARGE	23.34	4.48	0.72	73.00	0.000	0.856	270.59	0.00	0.0000	0.0000	0.0000	0.00
18	LAYBARGE	11.84	4.35	0.55	84.50	0.000	0.000	270.57	0.00	0.0000	0.0000	0.0000	0.00
19	LAYBARGE	8.87	4.33	11.87	87.48	107.299	0.000	265.06	0.00	0.0000	0.0000	0.0000	0.00
21	LAYBARGE	5.11	2.71	23.23	91.58	0.000	0.000	270.40	0.00	0.0000	0.0000	0.0000	0.00
22	LAYBARGE	2.69	1.67	21.41	94.22	0.000	1.136	270.16	0.00	0.0126	0.0000	0.0126	0.00
24	LAYBARGE	-6.79	-2.00	20.83	104.39	0.000	0.000	264.79	25.32	0.0123	0.0189	0.0313	0.00
27	STINGER	-7.54	-2.28	20.78	105.19	0.000	0.123	264.51	22.85	0.0122	0.0171	0.0294	0.00
29	STINGER	-16.10	-5.51	20.86	114.33	16.467	0.000	261.26	-43.01	0.0120	-0.0322	0.0443	0.00
32	STINGER	-25.27	-9.11	21.99	124.18	17.074	0.000	257.60	-69.59	0.0117	-0.0520	0.0640	0.00
34	STINGER	-35.35	-13.35	23.77	135.12	29.159	0.000	253.29	-89.24	0.0114	-0.0667	0.0785	0.00
36	STINGER	-38.10	-14.58	24.27	138.13	0.000	0.387	252.21	-42.71	0.0113	-0.0319	0.0437	0.00
38	SAGBEND	-44.84	-17.64	24.35	145.53	0.000	0.000	249.18	25.46	0.0111	0.0190	0.0306	0.00
39	SAGBEND	-50.36	-20.10	23.72	151.58	0.000	0.000	246.66	53.20	0.0109	0.0398	0.0512	0.00
40	SAGBEND	-55.92	-22.49	22.76	157.63	0.000	0.000	244.24	68.54	0.0107	0.0513	0.0626	0.00
41	SAGBEND	-61.52	-24.78	21.62	163.68	0.000	0.000	241.92	77.36	0.0106	0.0579	0.0691	0.00
42	SAGBEND	-67.17	-26.95	20.38	169.73	0.000	0.000	239.74	82.72	0.0104	0.0619	0.0730	0.00
43	SAGBEND	-72.87	-28.99	19.07	175.78	0.000	0.000	237.68	86.23	0.0103	0.0645	0.0755	0.00
44	SAGBEND	-78.61	-30.90	17.71	181.83	0.000	0.000	235.77	88.72	0.0101	0.0664	0.0773	0.00
45	SAGBEND	-84.39	-32.67	16.32	187.88	0.000	0.000	233.99	90.62	0.0100	0.0678	0.0786	0.00
46	SAGBEND	-90.22	-34.30	14.90	193.93	0.000	0.000	232.36	92.15	0.0099	0.0689	0.0797	0.00
47	SAGBEND	-96.08	-35.78	13.46	199.98	0.000	0.000	230.87	93.41	0.0098	0.0699	0.0806	0.00
48	SAGBEND	-101.98	-37.11	12.00	206.03	0.000	0.000	229.54	94.43	0.0097	0.0706	0.0813	0.00
49	SAGBEND	-107.92	-38.29	10.53	212.08	0.000	0.000	228.35	95.18	0.0096	0.0712	0.0818	0.00
50	SAGBEND	-113.88	-39.32	9.05	218.13	0.000	0.000	227.32	95.56	0.0095	0.0715	0.0820	0.00
51	SAGBEND	-119.86	-40.20	7.57	224.18	0.000	0.000	226.45	95.41	0.0094	0.0714	0.0819	0.00
52	SAGBEND	-125.87	-40.92	6.10	230.23	0.000	0.000	225.74	94.37	0.0094	0.0706	0.0811	0.00
53	SAGBEND	-131.89	-41.49	4.65	236.28	0.000	0.000	225.18	91.83	0.0093	0.0687	0.0791	0.00
54	SAGBEND	-137.93	-41.90	3.26	242.33	0.000	0.000	224.78	86.64	0.0093	0.0648	0.0752	0.00
55	SAGBEND	-143.97	-42.18	1.99	248.38	0.000	0.000	224.54	76.70	0.0093	0.0574	0.0678	0.00
56	SAGBEND	-150.02	-42.33	0.93	254.43	0.627	0.000	224.45	58.17	0.0093	0.0435	0.0539	0.00
57	SEABED	-156.07	-42.39	0.25	260.48	5.735	0.000	224.47	28.68	0.0093	0.0214	0.0319	0.00
58	SEABED	-162.12	-42.40	-0.01	266.53	7.740	0.000	224.49	7.50	0.0093	0.0056	0.0161	0.00
59	SEABED	-168.17	-42.39	-0.05	272.58	7.162	0.000	224.49	-0.47	0.0093	-0.0004	0.0109	0.00

S T A T I C P I P E C O O R D I N A T E S, F O R C E S A N D S T R A I N S

NODE NO.	PIPE SECTION	X COORD (M)	Y COORD (M)	VERT ANGLE (DEG)	PIPE LENGTH (M)	SUPPORT REACTION (KN)	SEPARA -TION (M)	AXIAL TENSION (KN)	BENDING MOMENT (KN-M)	TENSILE STRAIN (PCT)	BENDING STRAIN (PCT)	TOTAL STRAIN (PCT)	PERCNT ALLOW (PCT)
60	SEABED	-174.22	-42.39	-0.03	278.63	6.437	0.000	224.49	-1.64	0.0093	-0.0012	0.0118	0.00
61	SEABED	-180.27	-42.39	-0.01	284.68	6.088	0.000	224.49	-0.94	0.0093	-0.0007	0.0113	0.00
62	SEABED	-186.32	-42.39	0.00	290.73	6.001	0.000	224.49	-0.29	0.0093	-0.0002	0.0108	0.00
63	SEABED	-192.37	-42.39	0.00	296.78	6.008	0.000	224.49	-0.01	0.0093	0.0000	0.0106	0.00
64	SEABED	-198.42	-42.39	0.00	302.83	6.029	0.000	224.49	0.04	0.0093	0.0000	0.0106	0.00
65	SEABED	-204.47	-42.39	0.00	308.88	6.041	0.000	224.49	0.03	0.0093	0.0000	0.0106	0.00
66	SEABED	-210.52	-42.39	0.00	314.93	6.044	0.000	224.49	0.01	0.0093	0.0000	0.0106	0.00
67	SEABED	-216.57	-42.39	0.00	320.98	6.044	0.000	224.49	0.00	0.0093	0.0000	0.0106	0.00
68	SEABED	-222.62	-42.39	0.00	327.03	6.044	0.000	224.49	0.00	0.0093	0.0000	0.0106	0.00
69	SEABED	-228.67	-42.39	0.00	333.08	6.043	0.000	224.49	0.00	0.0093	0.0000	0.0106	0.00
70	SEABED	-234.72	-42.39	0.00	339.13	6.043	0.000	224.49	0.00	0.0093	0.0000	0.0106	0.00
71	SEABED	-240.77	-42.39	0.00	345.18	6.043	0.000	224.49	0.00	0.0093	0.0000	0.0106	0.00
72	SEABED	-246.82	-42.39	0.00	351.23	6.043	0.000	224.49	0.00	0.0093	0.0000	0.0106	0.00
73	SEABED	-252.87	-42.39	0.00	357.28	0.000	0.000	224.49	0.00	0.0093	0.0000	0.0106	0.00

S T A T I C P I P E C O O R D I N A T E S, F O R C E S A N D S T R A I N S

NODE NO.	PIPE SECTION	X COORD (M)	Y COORD (M)	VERT ANGLE (DEG)	PIPE LENGTH (M)	SUPPORT REACTION (KN)	SEPARA -TION (M)	AXIAL TENSION (KN)	BENDING MOMENT (KN-M)	TENSILE STRAIN (PCT)	BENDING STRAIN (PCT)	TOTAL STRAIN (PCT)	PERCNT ALLOW (PCT)
1	LAYBARGE	96.31	6.41	1.69	0.00	0.655	0.000	0.00	0.00	0.0000	0.0000	0.0000	0.00
3	LAYBARGE	84.28	6.05	1.70	12.04	1.244	0.000	-0.04	0.00	0.0000	0.0000	0.0000	0.00
5	LAYBARGE	73.45	5.73	1.89	22.87	1.315	0.000	-0.08	0.00	0.0000	0.0000	0.0000	0.00
7	TENSIONR	60.11	5.24	1.79	36.23	-0.085	0.000	270.69	0.00	0.0000	0.0000	0.0000	0.00
9	LAYBARGE	51.09	5.01	1.44	45.24	0.000	0.000	270.66	0.00	0.0000	0.0000	0.0000	0.00

10	LAYBARGE	46.44	4.90	1.29	49.89	0.000	0.194	270.65	0.00	0.0000	0.0000	0.0000	0.00
12	LAYBARGE	38.35	4.72	1.15	57.99	0.000	0.000	270.63	0.00	0.0000	0.0000	0.0000	0.00
13	LAYBARGE	35.35	4.67	1.02	60.99	0.000	0.352	270.63	0.00	0.0000	0.0000	0.0000	0.00
15	LAYBARGE	26.33	4.52	0.88	70.02	0.000	0.000	270.61	0.00	0.0000	0.0000	0.0000	0.00
16	LAYBARGE	23.31	4.47	0.73	73.04	0.000	0.850	270.60	0.00	0.0000	0.0000	0.0000	0.00
18	LAYBARGE	11.80	4.34	0.56	84.54	0.000	0.000	270.59	0.00	0.0000	0.0000	0.0000	0.00
19	LAYBARGE	8.83	4.32	10.84	87.52	97.729	0.000	266.04	0.00	0.0000	0.0000	0.0000	0.00
21	LAYBARGE	5.02	2.84	21.17	91.62	0.000	0.000	270.44	0.00	0.0000	0.0000	0.0000	0.00
22	LAYBARGE	2.59	1.91	21.07	94.21	0.000	1.385	270.33	0.00	0.0000	0.0000	0.0000	0.00
24	LAYBARGE	-6.86	-1.72	20.24	104.34	0.000	0.000	269.95	0.00	0.0125	0.0000	0.0126	0.00
27	STINGER	-7.63	-2.01	20.24	105.16	0.000	0.272	269.66	2.26	0.0125	0.0017	0.0142	0.00
29	STINGER	-16.20	-5.16	20.22	114.30	2.033	0.000	266.51	-13.51	0.0123	-0.0101	0.0225	0.00
32	STINGER	-25.45	-8.66	21.60	124.18	33.930	0.000	262.70	-120.49	0.0120	-0.0901	0.1023	0.00
34	STINGER	-35.53	-12.90	23.92	135.12	23.808	0.000	258.63	-82.23	0.0117	-0.0615	0.0735	0.00
36	STINGER	-38.27	-14.13	24.38	138.12	0.000	0.381	257.52	-37.72	0.0116	-0.0282	0.0402	0.00
38	SAGBEND	-44.97	-17.18	24.40	145.49	0.000	0.000	254.49	26.98	0.0114	0.0202	0.0320	0.00
39	SAGBEND	-50.49	-19.66	23.76	151.54	0.000	0.000	251.97	53.34	0.0112	0.0399	0.0516	0.00
40	SAGBEND	-56.05	-22.05	22.80	157.59	0.000	0.000	249.54	67.84	0.0110	0.0507	0.0623	0.00
41	SAGBEND	-61.65	-24.34	21.68	163.64	0.000	0.000	247.23	76.13	0.0108	0.0569	0.0684	0.00
42	SAGBEND	-67.29	-26.52	20.46	169.69	0.000	0.000	245.04	81.17	0.0107	0.0607	0.0721	0.00
43	SAGBEND	-72.98	-28.57	19.17	175.74	0.000	0.000	242.97	84.47	0.0105	0.0632	0.0745	0.00
44	SAGBEND	-78.72	-30.49	17.84	181.79	0.000	0.000	241.05	86.83	0.0104	0.0649	0.0761	0.00
45	SAGBEND	-84.50	-32.27	16.48	187.84	0.000	0.000	239.26	88.63	0.0102	0.0663	0.0774	0.00
46	SAGBEND	-90.32	-33.92	15.10	193.89	0.000	0.000	237.61	90.10	0.0101	0.0674	0.0784	0.00
47	SAGBEND	-96.18	-35.42	13.69	199.94	0.000	0.000	236.10	91.33	0.0100	0.0683	0.0793	0.00
48	SAGBEND	-102.08	-36.78	12.26	205.99	0.000	0.000	234.74	92.35	0.0099	0.0691	0.0800	0.00
49	SAGBEND	-108.01	-37.99	10.83	212.04	0.000	0.000	233.52	93.13	0.0098	0.0697	0.0805	0.00
50	SAGBEND	-113.96	-39.05	9.38	218.09	0.000	0.000	232.46	93.62	0.0097	0.0700	0.0808	0.00
51	SAGBEND	-119.94	-39.96	7.92	224.14	0.000	0.000	231.55	93.67	0.0097	0.0701	0.0808	0.00
52	SAGBEND	-125.95	-40.72	6.48	230.19	0.000	0.000	230.80	93.00	0.0096	0.0696	0.0803	0.00
53	SAGBEND	-131.96	-41.33	5.05	236.24	0.000	0.000	230.20	91.13	0.0096	0.0682	0.0788	0.00
54	SAGBEND	-138.00	-41.79	3.66	242.29	0.000	0.000	229.76	87.14	0.0095	0.0652	0.0758	0.00
55	SAGBEND	-144.04	-42.10	2.36	248.34	0.000	0.000	229.47	79.34	0.0095	0.0593	0.0700	0.00
56	SAGBEND	-150.09	-42.29	1.23	254.39	0.081	0.000	229.33	64.61	0.0095	0.0483	0.0590	0.00
57	SEABED	-156.13	-42.38	0.42	260.44	3.861	0.000	229.32	38.12	0.0095	0.0285	0.0392	0.00
58	SEABED	-162.18	-42.40	0.04	266.49	7.515	0.000	229.35	12.74	0.0095	0.0095	0.0202	0.00
59	SEABED	-168.23	-42.39	-0.05	272.54	7.408	0.000	229.35	1.12	0.0095	0.0008	0.0116	0.00

S T A T I C P I P E C O O R D I N A T E S, F O R C E S A N D S T R A I N S

NODE NO.	PIPE SECTION	X COORD (M)	Y COORD (M)	VERT ANGLE (DEG)	PIPE LENGTH (M)	SUPPORT REACTION (KN)	SEPARA -TION (M)	AXIAL TENSION (KN)	BENDING MOMENT (KN-M)	TENSILE STRAIN (PCT)	BENDING STRAIN (PCT)	TOTAL STRAIN (PCT)	PERCNT ALLOW (PCT)
60	SEABED	-174.28	-42.39	-0.04	278.59	6.633	0.000	229.35	-1.59	0.0095	-0.0012	0.0120	0.00
61	SEABED	-180.33	-42.39	-0.02	284.64	6.167	0.000	229.35	-1.19	0.0095	-0.0009	0.0117	0.00
62	SEABED	-186.38	-42.39	0.00	290.69	6.015	0.000	229.35	-0.46	0.0095	-0.0003	0.0111	0.00
63	SEABED	-192.43	-42.39	0.00	296.74	6.003	0.000	229.35	-0.07	0.0095	-0.0001	0.0108	0.00
64	SEABED	-198.48	-42.39	0.00	302.79	6.023	0.000	229.35	0.04	0.0095	0.0000	0.0108	0.00
65	SEABED	-204.53	-42.39	0.00	308.84	6.038	0.000	229.35	0.04	0.0095	0.0000	0.0108	0.00
66	SEABED	-210.58	-42.39	0.00	314.89	6.044	0.000	229.35	0.02	0.0095	0.0000	0.0108	0.00
67	SEABED	-216.63	-42.39	0.00	320.94	6.044	0.000	229.35	0.00	0.0095	0.0000	0.0108	0.00
68	SEABED	-222.68	-42.39	0.00	326.99	6.044	0.000	229.35	0.00	0.0095	0.0000	0.0108	0.00
69	SEABED	-228.73	-42.39	0.00	333.04	6.043	0.000	229.35	0.00	0.0095	0.0000	0.0108	0.00
70	SEABED	-234.78	-42.39	0.00	339.09	6.043	0.000	229.35	0.00	0.0095	0.0000	0.0108	0.00
71	SEABED	-240.83	-42.39	0.00	345.14	6.043	0.000	229.35	0.00	0.0095	0.0000	0.0108	0.00
72	SEABED	-246.88	-42.39	0.00	351.19	6.043	0.000	229.35	0.00	0.0095	0.0000	0.0108	0.00
73	SEABED	-252.93	-42.39	0.00	357.24	0.000	0.000	229.35	0.00	0.0095	0.0000	0.0108	0.00

S T A T I C P I P E C O O R D I N A T E S, F O R C E S A N D S T R A I N S

NODE NO.	PIPE SECTION	X COORD (M)	Y COORD (M)	VERT ANGLE (DEG)	PIPE LENGTH (M)	SUPPORT REACTION (KN)	SEPARA -TION (M)	AXIAL TENSION (KN)	BENDING MOMENT (KN-M)	TENSILE STRAIN (PCT)	BENDING STRAIN (PCT)	TOTAL STRAIN (PCT)	PERCNT ALLOW (PCT)
1	LAYBARGE	96.31	6.41	1.69	0.00	0.655	0.000	0.00	0.00	0.0000	0.0000	0.0000	0.00
3	LAYBARGE	84.28	6.05	1.70	12.04	1.244	0.000	-0.04	0.00	0.0000	0.0000	0.0000	0.00
5	LAYBARGE	73.45	5.73	1.89	22.87	1.315	0.000	-0.08	0.00	0.0000	0.0000	0.0000	0.00
7	TENSIONR	60.11	5.24	1.80	36.23	-0.047	0.000	264.39	0.00	0.0000	0.0000	0.0000	0.00

9	LAYBARGE	51.09	5.01	1.44	45.24	0.000	0.000	264.36	0.00	0.0000	0.0000	0.0000	0.00
10	LAYBARGE	46.44	4.89	1.29	49.89	0.000	0.193	264.35	0.00	0.0000	0.0000	0.0000	0.00
12	LAYBARGE	38.35	4.72	1.15	57.99	0.000	0.000	264.33	0.00	0.0000	0.0000	0.0000	0.00
13	LAYBARGE	35.35	4.67	1.01	60.99	0.000	0.352	264.33	0.00	0.0000	0.0000	0.0000	0.00
15	LAYBARGE	26.33	4.52	0.87	70.02	0.000	0.000	264.31	0.00	0.0000	0.0000	0.0000	0.00
16	LAYBARGE	23.33	4.48	0.71	73.02	0.000	0.853	264.30	0.00	0.0000	0.0000	0.0000	0.00
18	LAYBARGE	11.82	4.35	0.54	84.52	0.000	0.000	264.29	0.00	0.0000	0.0000	0.0000	0.00
19	LAYBARGE	8.87	4.33	10.88	87.48	95.942	0.000	259.80	0.00	0.0000	0.0000	0.0000	0.00
21	LAYBARGE	5.06	2.84	21.26	91.58	0.000	0.000	264.14	0.00	0.0000	0.0000	0.0000	0.00
22	LAYBARGE	2.58	1.88	21.15	94.24	0.000	1.368	264.03	0.00	0.0000	0.0000	0.0000	0.00
24	LAYBARGE	-6.87	-1.76	20.37	104.36	0.000	0.000	263.65	0.00	0.0122	0.0000	0.0123	0.00
27	STINGER	-7.62	-2.04	20.37	105.16	0.000	0.260	263.37	1.95	0.0122	0.0015	0.0137	0.00
29	STINGER	-16.19	-5.22	20.40	114.31	3.230	0.000	260.18	-17.43	0.0120	-0.0130	0.0251	0.00
32	STINGER	-25.40	-8.73	21.79	124.16	32.523	0.000	256.37	-117.70	0.0117	-0.0880	0.0999	0.00
34	STINGER	-35.46	-13.01	24.10	135.09	24.228	0.000	252.25	-83.66	0.0114	-0.0626	0.0743	0.00
36	STINGER	-38.20	-14.25	24.57	138.10	0.000	0.381	251.14	-38.66	0.0113	-0.0289	0.0406	0.00
38	SAGBEND	-44.91	-17.33	24.60	145.49	0.000	0.000	248.07	27.21	0.0111	0.0204	0.0319	0.00
39	SAGBEND	-50.42	-19.82	23.94	151.54	0.000	0.000	245.54	54.22	0.0109	0.0405	0.0520	0.00
40	SAGBEND	-55.97	-22.24	22.98	157.59	0.000	0.000	243.09	69.20	0.0107	0.0518	0.0630	0.00
41	SAGBEND	-61.57	-24.54	21.83	163.64	0.000	0.000	240.76	77.85	0.0105	0.0582	0.0694	0.00
42	SAGBEND	-67.21	-26.73	20.58	169.69	0.000	0.000	238.55	83.14	0.0104	0.0622	0.0733	0.00
43	SAGBEND	-72.89	-28.79	19.26	175.74	0.000	0.000	236.48	86.63	0.0102	0.0648	0.0758	0.00
44	SAGBEND	-78.63	-30.72	17.90	181.79	0.000	0.000	234.54	89.12	0.0101	0.0667	0.0775	0.00
45	SAGBEND	-84.41	-32.51	16.50	187.84	0.000	0.000	232.75	91.04	0.0099	0.0681	0.0789	0.00
46	SAGBEND	-90.23	-34.15	15.07	193.89	0.000	0.000	231.10	92.59	0.0098	0.0692	0.0800	0.00
47	SAGBEND	-96.09	-35.65	13.63	199.94	0.000	0.000	229.59	93.87	0.0097	0.0702	0.0809	0.00
48	SAGBEND	-101.99	-37.00	12.16	205.99	0.000	0.000	228.24	94.91	0.0096	0.0710	0.0816	0.00
49	SAGBEND	-107.92	-38.20	10.68	212.04	0.000	0.000	227.04	95.69	0.0095	0.0716	0.0821	0.00
50	SAGBEND	-113.88	-39.25	9.20	218.09	0.000	0.000	226.00	96.11	0.0094	0.0719	0.0824	0.00
51	SAGBEND	-119.86	-40.14	7.71	224.14	0.000	0.000	225.11	95.99	0.0094	0.0718	0.0822	0.00
52	SAGBEND	-125.86	-40.87	6.22	230.19	0.000	0.000	224.38	95.02	0.0093	0.0711	0.0815	0.00
53	SAGBEND	-131.89	-41.45	4.77	236.24	0.000	0.000	223.81	92.57	0.0093	0.0692	0.0796	0.00
54	SAGBEND	-137.92	-41.88	3.37	242.29	0.000	0.000	223.40	87.54	0.0092	0.0655	0.0758	0.00
55	SAGBEND	-143.96	-42.16	2.07	248.34	0.000	0.000	223.15	77.92	0.0092	0.0583	0.0686	0.00
56	SAGBEND	-150.01	-42.32	0.99	254.39	0.467	0.000	223.05	59.99	0.0092	0.0449	0.0552	0.00
57	SEABED	-156.06	-42.39	0.28	260.44	5.432	0.000	223.06	30.63	0.0092	0.0229	0.0333	0.00
58	SEABED	-162.11	-42.40	0.00	266.49	7.745	0.000	223.09	8.42	0.0092	0.0063	0.0167	0.00
59	SEABED	-168.16	-42.39	-0.05	272.54	7.222	0.000	223.09	-0.25	0.0092	-0.0002	0.0107	0.00

S T A T I C P I P E C O O R D I N A T E S, F O R C E S A N D S T R A I N S

NODE NO.	PIPE SECTION	X COORD (M)	Y COORD (M)	VERT ANGLE (DEG)	PIPE LENGTH (M)	SUPPORT REACTION (KN)	SEPARA -TION (M)	AXIAL TENSION (KN)	BENDING MOMENT (KN-M)	TENSILE STRAIN (PCT)	BENDING STRAIN (PCT)	TOTAL STRAIN (PCT)	PERCNT ALLOW (PCT)
60	SEABED	-174.21	-42.39	-0.03	278.59	6.474	0.000	223.09	-1.67	0.0092	-0.0013	0.0117	0.00
61	SEABED	-180.26	-42.39	-0.01	284.64	6.100	0.000	223.09	-1.00	0.0092	-0.0007	0.0112	0.00
62	SEABED	-186.31	-42.39	0.00	290.69	6.001	0.000	223.09	-0.32	0.0092	-0.0002	0.0107	0.00
63	SEABED	-192.36	-42.39	0.00	296.74	6.007	0.000	223.09	-0.02	0.0092	0.0000	0.0105	0.00
64	SEABED	-198.41	-42.39	0.00	302.79	6.028	0.000	223.09	0.04	0.0092	0.0000	0.0105	0.00
65	SEABED	-204.46	-42.39	0.00	308.84	6.040	0.000	223.09	0.03	0.0092	0.0000	0.0105	0.00
66	SEABED	-210.51	-42.39	0.00	314.89	6.044	0.000	223.09	0.01	0.0092	0.0000	0.0105	0.00
67	SEABED	-216.56	-42.39	0.00	320.94	6.044	0.000	223.09	0.00	0.0092	0.0000	0.0105	0.00
68	SEABED	-222.61	-42.39	0.00	326.99	6.044	0.000	223.09	0.00	0.0092	0.0000	0.0105	0.00
69	SEABED	-228.66	-42.39	0.00	333.04	6.043	0.000	223.09	0.00	0.0092	0.0000	0.0105	0.00
70	SEABED	-234.71	-42.39	0.00	339.09	6.043	0.000	223.09	0.00	0.0092	0.0000	0.0105	0.00
71	SEABED	-240.76	-42.39	0.00	345.14	6.043	0.000	223.09	0.00	0.0092	0.0000	0.0105	0.00
72	SEABED	-246.81	-42.39	0.00	351.19	6.043	0.000	223.09	0.00	0.0092	0.0000	0.0105	0.00
73	SEABED	-252.86	-42.39	0.00	357.24	0.000	0.000	223.09	0.00	0.0092	0.0000	0.0105	0.00

S T A T I C P I P E C O O R D I N A T E S, F O R C E S A N D S T R A I N S

NODE NO.	PIPE SECTION	X COORD (M)	Y COORD (M)	VERT ANGLE (DEG)	PIPE LENGTH (M)	SUPPORT REACTION (KN)	SEPARA -TION (M)	AXIAL TENSION (KN)	BENDING MOMENT (KN-M)	TENSILE STRAIN (PCT)	BENDING STRAIN (PCT)	TOTAL STRAIN (PCT)	PERCNT ALLOW (PCT)
1	LAYBARGE	96.31	6.41	1.69	0.00	0.655	0.000	0.00	0.00	0.0000	0.0000	0.0000	0.00
3	LAYBARGE	84.28	6.05	1.70	12.04	1.244	0.000	-0.04	0.00	0.0000	0.0000	0.0000	0.00
5	LAYBARGE	73.45	5.73	1.89	22.87	1.315	0.000	-0.08	0.00	0.0000	0.0000	0.0000	0.00
7	TENSIONR	60.11	5.24	1.80	36.23	-0.048	0.000	264.38	0.00	0.0000	0.0000	0.0000	0.00
9	LAYBARGE	51.09	5.01	1.44	45.24	0.000	0.000	264.36	0.00	0.0000	0.0000	0.0000	0.00
10	LAYBARGE	46.44	4.89	1.29	49.89	0.000	0.193	264.35	0.00	0.0000	0.0000	0.0000	0.00
12	LAYBARGE	38.35	4.72	1.15	57.99	0.000	0.000	264.33	0.00	0.0000	0.0000	0.0000	0.00
13	LAYBARGE	35.35	4.67	1.01	60.99	0.000	0.352	264.32	0.00	0.0000	0.0000	0.0000	0.00
15	LAYBARGE	26.33	4.52	0.87	70.02	0.000	0.000	264.31	0.00	0.0000	0.0000	0.0000	0.00
16	LAYBARGE	23.34	4.48	0.71	73.00	0.000	0.853	264.30	0.00	0.0000	0.0000	0.0000	0.00
18	LAYBARGE	11.83	4.35	0.54	84.51	0.000	0.000	264.29	0.00	0.0000	0.0000	0.0000	0.00
19	LAYBARGE	8.87	4.33	10.83	87.48	95.513	0.000	259.84	0.00	0.0000	0.0000	0.0000	0.00
21	LAYBARGE	5.06	2.85	21.16	91.57	0.000	0.000	264.13	0.00	0.0000	0.0000	0.0000	0.00
22	LAYBARGE	2.62	1.91	21.06	94.19	0.000	1.378	264.03	0.00	0.0000	0.0000	0.0000	0.00
24	LAYBARGE	-6.83	-1.72	20.94	104.32	0.000	0.000	263.66	0.00	0.0000	0.0000	0.0000	0.00
27	STINGER	-7.62	-2.02	20.32	105.16	0.000	0.270	263.62	0.00	0.0122	0.0000	0.0123	0.00
29	STINGER	-16.21	-5.20	20.35	114.32	2.234	0.000	260.44	-15.46	0.0120	-0.0116	0.0237	0.00
32	STINGER	-25.44	-8.71	21.76	124.19	33.689	0.000	256.61	-121.30	0.0117	-0.0907	0.1026	0.00
34	STINGER	-35.50	-12.99	24.11	135.12	23.859	0.000	252.51	-83.21	0.0114	-0.0622	0.0740	0.00
36	STINGER	-38.24	-14.23	24.57	138.13	0.000	0.380	251.40	-38.40	0.0113	-0.0287	0.0404	0.00
38	SAGBEND	-44.84	-17.26	24.61	145.40	0.000	0.000	248.38	26.63	0.0111	0.0199	0.0315	0.00
39	SAGBEND	-50.36	-19.76	23.96	151.45	0.000	0.000	245.84	53.86	0.0109	0.0403	0.0517	0.00
40	SAGBEND	-55.90	-22.17	23.00	157.50	0.000	0.000	243.39	68.96	0.0107	0.0516	0.0629	0.00
41	SAGBEND	-61.50	-24.48	21.86	163.55	0.000	0.000	241.06	77.66	0.0105	0.0581	0.0693	0.00
42	SAGBEND	-67.14	-26.67	20.61	169.60	0.000	0.000	238.85	82.99	0.0104	0.0621	0.0732	0.00
43	SAGBEND	-72.82	-28.73	19.29	175.65	0.000	0.000	236.77	86.49	0.0102	0.0647	0.0757	0.00
44	SAGBEND	-78.56	-30.66	17.93	181.70	0.000	0.000	234.83	88.99	0.0101	0.0666	0.0774	0.00
45	SAGBEND	-84.33	-32.46	16.53	187.75	0.000	0.000	233.04	90.90	0.0100	0.0680	0.0788	0.00
46	SAGBEND	-90.15	-34.11	15.11	193.80	0.000	0.000	231.38	92.46	0.0098	0.0691	0.0799	0.00
47	SAGBEND	-96.01	-35.61	13.67	199.85	0.000	0.000	229.87	93.74	0.0097	0.0701	0.0808	0.00
48	SAGBEND	-101.91	-36.96	12.20	205.90	0.000	0.000	228.52	94.79	0.0096	0.0709	0.0815	0.00
49	SAGBEND	-107.84	-38.17	10.73	211.95	0.000	0.000	227.31	95.57	0.0095	0.0715	0.0820	0.00
50	SAGBEND	-113.80	-39.22	9.24	218.00	0.000	0.000	226.26	96.01	0.0095	0.0718	0.0823	0.00
51	SAGBEND	-119.78	-40.11	7.75	224.05	0.000	0.000	225.37	95.92	0.0094	0.0717	0.0822	0.00
52	SAGBEND	-125.79	-40.85	6.27	230.10	0.000	0.000	224.64	94.98	0.0093	0.0710	0.0815	0.00
53	SAGBEND	-131.81	-41.43	4.81	236.15	0.000	0.000	224.06	92.61	0.0093	0.0693	0.0797	0.00
54	SAGBEND	-137.84	-41.87	3.41	242.20	0.000	0.000	223.65	87.71	0.0093	0.0656	0.0760	0.00
55	SAGBEND	-143.88	-42.16	2.12	248.25	0.000	0.000	223.39	78.31	0.0092	0.0586	0.0689	0.00
56	SAGBEND	-149.93	-42.32	1.02	254.30	0.390	0.000	223.29	60.78	0.0092	0.0455	0.0558	0.00
57	SEABED	-155.98	-42.38	0.30	260.35	5.244	0.000	223.30	31.66	0.0092	0.0237	0.0341	0.00
58	SEABED	-162.03	-42.40	0.00	266.40	7.733	0.000	223.32	8.95	0.0092	0.0067	0.0171	0.00
59	SEABED	-168.08	-42.39	-0.05	272.45	7.251	0.000	223.32	-0.10	0.0092	-0.0001	0.0106	0.00

S T A T I C P I P E C O O R D I N A T E S, F O R C E S A N D S T R A I N S

NODE NO.	PIPE SECTION	X COORD (M)	Y COORD (M)	VERT ANGLE (DEG)	PIPE LENGTH (M)	SUPPORT REACTION (KN)	SEPARA -TION (M)	AXIAL TENSION (KN)	BENDING MOMENT (KN-M)	TENSILE STRAIN (PCT)	BENDING STRAIN (PCT)	TOTAL STRAIN (PCT)	PERCNT ALLOW (PCT)
60	SEABED	-174.13	-42.39	-0.03	278.50	6.494	0.000	223.32	-1.68	0.0092	-0.0013	0.0117	0.00
61	SEABED	-180.18	-42.39	-0.01	284.55	6.108	0.000	223.32	-1.03	0.0092	-0.0008	0.0113	0.00
62	SEABED	-186.23	-42.39	0.00	290.60	6.002	0.000	223.32	-0.34	0.0092	-0.0003	0.0108	0.00
63	SEABED	-192.28	-42.39	0.00	296.65	6.006	0.000	223.32	-0.03	0.0092	0.0000	0.0105	0.00
64	SEABED	-198.33	-42.39	0.00	302.70	6.027	0.000	223.32	0.04	0.0092	0.0000	0.0105	0.00
65	SEABED	-204.38	-42.39	0.00	308.75	6.040	0.000	223.32	0.03	0.0092	0.0000	0.0105	0.00
66	SEABED	-210.43	-42.39	0.00	314.80	6.044	0.000	223.32	0.01	0.0092	0.0000	0.0105	0.00
67	SEABED	-216.48	-42.39	0.00	320.85	6.044	0.000	223.32	0.00	0.0092	0.0000	0.0105	0.00
68	SEABED	-222.53	-42.39	0.00	326.90	6.044	0.000	223.32	0.00	0.0092	0.0000	0.0105	0.00
69	SEABED	-228.58	-42.39	0.00	332.95	6.043	0.000	223.32	0.00	0.0092	0.0000	0.0105	0.00
70	SEABED	-234.63	-42.39	0.00	339.00	6.043	0.000	223.32	0.00	0.0092	0.0000	0.0105	0.00
71	SEABED	-240.68	-42.39	0.00	345.05	6.043	0.000	223.32	0.00	0.0092	0.0000	0.0105	0.00
72	SEABED	-246.73	-42.39	0.00	351.10	6.043	0.000	223.32	0.00	0.0092	0.0000	0.0105	0.00
73	SEABED	-252.78	-42.39	0.00	357.15	0.000	0.000	223.32	0.00	0.0092	0.0000	0.0105	0.00

S T A T I C P I P E C O O R D I N A T E S, F O R C E S A N D S T R A I N S

NODE NO.	PIPE SECTION	X COORD (M)	Y COORD (M)	VERT ANGLE (DEG)	PIPE LENGTH (M)	SUPPORT REACTION (KN)	SEPARA -TION (M)	AXIAL TENSION (KN)	BENDING MOMENT (KN-M)	TENSILE STRAIN (PCT)	BENDING STRAIN (PCT)	TOTAL STRAIN (PCT)	PERCNT ALLOW (PCT)
1	LAYBARGE	96.31	6.41	1.69	0.00	0.655	0.000	0.00	0.00	0.0000	0.0000	0.0000	0.00
3	LAYBARGE	84.28	6.05	1.70	12.04	1.244	0.000	-0.04	0.00	0.0000	0.0000	0.0000	0.00

5	LAYBARGE	73.45	5.73	1.89	22.87	1.315	0.000	-0.08	0.00	0.0000	0.0000	0.0000	0.00
7	TENSIONR	60.11	5.24	1.81	36.23	0.066	0.000	251.78	0.00	0.0000	0.0000	0.0000	0.00
9	LAYBARGE	51.09	5.00	1.46	45.24	0.000	0.000	251.76	0.00	0.0000	0.0000	0.0000	0.00
10	LAYBARGE	46.44	4.89	1.30	49.89	0.000	0.188	251.75	0.00	0.0000	0.0000	0.0000	0.00
12	LAYBARGE	38.35	4.72	1.15	57.99	0.000	0.000	251.73	0.00	0.0000	0.0000	0.0000	0.00
13	LAYBARGE	35.35	4.66	1.01	60.99	0.000	0.346	251.72	0.00	0.0000	0.0000	0.0000	0.00
15	LAYBARGE	26.33	4.51	0.86	70.02	0.000	0.000	251.71	0.00	0.0000	0.0000	0.0000	0.00
16	LAYBARGE	23.34	4.47	0.70	73.00	0.000	0.848	251.70	0.00	0.0000	0.0000	0.0000	0.00
18	LAYBARGE	11.84	4.35	0.52	84.51	0.000	0.000	251.69	0.00	0.0000	0.0000	0.0000	0.00
19	LAYBARGE	8.87	4.33	10.91	87.48	91.968	0.000	247.36	0.00	0.0000	0.0000	0.0000	0.00
21	LAYBARGE	5.07	2.84	21.36	91.57	0.000	0.000	251.53	0.00	0.0000	0.0000	0.0000	0.00
22	LAYBARGE	2.62	1.88	21.25	94.20	0.000	1.355	251.43	0.00	0.0000	0.0000	0.0000	0.00
24	LAYBARGE	-6.82	-1.78	21.12	104.32	0.000	0.000	251.06	0.00	0.0000	0.0000	0.0000	0.00
27	STINGER	-7.60	-2.08	20.62	105.16	0.000	0.252	251.02	0.00	0.0116	0.0000	0.0117	0.00
29	STINGER	-16.16	-5.30	20.72	114.30	4.192	0.000	247.79	-21.82	0.0114	-0.0163	0.0278	0.00
32	STINGER	-25.34	-8.87	22.16	124.15	31.374	0.000	243.93	-117.11	0.0111	-0.0876	0.0989	0.00
34	STINGER	-35.37	-13.21	24.50	135.08	24.538	0.000	239.74	-85.85	0.0108	-0.0642	0.0753	0.00
36	STINGER	-38.10	-14.47	24.98	138.09	0.000	0.379	238.61	-40.13	0.0107	-0.0300	0.0411	0.00
38	SAGBEND	-44.72	-17.57	25.03	145.40	0.000	0.000	235.53	27.20	0.0105	0.0203	0.0313	0.00
39	SAGBEND	-50.21	-20.10	24.36	151.45	0.000	0.000	232.95	55.76	0.0103	0.0417	0.0525	0.00
40	SAGBEND	-55.75	-22.55	23.36	157.50	0.000	0.000	230.46	71.88	0.0101	0.0538	0.0645	0.00
41	SAGBEND	-61.32	-24.89	22.16	163.55	0.000	0.000	228.08	81.35	0.0099	0.0608	0.0714	0.00
42	SAGBEND	-66.95	-27.11	20.85	169.60	0.000	0.000	225.84	87.23	0.0098	0.0652	0.0757	0.00
43	SAGBEND	-72.63	-29.19	19.47	175.65	0.000	0.000	223.75	91.14	0.0096	0.0682	0.0785	0.00
44	SAGBEND	-78.36	-31.14	18.03	181.70	0.000	0.000	221.79	93.96	0.0095	0.0703	0.0806	0.00
45	SAGBEND	-84.14	-32.94	16.56	187.75	0.000	0.000	219.99	96.11	0.0093	0.0719	0.0821	0.00
46	SAGBEND	-89.96	-34.59	15.05	193.80	0.000	0.000	218.33	97.84	0.0092	0.0732	0.0833	0.00
47	SAGBEND	-95.82	-36.08	13.52	199.85	0.000	0.000	216.83	99.24	0.0091	0.0742	0.0843	0.00
48	SAGBEND	-101.72	-37.42	11.98	205.90	0.000	0.000	215.50	100.33	0.0090	0.0750	0.0850	0.00
49	SAGBEND	-107.65	-38.59	10.41	211.95	0.000	0.000	214.32	101.05	0.0089	0.0756	0.0855	0.00
50	SAGBEND	-113.62	-39.60	8.84	218.00	0.000	0.000	213.31	101.27	0.0088	0.0757	0.0856	0.00
51	SAGBEND	-119.61	-40.45	7.28	224.05	0.000	0.000	212.46	100.72	0.0088	0.0753	0.0852	0.00
52	SAGBEND	-125.62	-41.14	5.73	230.10	0.000	0.000	211.79	98.91	0.0087	0.0740	0.0838	0.00
53	SAGBEND	-131.65	-41.66	4.22	236.15	0.000	0.000	211.28	94.98	0.0087	0.0710	0.0808	0.00
54	SAGBEND	-137.69	-42.03	2.80	242.20	0.000	0.000	210.94	87.35	0.0087	0.0653	0.0751	0.00
55	SAGBEND	-143.73	-42.26	1.54	248.25	0.005	0.000	210.77	73.21	0.0086	0.0548	0.0645	0.00
56	SEABED	-149.78	-42.36	0.59	254.30	2.632	0.000	210.73	47.57	0.0086	0.0356	0.0454	0.00
57	SEABED	-155.83	-42.40	0.09	260.35	7.378	0.000	210.77	18.00	0.0086	0.0135	0.0233	0.00
58	SEABED	-161.88	-42.40	-0.05	266.40	7.692	0.000	210.77	2.64	0.0086	0.0020	0.0119	0.00
59	SEABED	-167.93	-42.39	-0.05	272.45	6.833	0.000	210.77	-1.61	0.0086	-0.0012	0.0111	0.00

S T A T I C P I P E C O O R D I N A T E S, F O R C E S A N D S T R A I N S

NODE NO.	PIPE SECTION	X COORD (M)	Y COORD (M)	VERT ANGLE (DEG)	PIPE LENGTH (M)	SUPPORT REACTION (KN)	SEPARA -TION (M)	AXIAL TENSION (KN)	BENDING MOMENT (KN-M)	TENSILE STRAIN (PCT)	BENDING STRAIN (PCT)	TOTAL STRAIN (PCT)	PERCNT ALLOW (PCT)
60	SEABED	-173.98	-42.39	-0.02	278.50	6.238	0.000	210.77	-1.49	0.0086	-0.0011	0.0110	0.00
61	SEABED	-180.03	-42.39	0.00	284.55	6.022	0.000	210.77	-0.64	0.0086	-0.0005	0.0104	0.00
62	SEABED	-186.08	-42.39	0.00	290.60	5.995	0.000	210.77	-0.13	0.0086	-0.0001	0.0100	0.00
63	SEABED	-192.13	-42.39	0.00	296.65	6.017	0.000	210.77	0.03	0.0086	0.0000	0.0100	0.00
64	SEABED	-198.18	-42.39	0.00	302.70	6.036	0.000	210.77	0.05	0.0086	0.0000	0.0100	0.00
65	SEABED	-204.23	-42.39	0.00	308.75	6.043	0.000	210.77	0.02	0.0086	0.0000	0.0100	0.00
66	SEABED	-210.28	-42.39	0.00	314.80	6.045	0.000	210.77	0.01	0.0086	0.0000	0.0099	0.00
67	SEABED	-216.33	-42.39	0.00	320.85	6.044	0.000	210.77	0.00	0.0086	0.0000	0.0099	0.00
68	SEABED	-222.38	-42.39	0.00	326.90	6.044	0.000	210.77	0.00	0.0086	0.0000	0.0099	0.00
69	SEABED	-228.43	-42.39	0.00	332.95	6.043	0.000	210.77	0.00	0.0086	0.0000	0.0099	0.00
70	SEABED	-234.48	-42.39	0.00	339.00	6.043	0.000	210.77	0.00	0.0086	0.0000	0.0099	0.00
71	SEABED	-240.53	-42.39	0.00	345.05	6.043	0.000	210.77	0.00	0.0086	0.0000	0.0099	0.00
72	SEABED	-246.58	-42.39	0.00	351.10	0.000	0.000	210.77	0.00	0.0086	0.0000	0.0099	0.00

S T A T I C P I P E C O O R D I N A T E S, F O R C E S A N D S T R A I N S

NODE NO.	PIPE SECTION	X COORD (M)	Y COORD (M)	VERT ANGLE (DEG)	PIPE LENGTH (M)	SUPPORT REACTION (KN)	SEPARA -TION (M)	AXIAL TENSION (KN)	BENDING MOMENT (KN-M)	TENSILE STRAIN (PCT)	BENDING STRAIN (PCT)	TOTAL STRAIN (PCT)	PERCNT ALLOW (PCT)
1	LAYBARGE	96.31	6.41	1.69	0.00	0.655	0.000	0.00	0.00	0.0000	0.0000	0.0000	0.00
3	LAYBARGE	84.28	6.05	1.70	12.04	1.244	0.000	-0.04	0.00	0.0000	0.0000	0.0000	0.00

5	LAYBARGE	73.45	5.73	1.89	22.87	1.315	0.000	-0.08	0.00	0.0000	0.0000	0.0000	0.00
7	TENSIONR	60.11	5.24	1.81	36.23	0.067	0.000	251.80	0.00	0.0000	0.0000	0.0000	0.00
9	LAYBARGE	51.09	5.00	1.46	45.24	0.000	0.000	251.77	0.00	0.0000	0.0000	0.0000	0.00
10	LAYBARGE	46.44	4.89	1.30	49.89	0.000	0.188	251.76	0.00	0.0000	0.0000	0.0000	0.00
12	LAYBARGE	38.35	4.72	1.15	57.99	0.000	0.000	251.74	0.00	0.0000	0.0000	0.0000	0.00
13	LAYBARGE	35.35	4.66	1.01	60.99	0.000	0.345	251.74	0.00	0.0000	0.0000	0.0000	0.00
15	LAYBARGE	26.33	4.51	0.86	70.02	0.000	0.000	251.72	0.00	0.0000	0.0000	0.0000	0.00
16	LAYBARGE	23.34	4.47	0.70	73.00	0.000	0.848	251.72	0.00	0.0000	0.0000	0.0000	0.00
18	LAYBARGE	11.83	4.35	0.52	84.51	0.000	0.000	251.70	0.00	0.0000	0.0000	0.0000	0.00
19	LAYBARGE	8.87	4.33	10.15	87.48	85.347	0.000	247.99	0.00	0.0000	0.0000	0.0000	0.00
21	LAYBARGE	5.03	2.94	19.83	91.57	0.000	0.000	251.56	0.00	0.0000	0.0000	0.0000	0.00
22	LAYBARGE	2.59	2.06	19.72	94.16	0.000	1.534	251.46	0.00	0.0000	0.0000	0.0000	0.00
24	LAYBARGE	-6.94	-1.34	19.59	104.28	0.000	0.000	251.11	0.00	0.0000	0.0000	0.0000	0.00
27	STINGER	-7.73	-1.62	19.48	105.12	0.000	0.535	251.09	0.00	0.0000	0.0000	0.0000	0.00
29	STINGER	-16.35	-4.66	20.92	114.26	0.000	0.160	250.70	0.00	0.0115	0.0000	0.0117	0.00
32	STINGER	-25.57	-8.26	22.27	124.15	37.348	0.000	246.72	-131.27	0.0113	-0.0982	0.1096	0.00
34	STINGER	-35.58	-12.64	24.75	135.09	22.608	0.000	242.58	-82.00	0.0109	-0.0613	0.0726	0.00
36	STINGER	-38.31	-13.91	25.20	138.09	0.000	0.379	241.43	-37.44	0.0108	-0.0280	0.0392	0.00
38	SAGBEND	-44.91	-17.03	25.21	145.39	0.000	0.000	238.33	28.08	0.0106	0.0210	0.0321	0.00
39	SAGBEND	-50.39	-19.58	24.54	151.44	0.000	0.000	235.73	55.81	0.0104	0.0417	0.0527	0.00
40	SAGBEND	-55.92	-22.04	23.54	157.49	0.000	0.000	233.22	71.41	0.0102	0.0534	0.0642	0.00
41	SAGBEND	-61.49	-24.40	22.36	163.54	0.000	0.000	230.83	80.56	0.0101	0.0603	0.0710	0.00
42	SAGBEND	-67.11	-26.64	21.06	169.59	0.000	0.000	228.58	86.25	0.0099	0.0645	0.0751	0.00
43	SAGBEND	-72.78	-28.75	19.69	175.64	0.000	0.000	226.46	90.05	0.0097	0.0673	0.0779	0.00
44	SAGBEND	-78.50	-30.72	18.27	181.69	0.000	0.000	224.48	92.79	0.0096	0.0694	0.0798	0.00
45	SAGBEND	-84.27	-32.54	16.82	187.74	0.000	0.000	222.65	94.90	0.0095	0.0710	0.0813	0.00
46	SAGBEND	-90.08	-34.22	15.33	193.79	0.000	0.000	220.97	96.61	0.0093	0.0723	0.0825	0.00
47	SAGBEND	-95.94	-35.74	13.82	199.84	0.000	0.000	219.44	98.01	0.0092	0.0733	0.0835	0.00
48	SAGBEND	-101.83	-37.11	12.29	205.89	0.000	0.000	218.07	99.14	0.0091	0.0741	0.0843	0.00
49	SAGBEND	-107.76	-38.32	10.75	211.94	0.000	0.000	216.86	99.93	0.0090	0.0747	0.0848	0.00
50	SAGBEND	-113.72	-39.36	9.20	217.99	0.000	0.000	215.81	100.29	0.0090	0.0750	0.0850	0.00
51	SAGBEND	-119.70	-40.25	7.64	224.04	0.000	0.000	214.93	99.99	0.0089	0.0748	0.0848	0.00
52	SAGBEND	-125.71	-40.97	6.10	230.09	0.000	0.000	214.21	98.63	0.0088	0.0738	0.0837	0.00
53	SAGBEND	-131.73	-41.54	4.59	236.14	0.000	0.000	213.66	95.46	0.0088	0.0714	0.0813	0.00
54	SAGBEND	-137.77	-41.94	3.15	242.19	0.000	0.000	213.28	89.17	0.0088	0.0667	0.0766	0.00
55	SAGBEND	-143.81	-42.21	1.85	248.24	0.000	0.000	213.06	77.36	0.0088	0.0579	0.0677	0.00
56	SAGBEND	-149.86	-42.34	0.80	254.29	1.226	0.000	212.99	55.73	0.0087	0.0417	0.0516	0.00
57	SEABED	-155.91	-42.39	0.18	260.34	6.570	0.000	213.02	24.82	0.0087	0.0186	0.0285	0.00
58	SEABED	-161.96	-42.40	-0.03	266.39	7.821	0.000	213.04	5.43	0.0087	0.0041	0.0140	0.00
59	SEABED	-168.01	-42.39	-0.05	272.44	7.059	0.000	213.04	-1.09	0.0087	-0.0008	0.0108	0.00

S T A T I C P I P E C O O R D I N A T E S, F O R C E S A N D S T R A I N S

NODE NO.	PIPE SECTION	X COORD (M)	Y COORD (M)	VERT ANGLE (DEG)	PIPE LENGTH (M)	SUPPORT REACTION (KN)	SEPARA -TION (M)	AXIAL TENSION (KN)	BENDING MOMENT (KN-M)	TENSILE STRAIN (PCT)	BENDING STRAIN (PCT)	TOTAL STRAIN (PCT)	PERCNT ALLOW (PCT)
60	SEABED	-174.06	-42.39	-0.03	278.49	6.357	0.000	213.04	-1.67	0.0087	-0.0012	0.0113	0.00
61	SEABED	-180.11	-42.39	-0.01	284.54	6.056	0.000	213.04	-0.84	0.0087	-0.0006	0.0107	0.00
62	SEABED	-186.16	-42.39	0.00	290.59	5.994	0.000	213.04	-0.23	0.0087	-0.0002	0.0102	0.00
63	SEABED	-192.21	-42.39	0.00	296.64	6.010	0.000	213.04	0.01	0.0087	0.0000	0.0100	0.00
64	SEABED	-198.26	-42.39	0.00	302.69	6.032	0.000	213.04	0.05	0.0087	0.0000	0.0101	0.00
65	SEABED	-204.31	-42.39	0.00	308.74	6.042	0.000	213.04	0.03	0.0087	0.0000	0.0101	0.00
66	SEABED	-210.36	-42.39	0.00	314.79	6.045	0.000	213.04	0.01	0.0087	0.0000	0.0100	0.00
67	SEABED	-216.41	-42.39	0.00	320.84	6.044	0.000	213.04	0.00	0.0087	0.0000	0.0100	0.00
68	SEABED	-222.46	-42.39	0.00	326.89	6.044	0.000	213.04	0.00	0.0087	0.0000	0.0100	0.00
69	SEABED	-228.51	-42.39	0.00	332.94	6.043	0.000	213.04	0.00	0.0087	0.0000	0.0100	0.00
70	SEABED	-234.56	-42.39	0.00	338.99	6.043	0.000	213.04	0.00	0.0087	0.0000	0.0100	0.00
71	SEABED	-240.61	-42.39	0.00	345.04	6.043	0.000	213.04	0.00	0.0087	0.0000	0.0100	0.00
72	SEABED	-246.66	-42.39	0.00	351.09	0.000	0.000	213.04	0.00	0.0087	0.0000	0.0100	0.00

S T A T I C P I P E C O O R D I N A T E S, F O R C E S A N D S T R A I N S

NODE NO.	PIPE SECTION	X COORD (M)	Y COORD (M)	VERT ANGLE (DEG)	PIPE LENGTH (M)	SUPPORT REACTION (KN)	SEPARA -TION (M)	AXIAL TENSION (KN)	BENDING MOMENT (KN-M)	TENSILE STRAIN (PCT)	BENDING STRAIN (PCT)	TOTAL STRAIN (PCT)	PERCNT ALLOW (PCT)
1	LAYBARGE	96.31	6.41	1.69	0.00	0.655	0.000	0.00	0.00	0.0000	0.0000	0.0000	0.00
3	LAYBARGE	84.28	6.05	1.70	12.04	1.244	0.000	-0.04	0.00	0.0000	0.0000	0.0000	0.00

5	LAYBARGE	73.45	5.73	1.89	22.87	1.315	0.000	-0.08	0.00	0.0000	0.0000	0.0000	0.00
7	TENSIONR	60.11	5.24	1.82	36.23	0.184	0.000	239.20	0.00	0.0000	0.0000	0.0000	0.00
9	LAYBARGE	51.09	5.00	1.49	45.24	0.000	0.000	239.17	0.00	0.0000	0.0000	0.0000	0.00
10	LAYBARGE	46.44	4.88	1.32	49.89	0.000	0.182	239.16	0.00	0.0000	0.0000	0.0000	0.00
12	LAYBARGE	38.35	4.71	1.16	57.99	0.000	0.000	239.14	0.00	0.0000	0.0000	0.0000	0.00
13	LAYBARGE	35.35	4.65	1.01	60.99	0.000	0.338	239.14	0.00	0.0000	0.0000	0.0000	0.00
15	LAYBARGE	26.33	4.51	0.85	70.02	0.000	0.000	239.12	0.00	0.0000	0.0000	0.0000	0.00
16	LAYBARGE	23.34	4.47	0.68	73.00	0.000	0.841	239.12	0.00	0.0000	0.0000	0.0000	0.00
18	LAYBARGE	11.83	4.35	0.49	84.51	0.000	0.000	239.10	0.00	0.0000	0.0000	0.0000	0.00
19	LAYBARGE	8.86	4.33	10.25	87.48	82.179	0.000	235.48	0.00	0.0000	0.0000	0.0000	0.00
21	LAYBARGE	5.03	2.92	20.06	91.58	0.000	0.000	238.96	0.00	0.0000	0.0000	0.0000	0.00
22	LAYBARGE	2.60	2.04	19.94	94.16	0.000	1.508	238.86	0.00	0.0000	0.0000	0.0000	0.00
24	LAYBARGE	-6.92	-1.40	19.81	104.29	0.000	0.000	238.51	0.00	0.0000	0.0000	0.0000	0.00
27	STINGER	-7.72	-1.69	19.69	105.13	0.000	0.502	238.48	0.00	0.0000	0.0000	0.0000	0.00
29	STINGER	-16.33	-4.76	21.27	114.27	0.000	0.154	238.08	0.00	0.0109	0.0000	0.0111	0.00
32	STINGER	-25.54	-8.42	22.65	124.18	37.260	0.000	234.02	-133.34	0.0107	-0.0997	0.1106	0.00
34	STINGER	-35.52	-12.87	25.19	135.11	22.575	0.000	229.82	-83.62	0.0103	-0.0625	0.0732	0.00
36	STINGER	-38.22	-14.16	25.65	138.11	0.000	0.377	228.66	-38.63	0.0102	-0.0289	0.0395	0.00
38	SAGBEND	-44.78	-17.33	25.67	145.39	0.000	0.000	225.51	28.68	0.0100	0.0215	0.0319	0.00
39	SAGBEND	-50.25	-19.92	24.97	151.44	0.000	0.000	222.87	57.83	0.0098	0.0432	0.0536	0.00
40	SAGBEND	-55.76	-22.42	23.94	157.49	0.000	0.000	220.31	74.54	0.0096	0.0558	0.0660	0.00
41	SAGBEND	-61.31	-24.82	22.70	163.54	0.000	0.000	217.88	84.53	0.0095	0.0632	0.0733	0.00
42	SAGBEND	-66.92	-27.09	21.33	169.59	0.000	0.000	215.59	90.84	0.0093	0.0679	0.0779	0.00
43	SAGBEND	-72.58	-29.22	19.89	175.64	0.000	0.000	213.45	95.10	0.0091	0.0711	0.0810	0.00
44	SAGBEND	-78.30	-31.20	18.39	181.69	0.000	0.000	211.45	98.19	0.0090	0.0734	0.0832	0.00
45	SAGBEND	-84.06	-33.03	16.85	187.74	0.000	0.000	209.61	100.57	0.0088	0.0752	0.0849	0.00
46	SAGBEND	-89.88	-34.71	15.27	193.79	0.000	0.000	207.93	102.48	0.0087	0.0766	0.0863	0.00
47	SAGBEND	-95.73	-36.22	13.67	199.84	0.000	0.000	206.41	104.00	0.0086	0.0778	0.0874	0.00
48	SAGBEND	-101.63	-37.57	12.05	205.89	0.000	0.000	205.06	105.15	0.0085	0.0786	0.0881	0.00
49	SAGBEND	-107.57	-38.74	10.41	211.94	0.000	0.000	203.88	105.84	0.0084	0.0792	0.0886	0.00
50	SAGBEND	-113.53	-39.75	8.77	217.99	0.000	0.000	202.88	105.90	0.0083	0.0792	0.0886	0.00
51	SAGBEND	-119.52	-40.59	7.13	224.04	0.000	0.000	202.05	105.00	0.0083	0.0785	0.0879	0.00
52	SAGBEND	-125.54	-41.25	5.52	230.09	0.000	0.000	201.39	102.52	0.0082	0.0767	0.0860	0.00
53	SAGBEND	-131.57	-41.75	3.96	236.14	0.000	0.000	200.92	97.39	0.0082	0.0728	0.0822	0.00
54	SAGBEND	-137.61	-42.10	2.52	242.19	0.000	0.000	200.61	87.72	0.0082	0.0656	0.0749	0.00
55	SAGBEND	-143.65	-42.29	1.28	248.24	0.125	0.000	200.48	70.14	0.0082	0.0525	0.0618	0.00
56	SEABED	-149.70	-42.38	0.41	254.29	4.367	0.000	200.48	39.94	0.0082	0.0299	0.0392	0.00
57	SEABED	-155.75	-42.40	0.03	260.34	7.880	0.000	200.51	12.62	0.0082	0.0094	0.0188	0.00
58	SEABED	-161.80	-42.40	-0.06	266.39	7.539	0.000	200.52	0.62	0.0082	0.0005	0.0099	0.00
59	SEABED	-167.85	-42.39	-0.04	272.44	6.644	0.000	200.51	-1.91	0.0082	-0.0014	0.0109	0.00

S T A T I C P I P E C O O R D I N A T E S, F O R C E S A N D S T R A I N S

NODE NO.	PIPE SECTION	X COORD (M)	Y COORD (M)	VERT ANGLE (DEG)	PIPE LENGTH (M)	SUPPORT REACTION (KN)	SEPARA -TION (M)	AXIAL TENSION (KN)	BENDING MOMENT (KN-M)	TENSILE STRAIN (PCT)	BENDING STRAIN (PCT)	TOTAL STRAIN (PCT)	PERCNT ALLOW (PCT)
60	SEABED	-173.90	-42.39	-0.02	278.49	6.146	0.000	200.51	-1.31	0.0082	-0.0010	0.0104	0.00
61	SEABED	-179.95	-42.39	0.00	284.54	5.998	0.000	200.51	-0.47	0.0082	-0.0004	0.0098	0.00
62	SEABED	-186.00	-42.39	0.00	290.59	5.997	0.000	200.51	-0.06	0.0082	0.0000	0.0095	0.00
63	SEABED	-192.05	-42.39	0.00	296.64	6.022	0.000	200.51	0.05	0.0082	0.0000	0.0095	0.00
64	SEABED	-198.10	-42.39	0.00	302.69	6.039	0.000	200.51	0.04	0.0082	0.0000	0.0095	0.00
65	SEABED	-204.15	-42.39	0.00	308.74	6.044	0.000	200.51	0.02	0.0082	0.0000	0.0095	0.00
66	SEABED	-210.20	-42.39	0.00	314.79	6.045	0.000	200.51	0.00	0.0082	0.0000	0.0095	0.00
67	SEABED	-216.25	-42.39	0.00	320.84	6.044	0.000	200.51	0.00	0.0082	0.0000	0.0095	0.00
68	SEABED	-222.30	-42.39	0.00	326.89	6.044	0.000	200.51	0.00	0.0082	0.0000	0.0095	0.00
69	SEABED	-228.35	-42.39	0.00	332.94	6.043	0.000	200.51	0.00	0.0082	0.0000	0.0095	0.00
70	SEABED	-234.40	-42.39	0.00	338.99	6.043	0.000	200.51	0.00	0.0082	0.0000	0.0095	0.00
71	SEABED	-240.45	-42.39	0.00	345.04	6.043	0.000	200.51	0.00	0.0082	0.0000	0.0095	0.00
72	SEABED	-246.50	-42.39	0.00	351.09	0.000	0.000	200.51	0.00	0.0082	0.0000	0.0095	0.00

S T A T I C P I P E C O O R D I N A T E S, F O R C E S A N D S T R A I N S

NODE NO.	PIPE SECTION	X COORD (M)	Y COORD (M)	VERT ANGLE (DEG)	PIPE LENGTH (M)	SUPPORT REACTION (KN)	SEPARA -TION (M)	AXIAL TENSION (KN)	BENDING MOMENT (KN-M)	TENSILE STRAIN (PCT)	BENDING STRAIN (PCT)	TOTAL STRAIN (PCT)	PERCNT ALLOW (PCT)
1	LAYBARGE	96.31	6.41	1.69	0.00	0.655	0.000	0.00	0.00	0.0000	0.0000	0.0000	0.00
3	LAYBARGE	84.28	6.05	1.70	12.04	1.244	0.000	-0.04	0.00	0.0000	0.0000	0.0000	0.00

5	LAYBARGE	73.45	5.73	1.89	22.87	1.315	0.000	-0.08	0.00	0.0000	0.0000	0.0000	0.00
7	TENSIONR	60.11	5.24	1.82	36.23	0.181	0.000	239.17	0.00	0.0000	0.0000	0.0000	0.00
9	LAYBARGE	51.09	5.00	1.49	45.24	0.000	0.000	239.15	0.00	0.0000	0.0000	0.0000	0.00
10	LAYBARGE	46.44	4.88	1.31	49.89	0.000	0.182	239.14	0.00	0.0000	0.0000	0.0000	0.00
12	LAYBARGE	38.35	4.71	1.16	57.99	0.000	0.000	239.12	0.00	0.0000	0.0000	0.0000	0.00
13	LAYBARGE	35.35	4.65	1.01	60.99	0.000	0.338	239.11	0.00	0.0000	0.0000	0.0000	0.00
15	LAYBARGE	26.33	4.51	0.85	70.02	0.000	0.000	239.09	0.00	0.0000	0.0000	0.0000	0.00
16	LAYBARGE	23.34	4.47	0.68	73.00	0.000	0.842	239.09	0.00	0.0000	0.0000	0.0000	0.00
18	LAYBARGE	11.84	4.35	0.49	84.51	0.000	0.000	239.08	0.00	0.0000	0.0000	0.0000	0.00
19	LAYBARGE	8.87	4.33	8.83	87.48	70.520	0.000	236.43	0.00	0.0000	0.0000	0.0000	0.00
21	LAYBARGE	4.97	3.12	17.23	91.57	0.000	0.000	238.95	0.00	0.0000	0.0000	0.0000	0.00
22	LAYBARGE	2.57	2.37	17.11	94.07	0.000	1.835	238.87	0.00	0.0000	0.0000	0.0000	0.00
24	LAYBARGE	-7.10	-0.59	16.97	104.20	0.000	0.000	238.56	0.00	0.0000	0.0000	0.0000	0.00
27	STINGER	-7.81	-0.81	16.85	104.93	0.000	0.815	238.54	0.00	0.0000	0.0000	0.0000	0.00
29	STINGER	-16.53	-3.44	17.98	114.04	10.711	0.000	238.23	0.00	0.0000	0.0000	0.0000	0.00
32	STINGER	-25.96	-6.71	26.25	124.04	30.608	0.000	236.11	0.00	0.0108	0.0000	0.0110	0.00
34	STINGER	-35.76	-11.56	26.63	134.97	24.324	0.000	231.22	-47.77	0.0104	-0.0357	0.0465	0.00
36	STINGER	-38.43	-12.91	26.86	137.97	0.000	0.428	229.92	-12.30	0.0103	-0.0092	0.0199	0.00
38	SAGBEND	-45.07	-16.26	26.51	145.40	0.000	0.000	226.54	41.66	0.0101	0.0312	0.0417	0.00
39	SAGBEND	-50.50	-18.92	25.67	151.45	0.000	0.000	223.82	64.58	0.0099	0.0483	0.0587	0.00
40	SAGBEND	-55.98	-21.49	24.56	157.50	0.000	0.000	221.21	77.92	0.0097	0.0583	0.0685	0.00
41	SAGBEND	-61.51	-23.95	23.28	163.55	0.000	0.000	218.73	86.08	0.0095	0.0644	0.0745	0.00
42	SAGBEND	-67.09	-26.27	21.90	169.60	0.000	0.000	216.39	91.39	0.0093	0.0684	0.0784	0.00
43	SAGBEND	-72.73	-28.46	20.46	175.65	0.000	0.000	214.19	95.13	0.0092	0.0711	0.0811	0.00
44	SAGBEND	-78.43	-30.50	18.96	181.70	0.000	0.000	212.14	97.95	0.0090	0.0733	0.0831	0.00
45	SAGBEND	-84.18	-32.39	17.42	187.75	0.000	0.000	210.24	100.21	0.0089	0.0749	0.0847	0.00
46	SAGBEND	-89.97	-34.12	15.85	193.80	0.000	0.000	208.50	102.08	0.0088	0.0763	0.0860	0.00
47	SAGBEND	-95.82	-35.69	14.26	199.85	0.000	0.000	206.92	103.63	0.0086	0.0775	0.0871	0.00
48	SAGBEND	-101.70	-37.10	12.64	205.90	0.000	0.000	205.51	104.86	0.0085	0.0784	0.0880	0.00
49	SAGBEND	-107.62	-38.34	11.00	211.95	0.000	0.000	204.27	105.70	0.0085	0.0791	0.0885	0.00
50	SAGBEND	-113.58	-39.41	9.36	218.00	0.000	0.000	203.20	106.00	0.0084	0.0793	0.0887	0.00
51	SAGBEND	-119.56	-40.31	7.72	224.05	0.000	0.000	202.31	105.49	0.0083	0.0789	0.0883	0.00
52	SAGBEND	-125.56	-41.03	6.10	230.10	0.000	0.000	201.59	103.66	0.0083	0.0775	0.0869	0.00
53	SAGBEND	-131.59	-41.59	4.52	236.15	0.000	0.000	201.05	99.65	0.0082	0.0745	0.0839	0.00
54	SAGBEND	-137.62	-41.99	3.02	242.20	0.000	0.000	200.69	91.91	0.0082	0.0687	0.0780	0.00
55	SAGBEND	-143.67	-42.24	1.70	248.25	0.001	0.000	200.49	77.70	0.0082	0.0581	0.0674	0.00
56	SEABED	-149.72	-42.36	0.67	254.30	2.167	0.000	200.45	52.17	0.0082	0.0390	0.0483	0.00
57	SEABED	-155.77	-42.40	0.12	260.35	7.299	0.000	200.49	20.69	0.0082	0.0155	0.0248	0.00
58	SEABED	-161.82	-42.40	-0.05	266.40	7.837	0.000	200.50	3.44	0.0082	0.0026	0.0120	0.00
59	SEABED	-167.87	-42.39	-0.05	272.45	6.936	0.000	200.50	-1.62	0.0082	-0.0012	0.0107	0.00

S T A T I C P I P E C O O R D I N A T E S, F O R C E S A N D S T R A I N S

NODE NO.	PIPE SECTION	X COORD (M)	Y COORD (M)	VERT ANGLE (DEG)	PIPE LENGTH (M)	SUPPORT REACTION (KN)	SEPARA -TION (M)	AXIAL TENSION (KN)	BENDING MOMENT (KN-M)	TENSILE STRAIN (PCT)	BENDING STRAIN (PCT)	TOTAL STRAIN (PCT)	PERCNT ALLOW (PCT)
60	SEABED	-173.92	-42.39	-0.02	278.50	6.275	0.000	200.50	-1.64	0.0082	-0.0012	0.0107	0.00
61	SEABED	-179.97	-42.39	-0.01	284.55	6.026	0.000	200.50	-0.73	0.0082	-0.0005	0.0100	0.00
62	SEABED	-186.02	-42.39	0.00	290.60	5.990	0.000	200.50	-0.16	0.0082	-0.0001	0.0096	0.00
63	SEABED	-192.07	-42.39	0.00	296.65	6.013	0.000	200.50	0.03	0.0082	0.0000	0.0095	0.00
64	SEABED	-198.12	-42.39	0.00	302.70	6.034	0.000	200.50	0.05	0.0082	0.0000	0.0095	0.00
65	SEABED	-204.17	-42.39	0.00	308.75	6.043	0.000	200.50	0.03	0.0082	0.0000	0.0095	0.00
66	SEABED	-210.22	-42.39	0.00	314.80	6.045	0.000	200.50	0.01	0.0082	0.0000	0.0095	0.00
67	SEABED	-216.27	-42.39	0.00	320.85	6.044	0.000	200.50	0.00	0.0082	0.0000	0.0095	0.00
68	SEABED	-222.32	-42.39	0.00	326.90	6.044	0.000	200.50	0.00	0.0082	0.0000	0.0095	0.00
69	SEABED	-228.37	-42.39	0.00	332.95	6.043	0.000	200.50	0.00	0.0082	0.0000	0.0095	0.00
70	SEABED	-234.42	-42.39	0.00	339.00	6.043	0.000	200.50	0.00	0.0082	0.0000	0.0095	0.00
71	SEABED	-240.47	-42.39	0.00	345.05	6.043	0.000	200.50	0.00	0.0082	0.0000	0.0095	0.00
72	SEABED	-246.52	-42.39	0.00	351.10	0.000	0.000	200.50	0.00	0.0082	0.0000	0.0095	0.00

S T A T I C P I P E C O O R D I N A T E S, F O R C E S A N D S T R A I N S

NODE NO.	PIPE SECTION	X COORD (M)	Y COORD (M)	VERT ANGLE (DEG)	PIPE LENGTH (M)	SUPPORT REACTION (KN)	SEPARA -TION (M)	AXIAL TENSION (KN)	BENDING MOMENT (KN-M)	TENSILE STRAIN (PCT)	BENDING STRAIN (PCT)	TOTAL STRAIN (PCT)	PERCNT ALLOW (PCT)
1	LAYBARGE	96.31	6.41	1.69	0.00	0.655	0.000	0.00	0.00	0.0000	0.0000	0.0000	0.00
3	LAYBARGE	84.28	6.05	1.70	12.04	1.244	0.000	-0.04	0.00	0.0000	0.0000	0.0000	0.00

5	LAYBARGE	73.45	5.73	1.89	22.87	1.315	0.000	-0.08	0.00	0.0000	0.0000	0.0000	0.00
7	TENSIONR	60.11	5.24	1.84	36.23	0.295	0.000	226.57	0.00	0.0000	0.0000	0.0000	0.00
9	LAYBARGE	51.09	4.99	1.51	45.24	0.000	0.000	226.54	0.00	0.0000	0.0000	0.0000	0.00
10	LAYBARGE	46.44	4.88	1.33	49.89	0.000	0.176	226.53	0.00	0.0000	0.0000	0.0000	0.00
12	LAYBARGE	38.35	4.70	1.17	57.99	0.000	0.000	226.51	0.00	0.0000	0.0000	0.0000	0.00
13	LAYBARGE	35.35	4.64	1.01	60.99	0.000	0.330	226.50	0.00	0.0000	0.0000	0.0000	0.00
15	LAYBARGE	26.33	4.50	0.84	70.02	0.000	0.000	226.49	0.00	0.0000	0.0000	0.0000	0.00
16	LAYBARGE	23.34	4.46	0.66	73.00	0.000	0.836	226.48	0.00	0.0000	0.0000	0.0000	0.00
18	LAYBARGE	11.84	4.35	0.46	84.51	0.000	0.000	226.47	0.00	0.0000	0.0000	0.0000	0.00
19	LAYBARGE	8.87	4.33	8.81	87.47	66.934	0.000	223.95	0.00	0.0000	0.0000	0.0000	0.00
21	LAYBARGE	4.97	3.12	17.22	91.56	0.000	0.000	226.34	0.00	0.0000	0.0000	0.0000	0.00
22	LAYBARGE	2.57	2.37	17.10	94.08	0.000	1.835	226.26	0.00	0.0000	0.0000	0.0000	0.00
24	LAYBARGE	-7.11	-0.59	16.94	104.20	0.000	0.000	225.95	0.00	0.0000	0.0000	0.0000	0.00
27	STINGER	-7.82	-0.80	16.82	104.94	0.000	0.816	225.93	0.00	0.0000	0.0000	0.0000	0.00
29	STINGER	-16.54	-3.43	18.12	114.05	11.510	0.000	225.61	0.00	0.0000	0.0000	0.0000	0.00
32	STINGER	-25.97	-6.76	26.84	124.06	30.121	0.000	223.45	0.00	0.0102	0.0000	0.0104	0.00
34	STINGER	-35.71	-11.71	27.23	134.99	24.372	0.000	218.46	-47.95	0.0098	-0.0359	0.0460	0.00
36	STINGER	-38.37	-13.08	27.45	137.98	0.000	0.428	217.13	-12.14	0.0097	-0.0091	0.0192	0.00
38	SAGBEND	-44.96	-16.49	27.09	145.40	0.000	0.000	213.69	43.29	0.0095	0.0324	0.0423	0.00
39	SAGBEND	-50.36	-19.21	26.22	151.45	0.000	0.000	210.92	67.43	0.0093	0.0504	0.0602	0.00
40	SAGBEND	-55.82	-21.83	25.05	157.50	0.000	0.000	208.25	81.76	0.0091	0.0611	0.0708	0.00
41	SAGBEND	-61.33	-24.33	23.71	163.55	0.000	0.000	205.72	90.69	0.0089	0.0678	0.0774	0.00
42	SAGBEND	-66.89	-26.69	22.25	169.60	0.000	0.000	203.34	96.62	0.0087	0.0723	0.0817	0.00
43	SAGBEND	-72.52	-28.91	20.72	175.65	0.000	0.000	201.10	100.84	0.0086	0.0754	0.0847	0.00
44	SAGBEND	-78.21	-30.97	19.13	181.70	0.000	0.000	199.03	104.04	0.0084	0.0778	0.0870	0.00
45	SAGBEND	-83.95	-32.87	17.50	187.75	0.000	0.000	197.12	106.59	0.0083	0.0797	0.0889	0.00
46	SAGBEND	-89.75	-34.61	15.83	193.80	0.000	0.000	195.38	108.68	0.0081	0.0813	0.0903	0.00
47	SAGBEND	-95.59	-36.17	14.13	199.85	0.000	0.000	193.81	110.36	0.0080	0.0825	0.0915	0.00
48	SAGBEND	-101.48	-37.56	12.40	205.90	0.000	0.000	192.41	111.60	0.0079	0.0835	0.0924	0.00
49	SAGBEND	-107.41	-38.77	10.67	211.95	0.000	0.000	191.20	112.30	0.0078	0.0840	0.0929	0.00
50	SAGBEND	-113.37	-39.80	8.92	218.00	0.000	0.000	190.17	112.22	0.0078	0.0839	0.0927	0.00
51	SAGBEND	-119.36	-40.64	7.19	224.05	0.000	0.000	189.33	110.94	0.0077	0.0830	0.0917	0.00
52	SAGBEND	-125.37	-41.31	5.49	230.10	0.000	0.000	188.68	107.74	0.0076	0.0806	0.0893	0.00
53	SAGBEND	-131.40	-41.80	3.87	236.15	0.000	0.000	188.22	101.36	0.0076	0.0758	0.0845	0.00
54	SAGBEND	-137.45	-42.13	2.38	242.20	0.000	0.000	187.94	89.63	0.0076	0.0670	0.0757	0.00
55	SAGBEND	-143.49	-42.32	1.13	248.25	0.406	0.000	187.83	68.72	0.0076	0.0514	0.0601	0.00
56	SEABED	-149.54	-42.39	0.32	254.30	5.581	0.000	187.86	35.32	0.0076	0.0264	0.0352	0.00
57	SEABED	-155.59	-42.40	-0.01	260.35	8.121	0.000	187.89	9.60	0.0076	0.0072	0.0160	0.00
58	SEABED	-161.64	-42.39	-0.06	266.40	7.435	0.000	187.89	-0.47	0.0076	-0.0003	0.0092	0.00
59	SEABED	-167.69	-42.39	-0.04	272.45	6.533	0.000	187.88	-2.05	0.0076	-0.0015	0.0104	0.00

S T A T I C P I P E C O O R D I N A T E S, F O R C E S A N D S T R A I N S

NODE NO.	PIPE SECTION	X COORD (M)	Y COORD (M)	VERT ANGLE (DEG)	PIPE LENGTH (M)	SUPPORT REACTION (KN)	SEPARA -TION (M)	AXIAL TENSION (KN)	BENDING MOMENT (KN-M)	TENSILE STRAIN (PCT)	BENDING STRAIN (PCT)	TOTAL STRAIN (PCT)	PERCNT ALLOW (PCT)
60	SEABED	-173.74	-42.39	-0.01	278.50	6.094	0.000	187.88	-1.20	0.0076	-0.0009	0.0098	0.00
61	SEABED	-179.79	-42.39	0.00	284.55	5.986	0.000	187.88	-0.37	0.0076	-0.0003	0.0092	0.00
62	SEABED	-185.84	-42.39	0.00	290.60	5.998	0.000	187.88	-0.01	0.0076	0.0000	0.0089	0.00
63	SEABED	-191.89	-42.39	0.00	296.65	6.026	0.000	187.88	0.06	0.0076	0.0000	0.0089	0.00
64	SEABED	-197.94	-42.39	0.00	302.70	6.041	0.000	187.88	0.04	0.0076	0.0000	0.0089	0.00
65	SEABED	-203.99	-42.39	0.00	308.75	6.045	0.000	187.88	0.01	0.0076	0.0000	0.0089	0.00
66	SEABED	-210.04	-42.39	0.00	314.80	6.045	0.000	187.88	0.00	0.0076	0.0000	0.0089	0.00
67	SEABED	-216.09	-42.39	0.00	320.85	6.044	0.000	187.88	0.00	0.0076	0.0000	0.0089	0.00
68	SEABED	-222.14	-42.39	0.00	326.90	6.043	0.000	187.88	0.00	0.0076	0.0000	0.0089	0.00
69	SEABED	-228.19	-42.39	0.00	332.95	6.043	0.000	187.88	0.00	0.0076	0.0000	0.0089	0.00
70	SEABED	-234.24	-42.39	0.00	339.00	6.043	0.000	187.88	0.00	0.0076	0.0000	0.0089	0.00
71	SEABED	-240.29	-42.39	0.00	345.05	0.000	0.000	187.88	0.00	0.0076	0.0000	0.0089	0.00

S T A T I C P I P E C O O R D I N A T E S, F O R C E S A N D S T R A I N S

NODE NO.	PIPE SECTION	X COORD (M)	Y COORD (M)	VERT ANGLE (DEG)	PIPE LENGTH (M)	SUPPORT REACTION (KN)	SEPARA -TION (M)	AXIAL TENSION (KN)	BENDING MOMENT (KN-M)	TENSILE STRAIN (PCT)	BENDING STRAIN (PCT)	TOTAL STRAIN (PCT)	PERCNT ALLOW (PCT)
1	LAYBARGE	96.31	6.41	1.69	0.00	0.655	0.000	0.00	0.00	0.0000	0.0000	0.0000	0.00
3	LAYBARGE	84.28	6.05	1.70	12.04	1.244	0.000	-0.04	0.00	0.0000	0.0000	0.0000	0.00
5	LAYBARGE	73.45	5.73	1.89	22.87	1.315	0.000	-0.08	0.00	0.0000	0.0000	0.0000	0.00
7	TENSIONR	60.11	5.24	1.84	36.23	0.296	0.000	226.60	0.00	0.0000	0.0000	0.0000	0.00
9	LAYBARGE	51.09	4.99	1.51	45.24	0.000	0.000	226.57	0.00	0.0000	0.0000	0.0000	0.00
10	LAYBARGE	46.44	4.88	1.33	49.89	0.000	0.176	226.56	0.00	0.0000	0.0000	0.0000	0.00
12	LAYBARGE	38.35	4.70	1.17	57.99	0.000	0.000	226.54	0.00	0.0000	0.0000	0.0000	0.00
13	LAYBARGE	35.35	4.64	1.01	60.99	0.000	0.330	226.53	0.00	0.0000	0.0000	0.0000	0.00
15	LAYBARGE	26.33	4.50	0.84	70.02	0.000	0.000	226.52	0.00	0.0000	0.0000	0.0000	0.00
16	LAYBARGE	23.34	4.46	0.66	73.01	0.000	0.835	226.51	0.00	0.0000	0.0000	0.0000	0.00
18	LAYBARGE	11.83	4.35	0.46	84.51	0.000	0.000	226.50	0.00	0.0000	0.0000	0.0000	0.00
19	LAYBARGE	8.87	4.33	7.50	87.48	56.656	0.000	224.71	0.00	0.0000	0.0000	0.0000	0.00
21	LAYBARGE	4.91	3.30	14.59	91.57	0.000	0.000	226.39	0.00	0.0000	0.0000	0.0000	0.00
22	LAYBARGE	2.58	2.69	14.47	93.98	0.000	2.136	226.33	0.00	0.0000	0.0000	0.0000	0.00
24	LAYBARGE	-7.22	0.18	14.31	104.10	0.000	0.000	226.06	0.00	0.0000	0.0000	0.0000	0.00
27	STINGER	-7.84	0.02	14.18	104.73	0.000	1.159	226.04	0.00	0.0000	0.0000	0.0000	0.00
29	STINGER	-16.63	-2.19	15.06	113.80	8.249	0.000	225.79	0.00	0.0000	0.0000	0.0000	0.00
32	STINGER	-26.25	-4.95	20.37	123.81	35.304	0.000	224.88	0.00	0.0000	0.0000	0.0000	0.00
34	STINGER	-36.18	-9.53	27.60	134.75	23.058	0.000	224.83	0.00	0.0000	0.0000	0.0000	0.00
36	STINGER	-38.78	-11.06	30.44	137.77	0.000	0.150	224.98	0.00	0.0000	0.0000	0.0000	0.00
38	SAGBEND	-39.66	-11.57	28.11	138.79	0.000	0.000	224.75	0.00	0.0101	0.0000	0.0105	0.00
39	SAGBEND	-45.49	-14.67	27.70	145.39	0.000	0.000	221.61	44.04	0.0099	0.0329	0.0432	0.00
40	SAGBEND	-50.87	-17.44	26.83	151.44	0.000	0.000	218.79	66.33	0.0097	0.0496	0.0598	0.00
41	SAGBEND	-56.29	-20.12	25.69	157.49	0.000	0.000	216.07	79.47	0.0095	0.0594	0.0695	0.00
42	SAGBEND	-61.77	-22.68	24.39	163.54	0.000	0.000	213.48	87.64	0.0093	0.0655	0.0755	0.00
43	SAGBEND	-67.31	-25.11	22.98	169.59	0.000	0.000	211.03	93.07	0.0091	0.0696	0.0794	0.00
44	SAGBEND	-72.91	-27.40	21.51	175.64	0.000	0.000	208.72	96.97	0.0090	0.0725	0.0822	0.00
45	SAGBEND	-78.57	-29.55	19.98	181.69	0.000	0.000	206.57	99.97	0.0088	0.0748	0.0843	0.00
46	SAGBEND	-84.28	-31.54	18.41	187.74	0.000	0.000	204.57	102.41	0.0087	0.0766	0.0861	0.00
47	SAGBEND	-90.05	-33.37	16.80	193.79	0.000	0.000	202.74	104.47	0.0085	0.0781	0.0875	0.00
48	SAGBEND	-95.86	-35.03	15.17	199.84	0.000	0.000	201.06	106.21	0.0084	0.0794	0.0888	0.00
49	SAGBEND	-101.72	-36.53	13.51	205.89	0.000	0.000	199.56	107.63	0.0083	0.0805	0.0897	0.00
50	SAGBEND	-107.63	-37.86	11.83	211.94	0.000	0.000	198.23	108.67	0.0082	0.0813	0.0905	0.00
51	SAGBEND	-113.57	-39.01	10.14	217.99	0.000	0.000	197.07	109.20	0.0081	0.0817	0.0908	0.00
52	SAGBEND	-119.54	-39.99	8.45	224.04	0.000	0.000	196.10	108.96	0.0080	0.0815	0.0906	0.00
53	SAGBEND	-125.53	-40.79	6.77	230.09	0.000	0.000	195.30	107.53	0.0080	0.0804	0.0895	0.00
54	SAGBEND	-131.55	-41.42	5.12	236.14	0.000	0.000	194.70	104.14	0.0079	0.0779	0.0869	0.00
55	SAGBEND	-137.58	-41.87	3.56	242.19	0.000	0.000	194.27	97.46	0.0079	0.0729	0.0819	0.00
56	SAGBEND	-143.62	-42.17	2.13	248.24	0.000	0.000	194.02	85.15	0.0079	0.0637	0.0727	0.00
57	SAGBEND	-149.67	-42.33	0.96	254.29	0.799	0.000	193.93	63.12	0.0079	0.0472	0.0562	0.00
58	SEABED	-155.72	-42.39	0.24	260.34	6.273	0.000	193.97	29.93	0.0079	0.0224	0.0314	0.00
59	SEABED	-161.77	-42.40	-0.03	266.39	8.044	0.000	193.99	7.20	0.0079	0.0054	0.0145	0.00

S T A T I C P I P E C O O R D I N A T E S, F O R C E S A N D S T R A I N S

NODE NO.	PIPE SECTION	X COORD (M)	Y COORD (M)	VERT ANGLE (DEG)	PIPE LENGTH (M)	SUPPORT REACTION (KN)	SEPARA -TION (M)	AXIAL TENSION (KN)	BENDING MOMENT (KN-M)	TENSILE STRAIN (PCT)	BENDING STRAIN (PCT)	TOTAL STRAIN (PCT)	PERCNT ALLOW (PCT)
60	SEABED	-167.82	-42.39	-0.06	272.44	7.253	0.000	193.99	-0.97	0.0079	-0.0007	0.0099	0.00
61	SEABED	-173.87	-42.39	-0.03	278.49	6.434	0.000	193.99	-1.92	0.0079	-0.0014	0.0106	0.00
62	SEABED	-179.92	-42.39	-0.01	284.54	6.067	0.000	193.99	-1.02	0.0079	-0.0008	0.0099	0.00
63	SEABED	-185.97	-42.39	0.00	290.59	5.987	0.000	193.99	-0.29	0.0079	-0.0002	0.0094	0.00
64	SEABED	-192.02	-42.39	0.00	296.64	6.004	0.000	193.99	0.01	0.0079	0.0000	0.0092	0.00
65	SEABED	-198.07	-42.39	0.00	302.69	6.029	0.000	193.99	0.06	0.0079	0.0000	0.0092	0.00
66	SEABED	-204.12	-42.39	0.00	308.74	6.042	0.000	193.99	0.03	0.0079	0.0000	0.0092	0.00
67	SEABED	-210.17	-42.39	0.00	314.79	6.045	0.000	193.99	0.01	0.0079	0.0000	0.0092	0.00
68	SEABED	-216.22	-42.39	0.00	320.84	6.045	0.000	193.99	0.00	0.0079	0.0000	0.0092	0.00
69	SEABED	-222.27	-42.39	0.00	326.89	6.044	0.000	193.99	0.00	0.0079	0.0000	0.0092	0.00
70	SEABED	-228.32	-42.39	0.00	332.94	6.043	0.000	193.99	0.00	0.0079	0.0000	0.0092	0.00
71	SEABED	-234.37	-42.39	0.00	338.99	6.043	0.000	193.99	0.00	0.0079	0.0000	0.0092	0.00
72	SEABED	-240.42	-42.39	0.00	345.04	6.043	0.000	193.99	0.00	0.0079	0.0000	0.0092	0.00
73	SEABED	-246.47	-42.39	0.00	351.09	0.000	0.000	193.99	0.00	0.0079	0.0000	0.0092	0.00

S T A T I C P I P E C O O R D I N A T E S, F O R C E S A N D S T R A I N S

NODE NO.	PIPE SECTION	X COORD (M)	Y COORD (M)	VERT ANGLE (DEG)	PIPE LENGTH (M)	SUPPORT REACTION (KN)	SEPARA -TION (M)	AXIAL TENSION (KN)	BENDING MOMENT (KN-M)	TENSILE STRAIN (PCT)	BENDING STRAIN (PCT)	TOTAL STRAIN (PCT)	PERCNT ALLOW (PCT)
1	LAYBARGE	96.31	6.41	1.69	0.00	0.655	0.000	0.00	0.00	0.0000	0.0000	0.0000	0.00
3	LAYBARGE	84.28	6.05	1.70	12.04	1.244	0.000	-0.04	0.00	0.0000	0.0000	0.0000	0.00

5	LAYBARGE	73.45	5.73	1.89	22.87	1.315	0.000	-0.08	0.00	0.0000	0.0000	0.0000	0.00
7	TENSIONR	60.11	5.24	1.98	36.23	0.987	0.000	150.97	0.00	0.0000	0.0000	0.0000	0.00
9	LAYBARGE	51.10	4.95	1.76	45.24	0.000	0.000	150.94	0.00	0.0000	0.0000	0.0000	0.00
10	LAYBARGE	46.45	4.82	1.48	49.89	0.000	0.114	150.93	0.00	0.0000	0.0000	0.0000	0.00
12	LAYBARGE	38.36	4.62	1.24	57.99	0.000	0.000	150.91	0.00	0.0000	0.0000	0.0000	0.00
13	LAYBARGE	35.35	4.57	1.00	60.99	0.000	0.251	150.90	0.00	0.0000	0.0000	0.0000	0.00
15	LAYBARGE	26.33	4.43	0.75	70.02	0.000	0.000	150.89	0.00	0.0000	0.0000	0.0000	0.00
16	LAYBARGE	23.34	4.40	0.48	73.00	0.000	0.771	150.88	0.00	0.0000	0.0000	0.0000	0.00
18	LAYBARGE	11.84	4.33	0.18	84.51	0.000	0.000	150.88	0.00	0.0000	0.0000	0.0000	0.00
19	LAYBARGE	8.86	4.33	5.99	87.48	31.706	0.000	150.04	0.00	0.0000	0.0000	0.0000	0.00
21	LAYBARGE	4.87	3.48	11.88	91.57	0.000	0.000	150.79	0.00	0.0000	0.0000	0.0000	0.00
22	LAYBARGE	2.63	3.01	11.69	93.85	0.000	2.441	150.74	0.00	0.0000	0.0000	0.0000	0.00
24	LAYBARGE	-7.28	0.98	11.46	103.98	0.000	0.000	150.52	0.00	0.0000	0.0000	0.0000	0.00
27	STINGER	-7.76	0.89	11.26	104.46	0.000	1.508	150.51	0.00	0.0000	0.0000	0.0000	0.00
29	STINGER	-16.59	-0.86	13.60	113.46	13.622	0.000	150.18	0.00	0.0000	0.0000	0.0000	0.00
32	STINGER	-26.22	-3.62	22.86	123.50	36.621	0.000	148.94	0.00	0.0000	0.0000	0.0000	0.00
34	STINGER	-35.72	-9.04	33.75	134.44	21.701	0.000	149.15	0.00	0.0000	0.0000	0.0000	0.00
36	STINGER	-38.11	-10.89	37.77	137.47	0.000	0.023	149.36	0.00	0.0000	0.0000	0.0000	0.00
38	SAGBEND	-38.92	-11.51	33.57	138.49	0.000	0.000	148.91	0.00	0.0066	0.0000	0.0069	0.00
39	SAGBEND	-44.69	-15.32	33.01	145.41	0.000	0.000	145.03	58.32	0.0063	0.0436	0.0504	0.00
40	SAGBEND	-49.80	-18.57	31.84	151.46	0.000	0.000	141.68	90.38	0.0061	0.0676	0.0742	0.00
41	SAGBEND	-54.98	-21.69	30.26	157.51	0.000	0.000	138.46	112.13	0.0058	0.0839	0.0903	0.00
42	SAGBEND	-60.25	-24.66	28.40	163.56	0.000	0.000	135.41	127.59	0.0056	0.0954	0.1017	0.00
43	SAGBEND	-65.62	-27.44	26.32	169.61	0.000	0.000	132.57	139.09	0.0054	0.1040	0.1102	0.00
44	SAGBEND	-71.10	-30.01	24.09	175.66	0.000	0.000	129.94	147.98	0.0052	0.1107	0.1167	0.00
45	SAGBEND	-76.67	-32.37	21.74	181.71	0.000	0.000	127.53	154.95	0.0050	0.1159	0.1218	0.00
46	SAGBEND	-82.33	-34.49	19.30	187.76	0.000	0.000	125.38	160.29	0.0049	0.1199	0.1257	0.00
47	SAGBEND	-88.08	-36.37	16.78	193.81	0.000	0.000	123.48	164.02	0.0047	0.1227	0.1284	0.00
48	SAGBEND	-93.91	-37.98	14.22	199.86	0.000	0.000	121.85	165.89	0.0046	0.1241	0.1297	0.00
49	SAGBEND	-99.81	-39.34	11.64	205.91	0.000	0.000	120.50	165.40	0.0045	0.1237	0.1293	0.00
50	SAGBEND	-105.76	-40.43	9.10	211.96	0.000	0.000	119.44	161.70	0.0044	0.1209	0.1265	0.00
51	SAGBEND	-111.75	-41.25	6.65	218.01	0.000	0.000	118.67	153.47	0.0044	0.1148	0.1203	0.00
52	SAGBEND	-117.77	-41.83	4.38	224.06	0.000	0.000	118.19	138.65	0.0044	0.1037	0.1092	0.00
53	SAGBEND	-123.81	-42.19	2.40	230.11	0.000	0.000	117.97	114.08	0.0043	0.0853	0.0908	0.00
54	SEABED	-129.86	-42.36	0.91	236.16	2.422	0.000	117.97	74.80	0.0043	0.0559	0.0614	0.00
55	SEABED	-135.91	-42.41	0.13	242.21	8.702	0.000	118.07	28.67	0.0043	0.0214	0.0270	0.00
56	SEABED	-141.96	-42.40	-0.09	248.26	8.891	0.000	118.09	3.73	0.0043	0.0028	0.0084	0.00
57	SEABED	-148.01	-42.39	-0.08	254.31	7.318	0.000	118.09	-3.11	0.0043	-0.0023	0.0080	0.00
58	SEABED	-154.06	-42.39	-0.03	260.36	6.300	0.000	118.08	-2.65	0.0043	-0.0020	0.0077	0.00
59	SEABED	-160.11	-42.39	-0.01	266.41	5.962	0.000	118.09	-1.06	0.0043	-0.0008	0.0065	0.00

S T A T I C P I P E C O O R D I N A T E S, F O R C E S A N D S T R A I N S

NODE NO.	PIPE SECTION	X COORD (M)	Y COORD (M)	VERT ANGLE (DEG)	PIPE LENGTH (M)	SUPPORT REACTION (KN)	SEPARA -TION (M)	AXIAL TENSION (KN)	BENDING MOMENT (KN-M)	TENSILE STRAIN (PCT)	BENDING STRAIN (PCT)	TOTAL STRAIN (PCT)	PERCNT ALLOW (PCT)
60	SEABED	-166.16	-42.39	0.00	272.46	5.944	0.000	118.09	-0.16	0.0043	-0.0001	0.0059	0.00
61	SEABED	-172.21	-42.39	0.00	278.51	5.997	0.000	118.09	0.10	0.0043	0.0001	0.0058	0.00
62	SEABED	-178.26	-42.39	0.00	284.56	6.033	0.000	118.09	0.09	0.0043	0.0001	0.0058	0.00
63	SEABED	-184.31	-42.39	0.00	290.61	6.046	0.000	118.09	0.04	0.0043	0.0000	0.0058	0.00
64	SEABED	-190.36	-42.39	0.00	296.66	6.047	0.000	118.09	0.01	0.0043	0.0000	0.0058	0.00
65	SEABED	-196.41	-42.39	0.00	302.71	6.045	0.000	118.09	0.00	0.0043	0.0000	0.0058	0.00
66	SEABED	-202.46	-42.39	0.00	308.76	6.044	0.000	118.09	0.00	0.0043	0.0000	0.0058	0.00
67	SEABED	-208.51	-42.39	0.00	314.81	6.044	0.000	118.09	0.00	0.0043	0.0000	0.0058	0.00
68	SEABED	-214.56	-42.39	0.00	320.86	6.043	0.000	118.09	0.00	0.0043	0.0000	0.0058	0.00
69	SEABED	-220.61	-42.39	0.00	326.91	0.000	0.000	118.09	0.00	0.0043	0.0000	0.0058	0.00

S T A T I C P I P E C O O R D I N A T E S, F O R C E S A N D S T R A I N S

NODE NO.	PIPE SECTION	X COORD (M)	Y COORD (M)	VERT ANGLE (DEG)	PIPE LENGTH (M)	SUPPORT REACTION (KN)	SEPARA -TION (M)	AXIAL TENSION (KN)	BENDING MOMENT (KN-M)	TENSILE STRAIN (PCT)	BENDING STRAIN (PCT)	TOTAL STRAIN (PCT)	PERCNT ALLOW (PCT)
1	LAYBARGE	96.31	6.41	1.69	0.00	0.655	0.000	0.00	0.00	0.0000	0.0000	0.0000	0.00
3	LAYBARGE	84.28	6.05	1.70	12.04	1.244	0.000	-0.04	0.00	0.0000	0.0000	0.0000	0.00
5	LAYBARGE	73.45	5.73	1.89	22.87	1.315	0.000	-0.08	0.00	0.0000	0.0000	0.0000	0.00
7	TENSIONR	60.11	5.24	1.98	36.23	0.987	0.000	150.98	0.00	0.0000	0.0000	0.0000	0.00
9	LAYBARGE	51.10	4.95	1.76	45.24	0.000	0.000	150.94	0.00	0.0000	0.0000	0.0000	0.00
10	LAYBARGE	46.45	4.82	1.48	49.89	0.000	0.114	150.93	0.00	0.0000	0.0000	0.0000	0.00
12	LAYBARGE	38.36	4.62	1.24	57.99	0.000	0.000	150.91	0.00	0.0000	0.0000	0.0000	0.00
13	LAYBARGE	35.35	4.57	1.00	60.99	0.000	0.251	150.90	0.00	0.0000	0.0000	0.0000	0.00
15	LAYBARGE	26.33	4.43	0.75	70.02	0.000	0.000	150.89	0.00	0.0000	0.0000	0.0000	0.00
16	LAYBARGE	23.34	4.40	0.48	73.01	0.000	0.771	150.88	0.00	0.0000	0.0000	0.0000	0.00
18	LAYBARGE	11.83	4.33	0.18	84.51	0.000	0.000	150.88	0.00	0.0000	0.0000	0.0000	0.00
19	LAYBARGE	8.86	4.33	4.72	87.48	25.039	0.000	150.36	0.00	0.0000	0.0000	0.0000	0.00
21	LAYBARGE	4.83	3.66	9.34	91.57	0.000	0.000	150.81	0.00	0.0000	0.0000	0.0000	0.00
22	LAYBARGE	2.64	3.30	9.15	93.79	0.000	2.722	150.77	0.00	0.0000	0.0000	0.0000	0.00
24	LAYBARGE	-7.36	1.71	8.92	103.91	0.000	0.000	150.60	0.00	0.0000	0.0000	0.0000	0.00
27	STINGER	-7.76	1.65	8.71	104.32	0.000	1.940	150.59	0.00	0.0000	0.0000	0.0000	0.00
29	STINGER	-16.63	0.31	8.43	113.29	0.000	0.292	150.44	0.00	0.0000	0.0000	0.0000	0.00
32	STINGER	-26.52	-1.13	11.40	123.29	17.476	0.000	150.05	0.00	0.0000	0.0000	0.0000	0.00
34	STINGER	-37.10	-3.87	18.84	134.23	23.096	0.000	149.58	0.00	0.0000	0.0000	0.0000	0.00
36	STINGER	-39.89	-5.06	24.16	137.26	5.872	0.000	149.88	0.00	0.0000	0.0000	0.0000	0.00
38	SAGBEND	-47.24	-8.52	25.07	145.39	0.000	0.000	149.58	0.00	0.0000	0.0000	0.0000	0.00
39	SAGBEND	-52.73	-11.07	24.86	151.44	0.000	0.000	149.34	0.00	0.0000	0.0000	0.0000	0.00
40	SAGBEND	-58.22	-13.61	24.66	157.49	0.000	0.000	149.10	0.00	0.0000	0.0000	0.0000	0.00
41	SAGBEND	-63.73	-16.12	24.46	163.54	0.000	0.000	148.86	0.00	0.0000	0.0000	0.0000	0.00
42	SAGBEND	-69.24	-18.62	24.26	169.59	0.000	0.000	148.63	0.00	0.0000	0.0000	0.0000	0.00
43	SAGBEND	-74.76	-21.09	24.06	175.64	0.000	0.000	148.39	0.00	0.0000	0.0000	0.0000	0.00
44	SAGBEND	-80.29	-23.55	23.86	181.69	0.000	0.000	148.16	0.00	0.0000	0.0000	0.0000	0.00
45	SAGBEND	-85.82	-25.99	23.65	187.74	0.000	0.000	147.93	0.00	0.0000	0.0000	0.0000	0.00
46	SAGBEND	-91.37	-28.40	23.45	193.79	0.000	0.000	147.70	0.00	0.0000	0.0000	0.0000	0.00
47	SAGBEND	-94.23	-29.64	23.35	196.90	0.000	0.000	147.59	0.00	0.0000	0.0000	0.0000	0.00
48	SAGBEND	-97.09	-30.87	18.60	200.02	0.000	0.000	146.99	0.00	0.0060	0.0000	0.0069	0.00
49	SAGBEND	-102.66	-32.73	18.15	205.89	0.000	0.000	145.06	56.06	0.0059	0.0419	0.0487	0.00
50	SAGBEND	-108.42	-34.56	16.97	211.94	0.000	0.000	143.11	92.37	0.0057	0.0691	0.0757	0.00
51	SAGBEND	-114.23	-36.25	15.35	217.99	0.000	0.000	141.32	115.08	0.0056	0.0861	0.0926	0.00
52	SAGBEND	-120.09	-37.75	13.45	224.04	0.000	0.000	139.74	128.99	0.0055	0.0965	0.1029	0.00
53	SAGBEND	-126.00	-39.06	11.38	230.09	0.000	0.000	138.39	136.75	0.0054	0.1023	0.1087	0.00
54	SAGBEND	-131.95	-40.14	9.23	236.14	0.000	0.000	137.30	139.57	0.0053	0.1044	0.1107	0.00
55	SAGBEND	-137.94	-41.00	7.08	242.19	0.000	0.000	136.45	137.61	0.0052	0.1029	0.1092	0.00
56	SAGBEND	-143.96	-41.63	4.99	248.24	0.000	0.000	135.86	130.02	0.0052	0.0972	0.1035	0.00
57	SAGBEND	-149.99	-42.06	3.08	254.29	0.000	0.000	135.52	114.82	0.0052	0.0859	0.0921	0.00
58	SAGBEND	-156.04	-42.29	1.49	260.34	0.246	0.000	135.40	88.38	0.0051	0.0661	0.0724	0.00
59	SEABED	-162.09	-42.39	0.42	266.39	5.617	0.000	135.45	46.97	0.0051	0.0351	0.0414	0.00

S T A T I C P I P E C O O R D I N A T E S, F O R C E S A N D S T R A I N S

NODE NO.	PIPE SECTION	X COORD (M)	Y COORD (M)	VERT ANGLE (DEG)	PIPE LENGTH (M)	SUPPORT REACTION (KN)	SEPARA -TION (M)	AXIAL TENSION (KN)	BENDING MOMENT (KN-M)	TENSILE STRAIN (PCT)	BENDING STRAIN (PCT)	TOTAL STRAIN (PCT)	PERCNT ALLOW (PCT)
60	SEABED	-168.14	-42.40	-0.01	272.44	8.902	0.000	135.50	13.06	0.0051	0.0098	0.0161	0.00
61	SEABED	-174.19	-42.40	-0.09	278.49	7.938	0.000	135.51	-0.67	0.0051	-0.0005	0.0070	0.00
62	SEABED	-180.24	-42.39	-0.05	284.54	6.690	0.000	135.50	-2.87	0.0051	-0.0021	0.0086	0.00
63	SEABED	-186.29	-42.39	-0.02	290.59	6.091	0.000	135.50	-1.67	0.0051	-0.0012	0.0077	0.00
64	SEABED	-192.34	-42.39	0.00	296.64	5.952	0.000	135.50	-0.50	0.0051	-0.0004	0.0069	0.00
65	SEABED	-198.39	-42.39	0.00	302.69	5.977	0.000	135.50	0.00	0.0051	0.0000	0.0065	0.00
66	SEABED	-204.44	-42.39	0.00	308.74	6.019	0.000	135.50	0.09	0.0051	0.0001	0.0066	0.00
67	SEABED	-210.49	-42.39	0.00	314.79	6.041	0.000	135.50	0.06	0.0051	0.0000	0.0066	0.00
68	SEABED	-216.54	-42.39	0.00	320.84	6.046	0.000	135.50	0.02	0.0051	0.0000	0.0065	0.00
69	SEABED	-222.59	-42.39	0.00	326.89	6.046	0.000	135.50	0.00	0.0051	0.0000	0.0065	0.00
70	SEABED	-228.64	-42.39	0.00	332.94	6.044	0.000	135.50	0.00	0.0051	0.0000	0.0065	0.00
71	SEABED	-234.69	-42.39	0.00	338.99	6.044	0.000	135.50	0.00	0.0051	0.0000	0.0065	0.00
72	SEABED	-240.74	-42.39	0.00	345.04	6.043	0.000	135.50	0.00	0.0051	0.0000	0.0065	0.00
73	SEABED	-246.79	-42.39	0.00	351.09	6.043	0.000	135.50	0.00	0.0051	0.0000	0.0065	0.00
74	SEABED	-252.84	-42.39	0.00	357.14	6.043	0.000	135.50	0.00	0.0051	0.0000	0.0065	0.00
75	SEABED	-258.89	-42.39	0.00	363.19	6.044	0.000	135.50	0.00	0.0051	0.0000	0.0065	0.00
76	SEABED	-264.94	-42.39	0.00	369.24	6.044	0.000	135.50	0.00	0.0051	0.0000	0.0065	0.00
77	SEABED	-270.99	-42.39	0.00	375.29	6.044	0.000	135.50	0.00	0.0051	0.0000	0.0065	0.00
78	SEABED	-277.04	-42.39	0.00	381.34	6.044	0.000	135.50	0.00	0.0051	0.0000	0.0065	0.00
79	SEABED	-283.09	-42.39	0.00	387.39	6.044	0.000	135.50	0.00	0.0051	0.0000	0.0065	0.00
80	SEABED	-289.14	-42.39	0.00	393.44	6.044	0.000	135.50	0.00	0.0051	0.0000	0.0065	0.00
81	SEABED	-295.19	-42.39	0.00	399.49	6.044	0.000	135.50	0.00	0.0051	0.0000	0.0065	0.00
82	SEABED	-301.24	-42.39	0.00	405.54	6.044	0.000	135.50	0.00	0.0051	0.0000	0.0065	0.00
83	SEABED	-307.29	-42.39	0.00	411.59	6.044	0.000	135.50	0.00	0.0051	0.0000	0.0065	0.00
84	SEABED	-313.34	-42.39	0.00	417.64	6.044	0.000	135.50	0.00	0.0051	0.0000	0.0065	0.00
85	SEABED	-319.39	-42.39	0.00	423.69	6.044	0.000	135.50	0.00	0.0051	0.0000	0.0065	0.00
86	SEABED	-325.44	-42.39	0.00	429.74	6.044	0.000	135.50	0.00	0.0051	0.0000	0.0065	0.00
87	SEABED	-331.49	-42.39	0.00	435.79	6.044	0.000	135.50	0.00	0.0051	0.0000	0.0065	0.00
88	SEABED	-337.54	-42.39	0.00	441.84	6.044	0.000	135.50	0.00	0.0051	0.0000	0.0065	0.00
89	SEABED	-343.59	-42.39	0.00	447.89	6.044	0.000	135.50	0.00	0.0051	0.0000	0.0065	0.00
90	SEABED	-349.64	-42.39	0.00	453.94	6.044	0.000	135.50	0.00	0.0051	0.0000	0.0065	0.00
91	SEABED	-355.69	-42.39	0.00	459.99	6.044	0.000	135.50	0.00	0.0051	0.0000	0.0065	0.00

92	SEABED	-361.74	-42.39	0.00	466.04	6.044	0.000	135.50	0.00	0.0051	0.0000	0.0065	0.00
93	SEABED	-367.79	-42.39	0.00	472.09	6.044	0.000	135.50	0.00	0.0051	0.0000	0.0065	0.00
94	SEABED	-373.84	-42.39	0.00	478.14	6.044	0.000	135.50	0.00	0.0051	0.0000	0.0065	0.00
95	SEABED	-379.89	-42.39	0.00	484.19	6.044	0.000	135.50	0.00	0.0051	0.0000	0.0065	0.00
96	SEABED	-385.94	-42.39	0.00	490.24	6.044	0.000	135.50	0.00	0.0051	0.0000	0.0065	0.00
97	SEABED	-391.99	-42.39	0.00	496.29	6.044	0.000	135.50	0.00	0.0051	0.0000	0.0065	0.00
98	SEABED	-398.04	-42.39	0.00	502.34	6.044	0.000	135.50	0.00	0.0051	0.0000	0.0065	0.00
99	SEABED	-404.09	-42.39	0.00	508.39	6.044	0.000	135.50	0.00	0.0051	0.0000	0.0065	0.00
100	SEABED	-410.14	-42.39	0.00	514.44	6.044	0.000	135.50	0.00	0.0051	0.0000	0.0065	0.00
101	SEABED	-416.19	-42.39	0.00	520.49	6.044	0.000	135.50	0.00	0.0051	0.0000	0.0065	0.00
102	SEABED	-422.24	-42.39	0.00	526.54	6.044	0.000	135.50	0.00	0.0051	0.0000	0.0065	0.00
103	SEABED	-428.29	-42.39	0.00	532.59	6.044	0.000	135.50	0.00	0.0051	0.0000	0.0065	0.00
104	SEABED	-434.34	-42.39	0.00	538.64	6.044	0.000	135.50	0.00	0.0051	0.0000	0.0065	0.00

S T A T I C P I P E C O O R D I N A T E S, F O R C E S A N D S T R A I N S

NODE NO.	PIPE SECTION	X COORD (M)	Y COORD (M)	VERT ANGLE (DEG)	PIPE LENGTH (M)	SUPPORT REACTION (KN)	SEPARA -TION (M)	AXIAL TENSION (KN)	BENDING MOMENT (KN-M)	TENSILE STRAIN (PCT)	BENDING STRAIN (PCT)	TOTAL STRAIN (PCT)	PERCNT ALLOW (PCT)
105	SEABED	-440.39	-42.39	0.00	544.69	6.044	0.000	135.50	0.00	0.0051	0.0000	0.0065	0.00
106	SEABED	-446.44	-42.39	0.00	550.74	6.044	0.000	135.50	0.00	0.0051	0.0000	0.0065	0.00
107	SEABED	-452.49	-42.39	0.00	556.79	0.000	0.000	135.50	0.00	0.0051	0.0000	0.0065	0.00

S T A T I C P I P E C O O R D I N A T E S, F O R C E S A N D S T R A I N S

NODE NO.	PIPE SECTION	X COORD (M)	Y COORD (M)	VERT ANGLE (DEG)	PIPE LENGTH (M)	SUPPORT REACTION (KN)	SEPARA -TION (M)	AXIAL TENSION (KN)	BENDING MOMENT (KN-M)	TENSILE STRAIN (PCT)	BENDING STRAIN (PCT)	TOTAL STRAIN (PCT)	PERCNT ALLOW (PCT)
1	LAYBARGE	96.31	6.41	1.69	0.00	0.655	0.000	0.00	0.00	0.0000	0.0000	0.0000	0.00
3	LAYBARGE	84.28	6.05	1.70	12.04	1.244	0.000	-0.04	0.00	0.0000	0.0000	0.0000	0.00
5	LAYBARGE	73.45	5.73	1.89	22.87	1.315	0.000	-0.08	0.00	0.0000	0.0000	0.0000	0.00
7	TENSIONR	60.11	5.24	2.28	36.23	1.472	0.000	71.57	0.00	0.0000	0.0000	0.0000	0.00
9	LAYBARGE	51.10	4.85	2.18	45.24	0.000	0.000	71.53	0.00	0.0000	0.0000	0.0000	0.00
10	LAYBARGE	46.45	4.70	1.87	49.89	0.655	0.000	71.51	0.00	0.0000	0.0000	0.0000	0.00
12	LAYBARGE	38.36	4.44	1.61	57.99	0.000	0.000	71.49	0.00	0.0000	0.0000	0.0000	0.00
13	LAYBARGE	35.36	4.37	1.11	60.99	0.000	0.053	71.48	0.00	0.0000	0.0000	0.0000	0.00
15	LAYBARGE	26.33	4.23	0.59	70.02	0.000	0.000	71.46	0.00	0.0000	0.0000	0.0000	0.00
16	LAYBARGE	23.34	4.22	0.01	73.01	0.000	0.593	71.46	0.00	0.0000	0.0000	0.0000	0.00
18	LAYBARGE	11.84	4.28	-0.62	84.51	0.000	0.000	71.47	0.00	0.0000	0.0000	0.0000	0.00
19	LAYBARGE	8.86	4.33	4.12	87.49	12.975	0.000	71.18	0.00	0.0000	0.0000	0.0000	0.00
21	LAYBARGE	4.83	3.68	9.04	91.58	0.000	0.000	71.41	0.00	0.0000	0.0000	0.0000	0.00
22	LAYBARGE	2.70	3.34	8.64	93.73	0.000	2.753	71.37	0.00	0.0000	0.0000	0.0000	0.00
24	LAYBARGE	-7.31	1.87	8.14	103.85	0.000	0.000	71.21	0.00	0.0000	0.0000	0.0000	0.00
27	STINGER	-7.71	1.82	7.71	104.25	0.000	2.088	71.21	0.00	0.0000	0.0000	0.0000	0.00
29	STINGER	-16.63	0.64	7.11	113.25	0.000	0.606	71.08	0.00	0.0000	0.0000	0.0000	0.00
32	STINGER	-26.49	-0.52	7.38	123.18	2.685	0.000	70.95	0.00	0.0000	0.0000	0.0000	0.00
34	STINGER	-37.31	-2.05	12.35	134.12	11.237	0.000	70.58	0.00	0.0000	0.0000	0.0000	0.00
36	STINGER	-40.22	-2.92	24.92	137.15	20.824	0.000	69.94	0.00	0.0000	0.0000	0.0000	0.00
38	SAGBEND	-47.11	-7.43	32.96	145.40	0.000	0.000	70.30	0.00	0.0000	0.0000	0.0000	0.00
39	SAGBEND	-52.20	-10.70	32.54	151.45	0.000	0.000	70.00	0.00	0.0000	0.0000	0.0000	0.00
40	SAGBEND	-57.31	-13.94	32.14	157.50	0.000	0.000	69.69	0.00	0.0000	0.0000	0.0000	0.00
41	SAGBEND	-62.44	-17.14	31.74	163.55	0.000	0.000	69.39	0.00	0.0000	0.0000	0.0000	0.00
42	SAGBEND	-67.60	-20.30	31.34	169.60	0.000	0.000	69.09	0.00	0.0000	0.0000	0.0000	0.00
43	SAGBEND	-72.78	-23.43	30.93	175.65	0.000	0.000	68.79	0.00	0.0000	0.0000	0.0000	0.00
44	SAGBEND	-77.98	-26.52	30.52	181.70	0.000	0.000	68.50	0.00	0.0000	0.0000	0.0000	0.00
45	SAGBEND	-83.20	-29.58	30.11	187.75	0.000	0.000	68.21	0.00	0.0000	0.0000	0.0000	0.00
46	SAGBEND	-88.45	-32.59	29.69	193.80	0.000	0.000	67.93	0.00	0.0000	0.0000	0.0000	0.00
47	SAGBEND	-91.15	-34.13	29.47	196.91	0.000	0.000	67.78	0.00	0.0000	0.0000	0.0000	0.00
48	SAGBEND	-93.87	-35.65	15.57	200.04	0.000	0.000	65.72	0.00	0.0021	0.0000	0.0034	0.00
49	SAGBEND	-99.53	-37.21	14.94	205.91	0.000	0.000	64.02	78.80	0.0020	0.0589	0.0619	0.00
50	SAGBEND	-105.40	-38.69	13.27	211.96	0.000	0.000	62.29	133.11	0.0018	0.0996	0.1024	0.00
51	SAGBEND	-111.31	-39.96	10.93	218.01	0.000	0.000	60.80	165.20	0.0017	0.1236	0.1263	0.00
52	SAGBEND	-117.28	-40.97	8.24	224.06	0.000	0.000	59.70	177.69	0.0017	0.1329	0.1356	0.00
53	SAGBEND	-123.28	-41.70	5.51	230.11	0.000	0.000	59.03	171.22	0.0016	0.1281	0.1308	0.00
54	SAGBEND	-129.32	-42.14	3.03	236.16	0.000	0.000	58.77	144.77	0.0016	0.1083	0.1110	0.00
55	SEABED	-135.36	-42.36	1.14	242.21	2.713	0.000	58.82	95.57	0.0016	0.0715	0.0742	0.00
56	SEABED	-141.41	-42.41	0.13	248.26	10.063	0.000	58.99	36.27	0.0016	0.0271	0.0299	0.00
57	SEABED	-147.46	-42.41	-0.14	254.31	9.893	0.000	59.02	3.98	0.0016	0.0030	0.0060	0.00
58	SEABED	-153.51	-42.40	-0.11	260.36	7.661	0.000	59.01	-4.60	0.0016	-0.0034	0.0064	0.00
59	SEABED	-159.56	-42.39	-0.04	266.41	6.302	0.000	59.01	-3.64	0.0016	-0.0027	0.0057	0.00

S T A T I C P I P E C O O R D I N A T E S, F O R C E S A N D S T R A I N S

NODE NO.	PIPE SECTION	X COORD (M)	Y COORD (M)	VERT ANGLE (DEG)	PIPE LENGTH (M)	SUPPORT REACTION (KN)	SEPARA -TION (M)	AXIAL TENSION (KN)	BENDING MOMENT (KN-M)	TENSILE STRAIN (PCT)	BENDING STRAIN (PCT)	TOTAL STRAIN (PCT)	PERCNT ALLOW (PCT)
60	SEABED	-165.61	-42.39	-0.01	272.46	5.889	0.000	59.01	-1.38	0.0016	-0.0010	0.0042	0.00
61	SEABED	-171.66	-42.39	0.01	278.51	5.897	0.000	59.01	-0.15	0.0016	-0.0001	0.0034	0.00
62	SEABED	-177.71	-42.39	0.00	284.56	5.982	0.000	59.01	0.18	0.0016	0.0001	0.0034	0.00
63	SEABED	-183.76	-42.39	0.00	290.61	6.034	0.000	59.01	0.14	0.0016	0.0001	0.0034	0.00
64	SEABED	-189.81	-42.39	0.00	296.66	6.050	0.000	59.01	0.05	0.0016	0.0000	0.0033	0.00
65	SEABED	-195.86	-42.39	0.00	302.71	6.049	0.000	59.01	0.01	0.0016	0.0000	0.0033	0.00
66	SEABED	-201.91	-42.39	0.00	308.76	6.046	0.000	59.01	-0.01	0.0016	0.0000	0.0033	0.00
67	SEABED	-207.96	-42.39	0.00	314.81	6.044	0.000	59.01	-0.01	0.0016	0.0000	0.0033	0.00
68	SEABED	-214.01	-42.39	0.00	320.86	6.044	0.000	59.01	0.00	0.0016	0.0000	0.0033	0.00
69	SEABED	-220.06	-42.39	0.00	326.91	6.044	0.000	59.01	0.00	0.0016	0.0000	0.0033	0.00
70	SEABED	-226.11	-42.39	0.00	332.96	6.044	0.000	59.01	0.00	0.0016	0.0000	0.0033	0.00
71	SEABED	-232.16	-42.39	0.00	339.01	6.044	0.000	59.01	0.00	0.0016	0.0000	0.0033	0.00
72	SEABED	-238.21	-42.39	0.00	345.06	6.044	0.000	59.01	0.00	0.0016	0.0000	0.0033	0.00
73	SEABED	-244.26	-42.39	0.00	351.11	6.044	0.000	59.01	0.00	0.0016	0.0000	0.0033	0.00
74	SEABED	-250.31	-42.39	0.00	357.16	6.044	0.000	59.01	0.00	0.0016	0.0000	0.0033	0.00
75	SEABED	-256.36	-42.39	0.00	363.21	6.044	0.000	59.01	0.00	0.0016	0.0000	0.0033	0.00
76	SEABED	-262.41	-42.39	0.00	369.26	6.044	0.000	59.01	0.00	0.0016	0.0000	0.0033	0.00
77	SEABED	-268.46	-42.39	0.00	375.31	6.044	0.000	59.01	0.00	0.0016	0.0000	0.0033	0.00
78	SEABED	-274.51	-42.39	0.00	381.36	6.044	0.000	59.01	0.00	0.0016	0.0000	0.0033	0.00
79	SEABED	-280.56	-42.39	0.00	387.41	6.044	0.000	59.01	0.00	0.0016	0.0000	0.0033	0.00
80	SEABED	-286.61	-42.39	0.00	393.46	6.044	0.000	59.01	0.00	0.0016	0.0000	0.0033	0.00
81	SEABED	-292.66	-42.39	0.00	399.51	6.044	0.000	59.01	0.00	0.0016	0.0000	0.0033	0.00
82	SEABED	-298.71	-42.39	0.00	405.56	6.044	0.000	59.01	0.00	0.0016	0.0000	0.0033	0.00
83	SEABED	-304.76	-42.39	0.00	411.61	6.044	0.000	59.01	0.00	0.0016	0.0000	0.0033	0.00
84	SEABED	-310.81	-42.39	0.00	417.66	6.044	0.000	59.01	0.00	0.0016	0.0000	0.0033	0.00
85	SEABED	-316.86	-42.39	0.00	423.71	6.044	0.000	59.01	0.00	0.0016	0.0000	0.0033	0.00
86	SEABED	-322.91	-42.39	0.00	429.76	6.044	0.000	59.01	0.00	0.0016	0.0000	0.0033	0.00
87	SEABED	-328.96	-42.39	0.00	435.81	6.044	0.000	59.01	0.00	0.0016	0.0000	0.0033	0.00
88	SEABED	-335.01	-42.39	0.00	441.86	6.044	0.000	59.01	0.00	0.0016	0.0000	0.0033	0.00
89	SEABED	-341.06	-42.39	0.00	447.91	0.000	0.000	59.01	0.00	0.0016	0.0000	0.0033	0.00

S T A T I C P I P E C O O R D I N A T E S, F O R C E S A N D S T R A I N S

NODE NO.	PIPE SECTION	X COORD (M)	Y COORD (M)	VERT ANGLE (DEG)	PIPE LENGTH (M)	SUPPORT REACTION (KN)	SEPARA -TION (M)	AXIAL TENSION (KN)	BENDING MOMENT (KN-M)	TENSILE STRAIN (PCT)	BENDING STRAIN (PCT)	TOTAL STRAIN (PCT)	PERCNT ALLOW (PCT)
1	LAYBARGE	96.31	6.41	1.69	0.00	0.655	0.000	0.00	0.00	0.0000	0.0000	0.0000	0.00
3	LAYBARGE	84.28	6.05	1.70	12.04	1.244	0.000	-0.04	0.00	0.0000	0.0000	0.0000	0.00
5	LAYBARGE	73.45	5.73	1.89	22.87	1.315	0.000	-0.08	0.00	0.0000	0.0000	0.0000	0.00
7	TENSIONR	60.11	5.24	2.28	36.23	1.472	0.000	71.57	0.00	0.0000	0.0000	0.0000	0.00
9	LAYBARGE	51.10	4.85	2.18	45.24	0.000	0.000	71.53	0.00	0.0000	0.0000	0.0000	0.00
10	LAYBARGE	46.45	4.70	1.87	49.89	0.654	0.000	71.52	0.00	0.0000	0.0000	0.0000	0.00
12	LAYBARGE	38.36	4.44	1.61	57.99	0.000	0.000	71.49	0.00	0.0000	0.0000	0.0000	0.00
13	LAYBARGE	35.36	4.37	1.11	60.99	0.000	0.053	71.48	0.00	0.0000	0.0000	0.0000	0.00
15	LAYBARGE	26.33	4.23	0.58	70.02	0.000	0.000	71.47	0.00	0.0000	0.0000	0.0000	0.00
16	LAYBARGE	23.35	4.22	0.01	73.00	0.000	0.594	71.46	0.00	0.0000	0.0000	0.0000	0.00
18	LAYBARGE	11.84	4.28	-0.62	84.51	0.000	0.000	71.47	0.00	0.0000	0.0000	0.0000	0.00
19	LAYBARGE	8.87	4.33	3.35	87.48	11.077	0.000	71.26	0.00	0.0000	0.0000	0.0000	0.00
21	LAYBARGE	4.82	3.79	7.51	91.57	0.000	0.000	71.42	0.00	0.0000	0.0000	0.0000	0.00
22	LAYBARGE	2.71	3.51	7.11	93.70	0.000	2.919	71.39	0.00	0.0000	0.0000	0.0000	0.00
24	LAYBARGE	-7.34	2.31	6.61	103.82	0.000	0.000	71.26	0.00	0.0000	0.0000	0.0000	0.00
27	STINGER	-7.74	2.26	6.18	104.22	0.000	2.538	71.26	0.00	0.0000	0.0000	0.0000	0.00
29	STINGER	-16.72	1.32	5.57	113.25	0.000	1.304	71.15	0.00	0.0000	0.0000	0.0000	0.00
32	STINGER	-26.48	0.44	4.72	123.05	0.000	0.436	71.06	0.00	0.0000	0.0000	0.0000	0.00
34	STINGER	-37.38	-0.37	7.46	133.98	8.570	0.000	70.83	0.00	0.0000	0.0000	0.0000	0.00
36	STINGER	-40.35	-0.93	15.82	137.01	13.322	0.000	70.59	0.00	0.0000	0.0000	0.0000	0.00
38	SAGBEND	-48.17	-3.93	20.75	145.39	0.000	0.000	70.63	0.00	0.0000	0.0000	0.0000	0.00
39	SAGBEND	-53.83	-6.05	20.27	151.44	0.000	0.000	70.43	0.00	0.0000	0.0000	0.0000	0.00
40	SAGBEND	-59.52	-8.13	19.84	157.49	0.000	0.000	70.24	0.00	0.0000	0.0000	0.0000	0.00

41	SAGBEND	-65.22	-10.16	19.40	163.54	0.000	0.000	70.05	0.00	0.0000	0.0000	0.0000	0.00
42	SAGBEND	-70.93	-12.14	18.95	169.59	0.000	0.000	69.86	0.00	0.0000	0.0000	0.0000	0.00
43	SAGBEND	-76.66	-14.09	18.51	175.64	0.000	0.000	69.67	0.00	0.0000	0.0000	0.0000	0.00
44	SAGBEND	-82.40	-15.99	18.06	181.69	0.000	0.000	69.50	0.00	0.0000	0.0000	0.0000	0.00
45	SAGBEND	-88.16	-17.84	17.61	187.74	0.000	0.000	69.32	0.00	0.0000	0.0000	0.0000	0.00
46	SAGBEND	-93.94	-19.65	17.16	193.79	0.000	0.000	69.15	0.00	0.0000	0.0000	0.0000	0.00
47	SAGBEND	-99.73	-21.41	16.71	199.84	0.000	0.000	68.98	0.00	0.0000	0.0000	0.0000	0.00
48	SAGBEND	-105.53	-23.12	16.25	205.88	0.000	0.000	68.82	0.00	0.0000	0.0000	0.0000	0.00
49	SAGBEND	-111.34	-24.79	15.79	211.93	0.000	0.000	68.66	0.00	0.0000	0.0000	0.0000	0.00
50	SAGBEND	-117.17	-26.42	15.33	217.98	0.000	0.000	68.51	0.00	0.0000	0.0000	0.0000	0.00
51	SAGBEND	-123.01	-27.99	14.87	224.03	0.000	0.000	68.36	0.00	0.0000	0.0000	0.0000	0.00
52	SAGBEND	-128.86	-29.52	14.40	230.08	0.000	0.000	68.22	0.00	0.0000	0.0000	0.0000	0.00
53	SAGBEND	-134.73	-31.00	13.94	236.13	0.000	0.000	68.08	0.00	0.0000	0.0000	0.0000	0.00
54	SAGBEND	-140.61	-32.44	13.47	242.18	0.000	0.000	67.94	0.00	0.0000	0.0000	0.0000	0.00
55	SAGBEND	-146.50	-33.82	13.00	248.23	0.000	0.000	67.81	0.00	0.0000	0.0000	0.0000	0.00
56	SAGBEND	-152.40	-35.16	12.53	254.28	0.000	0.000	67.68	0.00	0.0000	0.0000	0.0000	0.00
57	SAGBEND	-158.31	-36.44	12.05	260.33	0.000	0.000	67.56	0.00	0.0000	0.0000	0.0000	0.00
58	SAGBEND	-164.23	-37.68	11.58	266.38	0.000	0.000	67.44	0.00	0.0000	0.0000	0.0000	0.00
59	SAGBEND	-170.16	-38.87	11.10	272.43	0.000	0.000	67.33	0.00	0.0000	0.0000	0.0000	0.00
60	SAGBEND	-176.10	-40.01	10.62	278.48	0.000	0.000	67.22	0.00	0.0000	0.0000	0.0000	0.00

S T A T I C P I P E C O O R D I N A T E S, F O R C E S A N D S T R A I N S

NODE NO.	PIPE SECTION	X COORD (M)	Y COORD (M)	VERT ANGLE (DEG)	PIPE LENGTH (M)	SUPPORT REACTION (KN)	SEPARA -TION (M)	AXIAL TENSION (KN)	BENDING MOMENT (KN-M)	TENSILE STRAIN (PCT)	BENDING STRAIN (PCT)	TOTAL STRAIN (PCT)	PERCNT ALLOW (PCT)
61	SAGBEND	-182.06	-41.10	10.14	284.53	0.000	0.000	67.12	0.00	0.0000	0.0000	0.0000	0.00
62	SAGBEND	-187.45	-42.05	1.79	290.02	0.000	0.000	66.39	0.00	0.0019	0.0000	0.0036	0.00
63	SAGBEND	-194.07	-42.24	1.38	296.64	0.000	0.000	66.17	40.39	0.0019	0.0302	0.0333	0.00
64	SAGBEND	-200.12	-42.35	0.70	302.69	1.288	0.000	66.05	43.18	0.0019	0.0323	0.0354	0.00
65	SEABED	-206.17	-42.39	0.18	308.74	6.406	0.000	66.06	22.34	0.0019	0.0167	0.0198	0.00
66	SEABED	-212.22	-42.40	-0.02	314.79	7.670	0.000	66.07	5.54	0.0019	0.0041	0.0074	0.00
67	SEABED	-218.27	-42.39	-0.05	320.84	6.988	0.000	66.07	-0.89	0.0019	-0.0007	0.0042	0.00
68	SEABED	-224.32	-42.39	-0.03	326.89	6.317	0.000	66.07	-1.63	0.0019	-0.0012	0.0047	0.00
69	SEABED	-230.37	-42.39	-0.01	332.94	6.030	0.000	66.07	-0.85	0.0019	-0.0006	0.0041	0.00
70	SEABED	-236.42	-42.39	0.00	338.99	5.982	0.000	66.07	-0.21	0.0019	-0.0002	0.0037	0.00
71	SEABED	-242.47	-42.39	0.00	345.04	6.008	0.000	66.07	0.03	0.0019	0.0000	0.0036	0.00
72	SEABED	-248.52	-42.39	0.00	351.09	6.033	0.000	66.07	0.06	0.0019	0.0000	0.0036	0.00
73	SEABED	-254.57	-42.39	0.00	357.14	6.044	0.000	66.07	0.03	0.0019	0.0000	0.0036	0.00
74	SEABED	-260.62	-42.39	0.00	363.19	6.046	0.000	66.07	0.01	0.0019	0.0000	0.0036	0.00
75	SEABED	-266.67	-42.39	0.00	369.24	6.045	0.000	66.07	0.00	0.0019	0.0000	0.0036	0.00
76	SEABED	-272.72	-42.39	0.00	375.29	6.044	0.000	66.07	0.00	0.0019	0.0000	0.0036	0.00
77	SEABED	-278.77	-42.39	0.00	381.34	6.044	0.000	66.07	0.00	0.0019	0.0000	0.0036	0.00
78	SEABED	-284.82	-42.39	0.00	387.39	6.044	0.000	66.07	0.00	0.0019	0.0000	0.0036	0.00
79	SEABED	-290.87	-42.39	0.00	393.44	6.044	0.000	66.07	0.00	0.0019	0.0000	0.0036	0.00
80	SEABED	-296.92	-42.39	0.00	399.49	6.044	0.000	66.07	0.00	0.0019	0.0000	0.0036	0.00
81	SEABED	-302.97	-42.39	0.00	405.54	6.044	0.000	66.07	0.00	0.0019	0.0000	0.0036	0.00
82	SEABED	-309.02	-42.39	0.00	411.59	6.044	0.000	66.07	0.00	0.0019	0.0000	0.0036	0.00
83	SEABED	-315.07	-42.39	0.00	417.64	6.044	0.000	66.07	0.00	0.0019	0.0000	0.0036	0.00
84	SEABED	-321.12	-42.39	0.00	423.69	6.044	0.000	66.07	0.00	0.0019	0.0000	0.0036	0.00
85	SEABED	-327.17	-42.39	0.00	429.74	6.044	0.000	66.07	0.00	0.0019	0.0000	0.0036	0.00
86	SEABED	-333.22	-42.39	0.00	435.79	6.044	0.000	66.07	0.00	0.0019	0.0000	0.0036	0.00
87	SEABED	-339.27	-42.39	0.00	441.84	6.044	0.000	66.07	0.00	0.0019	0.0000	0.0036	0.00
88	SEABED	-345.32	-42.39	0.00	447.89	0.000	0.000	66.07	0.00	0.0019	0.0000	0.0036	0.00

S T A T I C P I P E C O O R D I N A T E S, F O R C E S A N D S T R A I N S

NODE NO.	PIPE SECTION	X COORD (M)	Y COORD (M)	VERT ANGLE (DEG)	PIPE LENGTH (M)	SUPPORT REACTION (KN)	SEPARA -TION (M)	AXIAL TENSION (KN)	BENDING MOMENT (KN-M)	TENSILE STRAIN (PCT)	BENDING STRAIN (PCT)	TOTAL STRAIN (PCT)	PERCNT ALLOW (PCT)
1	LAYBARGE	96.31	6.41	1.69	0.00	0.655	0.000	0.00	0.00	0.0000	0.0000	0.0000	0.00
3	LAYBARGE	84.28	6.05	1.70	12.04	1.244	0.000	-0.04	0.00	0.0000	0.0000	0.0000	0.00
5	LAYBARGE	73.45	5.73	1.89	22.87	1.315	0.000	-0.08	0.00	0.0000	0.0000	0.0000	0.00
7	TENSIONR	60.11	5.24	2.31	36.23	1.442	0.000	54.97	0.00	0.0000	0.0000	0.0000	0.00
9	LAYBARGE	51.10	4.85	2.15	45.24	0.000	0.000	54.93	0.00	0.0000	0.0000	0.0000	0.00
10	LAYBARGE	46.45	4.70	1.97	49.89	1.077	0.000	54.91	0.00	0.0000	0.0000	0.0000	0.00
12	LAYBARGE	38.36	4.40	1.85	57.99	0.000	0.000	54.88	0.00	0.0000	0.0000	0.0000	0.00
13	LAYBARGE	35.36	4.31	1.25	60.99	0.102	0.000	54.88	0.00	0.0000	0.0000	0.0000	0.00
15	LAYBARGE	26.34	4.16	0.62	70.02	0.000	0.000	54.86	0.00	0.0000	0.0000	0.0000	0.00
16	LAYBARGE	23.35	4.15	-0.13	73.00	0.000	0.525	54.86	0.00	0.0000	0.0000	0.0000	0.00
18	LAYBARGE	11.84	4.26	-0.95	84.51	0.000	0.000	54.87	0.00	0.0000	0.0000	0.0000	0.00
19	LAYBARGE	8.87	4.33	3.41	87.48	9.515	0.000	54.67	0.00	0.0000	0.0000	0.0000	0.00
21	LAYBARGE	4.83	3.75	8.01	91.57	0.000	0.000	54.82	0.00	0.0000	0.0000	0.0000	0.00
22	LAYBARGE	2.71	3.46	7.49	93.71	0.000	2.863	54.79	0.00	0.0000	0.0000	0.0000	0.00
24	LAYBARGE	-7.34	2.20	6.84	103.84	0.000	0.000	54.65	0.00	0.0000	0.0000	0.0000	0.00
27	STINGER	-7.73	2.15	6.28	104.23	0.000	2.429	54.65	0.00	0.0000	0.0000	0.0000	0.00
29	STINGER	-16.70	1.21	5.48	113.25	0.000	1.191	54.54	0.00	0.0000	0.0000	0.0000	0.00
32	STINGER	-26.47	0.36	4.37	123.05	0.000	0.356	54.45	0.00	0.0000	0.0000	0.0000	0.00
34	STINGER	-37.37	-0.36	7.19	133.98	7.121	0.000	54.25	0.00	0.0000	0.0000	0.0000	0.00
36	STINGER	-40.35	-0.92	16.69	137.02	12.076	0.000	53.97	0.00	0.0000	0.0000	0.0000	0.00
38	SAGBEND	-48.06	-4.16	22.48	145.39	0.000	0.000	54.02	0.00	0.0000	0.0000	0.0000	0.00
39	SAGBEND	-53.67	-6.44	21.86	151.44	0.000	0.000	53.80	0.00	0.0000	0.0000	0.0000	0.00
40	SAGBEND	-59.29	-8.67	21.29	157.49	0.000	0.000	53.59	0.00	0.0000	0.0000	0.0000	0.00
41	SAGBEND	-64.94	-10.83	20.72	163.54	0.000	0.000	53.39	0.00	0.0000	0.0000	0.0000	0.00
42	SAGBEND	-70.61	-12.95	20.14	169.59	0.000	0.000	53.19	0.00	0.0000	0.0000	0.0000	0.00
43	SAGBEND	-76.30	-15.00	19.56	175.64	0.000	0.000	52.99	0.00	0.0000	0.0000	0.0000	0.00
44	SAGBEND	-82.01	-17.00	18.98	181.69	0.000	0.000	52.80	0.00	0.0000	0.0000	0.0000	0.00
45	SAGBEND	-87.74	-18.94	18.39	187.74	0.000	0.000	52.62	0.00	0.0000	0.0000	0.0000	0.00
46	SAGBEND	-93.49	-20.82	17.80	193.79	0.000	0.000	52.44	0.00	0.0000	0.0000	0.0000	0.00
47	SAGBEND	-99.26	-22.63	17.20	199.84	0.000	0.000	52.27	0.00	0.0000	0.0000	0.0000	0.00
48	SAGBEND	-105.05	-24.39	16.60	205.89	0.000	0.000	52.10	0.00	0.0000	0.0000	0.0000	0.00
49	SAGBEND	-110.86	-26.09	15.99	211.94	0.000	0.000	51.94	0.00	0.0000	0.0000	0.0000	0.00
50	SAGBEND	-116.68	-27.73	15.39	217.99	0.000	0.000	51.79	0.00	0.0000	0.0000	0.0000	0.00
51	SAGBEND	-122.52	-29.30	14.77	224.04	0.000	0.000	51.64	0.00	0.0000	0.0000	0.0000	0.00
52	SAGBEND	-128.38	-30.81	14.16	230.09	0.000	0.000	51.50	0.00	0.0000	0.0000	0.0000	0.00
53	SAGBEND	-134.26	-32.26	13.54	236.14	0.000	0.000	51.36	0.00	0.0000	0.0000	0.0000	0.00
54	SAGBEND	-140.15	-33.64	12.92	242.19	0.000	0.000	51.23	0.00	0.0000	0.0000	0.0000	0.00
55	SAGBEND	-146.05	-34.96	12.29	248.24	0.000	0.000	51.10	0.00	0.0000	0.0000	0.0000	0.00
56	SAGBEND	-151.97	-36.22	11.66	254.29	0.000	0.000	50.99	0.00	0.0000	0.0000	0.0000	0.00
57	SAGBEND	-157.90	-37.41	11.03	260.34	0.000	0.000	50.87	0.00	0.0000	0.0000	0.0000	0.00
58	SAGBEND	-163.84	-38.54	10.40	266.39	0.000	0.000	50.77	0.00	0.0000	0.0000	0.0000	0.00
59	SAGBEND	-169.80	-39.59	9.76	272.44	0.000	0.000	50.67	0.00	0.0000	0.0000	0.0000	0.00
60	SAGBEND	-175.77	-40.59	9.12	278.49	0.000	0.000	50.57	0.00	0.0000	0.0000	0.0000	0.00

S T A T I C P I P E C O O R D I N A T E S, F O R C E S A N D S T R A I N S

NODE NO.	PIPE SECTION	X COORD (M)	Y COORD (M)	VERT ANGLE (DEG)	PIPE LENGTH (M)	SUPPORT REACTION (KN)	SEPARA -TION (M)	AXIAL TENSION (KN)	BENDING MOMENT (KN-M)	TENSILE STRAIN (PCT)	BENDING STRAIN (PCT)	TOTAL STRAIN (PCT)	PERCNT ALLOW (PCT)
61	SAGBEND	-181.75	-41.51	8.48	284.54	0.000	0.000	50.48	0.00	0.0000	0.0000	0.0000	0.00
62	SAGBEND	-187.17	-42.29	0.65	290.02	0.001	0.000	50.01	0.00	0.0012	0.0000	0.0030	0.00
63	SEABED	-193.79	-42.36	0.41	296.64	1.636	0.000	49.93	20.78	0.0012	0.0155	0.0179	0.00
64	SEABED	-199.84	-42.39	0.13	302.69	5.646	0.000	49.93	13.37	0.0012	0.0100	0.0124	0.00
65	SEABED	-205.89	-42.39	0.00	308.74	6.807	0.000	49.93	4.26	0.0012	0.0032	0.0058	0.00
66	SEABED	-211.94	-42.39	-0.02	314.79	6.598	0.000	49.93	0.04	0.0012	0.0000	0.0030	0.00
67	SEABED	-217.99	-42.39	-0.02	320.84	6.240	0.000	49.93	-0.81	0.0012	-0.0006	0.0035	0.00
68	SEABED	-224.04	-42.39	-0.01	326.89	6.057	0.000	49.93	-0.51	0.0012	-0.0004	0.0033	0.00
69	SEABED	-230.09	-42.39	0.00	332.94	6.014	0.000	49.93	-0.16	0.0012	-0.0001	0.0031	0.00
70	SEABED	-236.14	-42.39	0.00	338.99	6.022	0.000	49.93	0.00	0.0012	0.0000	0.0030	0.00
71	SEABED	-242.19	-42.39	0.00	345.04	6.036	0.000	49.93	0.03	0.0012	0.0000	0.0030	0.00
72	SEABED	-248.24	-42.39	0.00	351.09	6.043	0.000	49.93	0.02	0.0012	0.0000	0.0030	0.00
73	SEABED	-254.29	-42.39	0.00	357.14	6.045	0.000	49.93	0.01	0.0012	0.0000	0.0030	0.00
74	SEABED	-260.34	-42.39	0.00	363.19	6.045	0.000	49.93	0.00	0.0012	0.0000	0.0030	0.00
75	SEABED	-266.39	-42.39	0.00	369.24	6.044	0.000	49.93	0.00	0.0012	0.0000	0.0030	0.00
76	SEABED	-272.44	-42.39	0.00	375.29	6.044	0.000	49.93	0.00	0.0012	0.0000	0.0030	0.00
77	SEABED	-278.49	-42.39	0.00	381.34	6.044	0.000	49.93	0.00	0.0012	0.0000	0.0030	0.00
78	SEABED	-284.54	-42.39	0.00	387.39	6.044	0.000	49.93	0.00	0.0012	0.0000	0.0030	0.00
79	SEABED	-290.59	-42.39	0.00	393.44	6.044	0.000	49.93	0.00	0.0012	0.0000	0.0030	0.00
80	SEABED	-296.64	-42.39	0.00	399.49	6.044	0.000	49.93	0.00	0.0012	0.0000	0.0030	0.00
81	SEABED	-302.69	-42.39	0.00	405.54	6.044	0.000	49.93	0.00	0.0012	0.0000	0.0030	0.00
82	SEABED	-308.74	-42.39	0.00	411.60	6.044	0.000	49.93	0.00	0.0012	0.0000	0.0030	0.00
83	SEABED	-314.79	-42.39	0.00	417.64	0.000	0.000	49.93	0.00	0.0012	0.0000	0.0030	0.00

S T A T I C P I P E C O O R D I N A T E S, F O R C E S A N D S T R A I N S

NODE NO.	PIPE SECTION	X COORD	Y COORD	VERT ANGLE	PIPE LENGTH	SUPPORT REACTION	SEPARA -TION	AXIAL TENSION	BENDING MOMENT	TENSILE STRAIN	BENDING STRAIN	TOTAL STRAIN	PERCNT ALLOW

		(M)	(M)	(DEG)	(M)	(KN)	(M)	(KN)	(KN-M)	(PCT)	(PCT)	(PCT)	(PCT)
1	LAYBARGE	96.31	6.41	1.69	0.00	0.655	0.000	0.00	0.00	0.0000	0.0000	0.0000	0.00
3	LAYBARGE	84.28	6.05	1.70	12.04	1.244	0.000	-0.04	0.00	0.0000	0.0000	0.0000	0.00
5	LAYBARGE	73.45	5.73	1.89	22.87	1.315	0.000	-0.08	0.00	0.0000	0.0000	0.0000	0.00
7	TENSIONR	60.11	5.24	2.31	36.23	1.442	0.000	54.97	0.00	0.0000	0.0000	0.0000	0.00
9	LAYBARGE	51.10	4.85	2.15	45.24	0.000	0.000	54.93	0.00	0.0000	0.0000	0.0000	0.00
10	LAYBARGE	46.45	4.70	1.97	49.89	1.077	0.000	54.91	0.00	0.0000	0.0000	0.0000	0.00
12	LAYBARGE	38.36	4.40	1.85	57.99	0.000	0.000	54.88	0.00	0.0000	0.0000	0.0000	0.00
13	LAYBARGE	35.36	4.31	1.25	60.99	0.102	0.000	54.88	0.00	0.0000	0.0000	0.0000	0.00
15	LAYBARGE	26.34	4.16	0.62	70.02	0.000	0.000	54.86	0.00	0.0000	0.0000	0.0000	0.00
16	LAYBARGE	23.35	4.15	-0.13	73.00	0.000	0.525	54.86	0.00	0.0000	0.0000	0.0000	0.00
18	LAYBARGE	11.85	4.26	-0.95	84.51	0.000	0.000	54.87	0.00	0.0000	0.0000	0.0000	0.00
19	LAYBARGE	8.87	4.33	3.41	87.48	9.511	0.000	54.67	0.00	0.0000	0.0000	0.0000	0.00
21	LAYBARGE	4.83	3.75	8.00	91.57	0.000	0.000	54.82	0.00	0.0000	0.0000	0.0000	0.00
22	LAYBARGE	2.73	3.46	7.48	93.69	0.000	2.864	54.79	0.00	0.0000	0.0000	0.0000	0.00
24	LAYBARGE	-7.32	2.20	6.84	103.82	0.000	0.000	54.65	0.00	0.0000	0.0000	0.0000	0.00
27	STINGER	-7.72	2.15	6.28	104.22	0.000	2.431	54.65	0.00	0.0000	0.0000	0.0000	0.00
29	STINGER	-16.68	1.21	5.47	113.23	0.000	1.193	54.54	0.00	0.0000	0.0000	0.0000	0.00
32	STINGER	-26.45	0.37	4.37	123.04	0.000	0.358	54.45	0.00	0.0000	0.0000	0.0000	0.00
34	STINGER	-37.35	-0.36	7.14	133.96	7.041	0.000	54.25	0.00	0.0000	0.0000	0.0000	0.00
36	STINGER	-40.32	-0.91	16.43	136.99	11.745	0.000	53.99	0.00	0.0000	0.0000	0.0000	0.00
38	SAGBEND	-48.09	-4.10	22.03	145.39	0.000	0.000	54.02	0.00	0.0000	0.0000	0.0000	0.00
39	SAGBEND	-53.71	-6.34	21.42	151.44	0.000	0.000	53.81	0.00	0.0000	0.0000	0.0000	0.00
40	SAGBEND	-59.35	-8.52	20.85	157.49	0.000	0.000	53.60	0.00	0.0000	0.0000	0.0000	0.00
41	SAGBEND	-65.01	-10.64	20.27	163.54	0.000	0.000	53.40	0.00	0.0000	0.0000	0.0000	0.00
42	SAGBEND	-70.70	-12.71	19.69	169.59	0.000	0.000	53.21	0.00	0.0000	0.0000	0.0000	0.00
43	SAGBEND	-76.41	-14.72	19.11	175.64	0.000	0.000	53.02	0.00	0.0000	0.0000	0.0000	0.00
44	SAGBEND	-82.13	-16.67	18.53	181.69	0.000	0.000	52.83	0.00	0.0000	0.0000	0.0000	0.00
45	SAGBEND	-87.88	-18.57	17.94	187.74	0.000	0.000	52.65	0.00	0.0000	0.0000	0.0000	0.00
46	SAGBEND	-93.65	-20.40	17.34	193.79	0.000	0.000	52.48	0.00	0.0000	0.0000	0.0000	0.00
47	SAGBEND	-99.43	-22.17	16.74	199.84	0.000	0.000	52.31	0.00	0.0000	0.0000	0.0000	0.00
48	SAGBEND	-105.23	-23.88	16.14	205.89	0.000	0.000	52.15	0.00	0.0000	0.0000	0.0000	0.00
49	SAGBEND	-111.05	-25.54	15.54	211.94	0.000	0.000	52.00	0.00	0.0000	0.0000	0.0000	0.00
50	SAGBEND	-116.89	-27.12	14.93	217.99	0.000	0.000	51.85	0.00	0.0000	0.0000	0.0000	0.00
51	SAGBEND	-122.74	-28.65	14.31	224.04	0.000	0.000	51.70	0.00	0.0000	0.0000	0.0000	0.00
52	SAGBEND	-128.61	-30.12	13.70	230.09	0.000	0.000	51.56	0.00	0.0000	0.0000	0.0000	0.00
53	SAGBEND	-134.50	-31.52	13.08	236.14	0.000	0.000	51.43	0.00	0.0000	0.0000	0.0000	0.00
54	SAGBEND	-140.40	-32.85	12.46	242.19	0.000	0.000	51.30	0.00	0.0000	0.0000	0.0000	0.00
55	SAGBEND	-146.31	-34.13	11.83	248.24	0.000	0.000	51.18	0.00	0.0000	0.0000	0.0000	0.00
56	SAGBEND	-152.24	-35.33	11.20	254.29	0.000	0.000	51.07	0.00	0.0000	0.0000	0.0000	0.00
57	SAGBEND	-158.18	-36.48	10.57	260.34	0.000	0.000	50.96	0.00	0.0000	0.0000	0.0000	0.00
58	SAGBEND	-164.14	-37.55	9.94	266.39	0.000	0.000	50.86	0.00	0.0000	0.0000	0.0000	0.00
59	SAGBEND	-170.10	-38.56	9.30	272.44	0.000	0.000	50.76	0.00	0.0000	0.0000	0.0000	0.00
60	SAGBEND	-176.08	-39.51	8.66	278.49	0.000	0.000	50.67	0.00	0.0000	0.0000	0.0000	0.00

OFFPIPE-3 OFFSHORE PIPELINE ANALYSIS SYSTEM - VERSION NO. - 3.02EX DATE - 2/15/2019 TIME - 15:33:24 PAGE 235
PROJECT - 10" PL LAYDOWN STRAIN AT BG PLATFORM JOB NO. - FINAL PROJECT
USER ID - MZR LICENSED BY - PT Timas Suplindo CASE 22

S T A T I C P I P E C O O R D I N A T E S, F O R C E S A N D S T R A I N S

NODE NO.	PIPE SECTION	X COORD (M)	Y COORD (M)	VERT ANGLE (DEG)	PIPE LENGTH (M)	SUPPORT REACTION (KN)	SEPARA -TION (M)	AXIAL TENSION (KN)	BENDING MOMENT (KN-M)	TENSILE STRAIN (PCT)	BENDING STRAIN (PCT)	TOTAL STRAIN (PCT)	PERCNT ALLOW (PCT)
61	SAGBEND	-182.06	-40.39	8.02	284.54	0.000	0.000	50.59	0.00	0.0000	0.0000	0.0000	0.00
62	SAGBEND	-188.06	-41.20	7.38	290.59	0.000	0.000	50.51	0.00	0.0000	0.0000	0.0000	0.00
63	SAGBEND	-194.06	-41.94	6.74	296.64	0.000	0.000	50.44	0.00	0.0000	0.0000	0.0000	0.00
64	SAGBEND	-197.42	-42.33	0.43	300.02	0.004	0.000	50.14	0.00	0.0012	0.0000	0.0030	0.00
65	SEABED	-201.78	-42.36	0.34	304.38	1.002	0.000	50.10	13.43	0.0012	0.0100	0.0125	0.00
66	SEABED	-206.14	-42.38	0.19	308.74	4.054	0.000	50.09	12.90	0.0012	0.0096	0.0121	0.00
67	SEABED	-212.19	-42.39	0.04	314.79	6.334	0.000	50.10	6.01	0.0012	0.0045	0.0070	0.00
68	SEABED	-218.24	-42.39	-0.01	320.84	6.551	0.000	50.10	1.22	0.0012	0.0009	0.0037	0.00
69	SEABED	-224.29	-42.39	-0.02	326.89	6.303	0.000	50.10	-0.42	0.0012	-0.0003	0.0032	0.00
70	SEABED	-230.34	-42.39	-0.01	332.94	6.106	0.000	50.10	-0.50	0.0012	-0.0004	0.0033	0.00
71	SEABED	-236.39	-42.39	0.00	338.99	6.032	0.000	50.10	-0.23	0.0012	-0.0002	0.0031	0.00
72	SEABED	-242.44	-42.39	0.00	345.04	6.024	0.000	50.10	-0.05	0.0012	0.0000	0.0030	0.00
73	SEABED	-248.49	-42.39	0.00	351.09	6.034	0.000	50.10	0.02	0.0012	0.0000	0.0030	0.00
74	SEABED	-254.54	-42.39	0.00	357.14	6.041	0.000	50.10	0.02	0.0012	0.0000	0.0030	0.00
75	SEABED	-260.59	-42.39	0.00	363.19	6.044	0.000	50.10	0.01	0.0012	0.0000	0.0030	0.00
76	SEABED	-266.64	-42.39	0.00	369.24	6.045	0.000	50.10	0.00	0.0012	0.0000	0.0030	0.00
77	SEABED	-272.69	-42.39	0.00	375.29	6.044	0.000	50.10	0.00	0.0012	0.0000	0.0030	0.00
78	SEABED	-278.74	-42.39	0.00	381.34	6.044	0.000	50.10	0.00	0.0012	0.0000	0.0030	0.00
79	SEABED	-284.79	-42.39	0.00	387.39	6.044	0.000	50.10	0.00	0.0012	0.0000	0.0030	0.00
80	SEABED	-290.84	-42.39	0.00	393.44	6.044	0.000	50.10	0.00	0.0012	0.0000	0.0030	0.00
81	SEABED	-296.89	-42.39	0.00	399.49	6.044	0.000	50.10	0.00	0.0012	0.0000	0.0030	0.00
82	SEABED	-302.94	-42.39	0.00	405.54	6.044	0.000	50.10	0.00	0.0012	0.0000	0.0030	0.00
83	SEABED	-308.99	-42.39	0.00	411.59	6.044	0.000	50.10	0.00	0.0012	0.0000	0.0030	0.00
84	SEABED	-315.04	-42.39	0.00	417.64	0.000	0.000	50.10	0.00	0.0012	0.0000	0.0030	0.00

LAYDOWN STRESS

OFFPIPE-3 OFFSHORE PIPELINE ANALYSIS SYSTEM - VERSION NO. - 3.02EX DATE - 2/15/2019 TIME - 15:33:46 PAGE 84
PROJECT - 10" PL LAYDOWN STRESS AT BG PLATFORM JOB NO. - FINAL PROJECT
USER ID - MZR LICENSED BY - PT Timas Suplindo CASE 1

S T A T I C P I P E C O O R D I N A T E S, F O R C E S A N D S T R E S S E S

NODE NO.	PIPE SECTION	X COORD (M)	Y COORD (M)	VERT ANGLE (DEG)	PIPE LENGTH (M)	SUPPORT REACTION (KN)	SEPARA -TION (M)	AXIAL TENSION (KN)	BENDING MOMENT (KN-M)	TENSILE STRESS (MPA)	BENDING STRESS (MPA)	TOTAL STRESS (MPA)	PERCNT YIELD (PCT)
1	LAYBARGE	96.31	6.41	1.69	0.00	0.655	0.000	0.00	0.00	0.00	0.00	0.00	0.00
3	LAYBARGE	84.28	6.05	1.70	12.04	1.244	0.000	-0.04	0.00	0.00	0.00	0.00	0.00
5	LAYBARGE	73.45	5.73	1.89	22.87	1.315	0.000	-0.08	0.00	0.00	0.00	0.00	0.00
7	TENSIONR	60.11	5.24	2.15	36.23	1.628	0.000	289.57	0.00	0.00	0.00	0.00	0.00
9	LAYBARGE	51.10	4.89	2.16	45.24	0.000	0.000	289.54	0.00	0.00	0.00	0.00	0.00
10	LAYBARGE	46.45	4.72	2.02	49.89	0.000	0.022	289.52	0.00	0.00	0.00	0.00	0.00
12	LAYBARGE	38.36	4.45	2.54	57.99	0.000	0.000	289.47	0.00	27.87	0.00	27.87	7.74
13	LAYBARGE	35.36	4.31	2.60	60.99	10.475	0.000	289.19	-11.77	27.85	-18.22	46.06	12.80
15	LAYBARGE	26.34	3.85	3.71	70.02	0.000	0.000	287.98	-111.87	27.73	-173.19	200.92	55.81
16	LAYBARGE	23.33	3.62	4.88	73.04	62.336	0.000	286.93	-181.15	27.63	-280.45	308.08	85.58
18	LAYBARGE	11.90	2.24	8.56	84.56	0.000	0.000	284.66	-130.08	27.41	-201.38	228.79	63.55
19	LAYBARGE	8.89	1.76	9.79	87.60	58.332	0.000	283.26	-174.05	27.27	-269.46	296.73	82.43
21	LAYBARGE	6.12	1.25	10.87	90.42	0.000	0.000	282.75	-114.98	27.23	-178.01	205.24	57.01
22	LAYBARGE	3.11	0.65	11.56	93.49	0.000	0.031	281.75	-64.25	27.13	-99.46	126.59	35.16
24	LAYBARGE	-6.83	-1.47	12.46	103.66	0.000	0.000	279.04	-34.15	26.78	-52.87	79.73	22.15
27	STINGER	-7.59	-1.64	12.53	104.43	0.000	0.069	278.86	-38.76	26.76	-60.01	86.85	24.13
29	STINGER	-16.48	-3.75	14.69	113.57	43.246	0.000	276.10	-174.96	26.37	-270.86	297.43	82.62
32	STINGER	-25.98	-6.56	18.10	123.48	16.499	0.000	273.57	-135.65	25.97	-210.01	236.33	65.65
34	STINGER	-36.26	-10.29	22.07	134.41	51.424	0.000	269.36	-199.62	25.35	-309.05	334.96	93.04
36	STINGER	-39.04	-11.46	23.30	137.43	0.000	0.304	268.76	-122.35	25.23	-189.42	215.27	59.80
38	SAGBEND	-44.97	-14.10	24.40	143.92	0.000	0.000	266.45	-21.01	24.86	-32.53	58.16	16.16
39	SAGBEND	-50.48	-16.60	24.31	149.97	0.000	0.000	263.94	26.85	24.47	41.56	66.95	18.60
40	SAGBEND	-56.00	-19.06	23.68	156.02	0.000	0.000	261.44	52.17	24.09	80.76	105.90	29.42
41	SAGBEND	-61.56	-21.45	22.75	162.07	0.000	0.000	259.02	65.92	23.73	102.05	126.95	35.26
42	SAGBEND	-67.16	-23.73	21.66	168.12	0.000	0.000	256.71	73.70	23.37	114.10	138.78	38.55
43	SAGBEND	-72.81	-25.91	20.48	174.17	0.000	0.000	254.52	78.38	23.04	121.35	145.81	40.50
44	SAGBEND	-78.50	-27.97	19.24	180.22	0.000	0.000	252.46	81.43	22.72	126.07	150.33	41.76
45	SAGBEND	-84.23	-29.90	17.96	186.27	0.000	0.000	250.52	83.60	22.43	129.43	153.50	42.64
46	SAGBEND	-90.01	-31.69	16.65	192.32	0.000	0.000	248.72	85.28	22.15	132.02	155.92	43.31
47	SAGBEND	-95.82	-33.36	15.32	198.37	0.000	0.000	247.05	86.65	21.90	134.15	157.88	43.86
48	SAGBEND	-101.68	-34.89	13.96	204.42	0.000	0.000	245.51	87.82	21.66	135.95	159.54	44.32
49	SAGBEND	-107.57	-36.28	12.59	210.47	0.000	0.000	244.12	88.81	21.45	137.49	160.93	44.70
50	SAGBEND	-113.49	-37.53	11.21	216.52	0.000	0.000	242.87	89.62	21.26	138.74	162.06	45.02
51	SAGBEND	-119.43	-38.63	9.81	222.57	0.000	0.000	241.77	90.20	21.09	139.65	162.87	45.24
52	SAGBEND	-125.41	-39.59	8.41	228.62	0.000	0.000	240.81	90.47	20.94	140.07	163.19	45.33
53	SAGBEND	-131.40	-40.40	7.01	234.67	0.000	0.000	240.00	90.24	20.82	139.71	162.75	45.21
54	SAGBEND	-137.42	-41.07	5.62	240.72	0.000	0.000	239.34	89.17	20.72	138.05	161.03	44.73
55	SAGBEND	-143.44	-41.59	4.25	246.77	0.000	0.000	238.83	86.62	20.64	134.10	157.03	43.62
56	SAGBEND	-149.48	-41.97	2.94	252.82	0.000	0.000	238.47	81.41	20.58	126.03	148.93	41.37
57	SAGBEND	-155.53	-42.21	1.75	258.87	0.000	0.000	238.26	71.32	20.55	110.42	133.30	37.03
58	SAGBEND	-161.57	-42.34	0.78	264.92	1.080	0.000	238.18	52.24	20.53	80.88	103.77	28.83
59	SEABED	-167.62	-42.39	0.19	270.97	6.218	0.000	238.20	23.88	20.53	36.96	59.92	16.64

OFFPIPE-3 OFFSHORE PIPELINE ANALYSIS SYSTEM - VERSION NO. - 3.02EX DATE - 2/15/2019 TIME - 15:33:46 PAGE 85
PROJECT - 10" PL LAYDOWN STRESS AT BG PLATFORM JOB NO. - FINAL PROJECT
USER ID - MZR LICENSED BY - PT Timas Suplindo CASE 1

S T A T I C P I P E C O O R D I N A T E S, F O R C E S A N D S T R E S S E S

NODE NO.	PIPE SECTION	X COORD (M)	Y COORD (M)	VERT ANGLE (DEG)	PIPE LENGTH (M)	SUPPORT REACTION (KN)	SEPARA -TION (M)	AXIAL TENSION (KN)	BENDING MOMENT (KN-M)	TENSILE STRESS (MPA)	BENDING STRESS (MPA)	TOTAL STRESS (MPA)	PERCNT YIELD (PCT)
60	SEABED	-173.67	-42.40	-0.02	277.02	7.616	0.000	238.22	5.60	20.54	8.66	31.74	8.82
61	SEABED	-179.72	-42.39	-0.05	283.07	6.996	0.000	238.22	-0.77	20.54	-1.19	24.34	6.76
62	SEABED	-185.77	-42.39	-0.03	289.12	6.358	0.000	238.22	-1.48	20.54	-2.29	25.43	7.06
63	SEABED	-191.82	-42.39	-0.01	295.17	6.070	0.000	238.22	-0.79	20.54	-1.22	24.37	6.77
64	SEABED	-197.87	-42.39	0.00	301.22	6.004	0.000	238.22	-0.23	20.54	-0.35	23.52	6.53
65	SEABED	-203.92	-42.39	0.00	307.27	6.014	0.000	238.22	0.00	20.54	0.00	23.17	6.44
66	SEABED	-209.97	-42.39	0.00	313.32	6.032	0.000	238.22	0.04	20.54	0.06	23.23	6.45
67	SEABED	-216.02	-42.39	0.00	319.37	6.041	0.000	238.22	0.03	20.54	0.04	23.21	6.45
68	SEABED	-222.07	-42.39	0.00	325.42	6.044	0.000	238.22	0.01	20.54	0.01	23.18	6.44

69	SEABED	-228.12	-42.39	0.00	331.47	6.044	0.000	238.22	0.00	20.54	0.00	23.17	6.44
70	SEABED	-234.17	-42.39	0.00	337.52	6.044	0.000	238.22	0.00	20.54	0.00	23.17	6.44
71	SEABED	-240.22	-42.39	0.00	343.57	6.043	0.000	238.22	0.00	20.54	0.00	23.17	6.44
72	SEABED	-246.27	-42.39	0.00	349.62	6.043	0.000	238.22	0.00	20.54	0.00	23.17	6.44
73	SEABED	-252.32	-42.39	0.00	355.67	0.000	0.000	238.22	0.00	20.54	0.00	23.17	6.44

S T A T I C P I P E C O O R D I N A T E S, F O R C E S A N D S T R E S S E S

NODE NO.	PIPE SECTION	X COORD (M)	Y COORD (M)	VERT ANGLE (DEG)	PIPE LENGTH (M)	SUPPORT REACTION (KN)	SEPARA -TION (M)	AXIAL TENSION (KN)	BENDING MOMENT (KN-M)	TENSILE STRESS (MPA)	BENDING STRESS (MPA)	TOTAL STRESS (MPA)	PERCNT YIELD (PCT)
1	LAYBARGE	96.31	6.41	1.69	0.00	0.655	0.000	0.00	0.00	0.00	0.00	0.00	0.00
3	LAYBARGE	84.28	6.05	1.70	12.04	1.244	0.000	-0.04	0.00	0.00	0.00	0.00	0.00
5	LAYBARGE	73.45	5.73	1.89	22.87	1.315	0.000	-0.08	0.00	0.00	0.00	0.00	0.00
7	TENSIONR	60.11	5.24	2.20	36.23	1.849	0.000	289.57	0.00	0.00	0.00	0.00	0.00
9	LAYBARGE	51.10	4.88	2.25	45.24	0.000	0.000	289.53	0.00	0.00	0.00	0.00	0.00
10	LAYBARGE	46.45	4.70	2.11	49.89	0.000	0.002	289.52	0.00	0.00	0.00	0.00	0.00
12	LAYBARGE	38.36	4.42	1.98	57.99	0.000	0.000	289.48	0.00	0.00	0.00	0.00	0.00
13	LAYBARGE	35.36	4.31	2.15	60.99	2.987	0.000	289.47	0.00	0.00	0.00	0.00	0.00
15	LAYBARGE	26.34	3.94	5.94	70.02	0.000	0.000	288.84	0.00	27.81	0.00	27.81	7.73
16	LAYBARGE	23.34	3.62	6.19	73.04	36.083	0.000	288.11	-56.14	27.74	-86.91	114.65	31.85
18	LAYBARGE	11.91	2.22	8.10	84.56	0.000	0.000	285.04	-126.12	27.45	-195.25	222.70	61.86
19	LAYBARGE	8.89	1.76	9.40	87.60	69.563	0.000	283.46	-192.65	27.29	-298.25	325.54	90.43
21	LAYBARGE	6.12	1.27	10.62	90.43	0.000	0.000	283.10	-130.42	27.26	-201.90	229.16	63.66
22	LAYBARGE	3.10	0.68	11.40	93.50	0.000	0.058	282.17	-74.65	27.17	-115.58	142.75	39.65
24	LAYBARGE	-6.84	-1.44	12.44	103.66	0.000	0.000	279.47	-35.44	26.83	-54.87	81.77	22.72
27	STINGER	-7.60	-1.60	12.51	104.44	0.000	0.091	279.30	-39.63	26.80	-61.36	88.25	24.51
29	STINGER	-16.50	-3.71	14.63	113.58	41.270	0.000	276.58	-170.24	26.42	-263.55	290.17	80.60
32	STINGER	-25.99	-6.51	18.07	123.48	18.849	0.000	273.98	-142.48	26.01	-220.58	246.94	68.60
34	STINGER	-36.27	-10.24	22.10	134.41	50.673	0.000	269.83	-198.48	25.40	-307.28	333.24	92.57
36	STINGER	-39.05	-11.40	23.33	137.43	0.000	0.304	269.22	-121.51	25.28	-188.12	214.01	59.45
38	SAGBEND	-44.97	-14.04	24.41	143.92	0.000	0.000	266.90	-20.63	24.90	-31.94	57.62	16.01
39	SAGBEND	-50.48	-16.55	24.32	149.97	0.000	0.000	264.39	27.00	24.52	41.80	67.24	18.68
40	SAGBEND	-56.01	-19.01	23.69	156.02	0.000	0.000	261.89	52.19	24.14	80.80	105.98	29.44
41	SAGBEND	-61.57	-21.40	22.76	162.07	0.000	0.000	259.47	65.87	23.77	101.97	126.92	35.25
42	SAGBEND	-67.17	-23.69	21.67	168.12	0.000	0.000	257.16	73.61	23.42	113.96	138.67	38.52
43	SAGBEND	-72.81	-25.86	20.49	174.17	0.000	0.000	254.97	78.26	23.08	121.17	145.67	40.46
44	SAGBEND	-78.50	-27.92	19.25	180.22	0.000	0.000	252.90	81.30	22.77	125.86	150.16	41.71
45	SAGBEND	-84.24	-29.85	17.98	186.27	0.000	0.000	250.96	83.46	22.47	129.20	153.31	42.59
46	SAGBEND	-90.01	-31.65	16.67	192.32	0.000	0.000	249.16	85.12	22.20	131.78	155.72	43.26
47	SAGBEND	-95.83	-33.32	15.34	198.37	0.000	0.000	247.49	86.49	21.94	133.90	157.68	43.80
48	SAGBEND	-101.68	-34.85	13.99	204.42	0.000	0.000	245.95	87.66	21.71	135.70	159.33	44.26
49	SAGBEND	-107.57	-36.25	12.62	210.47	0.000	0.000	244.56	88.64	21.49	137.24	160.72	44.65
50	SAGBEND	-113.49	-37.50	11.24	216.52	0.000	0.000	243.31	89.46	21.30	138.49	161.86	44.96
51	SAGBEND	-119.43	-38.60	9.85	222.57	0.000	0.000	242.20	90.05	21.13	139.41	162.67	45.19
52	SAGBEND	-125.41	-39.56	8.45	228.62	0.000	0.000	241.24	90.33	20.99	139.84	163.01	45.28
53	SAGBEND	-131.40	-40.38	7.05	234.67	0.000	0.000	240.42	90.12	20.86	139.52	162.61	45.17
54	SAGBEND	-137.41	-41.05	5.65	240.72	0.000	0.000	239.76	89.08	20.76	137.92	160.94	44.71
55	SAGBEND	-143.44	-41.57	4.29	246.77	0.000	0.000	239.24	86.60	20.68	134.08	157.05	43.63
56	SAGBEND	-149.48	-41.96	2.98	252.82	0.000	0.000	238.88	81.52	20.62	126.20	149.15	41.43
57	SAGBEND	-155.52	-42.21	1.79	258.87	0.000	0.000	238.67	71.66	20.59	110.95	133.87	37.19
58	SAGBEND	-161.57	-42.34	0.80	264.92	0.961	0.000	238.58	53.00	20.57	82.05	104.99	29.16
59	SEABED	-167.62	-42.39	0.20	270.97	6.088	0.000	238.60	24.68	20.57	38.21	61.20	17.00

S T A T I C P I P E C O O R D I N A T E S, F O R C E S A N D S T R E S S E S

NODE NO.	PIPE SECTION	X COORD (M)	Y COORD (M)	VERT ANGLE (DEG)	PIPE LENGTH (M)	SUPPORT REACTION (KN)	SEPARA -TION (M)	AXIAL TENSION (KN)	BENDING MOMENT (KN-M)	TENSILE STRESS (MPA)	BENDING STRESS (MPA)	TOTAL STRESS (MPA)	PERCNT YIELD (PCT)
60	SEABED	-173.67	-42.40	-0.02	277.02	7.617	0.000	238.62	5.97	20.57	9.24	32.34	8.98
61	SEABED	-179.72	-42.39	-0.05	283.07	7.019	0.000	238.62	-0.68	20.57	-1.05	24.24	6.73
62	SEABED	-185.77	-42.39	-0.03	289.12	6.373	0.000	238.62	-1.49	20.57	-2.31	25.48	7.08
63	SEABED	-191.82	-42.39	-0.01	295.17	6.075	0.000	238.62	-0.81	20.57	-1.26	24.44	6.79
64	SEABED	-197.87	-42.39	0.00	301.22	6.004	0.000	238.62	-0.24	20.57	-0.37	23.57	6.55
65	SEABED	-203.92	-42.39	0.00	307.27	6.013	0.000	238.62	-0.01	20.57	-0.01	23.21	6.45
66	SEABED	-209.97	-42.39	0.00	313.32	6.031	0.000	238.62	0.04	20.57	0.06	23.27	6.46
67	SEABED	-216.02	-42.39	0.00	319.37	6.041	0.000	238.62	0.03	20.57	0.04	23.25	6.46
68	SEABED	-222.07	-42.39	0.00	325.42	6.044	0.000	238.62	0.01	20.57	0.01	23.22	6.45
69	SEABED	-228.12	-42.39	0.00	331.47	6.044	0.000	238.62	0.00	20.57	0.00	23.21	6.45
70	SEABED	-234.17	-42.39	0.00	337.52	6.044	0.000	238.62	0.00	20.57	0.00	23.21	6.45
71	SEABED	-240.22	-42.39	0.00	343.57	6.043	0.000	238.62	0.00	20.57	0.00	23.21	6.45
72	SEABED	-246.27	-42.39	0.00	349.62	6.043	0.000	238.62	0.00	20.57	0.00	23.21	6.45
73	SEABED	-252.32	-42.39	0.00	355.67	0.000	0.000	238.62	0.00	20.57	0.00	23.21	6.45

S T A T I C P I P E C O O R D I N A T E S, F O R C E S A N D S T R E S S E S

NODE NO.	PIPE SECTION	X COORD (M)	Y COORD (M)	VERT ANGLE (DEG)	PIPE LENGTH (M)	SUPPORT REACTION (KN)	SEPARA -TION (M)	AXIAL TENSION (KN)	BENDING MOMENT (KN-M)	TENSILE STRESS (MPA)	BENDING STRESS (MPA)	TOTAL STRESS (MPA)	PERCNT YIELD (PCT)
1	LAYBARGE	96.31	6.41	1.69	0.00	0.655	0.000	0.00	0.00	0.00	0.00	0.00	0.00
3	LAYBARGE	84.28	6.05	1.70	12.04	1.244	0.000	-0.04	0.00	0.00	0.00	0.00	0.00
5	LAYBARGE	73.45	5.73	1.89	22.87	1.315	0.000	-0.08	0.00	0.00	0.00	0.00	0.00
7	TENSIONR	60.11	5.24	2.20	36.23	1.850	0.000	289.57	0.00	0.00	0.00	0.00	0.00
9	LAYBARGE	51.10	4.88	2.25	45.24	0.000	0.000	289.54	0.00	0.00	0.00	0.00	0.00
10	LAYBARGE	46.45	4.70	2.11	49.89	0.000	0.001	289.52	0.00	0.00	0.00	0.00	0.00
12	LAYBARGE	38.36	4.42	1.98	57.99	0.000	0.000	289.48	0.00	0.00	0.00	0.00	0.00
13	LAYBARGE	35.36	4.31	2.62	60.99	7.759	0.000	289.45	0.00	0.00	0.00	0.00	0.00
15	LAYBARGE	26.35	3.79	3.26	70.02	0.000	0.000	289.42	0.00	0.00	0.00	0.00	0.00
16	LAYBARGE	23.33	3.62	4.86	73.04	17.585	0.000	289.28	0.00	0.00	0.00	0.00	0.00
18	LAYBARGE	11.91	2.32	10.40	84.54	0.000	0.000	288.57	0.00	27.79	0.00	27.79	7.72
19	LAYBARGE	8.90	1.76	10.67	87.60	37.432	0.000	287.33	-62.03	27.67	-96.02	123.69	34.36
21	LAYBARGE	6.13	1.23	11.12	90.43	0.000	0.000	286.31	-55.74	27.57	-86.29	113.86	31.63
22	LAYBARGE	3.12	0.62	11.57	93.49	17.873	0.000	285.08	-62.12	27.45	-96.17	123.62	34.34
24	LAYBARGE	-6.83	-1.50	12.44	103.66	0.000	0.000	282.39	-33.85	27.11	-52.41	79.59	22.11
27	STINGER	-7.58	-1.67	12.52	104.43	0.000	0.050	282.22	-39.01	27.08	-60.40	87.57	24.32
29	STINGER	-16.47	-3.78	14.71	113.57	44.584	0.000	279.44	-177.32	26.69	-274.52	301.42	83.73
32	STINGER	-25.97	-6.59	18.07	123.48	14.864	0.000	276.96	-129.53	26.29	-200.54	227.19	63.11
34	STINGER	-36.25	-10.30	21.95	134.42	51.960	0.000	272.74	-199.14	25.68	-308.29	334.53	92.92
36	STINGER	-39.04	-11.46	23.18	137.43	0.000	0.306	272.14	-121.85	25.55	-188.64	214.82	59.67
38	SAGBEND	-44.96	-14.08	24.27	143.91	0.000	0.000	269.85	-20.99	25.18	-32.49	58.45	16.24
39	SAGBEND	-50.47	-16.57	24.18	149.96	0.000	0.000	267.35	26.62	24.80	41.21	66.92	18.59
40	SAGBEND	-56.00	-19.02	23.55	156.01	0.000	0.000	264.86	51.69	24.43	80.02	105.49	29.30
41	SAGBEND	-61.57	-21.40	22.64	162.06	0.000	0.000	262.45	65.24	24.06	101.00	126.23	35.06
42	SAGBEND	-67.17	-23.67	21.56	168.11	0.000	0.000	260.16	72.87	23.71	112.82	137.83	38.28
43	SAGBEND	-72.82	-25.84	20.39	174.16	0.000	0.000	257.98	77.45	23.38	119.90	144.69	40.19
44	SAGBEND	-78.52	-27.89	19.17	180.21	0.000	0.000	255.92	80.41	23.06	124.49	149.08	41.41
45	SAGBEND	-84.25	-29.81	17.90	186.26	0.000	0.000	253.99	82.52	22.77	127.75	152.16	42.27
46	SAGBEND	-90.03	-31.61	16.61	192.31	0.000	0.000	252.19	84.14	22.49	130.27	154.50	42.92
47	SAGBEND	-95.85	-33.27	15.29	198.36	0.000	0.000	250.53	85.48	22.24	132.33	156.40	43.44
48	SAGBEND	-101.70	-34.80	13.96	204.41	0.000	0.000	249.00	86.61	22.00	134.09	158.01	43.89
49	SAGBEND	-107.59	-36.19	12.61	210.46	0.000	0.000	247.60	87.58	21.79	135.59	159.37	44.27
50	SAGBEND	-113.51	-37.44	11.24	216.51	0.000	0.000	246.35	88.38	21.60	136.83	160.49	44.58
51	SAGBEND	-119.45	-38.55	9.87	222.56	0.000	0.000	245.24	88.98	21.43	137.75	161.30	44.81
52	SAGBEND	-125.43	-39.51	8.48	228.61	0.000	0.000	244.28	89.28	21.28	138.22	161.68	44.91
53	SAGBEND	-131.42	-40.33	7.10	234.66	0.000	0.000	243.46	89.13	21.16	137.99	161.37	44.82
54	SAGBEND	-137.43	-41.01	5.72	240.71	0.000	0.000	242.79	88.22	21.05	136.57	159.89	44.41
55	SAGBEND	-143.46	-41.54	4.37	246.76	0.000	0.000	242.27	85.96	20.97	133.07	156.34	43.43
56	SAGBEND	-149.50	-41.93	3.07	252.81	0.000	0.000	241.89	81.27	20.92	125.82	149.05	41.40
57	SAGBEND	-155.54	-42.19	1.87	258.86	0.000	0.000	241.66	72.14	20.88	111.68	134.89	37.47
58	SAGBEND	-161.59	-42.33	0.87	264.91	0.667	0.000	241.57	54.75	20.86	84.76	107.98	29.99
59	SEABED	-167.64	-42.39	0.24	270.96	5.673	0.000	241.59	26.87	20.86	41.61	64.88	18.02

S T A T I C P I P E C O O R D I N A T E S, F O R C E S A N D S T R E S S E S

NODE NO.	PIPE SECTION	X COORD (M)	Y COORD (M)	VERT ANGLE (DEG)	PIPE LENGTH (M)	SUPPORT REACTION (KN)	SEPARA -TION (M)	AXIAL TENSION (KN)	BENDING MOMENT (KN-M)	TENSILE STRESS (MPA)	BENDING STRESS (MPA)	TOTAL STRESS (MPA)	PERCNT YIELD (PCT)
60	SEABED	-173.69	-42.40	-0.01	277.01	7.593	0.000	241.60	7.06	20.86	10.93	34.31	9.53
61	SEABED	-179.74	-42.39	-0.05	283.06	7.080	0.000	241.60	-0.38	20.86	-0.59	24.07	6.69
62	SEABED	-185.79	-42.39	-0.03	289.11	6.415	0.000	241.60	-1.50	20.86	-2.32	25.78	7.16
63	SEABED	-191.84	-42.39	-0.01	295.16	6.091	0.000	241.60	-0.87	20.86	-1.35	24.82	6.89
64	SEABED	-197.89	-42.39	0.00	301.21	6.007	0.000	241.60	-0.28	20.86	-0.43	23.91	6.64
65	SEABED	-203.94	-42.39	0.00	307.26	6.012	0.000	241.60	-0.02	20.86	-0.03	23.52	6.53
66	SEABED	-209.99	-42.39	0.00	313.31	6.030	0.000	241.60	0.04	20.86	0.06	23.55	6.54

67	SEABED	-216.04	-42.39	0.00	319.36	6.041	0.000	241.60	0.03	20.86	0.04	23.53	6.54
68	SEABED	-222.09	-42.39	0.00	325.41	6.044	0.000	241.60	0.01	20.86	0.02	23.50	6.53
69	SEABED	-228.14	-42.39	0.00	331.46	6.044	0.000	241.60	0.00	20.86	0.00	23.49	6.53
70	SEABED	-234.19	-42.39	0.00	337.51	6.044	0.000	241.60	0.00	20.86	0.00	23.49	6.53
71	SEABED	-240.24	-42.39	0.00	343.56	6.043	0.000	241.60	0.00	20.86	0.00	23.49	6.53
72	SEABED	-246.29	-42.39	0.00	349.61	6.043	0.000	241.60	0.00	20.86	0.00	23.49	6.52
73	SEABED	-252.34	-42.39	0.00	355.66	6.043	0.000	241.60	0.00	20.86	0.00	23.49	6.52
74	SEABED	-258.39	-42.39	0.00	361.71	0.000	0.000	241.60	0.00	20.86	0.00	23.49	6.52

S T A T I C P I P E C O O R D I N A T E S, F O R C E S A N D S T R E S S E S

NODE NO.	PIPE SECTION	X COORD (M)	Y COORD (M)	VERT ANGLE (DEG)	PIPE LENGTH (M)	SUPPORT REACTION (KN)	SEPARA -TION (M)	AXIAL TENSION (KN)	BENDING MOMENT (KN-M)	TENSILE STRESS (MPA)	BENDING STRESS (MPA)	TOTAL STRESS (MPA)	PERCNT YIELD (PCT)
1	LAYBARGE	96.31	6.41	1.69	0.00	0.655	0.000	0.00	0.00	0.00	0.00	0.00	0.00
3	LAYBARGE	84.28	6.05	1.70	12.04	1.244	0.000	-0.04	0.00	0.00	0.00	0.00	0.00
5	LAYBARGE	73.45	5.73	1.89	22.87	1.315	0.000	-0.08	0.00	0.00	0.00	0.00	0.00
7	TENSIONR	60.11	5.24	2.20	36.23	1.850	0.000	289.56	0.00	0.00	0.00	0.00	0.00
9	LAYBARGE	51.10	4.88	2.25	45.24	0.000	0.000	289.53	0.00	0.00	0.00	0.00	0.00
10	LAYBARGE	46.45	4.70	2.11	49.89	0.000	0.001	289.51	0.00	0.00	0.00	0.00	0.00
12	LAYBARGE	38.36	4.42	1.98	57.99	0.000	0.000	289.48	0.00	0.00	0.00	0.00	0.00
13	LAYBARGE	35.36	4.31	2.62	60.99	7.761	0.000	289.44	0.00	0.00	0.00	0.00	0.00
15	LAYBARGE	26.35	3.79	3.26	70.02	0.000	0.000	289.41	0.00	0.00	0.00	0.00	0.00
16	LAYBARGE	23.33	3.62	5.29	73.04	21.950	0.000	289.19	0.00	0.00	0.00	0.00	0.00
18	LAYBARGE	11.93	2.14	7.31	84.54	0.000	0.000	289.25	0.00	0.00	0.00	0.00	0.00
19	LAYBARGE	8.89	1.76	8.73	87.60	15.416	0.000	289.11	0.00	0.00	0.00	0.00	0.00
21	LAYBARGE	6.12	1.26	11.93	90.42	0.000	0.000	289.02	0.00	27.83	0.00	27.83	7.73
22	LAYBARGE	3.11	0.62	12.06	93.49	24.041	0.000	287.71	-36.77	27.70	-56.93	84.63	23.51
24	LAYBARGE	-6.82	-1.55	12.57	103.66	0.000	0.000	284.93	-27.55	27.35	-42.66	70.09	19.47
27	STINGER	-7.56	-1.72	12.63	104.42	0.000	0.025	284.76	-33.67	27.32	-52.12	79.53	22.09
29	STINGER	-16.46	-3.84	14.80	113.56	47.062	0.000	281.92	-180.99	26.93	-280.21	307.34	85.37
32	STINGER	-25.91	-6.65	18.08	123.43	11.868	0.000	279.53	-119.57	26.54	-185.11	212.01	58.89
34	STINGER	-36.20	-10.35	21.83	134.36	52.922	0.000	275.27	-199.46	25.92	-308.80	335.28	93.13
36	STINGER	-38.99	-11.51	23.06	137.38	0.000	0.308	274.67	-121.84	25.80	-188.62	215.04	59.73
38	SAGBEND	-44.96	-14.13	24.15	143.90	0.000	0.000	272.37	-20.51	25.43	-31.75	57.95	16.10
39	SAGBEND	-50.47	-16.61	24.06	149.95	0.000	0.000	269.89	26.69	25.05	41.32	67.28	18.69
40	SAGBEND	-56.01	-19.05	23.44	156.00	0.000	0.000	267.41	51.47	24.67	79.68	105.39	29.28
41	SAGBEND	-61.58	-21.41	22.53	162.05	0.000	0.000	265.02	64.82	24.30	100.35	125.82	34.95
42	SAGBEND	-67.19	-23.68	21.46	168.10	0.000	0.000	262.73	72.31	23.96	111.95	137.21	38.11
43	SAGBEND	-72.84	-25.84	20.30	174.15	0.000	0.000	260.56	76.79	23.62	118.88	143.92	39.98
44	SAGBEND	-78.54	-27.87	19.08	180.20	0.000	0.000	258.51	79.69	23.31	123.37	148.21	41.17
45	SAGBEND	-84.28	-29.79	17.83	186.25	0.000	0.000	256.59	81.74	23.02	126.55	151.20	42.00
46	SAGBEND	-90.06	-31.58	16.55	192.30	0.000	0.000	254.80	83.33	22.74	129.00	153.48	42.63
47	SAGBEND	-95.87	-33.24	15.25	198.35	0.000	0.000	253.14	84.63	22.49	131.02	155.34	43.15
48	SAGBEND	-101.73	-34.76	13.93	204.40	0.000	0.000	251.61	85.74	22.26	132.74	156.91	43.59
49	SAGBEND	-107.62	-36.15	12.59	210.45	0.000	0.000	250.23	86.69	22.05	134.21	158.24	43.96
50	SAGBEND	-113.54	-37.40	11.24	216.50	0.000	0.000	248.97	87.48	21.85	135.43	159.34	44.26
51	SAGBEND	-119.48	-38.50	9.88	222.55	0.000	0.000	247.87	88.07	21.68	136.35	160.16	44.49
52	SAGBEND	-125.46	-39.47	8.51	228.60	0.000	0.000	246.90	88.39	21.54	136.85	160.56	44.60
53	SAGBEND	-131.45	-40.29	7.14	234.65	0.000	0.000	246.08	88.29	21.41	136.68	160.31	44.53
54	SAGBEND	-137.46	-40.97	5.77	240.70	0.000	0.000	245.40	87.46	21.31	135.40	158.97	44.16
55	SAGBEND	-143.49	-41.51	4.43	246.75	0.000	0.000	244.87	85.37	21.23	132.16	155.68	43.24
56	SAGBEND	-149.52	-41.91	3.14	252.80	0.000	0.000	244.49	80.99	21.17	125.38	148.86	41.35
57	SAGBEND	-155.57	-42.18	1.94	258.85	0.000	0.000	244.25	72.39	21.13	112.07	135.54	37.65
58	SAGBEND	-161.62	-42.33	0.93	264.90	0.481	0.000	244.15	55.96	21.11	86.64	110.11	30.59
59	SEABED	-167.67	-42.38	0.27	270.95	5.313	0.000	244.16	28.62	21.11	44.30	67.82	18.84

S T A T I C P I P E C O O R D I N A T E S, F O R C E S A N D S T R E S S E S

NODE NO.	PIPE SECTION	X COORD (M)	Y COORD (M)	VERT ANGLE (DEG)	PIPE LENGTH (M)	SUPPORT REACTION (KN)	SEPARA -TION (M)	AXIAL TENSION (KN)	BENDING MOMENT (KN-M)	TENSILE STRESS (MPA)	BENDING STRESS (MPA)	TOTAL STRESS (MPA)	PERCNT YIELD (PCT)
60	SEABED	-173.72	-42.40	0.00	277.00	7.558	0.000	244.18	7.98	21.11	12.35	35.97	9.99
61	SEABED	-179.77	-42.39	-0.05	283.05	7.125	0.000	244.18	-0.11	21.11	-0.17	23.90	6.64
62	SEABED	-185.82	-42.39	-0.03	289.10	6.450	0.000	244.18	-1.49	21.11	-2.31	26.01	7.23
63	SEABED	-191.87	-42.39	-0.01	295.15	6.105	0.000	244.18	-0.91	21.11	-1.41	25.13	6.98
64	SEABED	-197.92	-42.39	0.00	301.20	6.009	0.000	244.18	-0.31	21.11	-0.47	24.20	6.72
65	SEABED	-203.97	-42.39	0.00	307.25	6.011	0.000	244.18	-0.03	21.11	-0.04	23.78	6.60
66	SEABED	-210.02	-42.39	0.00	313.30	6.029	0.000	244.18	0.04	21.11	0.06	23.79	6.61
67	SEABED	-216.07	-42.39	0.00	319.35	6.040	0.000	244.18	0.03	21.11	0.04	23.78	6.60
68	SEABED	-222.12	-42.39	0.00	325.40	6.044	0.000	244.18	0.01	21.11	0.02	23.75	6.60
69	SEABED	-228.17	-42.39	0.00	331.45	6.044	0.000	244.18	0.00	21.11	0.00	23.74	6.59
70	SEABED	-234.22	-42.39	0.00	337.50	6.044	0.000	244.18	0.00	21.11	0.00	23.73	6.59
71	SEABED	-240.27	-42.39	0.00	343.55	6.043	0.000	244.18	0.00	21.11	0.00	23.73	6.59
72	SEABED	-246.32	-42.39	0.00	349.60	6.043	0.000	244.18	0.00	21.11	0.00	23.73	6.59
73	SEABED	-252.37	-42.39	0.00	355.65	6.043	0.000	244.18	0.00	21.11	0.00	23.73	6.59
74	SEABED	-258.42	-42.39	0.00	361.70	0.000	0.000	244.18	0.00	21.11	0.00	23.73	6.59

S T A T I C P I P E C O O R D I N A T E S, F O R C E S A N D S T R E S S E S

NODE NO.	PIPE SECTION	X COORD (M)	Y COORD (M)	VERT ANGLE (DEG)	PIPE LENGTH (M)	SUPPORT REACTION (KN)	SEPARA -TION (M)	AXIAL TENSION (KN)	BENDING MOMENT (KN-M)	TENSILE STRESS (MPA)	BENDING STRESS (MPA)	TOTAL STRESS (MPA)	PERCNT YIELD (PCT)
1	LAYBARGE	96.31	6.41	1.69	0.00	0.655	0.000	0.00	0.00	0.00	0.00	0.00	0.00
3	LAYBARGE	84.28	6.05	1.70	12.04	1.244	0.000	-0.04	0.00	0.00	0.00	0.00	0.00
5	LAYBARGE	73.45	5.73	1.89	22.87	1.315	0.000	-0.08	0.00	0.00	0.00	0.00	0.00
7	TENSIONR	60.11	5.24	2.20	36.23	1.841	0.000	276.95	0.00	0.00	0.00	0.00	0.00
9	LAYBARGE	51.10	4.88	2.25	45.24	0.000	0.000	276.91	0.00	0.00	0.00	0.00	0.00
10	LAYBARGE	46.45	4.70	2.10	49.89	0.000	0.000	276.89	0.00	0.00	0.00	0.00	0.00
12	LAYBARGE	38.36	4.41	1.97	57.99	0.000	0.000	276.86	0.00	0.00	0.00	0.00	0.00
13	LAYBARGE	35.36	4.31	2.62	60.99	7.510	0.000	276.82	0.00	0.00	0.00	0.00	0.00
15	LAYBARGE	26.35	3.79	3.26	70.02	0.000	0.000	276.79	0.00	0.00	0.00	0.00	0.00
16	LAYBARGE	23.33	3.62	5.29	73.04	21.059	0.000	276.58	0.00	0.00	0.00	0.00	0.00
18	LAYBARGE	11.93	2.14	7.31	84.54	0.000	0.000	276.63	0.00	0.00	0.00	0.00	0.00
19	LAYBARGE	8.89	1.76	8.74	87.61	14.926	0.000	276.49	0.00	0.00	0.00	0.00	0.00
21	LAYBARGE	6.11	1.26	11.91	90.43	0.000	0.000	276.42	0.00	0.00	26.62	26.62	7.39
22	LAYBARGE	3.10	0.62	12.03	93.50	22.946	0.000	275.11	-34.93	26.49	-54.08	80.57	22.38
24	LAYBARGE	-6.83	-1.55	12.54	103.67	0.000	0.000	272.33	-29.22	26.13	-45.23	71.45	19.85
27	STINGER	-7.59	-1.72	12.61	104.44	0.000	0.029	272.15	-35.62	26.11	-55.15	81.35	22.60
29	STINGER	-16.48	-3.84	14.86	113.58	47.256	0.000	269.28	-185.98	25.71	-287.93	313.84	87.18
32	STINGER	-25.95	-6.68	18.27	123.48	11.809	0.000	266.87	-124.35	25.32	-192.52	218.20	60.61
34	STINGER	-36.22	-10.43	22.17	134.41	52.900	0.000	262.55	-204.02	24.69	-315.85	341.10	94.75
36	STINGER	-39.00	-11.60	23.43	137.43	0.000	0.304	261.96	-125.84	24.57	-194.81	220.01	61.11
38	SAGBEND	-44.91	-14.25	24.56	143.90	0.000	0.000	259.66	-22.86	24.19	-35.38	60.36	16.77
39	SAGBEND	-50.41	-16.76	24.49	149.95	0.000	0.000	257.14	26.40	23.81	40.88	65.61	18.22
40	SAGBEND	-55.93	-19.25	23.86	156.00	0.000	0.000	254.61	52.69	23.43	81.57	106.05	29.46
41	SAGBEND	-61.48	-21.65	22.92	162.05	0.000	0.000	252.17	67.09	23.05	103.86	128.10	35.58
42	SAGBEND	-67.08	-23.95	21.81	168.10	0.000	0.000	249.85	75.31	22.70	116.58	140.60	39.05
43	SAGBEND	-72.72	-26.14	20.60	174.15	0.000	0.000	247.64	80.28	22.36	124.29	148.08	41.13
44	SAGBEND	-78.40	-28.21	19.33	180.20	0.000	0.000	245.57	83.53	22.05	129.32	152.92	42.48
45	SAGBEND	-84.13	-30.14	18.01	186.25	0.000	0.000	243.62	85.85	21.75	132.91	156.31	43.42
46	SAGBEND	-89.91	-31.95	16.67	192.30	0.000	0.000	241.82	87.64	21.47	135.67	158.90	44.14
47	SAGBEND	-95.72	-33.61	15.30	198.35	0.000	0.000	240.15	89.09	21.22	137.93	160.99	44.72
48	SAGBEND	-101.58	-35.14	13.91	204.40	0.000	0.000	238.62	90.32	20.98	139.83	162.74	45.21
49	SAGBEND	-107.47	-36.52	12.50	210.45	0.000	0.000	237.23	91.34	20.77	141.41	164.20	45.61
50	SAGBEND	-113.39	-37.76	11.07	216.50	0.000	0.000	235.99	92.16	20.58	142.68	165.34	45.93
51	SAGBEND	-119.34	-38.84	9.64	222.55	0.000	0.000	234.91	92.71	20.42	143.53	166.09	46.14
52	SAGBEND	-125.32	-39.78	8.20	228.60	0.000	0.000	233.97	92.87	20.27	143.78	166.25	46.18
53	SAGBEND	-131.32	-40.57	6.76	234.65	0.000	0.000	233.18	92.42	20.15	143.08	165.47	45.96
54	SAGBEND	-137.33	-41.21	5.34	240.70	0.000	0.000	232.55	90.92	20.06	140.76	163.09	45.30
55	SAGBEND	-143.36	-41.70	3.95	246.75	0.000	0.000	232.08	87.60	19.98	135.62	157.91	43.86
56	SAGBEND	-149.40	-42.04	2.64	252.80	0.000	0.000	231.76	81.00	19.93	125.41	147.66	41.02
57	SAGBEND	-155.45	-42.26	1.47	258.85	0.004	0.000	231.58	68.45	19.90	105.97	128.22	35.62
58	SEABED	-161.50	-42.36	0.57	264.90	2.468	0.000	231.54	45.06	19.89	69.76	92.03	25.56
59	SEABED	-167.55	-42.39	0.10	270.95	7.121	0.000	231.57	17.40	19.90	26.93	49.28	13.69

S T A T I C P I P E C O O R D I N A T E S, F O R C E S A N D S T R E S S E S

NODE NO.	PIPE SECTION	X COORD (M)	Y COORD (M)	VERT ANGLE (DEG)	PIPE LENGTH (M)	SUPPORT REACTION (KN)	SEPARA -TION (M)	AXIAL TENSION (KN)	BENDING MOMENT (KN-M)	TENSILE STRESS (MPA)	BENDING STRESS (MPA)	TOTAL STRESS (MPA)	PERCNT YIELD (PCT)
60	SEABED	-173.60	-42.40	-0.04	277.00	7.553	0.000	231.58	2.80	19.90	4.33	26.81	7.45
61	SEABED	-179.65	-42.39	-0.04	283.05	6.794	0.000	231.58	-1.37	19.90	-2.12	24.63	6.84
62	SEABED	-185.70	-42.39	-0.02	289.10	6.242	0.000	231.58	-1.36	19.90	-2.10	24.61	6.84

63	SEABED	-191.75	-42.39	0.00	295.15	6.033	0.000	231.58	-0.60	19.90	-0.94	23.46	6.52
64	SEABED	-197.80	-42.39	0.00	301.20	6.001	0.000	231.58	-0.13	19.90	-0.21	22.74	6.32
65	SEABED	-203.85	-42.39	0.00	307.25	6.019	0.000	231.58	0.02	19.90	0.04	22.58	6.27
66	SEABED	-209.90	-42.39	0.00	313.30	6.035	0.000	231.58	0.04	19.90	0.06	22.60	6.28
67	SEABED	-215.95	-42.39	0.00	319.35	6.043	0.000	231.58	0.02	19.90	0.03	22.57	6.27
68	SEABED	-222.00	-42.39	0.00	325.40	6.044	0.000	231.58	0.01	19.90	0.01	22.55	6.26
69	SEABED	-228.05	-42.39	0.00	331.45	6.044	0.000	231.58	0.00	19.90	0.00	22.54	6.26
70	SEABED	-234.10	-42.39	0.00	337.50	6.044	0.000	231.58	0.00	19.90	0.00	22.54	6.26
71	SEABED	-240.15	-42.39	0.00	343.55	6.043	0.000	231.58	0.00	19.90	0.00	22.54	6.26
72	SEABED	-246.20	-42.39	0.00	349.60	6.043	0.000	231.58	0.00	19.90	0.00	22.54	6.26
73	SEABED	-252.25	-42.39	0.00	355.65	0.000	0.000	231.58	0.00	19.90	0.00	22.54	6.26

S T A T I C P I P E C O O R D I N A T E S, F O R C E S A N D S T R E S S E S

NODE NO.	PIPE SECTION	X COORD (M)	Y COORD (M)	VERT ANGLE (DEG)	PIPE LENGTH (M)	SUPPORT REACTION (KN)	SEPARA -TION (M)	AXIAL TENSION (KN)	BENDING MOMENT (KN-M)	TENSILE STRESS (MPA)	BENDING STRESS (MPA)	TOTAL STRESS (MPA)	PERCNT YIELD (PCT)
1	LAYBARGE	96.31	6.41	1.69	0.00	0.655	0.000	0.00	0.00	0.00	0.00	0.00	0.00
3	LAYBARGE	84.28	6.05	1.70	12.04	1.244	0.000	-0.04	0.00	0.00	0.00	0.00	0.00
5	LAYBARGE	73.45	5.73	1.89	22.87	1.315	0.000	-0.08	0.00	0.00	0.00	0.00	0.00
7	TENSIONR	60.11	5.24	2.20	36.23	1.841	0.000	276.97	0.00	0.00	0.00	0.00	0.00
9	LAYBARGE	51.10	4.88	2.25	45.24	0.000	0.000	276.93	0.00	0.00	0.00	0.00	0.00
10	LAYBARGE	46.45	4.70	2.10	49.89	0.000	0.000	276.91	0.00	0.00	0.00	0.00	0.00
12	LAYBARGE	38.36	4.41	1.97	57.99	0.000	0.000	276.88	0.00	0.00	0.00	0.00	0.00
13	LAYBARGE	35.36	4.31	2.62	60.99	7.510	0.000	276.85	0.00	0.00	0.00	0.00	0.00
15	LAYBARGE	26.35	3.79	3.26	70.02	0.000	0.000	276.82	0.00	0.00	0.00	0.00	0.00
16	LAYBARGE	23.33	3.62	5.29	73.04	21.056	0.000	276.61	0.00	0.00	0.00	0.00	0.00
18	LAYBARGE	11.93	2.14	7.31	84.54	0.000	0.000	276.65	0.00	0.00	0.00	0.00	0.00
19	LAYBARGE	8.89	1.76	9.20	87.60	19.328	0.000	276.44	0.00	0.00	0.00	0.00	0.00
21	LAYBARGE	6.16	1.22	11.13	90.38	0.000	0.000	276.55	0.00	0.00	0.00	0.00	0.00
22	LAYBARGE	3.11	0.62	11.32	93.49	2.752	0.000	276.49	0.00	0.00	0.00	0.00	0.00
24	LAYBARGE	-6.80	-1.40	13.24	103.61	0.000	0.000	276.15	0.00	26.51	0.00	26.59	7.39
27	STINGER	-7.60	-1.59	13.24	104.43	0.000	0.127	275.97	-7.40	26.48	-11.45	38.02	10.56
29	STINGER	-16.49	-3.77	14.89	113.58	40.782	0.000	273.23	-158.12	26.09	-244.79	271.09	75.30
32	STINGER	-25.98	-6.59	18.17	123.48	19.243	0.000	270.53	-140.84	25.67	-218.04	244.08	67.80
34	STINGER	-36.24	-10.34	22.19	134.41	50.529	0.000	266.34	-198.27	25.06	-306.95	332.57	92.38
36	STINGER	-39.02	-11.51	23.41	137.43	0.000	0.304	265.73	-121.51	24.93	-188.11	213.67	59.35
38	SAGBEND	-44.89	-14.14	24.50	143.86	0.000	0.000	263.43	-21.25	24.56	-32.91	58.25	16.18
39	SAGBEND	-50.40	-16.65	24.41	149.91	0.000	0.000	260.91	26.94	24.18	41.71	66.81	18.56
40	SAGBEND	-55.92	-19.12	23.77	155.96	0.000	0.000	258.40	52.55	23.80	81.35	106.19	29.50
41	SAGBEND	-61.47	-21.51	22.84	162.01	0.000	0.000	255.97	66.51	23.43	102.96	127.57	35.44
42	SAGBEND	-67.07	-23.81	21.74	168.06	0.000	0.000	253.65	74.44	23.07	115.25	139.63	38.79
43	SAGBEND	-72.71	-25.99	20.55	174.11	0.000	0.000	251.45	79.23	22.74	122.67	146.83	40.79
44	SAGBEND	-78.40	-28.05	19.29	180.16	0.000	0.000	249.38	82.36	22.42	127.51	151.47	42.08
45	SAGBEND	-84.13	-29.99	18.00	186.21	0.000	0.000	247.44	84.59	22.13	130.96	154.73	42.98
46	SAGBEND	-89.91	-31.79	16.67	192.26	0.000	0.000	245.64	86.31	21.85	133.62	157.22	43.67
47	SAGBEND	-95.72	-33.46	15.32	198.31	0.000	0.000	243.96	87.72	21.59	135.81	159.24	44.23
48	SAGBEND	-101.58	-34.99	13.95	204.36	0.000	0.000	242.43	88.91	21.36	137.65	160.94	44.70
49	SAGBEND	-107.47	-36.38	12.56	210.41	0.000	0.000	241.04	89.92	21.15	139.21	162.36	45.10
50	SAGBEND	-113.39	-37.62	11.16	216.46	0.000	0.000	239.80	90.74	20.96	140.47	163.50	45.42
51	SAGBEND	-119.34	-38.72	9.75	222.51	0.000	0.000	238.70	91.31	20.79	141.36	164.29	45.64
52	SAGBEND	-125.31	-39.67	8.33	228.56	0.000	0.000	237.75	91.54	20.64	141.72	164.55	45.71
53	SAGBEND	-131.31	-40.47	6.91	234.61	0.000	0.000	236.95	91.22	20.52	141.23	163.98	45.55
54	SAGBEND	-137.32	-41.12	5.51	240.66	0.000	0.000	236.30	89.98	20.42	139.31	162.00	45.00
55	SAGBEND	-143.35	-41.63	4.13	246.71	0.000	0.000	235.80	87.13	20.35	134.89	157.53	43.76
56	SAGBEND	-149.39	-42.00	2.82	252.76	0.000	0.000	235.46	81.37	20.29	125.97	148.58	41.27
57	SAGBEND	-155.43	-42.23	1.63	258.81	0.000	0.000	235.26	70.30	20.26	108.83	131.43	36.51
58	SEABED	-161.48	-42.35	0.69	264.86	1.591	0.000	235.20	49.47	20.25	76.58	99.20	27.56
59	SEABED	-167.53	-42.39	0.15	270.91	6.653	0.000	235.23	21.08	20.25	32.64	55.32	15.37

S T A T I C P I P E C O O R D I N A T E S, F O R C E S A N D S T R E S S E S

NODE NO.	PIPE SECTION	X COORD (M)	Y COORD (M)	VERT ANGLE (DEG)	PIPE LENGTH (M)	SUPPORT REACTION (KN)	SEPARA -TION (M)	AXIAL TENSION (KN)	BENDING MOMENT (KN-M)	TENSILE STRESS (MPA)	BENDING STRESS (MPA)	TOTAL STRESS (MPA)	PERCNT YIELD (PCT)
60	SEABED	-173.58	-42.40	-0.03	276.96	7.607	0.000	235.24	4.33	20.25	6.70	29.51	8.20
61	SEABED	-179.63	-42.39	-0.05	283.01	6.912	0.000	235.24	-1.07	20.25	-1.65	24.51	6.81
62	SEABED	-185.68	-42.39	-0.02	289.06	6.307	0.000	235.24	-1.44	20.25	-2.23	25.09	6.97
63	SEABED	-191.73	-42.39	-0.01	295.11	6.052	0.000	235.24	-0.71	20.25	-1.10	23.97	6.66
64	SEABED	-197.78	-42.39	0.00	301.16	6.002	0.000	235.24	-0.19	20.25	-0.29	23.17	6.44
65	SEABED	-203.83	-42.39	0.00	307.21	6.016	0.000	235.24	0.01	20.25	0.02	22.90	6.36
66	SEABED	-209.88	-42.39	0.00	313.26	6.033	0.000	235.24	0.04	20.25	0.06	22.95	6.37
67	SEABED	-215.93	-42.39	0.00	319.31	6.042	0.000	235.24	0.02	20.25	0.04	22.92	6.37
68	SEABED	-221.98	-42.39	0.00	325.36	6.044	0.000	235.24	0.01	20.25	0.01	22.90	6.36
69	SEABED	-228.03	-42.39	0.00	331.41	6.044	0.000	235.24	0.00	20.25	0.00	22.89	6.36
70	SEABED	-234.08	-42.39	0.00	337.46	6.044	0.000	235.24	0.00	20.25	0.00	22.89	6.36
71	SEABED	-240.13	-42.39	0.00	343.51	6.043	0.000	235.24	0.00	20.25	0.00	22.89	6.36
72	SEABED	-246.18	-42.39	0.00	349.56	6.043	0.000	235.24	0.00	20.25	0.00	22.89	6.36
73	SEABED	-252.23	-42.39	0.00	355.61	0.000	0.000	235.24	0.00	20.25	0.00	22.89	6.36

S T A T I C P I P E C O O R D I N A T E S, F O R C E S A N D S T R E S S E S

NODE NO.	PIPE SECTION	X COORD (M)	Y COORD (M)	VERT ANGLE (DEG)	PIPE LENGTH (M)	SUPPORT REACTION (KN)	SEPARA -TION (M)	AXIAL TENSION (KN)	BENDING MOMENT (KN-M)	TENSILE STRESS (MPA)	BENDING STRESS (MPA)	TOTAL STRESS (MPA)	PERCNT YIELD (PCT)
1	LAYBARGE	96.31	6.41	1.69	0.00	0.655	0.000	0.00	0.00	0.00	0.00	0.00	0.00
3	LAYBARGE	84.28	6.05	1.70	12.04	1.244	0.000	-0.04	0.00	0.00	0.00	0.00	0.00
5	LAYBARGE	73.45	5.73	1.89	22.87	1.315	0.000	-0.08	0.00	0.00	0.00	0.00	0.00
7	TENSIONR	60.11	5.24	2.20	36.23	1.831	0.000	270.68	0.00	0.00	0.00	0.00	0.00
9	LAYBARGE	51.10	4.88	2.25	45.24	0.000	0.000	270.64	0.00	0.00	0.00	0.00	0.00
10	LAYBARGE	46.45	4.70	2.10	49.89	0.022	0.000	270.62	0.00	0.00	0.00	0.00	0.00
12	LAYBARGE	38.36	4.41	1.97	57.99	0.000	0.000	270.59	0.00	0.00	0.00	0.00	0.00
13	LAYBARGE	35.36	4.31	2.62	60.99	7.373	0.000	270.56	0.00	0.00	0.00	0.00	0.00
15	LAYBARGE	26.35	3.79	3.26	70.02	0.000	0.000	270.53	0.00	0.00	0.00	0.00	0.00
16	LAYBARGE	23.33	3.62	5.29	73.04	20.611	0.000	270.32	0.00	0.00	0.00	0.00	0.00
18	LAYBARGE	11.93	2.14	7.31	84.54	0.000	0.000	270.37	0.00	0.00	0.00	0.00	0.00
19	LAYBARGE	8.89	1.76	9.20	87.60	18.992	0.000	270.16	0.00	0.00	0.00	0.00	0.00
21	LAYBARGE	6.13	1.21	11.15	90.42	0.000	0.000	270.27	0.00	0.00	0.00	0.00	0.00
22	LAYBARGE	3.08	0.61	13.50	93.53	23.116	0.000	269.96	0.00	0.00	0.00	0.00	0.00
24	LAYBARGE	-6.66	-2.16	20.29	103.66	0.000	0.000	269.11	0.00	25.79	0.00	25.91	7.20
27	STINGER	-7.49	-2.46	20.32	104.54	23.119	0.000	268.79	-18.80	25.74	-29.11	54.99	15.27
29	STINGER	-16.04	-5.68	21.05	113.68	20.393	0.000	265.51	-61.20	25.24	-94.74	120.30	33.42
32	STINGER	-25.18	-9.29	22.02	123.51	6.872	0.000	261.95	-38.03	24.70	-58.87	84.07	23.35
34	STINGER	-35.28	-13.50	23.44	134.44	32.420	0.000	257.59	-92.73	24.04	-143.57	168.34	46.76
36	STINGER	-38.05	-14.72	23.96	137.47	0.000	0.392	256.52	-45.05	23.87	-69.74	94.41	26.23
38	SAGBEND	-43.89	-17.33	24.13	143.86	0.000	0.000	253.95	17.47	23.47	27.04	51.47	14.30
39	SAGBEND	-49.42	-19.78	23.60	149.91	0.000	0.000	251.45	48.43	23.09	74.97	99.15	27.54
40	SAGBEND	-54.98	-22.16	22.70	155.96	0.000	0.000	249.03	65.33	22.72	101.14	125.08	34.75
41	SAGBEND	-60.58	-24.45	21.61	162.01	0.000	0.000	246.72	74.90	22.37	115.96	139.67	38.80
42	SAGBEND	-66.23	-26.61	20.40	168.06	0.000	0.000	244.53	80.61	22.04	124.80	148.30	41.19
43	SAGBEND	-71.92	-28.66	19.12	174.11	0.000	0.000	242.48	84.27	21.72	130.46	153.76	42.71
44	SAGBEND	-77.66	-30.58	17.79	180.16	0.000	0.000	240.56	86.81	21.43	134.40	157.51	43.75
45	SAGBEND	-83.44	-32.36	16.43	186.21	0.000	0.000	238.77	88.72	21.16	137.35	160.29	44.52
46	SAGBEND	-89.27	-34.00	15.04	192.26	0.000	0.000	237.12	90.25	20.91	139.71	162.49	45.14
47	SAGBEND	-95.13	-35.49	13.63	198.31	0.000	0.000	235.62	91.50	20.68	141.65	164.28	45.63
48	SAGBEND	-101.02	-36.85	12.20	204.36	0.000	0.000	234.27	92.53	20.47	143.24	165.74	46.04
49	SAGBEND	-106.95	-38.05	10.76	210.41	0.000	0.000	233.06	93.31	20.28	144.46	166.84	46.34
50	SAGBEND	-112.91	-39.10	9.31	216.46	0.000	0.000	232.01	93.78	20.12	145.19	167.47	46.52
51	SAGBEND	-118.89	-40.01	7.85	222.51	0.000	0.000	231.11	93.80	19.99	145.22	167.41	46.50
52	SAGBEND	-124.90	-40.76	6.40	228.56	0.000	0.000	230.36	93.09	19.87	144.11	166.23	46.17
53	SAGBEND	-130.92	-41.36	4.97	234.61	0.000	0.000	229.77	91.12	19.78	141.07	163.13	45.31
54	SAGBEND	-136.95	-41.81	3.59	240.66	0.000	0.000	229.33	86.96	19.71	134.62	156.64	43.51
55	SAGBEND	-142.99	-42.12	2.30	246.71	0.000	0.000	229.06	78.85	19.67	122.07	144.06	40.02
56	SAGBEND	-149.04	-42.30	1.18	252.76	0.128	0.000	228.92	63.57	19.65	98.41	120.40	33.45
57	SEABED	-155.09	-42.38	0.39	258.81	4.197	0.000	228.92	36.45	19.64	56.44	78.47	21.80
58	SEABED	-161.14	-42.40	0.03	264.86	7.574	0.000	228.94	11.74	19.64	18.18	40.31	11.20
59	SEABED	-167.19	-42.39	-0.05	270.91	7.368	0.000	228.94	0.80	19.64	1.23	23.50	6.53

S T A T I C P I P E C O O R D I N A T E S, F O R C E S A N D S T R E S S E S

NODE NO.	PIPE SECTION	X COORD (M)	Y COORD (M)	VERT ANGLE (DEG)	PIPE LENGTH (M)	SUPPORT REACTION (KN)	SEPARA -TION (M)	AXIAL TENSION (KN)	BENDING MOMENT (KN-M)	TENSILE STRESS (MPA)	BENDING STRESS (MPA)	TOTAL STRESS (MPA)	PERCNT YIELD (PCT)
60	SEABED	-173.24	-42.39	-0.04	276.96	6.597	0.000	228.94	-1.61	19.64	-2.49	24.75	6.87

61	SEABED	-179.29	-42.39	-0.01	283.01	6.151	0.000	228.94	-1.15	19.64	-1.78	24.04	6.68
62	SEABED	-185.34	-42.39	0.00	289.06	6.012	0.000	228.94	-0.43	19.64	-0.67	22.94	6.37
63	SEABED	-191.39	-42.39	0.00	295.11	6.004	0.000	228.94	-0.06	19.64	-0.10	22.38	6.22
64	SEABED	-197.44	-42.39	0.00	301.16	6.024	0.000	228.94	0.04	19.64	0.06	22.35	6.21
65	SEABED	-203.49	-42.39	0.00	307.21	6.039	0.000	228.94	0.04	19.64	0.05	22.34	6.21
66	SEABED	-209.54	-42.39	0.00	313.26	6.044	0.000	228.94	0.02	19.64	0.02	22.31	6.20
67	SEABED	-215.59	-42.39	0.00	319.31	6.044	0.000	228.94	0.00	19.64	0.00	22.29	6.19
68	SEABED	-221.64	-42.39	0.00	325.36	6.044	0.000	228.94	0.00	19.64	0.00	22.29	6.19
69	SEABED	-227.69	-42.39	0.00	331.41	6.043	0.000	228.94	0.00	19.64	0.00	22.29	6.19
70	SEABED	-233.74	-42.39	0.00	337.46	6.043	0.000	228.94	0.00	19.64	0.00	22.29	6.19
71	SEABED	-239.79	-42.39	0.00	343.51	6.043	0.000	228.94	0.00	19.64	0.00	22.29	6.19
72	SEABED	-245.84	-42.39	0.00	349.56	6.043	0.000	228.94	0.00	19.64	0.00	22.29	6.19
73	SEABED	-251.89	-42.39	0.00	355.61	0.000	0.000	228.94	0.00	19.64	0.00	22.29	6.19

S T A T I C P I P E C O O R D I N A T E S, F O R C E S A N D S T R E S S E S

NODE NO.	PIPE SECTION	X COORD (M)	Y COORD (M)	VERT ANGLE (DEG)	PIPE LENGTH (M)	SUPPORT REACTION (KN)	SEPARA -TION (M)	AXIAL TENSION (KN)	BENDING MOMENT (KN-M)	TENSILE STRESS (MPA)	BENDING STRESS (MPA)	TOTAL STRESS (MPA)	PERCNT YIELD (PCT)
1	LAYBARGE	96.31	6.41	1.69	0.00	0.655	0.000	0.00	0.00	0.00	0.00	0.00	0.00
3	LAYBARGE	84.28	6.05	1.70	12.04	1.244	0.000	-0.04	0.00	0.00	0.00	0.00	0.00
5	LAYBARGE	73.45	5.73	1.89	22.87	1.315	0.000	-0.08	0.00	0.00	0.00	0.00	0.00
7	TENSIONR	60.11	5.24	2.20	36.23	1.831	0.000	270.68	0.00	0.00	0.00	0.00	0.00
9	LAYBARGE	51.10	4.88	2.25	45.24	0.000	0.000	270.64	0.00	0.00	0.00	0.00	0.00
10	LAYBARGE	46.45	4.70	2.10	49.89	0.022	0.000	270.62	0.00	0.00	0.00	0.00	0.00
12	LAYBARGE	38.36	4.41	1.97	57.99	0.000	0.000	270.59	0.00	0.00	0.00	0.00	0.00
13	LAYBARGE	35.36	4.31	2.62	60.99	7.373	0.000	270.55	0.00	0.00	0.00	0.00	0.00
15	LAYBARGE	26.35	3.79	3.26	70.02	0.000	0.000	270.53	0.00	0.00	0.00	0.00	0.00
16	LAYBARGE	23.33	3.62	5.29	73.04	20.611	0.000	270.32	0.00	0.00	0.00	0.00	0.00
18	LAYBARGE	11.93	2.14	7.31	84.54	0.000	0.000	270.36	0.00	0.00	0.00	0.00	0.00
19	LAYBARGE	8.89	1.76	9.20	87.60	18.914	0.000	270.16	0.00	0.00	0.00	0.00	0.00
21	LAYBARGE	6.13	1.21	11.13	90.42	0.000	0.000	270.26	0.00	0.00	0.00	0.00	0.00
22	LAYBARGE	3.12	0.62	13.67	93.49	24.886	0.000	269.92	0.00	0.00	0.00	0.00	0.00
24	LAYBARGE	-6.60	-2.21	16.19	103.61	0.000	0.000	269.94	0.00	0.00	0.00	0.00	0.00
27	STINGER	-7.51	-2.47	20.44	104.55	18.179	0.000	269.15	0.00	25.78	0.00	25.91	7.20
29	STINGER	-16.07	-5.69	21.01	113.70	23.440	0.000	265.84	-65.10	25.27	-100.79	126.37	35.10
32	STINGER	-25.21	-9.30	22.01	123.53	6.011	0.000	262.29	-36.23	24.73	-56.09	81.33	22.59
34	STINGER	-35.30	-13.50	23.41	134.46	32.697	0.000	257.93	-93.31	24.07	-144.46	169.27	47.02
36	STINGER	-38.05	-14.71	23.94	137.46	0.000	0.392	256.88	-45.80	23.90	-70.90	95.61	26.56
38	SAGBEND	-43.81	-17.29	24.12	143.77	0.000	0.000	254.34	16.51	23.51	25.57	50.04	13.90
39	SAGBEND	-49.34	-19.74	23.59	149.82	0.000	0.000	251.85	47.88	23.13	74.12	98.34	27.32
40	SAGBEND	-54.91	-22.12	22.71	155.87	0.000	0.000	249.43	64.99	22.76	100.61	124.58	34.61
41	SAGBEND	-60.51	-24.40	21.62	161.92	0.000	0.000	247.12	74.65	22.41	115.58	139.33	38.70
42	SAGBEND	-66.15	-26.57	20.41	167.97	0.000	0.000	244.93	80.41	22.08	124.49	148.03	41.12
43	SAGBEND	-71.85	-28.62	19.13	174.02	0.000	0.000	242.87	84.10	21.76	130.19	153.53	42.65
44	SAGBEND	-77.59	-30.53	17.81	180.07	0.000	0.000	240.95	86.65	21.47	134.14	157.29	43.69
45	SAGBEND	-83.37	-32.32	16.45	186.12	0.000	0.000	239.16	88.56	21.20	137.11	160.08	44.47
46	SAGBEND	-89.19	-33.96	15.06	192.17	0.000	0.000	237.51	90.09	20.95	139.47	162.28	45.08
47	SAGBEND	-95.05	-35.46	13.65	198.22	0.000	0.000	236.01	91.34	20.72	141.41	164.08	45.58
48	SAGBEND	-100.95	-36.81	12.23	204.27	0.000	0.000	234.65	92.37	20.51	143.00	165.54	45.98
49	SAGBEND	-106.88	-38.02	10.79	210.32	0.000	0.000	233.44	93.16	20.32	144.22	166.64	46.29
50	SAGBEND	-112.83	-39.08	9.34	216.37	0.000	0.000	232.38	93.64	20.16	144.97	167.29	46.47
51	SAGBEND	-118.81	-39.99	7.89	222.42	0.000	0.000	231.48	93.68	20.02	145.03	167.25	46.46
52	SAGBEND	-124.82	-40.74	6.44	228.47	0.000	0.000	230.73	92.99	19.91	143.97	166.12	46.14
53	SAGBEND	-130.84	-41.34	5.01	234.52	0.000	0.000	230.13	91.08	19.82	141.01	163.10	45.31
54	SAGBEND	-136.87	-41.80	3.62	240.57	0.000	0.000	229.70	87.02	19.75	134.71	156.77	43.55
55	SAGBEND	-142.91	-42.11	2.33	246.62	0.000	0.000	229.41	79.08	19.70	122.43	144.46	40.13
56	SAGBEND	-148.96	-42.30	1.21	252.67	0.101	0.000	229.28	64.11	19.68	99.25	121.28	33.69
57	SEABED	-155.01	-42.38	0.41	258.72	4.014	0.000	229.26	37.34	19.67	57.81	79.88	22.19
58	SEABED	-161.06	-42.40	0.04	264.77	7.542	0.000	229.29	12.27	19.68	19.00	41.16	11.43
59	SEABED	-167.11	-42.39	-0.05	270.82	7.389	0.000	229.30	0.97	19.68	1.50	23.80	6.61

S T A T I C P I P E C O O R D I N A T E S, F O R C E S A N D S T R E S S E S

NODE NO.	PIPE SECTION	X COORD (M)	Y COORD (M)	VERT ANGLE (DEG)	PIPE LENGTH (M)	SUPPORT REACTION (KN)	SEPARA -TION (M)	AXIAL TENSION (KN)	BENDING MOMENT (KN-M)	TENSILE STRESS (MPA)	BENDING STRESS (MPA)	TOTAL STRESS (MPA)	PERCNT YIELD (PCT)
60	SEABED	-173.16	-42.39	-0.04	276.87	6.616	0.000	229.29	-1.60	19.68	-2.47	24.76	6.88
61	SEABED	-179.21	-42.39	-0.01	282.92	6.160	0.000	229.29	-1.17	19.68	-1.82	24.11	6.70
62	SEABED	-185.26	-42.39	0.00	288.97	6.013	0.000	229.29	-0.45	19.68	-0.69	23.00	6.39
63	SEABED	-191.31	-42.39	0.00	295.02	6.004	0.000	229.29	-0.07	19.68	-0.11	22.43	6.23
64	SEABED	-197.36	-42.39	0.00	301.07	6.024	0.000	229.29	0.04	19.68	0.06	22.38	6.22
65	SEABED	-203.41	-42.39	0.00	307.12	6.038	0.000	229.29	0.04	19.68	0.06	22.38	6.22
66	SEABED	-209.46	-42.39	0.00	313.17	6.044	0.000	229.29	0.02	19.68	0.02	22.35	6.21
67	SEABED	-215.51	-42.39	0.00	319.22	6.044	0.000	229.29	0.00	19.68	0.01	22.33	6.20
68	SEABED	-221.56	-42.39	0.00	325.27	6.044	0.000	229.29	0.00	19.68	0.00	22.32	6.20
69	SEABED	-227.61	-42.39	0.00	331.32	6.043	0.000	229.29	0.00	19.68	0.00	22.32	6.20
70	SEABED	-233.66	-42.39	0.00	337.37	6.043	0.000	229.29	0.00	19.68	0.00	22.32	6.20
71	SEABED	-239.71	-42.39	0.00	343.42	6.043	0.000	229.29	0.00	19.68	0.00	22.32	6.20
72	SEABED	-245.76	-42.39	0.00	349.47	6.043	0.000	229.29	0.00	19.68	0.00	22.32	6.20
73	SEABED	-251.81	-42.39	0.00	355.52	0.000	0.000	229.29	0.00	19.68	0.00	22.32	6.20

S T A T I C P I P E C O O R D I N A T E S, F O R C E S A N D S T R E S S E S

NODE NO.	PIPE SECTION	X COORD (M)	Y COORD (M)	VERT ANGLE (DEG)	PIPE LENGTH (M)	SUPPORT REACTION (KN)	SEPARA -TION (M)	AXIAL TENSION (KN)	BENDING MOMENT (KN-M)	TENSILE STRESS (MPA)	BENDING STRESS (MPA)	TOTAL STRESS (MPA)	PERCNT YIELD (PCT)
1	LAYBARGE	96.31	6.41	1.69	0.00	0.655	0.000	0.00	0.00	0.00	0.00	0.00	0.00
3	LAYBARGE	84.28	6.05	1.70	12.04	1.244	0.000	-0.04	0.00	0.00	0.00	0.00	0.00
5	LAYBARGE	73.45	5.73	1.89	22.87	1.315	0.000	-0.08	0.00	0.00	0.00	0.00	0.00
7	TENSIONR	60.11	5.24	2.20	36.23	1.820	0.000	264.38	0.00	0.00	0.00	0.00	0.00
9	LAYBARGE	51.10	4.88	2.25	45.24	0.000	0.000	264.34	0.00	0.00	0.00	0.00	0.00
10	LAYBARGE	46.45	4.70	2.10	49.89	0.053	0.000	264.32	0.00	0.00	0.00	0.00	0.00
12	LAYBARGE	38.36	4.41	1.97	57.99	0.000	0.000	264.29	0.00	0.00	0.00	0.00	0.00
13	LAYBARGE	35.36	4.31	2.62	60.99	7.230	0.000	264.26	0.00	0.00	0.00	0.00	0.00
15	LAYBARGE	26.35	3.79	3.26	70.02	0.000	0.000	264.23	0.00	0.00	0.00	0.00	0.00
16	LAYBARGE	23.33	3.62	5.29	73.04	20.165	0.000	264.02	0.00	0.00	0.00	0.00	0.00
18	LAYBARGE	11.93	2.14	7.31	84.54	0.000	0.000	264.06	0.00	0.00	0.00	0.00	0.00
19	LAYBARGE	8.89	1.76	9.20	87.60	18.500	0.000	263.86	0.00	0.00	0.00	0.00	0.00
21	LAYBARGE	6.13	1.21	11.13	90.42	0.000	0.000	263.96	0.00	0.00	0.00	0.00	0.00
22	LAYBARGE	3.12	0.62	13.67	93.49	24.323	0.000	263.62	0.00	0.00	0.00	0.00	0.00
24	LAYBARGE	-6.60	-2.21	16.19	103.61	0.000	0.000	263.64	0.00	0.00	0.00	0.00	0.00
27	STINGER	-7.51	-2.47	20.42	104.55	17.130	0.000	262.87	0.00	25.17	0.00	25.31	7.03
29	STINGER	-16.06	-5.69	21.05	113.70	24.472	0.000	259.54	-70.30	24.67	-108.84	133.82	37.17
32	STINGER	-25.20	-9.32	22.15	123.53	6.409	0.000	255.99	-40.08	24.12	-62.04	86.67	24.08
34	STINGER	-35.28	-13.55	23.62	134.46	32.546	0.000	251.61	-94.38	23.46	-146.11	170.31	47.31
36	STINGER	-38.03	-14.77	24.16	137.46	0.000	0.390	250.54	-46.55	23.29	-72.06	96.15	26.71
38	SAGBEND	-43.78	-17.37	24.34	143.77	0.000	0.000	247.99	16.53	22.89	25.60	49.46	13.74
39	SAGBEND	-49.30	-19.84	23.81	149.82	0.000	0.000	245.47	48.58	22.51	75.21	98.81	27.45
40	SAGBEND	-54.85	-22.24	22.91	155.87	0.000	0.000	243.03	66.21	22.14	102.51	125.87	34.96
41	SAGBEND	-60.45	-24.54	21.80	161.92	0.000	0.000	240.69	76.27	21.79	118.08	141.21	39.22
42	SAGBEND	-66.09	-26.73	20.56	167.97	0.000	0.000	238.49	82.31	21.45	127.43	150.34	41.76
43	SAGBEND	-71.78	-28.79	19.25	174.02	0.000	0.000	236.42	86.19	21.13	133.44	156.15	43.38
44	SAGBEND	-77.51	-30.72	17.90	180.07	0.000	0.000	234.48	88.90	20.84	137.63	160.15	44.49
45	SAGBEND	-83.29	-32.51	16.50	186.12	0.000	0.000	232.69	90.93	20.56	140.77	163.12	45.31
46	SAGBEND	-89.11	-34.15	15.08	192.17	0.000	0.000	231.03	92.54	20.31	143.26	165.45	45.96
47	SAGBEND	-94.97	-35.65	13.63	198.22	0.000	0.000	229.53	93.86	20.08	145.30	167.34	46.48
48	SAGBEND	-100.87	-37.00	12.17	204.27	0.000	0.000	228.18	94.92	19.87	146.95	168.85	46.90
49	SAGBEND	-106.80	-38.20	10.69	210.32	0.000	0.000	226.98	95.70	19.69	148.16	169.95	47.21
50	SAGBEND	-112.76	-39.25	9.20	216.37	0.000	0.000	225.93	96.13	19.53	148.82	170.51	47.36
51	SAGBEND	-118.74	-40.14	7.71	222.42	0.000	0.000	225.04	96.02	19.39	148.65	170.25	47.29
52	SAGBEND	-124.75	-40.87	6.23	228.47	0.000	0.000	224.31	95.04	19.28	147.14	168.67	46.85
53	SAGBEND	-130.77	-41.45	4.77	234.52	0.000	0.000	223.74	92.60	19.20	143.35	164.83	45.79
54	SAGBEND	-136.80	-41.88	3.37	240.57	0.000	0.000	223.34	87.57	19.13	135.58	157.02	43.62
55	SAGBEND	-142.85	-42.16	2.08	246.62	0.000	0.000	223.09	77.95	19.09	120.68	142.10	39.47
56	SAGBEND	-148.89	-42.32	0.99	252.67	0.465	0.000	222.98	60.03	19.07	92.93	114.36	31.77
57	SEABED	-154.94	-42.39	0.28	258.72	5.427	0.000	223.00	30.67	19.07	47.48	68.95	19.15
58	SEABED	-160.99	-42.40	0.00	264.77	7.745	0.000	223.02	8.44	19.07	13.06	34.65	9.63
59	SEABED	-167.04	-42.39	-0.05	270.82	7.223	0.000	223.02	-0.25	19.07	-0.38	22.10	6.14

S T A T I C P I P E C O O R D I N A T E S, F O R C E S A N D S T R E S S E S

NODE NO.	PIPE SECTION	X COORD (M)	Y COORD (M)	VERT ANGLE (DEG)	PIPE LENGTH (M)	SUPPORT REACTION (KN)	SEPARA -TION (M)	AXIAL TENSION (KN)	BENDING MOMENT (KN-M)	TENSILE STRESS (MPA)	BENDING STRESS (MPA)	TOTAL STRESS (MPA)	PERCNT YIELD (PCT)

60	SEABED	-173.09	-42.39	-0.03	276.87	6.474	0.000	223.02	-1.67	19.07	-2.59	24.28	6.74
61	SEABED	-179.14	-42.39	-0.01	282.92	6.100	0.000	223.02	-1.00	19.07	-1.55	23.25	6.46
62	SEABED	-185.19	-42.39	0.00	288.97	6.001	0.000	223.02	-0.33	19.07	-0.50	22.22	6.17
63	SEABED	-191.24	-42.39	0.00	295.02	6.007	0.000	223.02	-0.02	19.07	-0.04	21.76	6.05
64	SEABED	-197.29	-42.39	0.00	301.07	6.028	0.000	223.02	0.04	19.07	0.07	21.79	6.05
65	SEABED	-203.34	-42.39	0.00	307.12	6.040	0.000	223.02	0.03	19.07	0.05	21.78	6.05
66	SEABED	-209.39	-42.39	0.00	313.17	6.044	0.000	223.02	0.01	19.07	0.02	21.75	6.04
67	SEABED	-215.44	-42.39	0.00	319.22	6.044	0.000	223.02	0.00	19.07	0.00	21.73	6.04
68	SEABED	-221.49	-42.39	0.00	325.27	6.044	0.000	223.02	0.00	19.07	0.00	21.73	6.04
69	SEABED	-227.54	-42.39	0.00	331.32	6.043	0.000	223.02	0.00	19.07	0.00	21.73	6.04
70	SEABED	-233.59	-42.39	0.00	337.37	6.043	0.000	223.02	0.00	19.07	0.00	21.73	6.04
71	SEABED	-239.64	-42.39	0.00	343.42	6.043	0.000	223.02	0.00	19.07	0.00	21.73	6.04
72	SEABED	-245.69	-42.39	0.00	349.47	6.043	0.000	223.02	0.00	19.07	0.00	21.73	6.04
73	SEABED	-251.74	-42.39	0.00	355.52	0.000	0.000	223.02	0.00	19.07	0.00	21.73	6.04

S T A T I C P I P E C O O R D I N A T E S, F O R C E S A N D S T R E S S E S

NODE NO.	PIPE SECTION	X COORD (M)	Y COORD (M)	VERT ANGLE (DEG)	PIPE LENGTH (M)	SUPPORT REACTION (KN)	SEPARA -TION (M)	AXIAL TENSION (KN)	BENDING MOMENT (KN-M)	TENSILE STRESS (MPA)	BENDING STRESS (MPA)	TOTAL STRESS (MPA)	PERCNT YIELD (PCT)
1	LAYBARGE	96.31	6.41	1.69	0.00	0.655	0.000	0.00	0.00	0.00	0.00	0.00	0.00
3	LAYBARGE	84.28	6.05	1.70	12.04	1.244	0.000	-0.04	0.00	0.00	0.00	0.00	0.00
5	LAYBARGE	73.45	5.73	1.89	22.87	1.315	0.000	-0.08	0.00	0.00	0.00	0.00	0.00
7	TENSIONR	60.11	5.24	2.20	36.23	1.820	0.000	264.39	0.00	0.00	0.00	0.00	0.00
9	LAYBARGE	51.10	4.88	2.25	45.24	0.000	0.000	264.35	0.00	0.00	0.00	0.00	0.00
10	LAYBARGE	46.45	4.70	2.10	49.89	0.053	0.000	264.34	0.00	0.00	0.00	0.00	0.00
12	LAYBARGE	38.36	4.41	1.97	57.99	0.000	0.000	264.30	0.00	0.00	0.00	0.00	0.00
13	LAYBARGE	35.36	4.31	2.62	60.99	7.231	0.000	264.27	0.00	0.00	0.00	0.00	0.00
15	LAYBARGE	26.35	3.79	3.26	70.02	0.000	0.000	264.24	0.00	0.00	0.00	0.00	0.00
16	LAYBARGE	23.33	3.62	5.29	73.04	20.165	0.000	264.04	0.00	0.00	0.00	0.00	0.00
18	LAYBARGE	11.93	2.14	7.31	84.54	0.000	0.000	264.08	0.00	0.00	0.00	0.00	0.00
19	LAYBARGE	8.89	1.76	9.20	87.60	18.502	0.000	263.88	0.00	0.00	0.00	0.00	0.00
21	LAYBARGE	6.13	1.21	11.13	90.42	0.000	0.000	263.98	0.00	0.00	0.00	0.00	0.00
22	LAYBARGE	3.12	0.62	13.55	93.49	23.236	0.000	263.66	0.00	0.00	0.00	0.00	0.00
24	LAYBARGE	-6.62	-2.17	15.95	103.61	0.000	0.000	263.66	0.00	0.00	0.00	0.00	0.00
27	STINGER	-7.50	-2.42	18.02	104.54	19.983	0.000	263.45	0.00	0.00	0.00	0.00	0.00
29	STINGER	-16.09	-5.57	21.31	113.68	3.527	0.000	263.29	0.00	25.04	0.00	25.34	7.04
32	STINGER	-25.25	-9.18	22.01	123.53	22.803	0.000	259.55	-75.47	24.47	-116.83	141.80	39.39
34	STINGER	-35.32	-13.43	23.78	134.46	27.336	0.000	255.28	-83.25	23.82	-128.89	153.44	42.62
36	STINGER	-38.07	-14.66	24.24	137.47	0.000	0.390	254.18	-38.45	23.64	-59.52	83.97	23.33
38	SAGBEND	-43.81	-17.26	24.33	143.77	0.000	0.000	251.61	20.37	23.25	31.54	55.75	15.48
39	SAGBEND	-49.33	-19.72	23.76	149.82	0.000	0.000	249.09	50.20	22.87	77.71	101.66	28.24
40	SAGBEND	-54.89	-22.12	22.85	155.87	0.000	0.000	246.66	66.57	22.50	103.06	126.77	35.21
41	SAGBEND	-60.48	-24.42	21.73	161.92	0.000	0.000	244.33	75.90	22.14	117.50	140.98	39.16
42	SAGBEND	-66.13	-26.60	20.51	167.97	0.000	0.000	242.14	81.51	21.81	126.19	149.46	41.52
43	SAGBEND	-71.82	-28.65	19.22	174.02	0.000	0.000	240.07	85.14	21.49	131.81	154.87	43.02
44	SAGBEND	-77.55	-30.58	17.87	180.07	0.000	0.000	238.14	87.68	21.20	135.75	158.62	44.06
45	SAGBEND	-83.33	-32.37	16.50	186.12	0.000	0.000	236.34	89.61	20.92	138.73	161.43	44.84
46	SAGBEND	-89.15	-34.01	15.10	192.17	0.000	0.000	234.69	91.15	20.67	141.12	163.66	45.46
47	SAGBEND	-95.01	-35.52	13.67	198.22	0.000	0.000	233.18	92.43	20.44	143.09	165.48	45.97
48	SAGBEND	-100.91	-36.87	12.23	204.27	0.000	0.000	231.83	93.47	20.23	144.70	166.96	46.38
49	SAGBEND	-106.84	-38.08	10.78	210.32	0.000	0.000	230.62	94.26	20.05	145.92	168.07	46.69
50	SAGBEND	-112.79	-39.13	9.31	216.37	0.000	0.000	229.56	94.72	19.89	146.64	168.69	46.86
51	SAGBEND	-118.78	-40.04	7.84	222.42	0.000	0.000	228.66	94.71	19.75	146.62	168.58	46.83
52	SAGBEND	-124.78	-40.78	6.38	228.47	0.000	0.000	227.92	93.92	19.63	145.41	167.29	46.47
53	SAGBEND	-130.80	-41.38	4.93	234.52	0.000	0.000	227.33	91.82	19.54	142.15	163.98	45.55
54	SAGBEND	-136.83	-41.83	3.54	240.57	0.000	0.000	226.90	87.41	19.48	135.33	157.12	43.64
55	SAGBEND	-142.88	-42.13	2.24	246.62	0.000	0.000	226.63	78.88	19.43	122.11	143.88	39.97
56	SAGBEND	-148.92	-42.31	1.13	252.67	0.191	0.000	226.51	62.86	19.41	97.32	119.08	33.08
57	SEABED	-154.97	-42.38	0.36	258.72	4.545	0.000	226.50	34.98	19.41	54.15	75.95	21.10
58	SEABED	-161.02	-42.40	0.02	264.77	7.642	0.000	226.53	10.82	19.41	16.75	38.66	10.74
59	SEABED	-167.07	-42.39	-0.05	270.82	7.335	0.000	226.53	0.48	19.41	0.74	22.79	6.33

S T A T I C P I P E C O O R D I N A T E S, F O R C E S A N D S T R E S S E S

NODE NO.	PIPE SECTION	X COORD	Y COORD	VERT ANGLE	PIPE LENGTH	SUPPORT REACTION	SEPARA -TION	AXIAL TENSION	BENDING MOMENT	TENSILE STRESS	BENDING STRESS	TOTAL STRESS	PERCNT YIELD
		(M)	(M)	(DEG)	(M)	(KN)	(M)	(KN)	(KN-M)	(MPA)	(MPA)	(MPA)	(PCT)
60	SEABED	-173.12	-42.39	-0.04	276.87	6.564	0.000	226.53	-1.65	19.41	-2.55	24.57	6.83
61	SEABED	-179.17	-42.39	-0.01	282.92	6.136	0.000	226.53	-1.12	19.41	-1.73	23.76	6.60
62	SEABED	-185.22	-42.39	0.00	288.97	6.008	0.000	226.53	-0.40	19.41	-0.62	22.67	6.30
63	SEABED	-191.27	-42.39	0.00	295.02	6.004	0.000	226.53	-0.05	19.41	-0.08	22.14	6.15
64	SEABED	-197.32	-42.39	0.00	301.07	6.025	0.000	226.53	0.04	19.41	0.06	22.12	6.14
65	SEABED	-203.37	-42.39	0.00	307.12	6.039	0.000	226.53	0.03	19.41	0.05	22.11	6.14
66	SEABED	-209.42	-42.39	0.00	313.17	6.044	0.000	226.53	0.01	19.41	0.02	22.08	6.13
67	SEABED	-215.47	-42.39	0.00	319.22	6.044	0.000	226.53	0.00	19.41	0.00	22.06	6.13
68	SEABED	-221.52	-42.39	0.00	325.27	6.044	0.000	226.53	0.00	19.41	0.00	22.06	6.13
69	SEABED	-227.57	-42.39	0.00	331.32	6.043	0.000	226.53	0.00	19.41	0.00	22.06	6.13
70	SEABED	-233.62	-42.39	0.00	337.37	6.043	0.000	226.53	0.00	19.41	0.00	22.06	6.13
71	SEABED	-239.67	-42.39	0.00	343.42	6.043	0.000	226.53	0.00	19.41	0.00	22.06	6.13
72	SEABED	-245.72	-42.39	0.00	349.47	6.043	0.000	226.53	0.00	19.41	0.00	22.06	6.13
73	SEABED	-251.77	-42.39	0.00	355.52	0.000	0.000	226.53	0.00	19.41	0.00	22.06	6.13

S T A T I C P I P E C O O R D I N A T E S, F O R C E S A N D S T R E S S E S

NODE NO.	PIPE SECTION	X COORD (M)	Y COORD (M)	VERT ANGLE (DEG)	PIPE LENGTH (M)	SUPPORT REACTION (KN)	SEPARA -TION (M)	AXIAL TENSION (KN)	BENDING MOMENT (KN-M)	TENSILE STRESS (MPA)	BENDING STRESS (MPA)	TOTAL STRESS (MPA)	PERCNT YIELD (PCT)
1	LAYBARGE	96.31	6.41	1.69	0.00	0.655	0.000	0.00	0.00	0.00	0.00	0.00	0.00
3	LAYBARGE	84.28	6.05	1.70	12.04	1.244	0.000	-0.04	0.00	0.00	0.00	0.00	0.00
5	LAYBARGE	73.45	5.73	1.89	22.87	1.315	0.000	-0.08	0.00	0.00	0.00	0.00	0.00
7	TENSIONR	60.11	5.24	2.20	36.23	1.797	0.000	251.79	0.00	0.00	0.00	0.00	0.00
9	LAYBARGE	51.10	4.88	2.25	45.24	0.000	0.000	251.76	0.00	0.00	0.00	0.00	0.00
10	LAYBARGE	46.45	4.70	2.10	49.89	0.115	0.000	251.74	0.00	0.00	0.00	0.00	0.00
12	LAYBARGE	38.36	4.41	1.97	57.99	0.000	0.000	251.71	0.00	0.00	0.00	0.00	0.00
13	LAYBARGE	35.36	4.31	2.61	60.99	6.946	0.000	251.67	0.00	0.00	0.00	0.00	0.00
15	LAYBARGE	26.35	3.79	3.26	70.02	0.000	0.000	251.64	0.00	0.00	0.00	0.00	0.00
16	LAYBARGE	23.33	3.62	5.29	73.04	19.273	0.000	251.45	0.00	0.00	0.00	0.00	0.00
18	LAYBARGE	11.93	2.14	7.30	84.54	0.000	0.000	251.48	0.00	0.00	0.00	0.00	0.00
19	LAYBARGE	8.89	1.76	9.19	87.60	17.676	0.000	251.28	0.00	0.00	0.00	0.00	0.00
21	LAYBARGE	6.13	1.21	11.14	90.42	0.000	0.000	251.38	0.00	0.00	0.00	0.00	0.00
22	LAYBARGE	3.11	0.62	13.62	93.49	22.763	0.000	251.06	0.00	0.00	0.00	0.00	0.00
24	LAYBARGE	-6.61	-2.19	16.09	103.61	0.000	0.000	251.05	0.00	0.00	0.00	0.00	0.00
27	STINGER	-7.51	-2.45	18.22	104.55	19.639	0.000	250.84	0.00	0.00	0.00	0.00	0.00
29	STINGER	-16.08	-5.64	21.63	113.69	3.160	0.000	250.68	0.00	23.82	0.00	24.13	6.70
32	STINGER	-25.21	-9.30	22.37	123.53	23.296	0.000	246.88	-78.76	23.24	-121.94	145.69	40.47
34	STINGER	-35.25	-13.62	24.21	134.46	27.123	0.000	242.55	-84.33	22.58	-130.55	153.88	42.74
36	STINGER	-37.99	-14.86	24.67	137.47	0.000	0.388	241.43	-39.10	22.40	-60.54	83.76	23.27
38	SAGBEND	-43.71	-17.51	24.77	143.77	0.000	0.000	238.82	20.98	22.00	32.47	55.45	15.40
39	SAGBEND	-49.21	-20.02	24.18	149.82	0.000	0.000	236.26	52.01	21.61	80.52	103.23	28.68
40	SAGBEND	-54.75	-22.45	23.22	155.87	0.000	0.000	233.78	69.36	21.24	107.38	129.84	36.07
41	SAGBEND	-60.33	-24.78	22.06	161.92	0.000	0.000	231.42	79.43	20.88	122.96	145.20	40.33
42	SAGBEND	-65.96	-26.99	20.78	167.97	0.000	0.000	229.19	85.59	20.54	132.50	154.52	42.92
43	SAGBEND	-71.65	-29.07	19.42	174.02	0.000	0.000	227.10	89.62	20.22	138.75	160.56	44.60
44	SAGBEND	-77.38	-31.01	18.01	180.07	0.000	0.000	225.14	92.48	19.92	143.17	164.79	45.78
45	SAGBEND	-83.15	-32.81	16.55	186.12	0.000	0.000	223.34	94.64	19.65	146.51	167.96	46.66
46	SAGBEND	-88.97	-34.46	15.07	192.17	0.000	0.000	221.69	96.36	19.39	149.17	170.46	47.35
47	SAGBEND	-94.83	-35.95	13.57	198.22	0.000	0.000	220.18	97.75	19.16	151.33	172.47	47.91
48	SAGBEND	-100.73	-37.30	12.04	204.27	0.000	0.000	218.84	98.84	18.96	153.01	174.02	48.34
49	SAGBEND	-106.67	-38.48	10.50	210.32	0.000	0.000	217.66	99.59	18.78	154.18	175.07	48.63
50	SAGBEND	-112.63	-39.50	8.96	216.37	0.000	0.000	216.63	99.88	18.62	154.63	175.42	48.73
51	SAGBEND	-118.62	-40.36	7.41	222.42	0.000	0.000	215.77	99.47	18.49	154.00	174.71	48.53
52	SAGBEND	-124.63	-41.06	5.88	228.47	0.000	0.000	215.08	97.93	18.38	151.62	172.26	47.85
53	SAGBEND	-130.65	-41.60	4.38	234.52	0.000	0.000	214.56	94.47	18.30	146.26	166.85	46.35
54	SAGBEND	-136.69	-41.99	2.96	240.57	0.000	0.000	214.20	87.66	18.25	135.71	156.28	43.41
55	SAGBEND	-142.74	-42.23	1.69	246.62	0.000	0.000	214.00	74.92	18.21	115.99	136.54	37.93
56	SEABED	-148.78	-42.35	0.69	252.67	1.838	0.000	213.95	51.60	18.20	79.89	100.46	27.90
57	SEABED	-154.83	-42.39	0.14	258.72	6.993	0.000	213.98	21.28	18.20	32.94	53.58	14.88
58	SEABED	-160.88	-42.40	-0.04	264.77	7.755	0.000	213.99	3.97	18.20	6.15	26.93	7.48
59	SEABED	-166.93	-42.39	-0.05	270.82	6.942	0.000	213.99	-1.37	18.20	-2.12	22.95	6.38

S T A T I C P I P E C O O R D I N A T E S, F O R C E S A N D S T R E S S E S

NODE	PIPE	X	Y	VERT	PIPE	SUPPORT	SEPARA	AXIAL	BENDING	TENSILE	BENDING	TOTAL	PERCNT

NO.	SECTION	COORD (M)	COORD (M)	ANGLE (DEG)	LENGTH (M)	REACTION (KN)	-TION (M)	TENSION (KN)	MOMENT (KN-M)	STRESS (MPA)	STRESS (MPA)	STRESS (MPA)	YIELD (PCT)
60	SEABED	-172.98	-42.39	-0.02	276.87	6.295	0.000	213.99	-1.57	18.20	-2.43	23.27	6.46
61	SEABED	-179.03	-42.39	-0.01	282.92	6.038	0.000	213.99	-0.74	18.20	-1.14	21.99	6.11
62	SEABED	-185.08	-42.39	0.00	288.97	5.995	0.000	213.99	-0.18	18.20	-0.27	21.14	5.87
63	SEABED	-191.13	-42.39	0.00	295.02	6.014	0.000	213.99	0.02	18.20	0.04	20.91	5.81
64	SEABED	-197.18	-42.39	0.00	301.07	6.034	0.000	213.99	0.05	18.20	0.07	20.94	5.82
65	SEABED	-203.23	-42.39	0.00	307.12	6.043	0.000	213.99	0.02	18.20	0.04	20.91	5.81
66	SEABED	-209.28	-42.39	0.00	313.17	6.045	0.000	213.99	0.01	18.20	0.01	20.88	5.80
67	SEABED	-215.33	-42.39	0.00	319.22	6.044	0.000	213.99	0.00	18.20	0.00	20.87	5.80
68	SEABED	-221.38	-42.39	0.00	325.27	6.044	0.000	213.99	0.00	18.20	0.00	20.88	5.80
69	SEABED	-227.43	-42.39	0.00	331.32	6.043	0.000	213.99	0.00	18.20	0.00	20.87	5.80
70	SEABED	-233.48	-42.39	0.00	337.37	6.043	0.000	213.99	0.00	18.20	0.00	20.87	5.80
71	SEABED	-239.53	-42.39	0.00	343.42	6.043	0.000	213.99	0.00	18.20	0.00	20.87	5.80
72	SEABED	-245.58	-42.39	0.00	349.47	0.000	0.000	213.99	0.00	18.20	0.00	20.87	5.80

S T A T I C P I P E C O O R D I N A T E S, F O R C E S A N D S T R E S S E S

NODE NO.	PIPE SECTION	X COORD (M)	Y COORD (M)	VERT ANGLE (DEG)	PIPE LENGTH (M)	SUPPORT REACTION (KN)	SEPARA -TION (M)	AXIAL TENSION (KN)	BENDING MOMENT (KN-M)	TENSILE STRESS (MPA)	BENDING STRESS (MPA)	TOTAL STRESS (MPA)	PERCNT YIELD (PCT)
1	LAYBARGE	96.31	6.41	1.69	0.00	0.655	0.000	0.00	0.00	0.00	0.00	0.00	0.00
3	LAYBARGE	84.28	6.05	1.70	12.04	1.244	0.000	-0.04	0.00	0.00	0.00	0.00	0.00
5	LAYBARGE	73.45	5.73	1.89	22.87	1.315	0.000	-0.08	0.00	0.00	0.00	0.00	0.00
7	TENSIONR	60.11	5.24	2.20	36.23	1.797	0.000	251.78	0.00	0.00	0.00	0.00	0.00
9	LAYBARGE	51.10	4.88	2.25	45.24	0.000	0.000	251.74	0.00	0.00	0.00	0.00	0.00
10	LAYBARGE	46.45	4.70	2.10	49.89	0.115	0.000	251.72	0.00	0.00	0.00	0.00	0.00
12	LAYBARGE	38.36	4.41	1.97	57.99	0.000	0.000	251.69	0.00	0.00	0.00	0.00	0.00
13	LAYBARGE	35.36	4.31	2.61	60.99	6.946	0.000	251.66	0.00	0.00	0.00	0.00	0.00
15	LAYBARGE	26.35	3.79	3.26	70.02	0.000	0.000	251.63	0.00	0.00	0.00	0.00	0.00
16	LAYBARGE	23.33	3.62	5.29	73.04	19.272	0.000	251.44	0.00	0.00	0.00	0.00	0.00
18	LAYBARGE	11.93	2.14	7.30	84.54	0.000	0.000	251.47	0.00	0.00	0.00	0.00	0.00
19	LAYBARGE	8.89	1.76	9.19	87.60	17.672	0.000	251.27	0.00	0.00	0.00	0.00	0.00
21	LAYBARGE	6.13	1.21	11.14	90.42	0.000	0.000	251.37	0.00	0.00	0.00	0.00	0.00
22	LAYBARGE	3.11	0.62	12.82	93.49	15.721	0.000	251.18	0.00	0.00	0.00	0.00	0.00
24	LAYBARGE	-6.69	-1.92	14.48	103.61	0.000	0.000	251.06	0.00	0.00	0.00	0.00	0.00
27	STINGER	-7.56	-2.14	15.85	104.51	12.951	0.000	250.96	0.00	0.00	0.00	0.00	0.00
29	STINGER	-16.29	-4.86	19.04	113.66	16.339	0.000	250.66	0.00	0.00	0.00	0.00	0.00
32	STINGER	-25.52	-8.37	24.08	123.54	13.883	0.000	250.03	0.00	23.60	0.00	24.07	6.69
34	STINGER	-35.49	-12.86	24.75	134.47	29.953	0.000	245.43	-71.35	22.90	-110.45	134.06	37.24
36	STINGER	-38.21	-14.13	25.14	137.48	0.000	0.413	244.26	-29.74	22.72	-46.04	69.54	19.32
38	SAGBEND	-43.91	-16.81	25.12	143.77	0.000	0.000	241.59	25.47	22.31	39.43	62.67	17.41
39	SAGBEND	-49.40	-19.35	24.49	149.82	0.000	0.000	239.00	53.98	21.92	83.57	106.54	29.60
40	SAGBEND	-54.92	-21.81	23.51	155.87	0.000	0.000	236.50	69.92	21.54	108.25	130.98	36.38
41	SAGBEND	-60.49	-24.17	22.35	161.92	0.000	0.000	234.11	79.20	21.17	122.62	145.11	40.31
42	SAGBEND	-66.11	-26.41	21.08	167.97	0.000	0.000	231.85	84.92	20.83	131.47	153.74	42.71
43	SAGBEND	-71.78	-28.52	19.73	174.02	0.000	0.000	229.73	88.71	20.50	137.33	159.40	44.28
44	SAGBEND	-77.50	-30.49	18.33	180.07	0.000	0.000	227.75	91.42	20.20	141.53	163.40	45.39
45	SAGBEND	-83.27	-32.32	16.89	186.12	0.000	0.000	225.91	93.50	19.92	144.76	166.45	46.24
46	SAGBEND	-89.08	-34.01	15.43	192.17	0.000	0.000	224.22	95.19	19.66	147.37	168.90	46.92
47	SAGBEND	-94.93	-35.54	13.94	198.22	0.000	0.000	222.68	96.58	19.43	149.53	170.91	47.47
48	SAGBEND	-100.82	-36.92	12.44	204.27	0.000	0.000	221.30	97.71	19.22	151.27	172.52	47.92
49	SAGBEND	-106.75	-38.15	10.91	210.32	0.000	0.000	220.07	98.54	19.03	152.55	173.68	48.24
50	SAGBEND	-112.70	-39.21	9.38	216.37	0.000	0.000	219.01	98.98	18.87	153.23	174.26	48.40
51	SAGBEND	-118.68	-40.12	7.85	222.42	0.000	0.000	218.10	98.83	18.73	153.00	173.94	48.32
52	SAGBEND	-124.69	-40.86	6.32	228.47	0.000	0.000	217.36	97.74	18.61	151.32	172.18	47.83
53	SAGBEND	-130.71	-41.45	4.82	234.52	0.000	0.000	216.79	95.06	18.53	147.17	167.98	46.66
54	SAGBEND	-136.74	-41.88	3.39	240.57	0.000	0.000	216.38	89.63	18.46	138.76	159.53	44.31
55	SAGBEND	-142.79	-42.17	2.07	246.62	0.000	0.000	216.13	79.32	18.42	122.80	143.56	39.88
56	SAGBEND	-148.83	-42.33	0.97	252.67	0.576	0.000	216.03	60.31	18.40	93.37	114.13	31.70
57	SEABED	-154.88	-42.39	0.26	258.72	5.710	0.000	216.05	30.00	18.40	46.44	67.25	18.68
58	SEABED	-160.93	-42.40	-0.01	264.77	7.819	0.000	216.07	7.90	18.40	12.23	33.17	9.21
59	SEABED	-166.98	-42.39	-0.05	270.82	7.216	0.000	216.07	-0.48	18.40	-0.74	21.80	6.06

S T A T I C P I P E C O O R D I N A T E S, F O R C E S A N D S T R E S S E S

NODE	PIPE	X	Y	VERT	PIPE	SUPPORT	SEPARA	AXIAL	BENDING	TENSILE	BENDING	TOTAL	PERCNT

NO.	SECTION	COORD (M)	COORD (M)	ANGLE (DEG)	LENGTH (M)	REACTION (KN)	-TION (M)	TENSION (KN)	MOMENT (KN-M)	STRESS (MPA)	STRESS (MPA)	STRESS (MPA)	YIELD (PCT)
60	SEABED	-173.03	-42.39	-0.03	276.87	6.456	0.000	216.07	-1.73	18.40	-2.67	23.70	6.58
61	SEABED	-179.08	-42.39	-0.01	282.92	6.089	0.000	216.07	-0.99	18.40	-1.54	22.58	6.27
62	SEABED	-185.13	-42.39	0.00	288.97	5.998	0.000	216.07	-0.31	18.40	-0.48	21.54	5.98
63	SEABED	-191.18	-42.39	0.00	295.02	6.006	0.000	216.07	-0.01	18.40	-0.02	21.09	5.86
64	SEABED	-197.23	-42.39	0.00	301.07	6.028	0.000	216.07	0.05	18.40	0.07	21.14	5.87
65	SEABED	-203.28	-42.39	0.00	307.12	6.041	0.000	216.07	0.03	18.40	0.05	21.12	5.87
66	SEABED	-209.33	-42.39	0.00	313.17	6.044	0.000	216.07	0.01	18.40	0.02	21.09	5.86
67	SEABED	-215.38	-42.39	0.00	319.22	6.044	0.000	216.07	0.00	18.40	0.00	21.07	5.85
68	SEABED	-221.43	-42.39	0.00	325.27	6.044	0.000	216.07	0.00	18.40	0.00	21.07	5.85
69	SEABED	-227.48	-42.39	0.00	331.32	6.043	0.000	216.07	0.00	18.40	0.00	21.07	5.85
70	SEABED	-233.53	-42.39	0.00	337.37	6.043	0.000	216.07	0.00	18.40	0.00	21.07	5.85
71	SEABED	-239.58	-42.39	0.00	343.42	6.043	0.000	216.07	0.00	18.40	0.00	21.07	5.85
72	SEABED	-245.63	-42.39	0.00	349.47	0.000	0.000	216.07	0.00	18.40	0.00	21.07	5.85

S T A T I C P I P E C O O R D I N A T E S, F O R C E S A N D S T R E S S E S

NO.	SECTION	COORD (M)	COORD (M)	ANGLE (DEG)	LENGTH (M)	REACTION (KN)	-TION (M)	TENSION (KN)	MOMENT (KN-M)	STRESS (MPA)	STRESS (MPA)	STRESS (MPA)	YIELD (PCT)
1	LAYBARGE	96.31	6.41	1.69	0.00	0.655	0.000	0.00	0.00	0.00	0.00	0.00	0.00
3	LAYBARGE	84.28	6.05	1.70	12.04	1.244	0.000	-0.04	0.00	0.00	0.00	0.00	0.00
5	LAYBARGE	73.45	5.73	1.89	22.87	1.315	0.000	-0.08	0.00	0.00	0.00	0.00	0.00
7	TENSIONR	60.11	5.24	2.20	36.23	1.774	0.000	239.18	0.00	0.00	0.00	0.00	0.00
9	LAYBARGE	51.10	4.88	2.25	45.24	0.000	0.000	239.14	0.00	0.00	0.00	0.00	0.00
10	LAYBARGE	46.45	4.70	2.10	49.89	0.176	0.000	239.12	0.00	0.00	0.00	0.00	0.00
12	LAYBARGE	38.36	4.41	1.97	57.99	0.000	0.000	239.09	0.00	0.00	0.00	0.00	0.00
13	LAYBARGE	35.36	4.31	2.61	60.99	6.661	0.000	239.06	0.00	0.00	0.00	0.00	0.00
15	LAYBARGE	26.35	3.79	3.25	70.02	0.000	0.000	239.03	0.00	0.00	0.00	0.00	0.00
16	LAYBARGE	23.33	3.62	5.29	73.04	18.379	0.000	238.84	0.00	0.00	0.00	0.00	0.00
18	LAYBARGE	11.93	2.14	7.30	84.54	0.000	0.000	238.86	0.00	0.00	0.00	0.00	0.00
19	LAYBARGE	8.89	1.76	9.19	87.60	16.841	0.000	238.67	0.00	0.00	0.00	0.00	0.00
21	LAYBARGE	6.13	1.21	11.14	90.42	0.000	0.000	238.76	0.00	0.00	0.00	0.00	0.00
22	LAYBARGE	3.11	0.62	12.83	93.49	15.084	0.000	238.59	0.00	0.00	0.00	0.00	0.00
24	LAYBARGE	-6.68	-1.92	14.50	103.61	0.000	0.000	238.46	0.00	0.00	0.00	0.00	0.00
27	STINGER	-7.55	-2.15	15.88	104.50	12.449	0.000	238.36	0.00	0.00	0.00	0.00	0.00
29	STINGER	-16.28	-4.87	19.21	113.65	16.564	0.000	238.05	0.00	0.00	0.00	0.00	0.00
32	STINGER	-25.52	-8.44	24.59	123.57	14.008	0.000	237.39	0.00	22.38	0.00	22.85	6.35
34	STINGER	-35.45	-13.02	25.27	134.50	29.834	0.000	232.70	-71.29	21.67	-110.36	132.74	36.87
36	STINGER	-38.16	-14.31	25.65	137.50	0.000	0.413	231.51	-29.54	21.48	-45.73	67.99	18.89
38	SAGBEND	-43.81	-17.03	25.62	143.77	0.000	0.000	228.79	26.53	21.07	41.08	63.08	17.52
39	SAGBEND	-49.28	-19.62	24.96	149.82	0.000	0.000	226.15	56.18	20.66	86.97	108.71	30.20
40	SAGBEND	-54.78	-22.12	23.95	155.87	0.000	0.000	223.60	73.07	20.28	113.13	134.62	37.39
41	SAGBEND	-60.34	-24.52	22.73	161.92	0.000	0.000	221.17	83.10	19.91	128.65	149.90	41.64
42	SAGBEND	-65.95	-26.79	21.39	167.97	0.000	0.000	218.88	89.39	19.56	138.38	159.41	44.28
43	SAGBEND	-71.61	-28.93	19.97	174.02	0.000	0.000	216.72	93.61	19.23	144.92	165.73	46.04
44	SAGBEND	-77.32	-30.92	18.49	180.07	0.000	0.000	214.72	96.66	18.92	149.64	170.26	47.29
45	SAGBEND	-83.08	-32.77	16.97	186.12	0.000	0.000	212.87	99.00	18.64	153.27	173.71	48.25
46	SAGBEND	-88.89	-34.45	15.42	192.17	0.000	0.000	211.18	100.89	18.38	156.19	176.46	49.02
47	SAGBEND	-94.74	-35.98	13.84	198.22	0.000	0.000	209.64	102.41	18.15	158.54	178.66	49.63
48	SAGBEND	-100.64	-37.35	12.25	204.27	0.000	0.000	208.27	103.58	17.94	160.36	180.34	50.10
49	SAGBEND	-106.57	-38.55	10.63	210.32	0.000	0.000	207.07	104.34	17.75	161.54	181.41	50.39
50	SAGBEND	-112.53	-39.58	9.01	216.37	0.000	0.000	206.04	104.55	17.60	161.86	181.63	50.45
51	SAGBEND	-118.52	-40.44	7.39	222.42	0.000	0.000	205.18	103.91	17.46	160.86	180.55	50.15
52	SAGBEND	-124.53	-41.14	5.80	228.47	0.000	0.000	204.49	101.89	17.36	157.74	177.36	49.27
53	SAGBEND	-130.55	-41.67	4.25	234.52	0.000	0.000	203.99	97.56	17.28	151.04	170.62	47.39
54	SAGBEND	-136.59	-42.04	2.79	240.57	0.000	0.000	203.65	89.26	17.23	138.19	157.74	43.82
55	SAGBEND	-142.64	-42.26	1.51	246.62	0.013	0.000	203.48	74.03	17.20	114.61	134.15	37.26
56	SEABED	-148.69	-42.37	0.56	252.67	3.003	0.000	203.45	46.82	17.19	72.48	92.04	25.57
57	SEABED	-154.74	-42.40	0.08	258.72	7.572	0.000	203.49	17.04	17.19	26.38	46.04	12.79
58	SEABED	-160.79	-42.40	-0.05	264.77	7.705	0.000	203.50	2.14	17.19	3.32	23.14	6.43
59	SEABED	-166.84	-42.39	-0.05	270.82	6.804	0.000	203.50	-1.76	17.19	-2.72	22.56	6.27

S T A T I C P I P E C O O R D I N A T E S, F O R C E S A N D S T R E S S E S

NODE	PIPE	X	Y	VERT	PIPE	SUPPORT	SEPARA	AXIAL	BENDING	TENSILE	BENDING	TOTAL	PERCNT

NO.	SECTION	COORD (M)	COORD (M)	ANGLE (DEG)	LENGTH (M)	REACTION (KN)	-TION (M)	TENSION (KN)	MOMENT (KN-M)	STRESS (MPA)	STRESS (MPA)	STRESS (MPA)	YIELD (PCT)
60	SEABED	-172.89	-42.39	-0.02	276.87	6.217	0.000	203.50	-1.49	17.19	-2.30	22.15	6.15
61	SEABED	-178.94	-42.39	0.00	282.92	6.014	0.000	203.50	-0.61	17.19	-0.95	20.81	5.78
62	SEABED	-184.99	-42.39	0.00	288.97	5.993	0.000	203.50	-0.11	17.19	-0.17	20.05	5.57
63	SEABED	-191.04	-42.39	0.00	295.02	6.017	0.000	203.50	0.04	17.19	0.06	19.95	5.54
64	SEABED	-197.09	-42.39	0.00	301.07	6.036	0.000	203.50	0.05	17.19	0.07	19.95	5.54
65	SEABED	-203.14	-42.39	0.00	307.12	6.044	0.000	203.50	0.02	17.19	0.03	19.91	5.53
66	SEABED	-209.19	-42.39	0.00	313.17	6.045	0.000	203.50	0.00	17.19	0.01	19.89	5.52
67	SEABED	-215.24	-42.39	0.00	319.22	6.044	0.000	203.50	0.00	17.19	0.00	19.88	5.52
68	SEABED	-221.29	-42.39	0.00	325.27	6.044	0.000	203.50	0.00	17.19	0.00	19.88	5.52
69	SEABED	-227.34	-42.39	0.00	331.32	6.043	0.000	203.50	0.00	17.19	0.00	19.88	5.52
70	SEABED	-233.39	-42.39	0.00	337.37	6.043	0.000	203.50	0.00	17.19	0.00	19.88	5.52
71	SEABED	-239.44	-42.39	0.00	343.42	6.043	0.000	203.50	0.00	17.19	0.00	19.88	5.52
72	SEABED	-245.49	-42.39	0.00	349.47	0.000	0.000	203.50	0.00	17.19	0.00	19.88	5.52

S T A T I C P I P E C O O R D I N A T E S, F O R C E S A N D S T R E S S E S

NODE NO.	PIPE SECTION	X COORD (M)	Y COORD (M)	VERT ANGLE (DEG)	PIPE LENGTH (M)	SUPPORT REACTION (KN)	SEPARA -TION (M)	AXIAL TENSION (KN)	BENDING MOMENT (KN-M)	TENSILE STRESS (MPA)	BENDING STRESS (MPA)	TOTAL STRESS (MPA)	PERCNT YIELD (PCT)
1	LAYBARGE	96.31	6.41	1.69	0.00	0.655	0.000	0.00	0.00	0.00	0.00	0.00	0.00
3	LAYBARGE	84.28	6.05	1.70	12.04	1.244	0.000	-0.04	0.00	0.00	0.00	0.00	0.00
5	LAYBARGE	73.45	5.73	1.89	22.87	1.315	0.000	-0.08	0.00	0.00	0.00	0.00	0.00
7	TENSIONR	60.11	5.24	2.20	36.23	1.774	0.000	239.17	0.00	0.00	0.00	0.00	0.00
9	LAYBARGE	51.10	4.88	2.25	45.24	0.000	0.000	239.13	0.00	0.00	0.00	0.00	0.00
10	LAYBARGE	46.45	4.70	2.10	49.89	0.176	0.000	239.12	0.00	0.00	0.00	0.00	0.00
12	LAYBARGE	38.36	4.41	1.97	57.99	0.000	0.000	239.08	0.00	0.00	0.00	0.00	0.00
13	LAYBARGE	35.36	4.31	2.61	60.99	6.661	0.000	239.05	0.00	0.00	0.00	0.00	0.00
15	LAYBARGE	26.35	3.79	3.25	70.02	0.000	0.000	239.02	0.00	0.00	0.00	0.00	0.00
16	LAYBARGE	23.33	3.62	5.29	73.04	18.378	0.000	238.83	0.00	0.00	0.00	0.00	0.00
18	LAYBARGE	11.93	2.14	7.30	84.54	0.000	0.000	238.86	0.00	0.00	0.00	0.00	0.00
19	LAYBARGE	8.89	1.76	9.19	87.60	16.838	0.000	238.67	0.00	0.00	0.00	0.00	0.00
21	LAYBARGE	6.13	1.21	11.13	90.42	0.000	0.000	238.76	0.00	0.00	0.00	0.00	0.00
22	LAYBARGE	3.12	0.62	12.21	93.49	9.958	0.000	238.65	0.00	0.00	0.00	0.00	0.00
24	LAYBARGE	-6.74	-1.71	13.27	103.61	0.000	0.000	238.47	0.00	0.00	0.00	0.00	0.00
27	STINGER	-7.57	-1.91	14.06	104.47	7.578	0.000	238.43	0.00	0.00	0.00	0.00	0.00
29	STINGER	-16.41	-4.26	16.85	113.61	16.962	0.000	238.09	0.00	0.00	0.00	0.00	0.00
32	STINGER	-25.77	-7.45	20.66	123.50	16.474	0.000	237.79	0.00	0.00	0.00	0.00	0.00
34	STINGER	-35.86	-11.64	27.44	134.44	29.614	0.000	236.63	0.00	22.13	0.00	22.78	6.33
36	STINGER	-38.55	-13.03	27.35	137.47	0.000	0.195	235.23	23.06	21.91	35.70	58.32	16.20
38	SAGBEND	-44.16	-15.90	26.70	143.77	0.000	0.000	232.31	53.78	21.47	83.26	105.60	29.33
39	SAGBEND	-49.59	-18.57	25.73	149.82	0.000	0.000	229.59	70.26	21.05	108.78	130.85	36.35
40	SAGBEND	-55.07	-21.15	24.56	155.87	0.000	0.000	226.99	80.01	20.66	123.87	145.69	40.47
41	SAGBEND	-60.60	-23.60	23.27	161.92	0.000	0.000	224.52	86.14	20.28	133.36	154.93	43.04
42	SAGBEND	-66.18	-25.92	21.90	167.97	0.000	0.000	222.18	90.29	19.92	139.79	161.13	44.76
43	SAGBEND	-71.82	-28.11	20.47	174.02	0.000	0.000	219.98	93.34	19.59	144.51	165.64	46.01
44	SAGBEND	-77.52	-30.15	19.00	180.07	0.000	0.000	217.93	95.75	19.28	148.23	169.16	46.99
45	SAGBEND	-83.26	-32.05	17.50	186.12	0.000	0.000	216.03	97.75	18.99	151.33	172.08	47.80
46	SAGBEND	-89.06	-33.79	15.97	192.17	0.000	0.000	214.28	99.46	18.72	153.98	174.55	48.49
47	SAGBEND	-94.89	-35.38	14.42	198.22	0.000	0.000	212.69	100.92	18.47	156.25	176.66	49.07
48	SAGBEND	-100.77	-36.80	12.84	204.27	0.000	0.000	211.26	102.13	18.26	158.11	178.38	49.55
49	SAGBEND	-106.69	-38.07	11.25	210.32	0.000	0.000	209.99	103.01	18.06	159.47	179.63	49.90
50	SAGBEND	-112.64	-39.16	9.65	216.37	0.000	0.000	208.90	103.45	17.89	160.16	180.21	50.06
51	SAGBEND	-118.62	-40.09	8.05	222.42	0.000	0.000	207.97	103.23	17.75	159.81	179.77	49.94
52	SAGBEND	-124.62	-40.86	6.46	228.47	0.000	0.000	207.21	101.94	17.64	157.82	177.70	49.36
53	SAGBEND	-130.64	-41.46	4.89	234.52	0.000	0.000	206.63	98.87	17.55	153.06	172.89	48.02
54	SAGBEND	-136.67	-41.89	3.40	240.57	0.000	0.000	206.22	92.74	17.48	143.58	163.37	45.38
55	SAGBEND	-142.72	-42.18	2.05	246.62	0.000	0.000	205.98	81.30	17.44	125.87	145.64	40.46
56	SAGBEND	-148.76	-42.33	0.93	252.67	0.791	0.000	205.89	60.49	17.43	93.66	113.44	31.51
57	SEABED	-154.81	-42.39	0.23	258.72	6.148	0.000	205.92	28.79	17.43	44.58	64.41	17.89
58	SEABED	-160.86	-42.40	-0.02	264.77	7.918	0.000	205.94	7.03	17.43	10.89	30.86	8.57
59	SEABED	-166.91	-42.39	-0.06	270.82	7.197	0.000	205.94	-0.83	17.43	-1.29	21.37	5.94

S T A T I C P I P E C O O R D I N A T E S, F O R C E S A N D S T R E S S E S

NODE	PIPE	X	Y	VERT	PIPE	SUPPORT	SEPARA	AXIAL	BENDING	TENSILE	BENDING	TOTAL	PERCNT

NO.	SECTION	COORD (M)	COORD (M)	ANGLE (DEG)	LENGTH (M)	REACTION (KN)	-TION (M)	TENSION (KN)	MOMENT (KN-M)	STRESS (MPA)	STRESS (MPA)	STRESS (MPA)	YIELD (PCT)
60	SEABED	-172.96	-42.39	-0.03	276.87	6.424	0.000	205.93	-1.80	17.43	-2.78	22.85	6.35
61	SEABED	-179.01	-42.39	-0.01	282.92	6.072	0.000	205.93	-0.97	17.43	-1.51	21.59	6.00
62	SEABED	-185.06	-42.39	0.00	288.97	5.992	0.000	205.93	-0.28	17.43	-0.44	20.54	5.71
63	SEABED	-191.11	-42.39	0.00	295.02	6.006	0.000	205.93	0.00	17.43	0.00	20.11	5.59
64	SEABED	-197.16	-42.39	0.00	301.07	6.029	0.000	205.93	0.05	17.43	0.08	20.19	5.61
65	SEABED	-203.21	-42.39	0.00	307.12	6.041	0.000	205.93	0.03	17.43	0.05	20.16	5.60
66	SEABED	-209.26	-42.39	0.00	313.17	6.045	0.000	205.93	0.01	17.43	0.02	20.13	5.59
67	SEABED	-215.31	-42.39	0.00	319.22	6.045	0.000	205.93	0.00	17.43	0.00	20.11	5.59
68	SEABED	-221.36	-42.39	0.00	325.27	6.044	0.000	205.93	0.00	17.43	0.00	20.11	5.59
69	SEABED	-227.41	-42.39	0.00	331.32	6.043	0.000	205.93	0.00	17.43	0.00	20.11	5.59
70	SEABED	-233.46	-42.39	0.00	337.37	6.043	0.000	205.93	0.00	17.43	0.00	20.11	5.59
71	SEABED	-239.51	-42.39	0.00	343.42	6.043	0.000	205.93	0.00	17.43	0.00	20.11	5.59
72	SEABED	-245.56	-42.39	0.00	349.47	0.000	0.000	205.93	0.00	17.43	0.00	20.11	5.59

S T A T I C P I P E C O O R D I N A T E S, F O R C E S A N D S T R E S S E S

NODE NO.	PIPE SECTION	X COORD (M)	Y COORD (M)	VERT ANGLE (DEG)	PIPE LENGTH (M)	SUPPORT REACTION (KN)	SEPARA -TION (M)	AXIAL TENSION (KN)	BENDING MOMENT (KN-M)	TENSILE STRESS (MPA)	BENDING STRESS (MPA)	TOTAL STRESS (MPA)	PERCNT YIELD (PCT)
1	LAYBARGE	96.31	6.41	1.69	0.00	0.655	0.000	0.00	0.00	0.00	0.00	0.00	0.00
3	LAYBARGE	84.28	6.05	1.70	12.04	1.244	0.000	-0.04	0.00	0.00	0.00	0.00	0.00
5	LAYBARGE	73.45	5.73	1.89	22.87	1.315	0.000	-0.08	0.00	0.00	0.00	0.00	0.00
7	TENSIONR	60.11	5.24	2.21	36.23	1.752	0.000	226.57	0.00	0.00	0.00	0.00	0.00
9	LAYBARGE	51.10	4.88	2.25	45.24	0.000	0.000	226.53	0.00	0.00	0.00	0.00	0.00
10	LAYBARGE	46.45	4.70	2.10	49.89	0.238	0.000	226.52	0.00	0.00	0.00	0.00	0.00
12	LAYBARGE	38.36	4.41	1.96	57.99	0.000	0.000	226.48	0.00	0.00	0.00	0.00	0.00
13	LAYBARGE	35.36	4.31	2.61	60.99	6.376	0.000	226.45	0.00	0.00	0.00	0.00	0.00
15	LAYBARGE	26.35	3.79	3.25	70.02	0.000	0.000	226.42	0.00	0.00	0.00	0.00	0.00
16	LAYBARGE	23.33	3.62	5.28	73.04	17.485	0.000	226.24	0.00	0.00	0.00	0.00	0.00
18	LAYBARGE	11.93	2.14	7.30	84.54	0.000	0.000	226.26	0.00	0.00	0.00	0.00	0.00
19	LAYBARGE	8.89	1.76	9.19	87.60	16.008	0.000	226.08	0.00	0.00	0.00	0.00	0.00
21	LAYBARGE	6.13	1.21	11.13	90.42	0.000	0.000	226.16	0.00	0.00	0.00	0.00	0.00
22	LAYBARGE	3.12	0.62	12.19	93.49	9.265	0.000	226.05	0.00	0.00	0.00	0.00	0.00
24	LAYBARGE	-6.74	-1.70	13.21	103.61	0.000	0.000	225.87	0.00	0.00	0.00	0.00	0.00
27	STINGER	-7.57	-1.90	13.98	104.47	7.029	0.000	225.83	0.00	0.00	0.00	0.00	0.00
29	STINGER	-16.41	-4.24	16.89	113.61	17.215	0.000	225.48	0.00	0.00	0.00	0.00	0.00
32	STINGER	-25.77	-7.45	20.97	123.51	16.689	0.000	225.18	0.00	0.00	0.00	0.00	0.00
34	STINGER	-35.83	-11.72	28.08	134.45	29.496	0.000	224.00	0.00	20.90	0.00	21.57	5.99
36	STINGER	-38.50	-13.14	27.98	137.48	0.000	0.185	222.57	23.73	20.69	36.73	58.14	16.15
38	SAGBEND	-44.08	-16.07	27.31	143.77	0.000	0.000	219.59	55.75	20.23	86.32	107.43	29.84
39	SAGBEND	-49.48	-18.80	26.30	149.82	0.000	0.000	216.81	73.30	19.81	113.48	134.32	37.31
40	SAGBEND	-54.93	-21.42	25.07	155.87	0.000	0.000	214.15	83.88	19.41	129.87	150.44	41.79
41	SAGBEND	-60.44	-23.92	23.72	161.92	0.000	0.000	211.63	90.66	19.02	140.35	160.68	44.63
42	SAGBEND	-66.01	-26.29	22.27	167.97	0.000	0.000	209.25	95.31	18.66	147.56	167.66	46.57
43	SAGBEND	-71.64	-28.51	20.77	174.02	0.000	0.000	207.02	98.77	18.32	152.91	172.79	48.00
44	SAGBEND	-77.32	-30.58	19.21	180.07	0.000	0.000	204.94	101.50	18.00	157.14	176.82	49.12
45	SAGBEND	-83.06	-32.49	17.62	186.12	0.000	0.000	203.02	103.77	17.71	160.65	180.14	50.04
46	SAGBEND	-88.85	-34.24	16.00	192.17	0.000	0.000	201.26	105.68	17.44	163.61	182.93	50.81
47	SAGBEND	-94.69	-35.82	14.34	198.22	0.000	0.000	199.67	107.27	17.20	166.08	185.24	51.46
48	SAGBEND	-100.57	-37.23	12.67	204.27	0.000	0.000	198.25	108.52	16.98	168.01	187.03	51.95
49	SAGBEND	-106.50	-38.47	10.98	210.32	0.000	0.000	197.01	109.32	16.79	169.25	188.15	52.26
50	SAGBEND	-112.45	-39.54	9.28	216.37	0.000	0.000	195.95	109.50	16.63	169.52	188.32	52.31
51	SAGBEND	-118.44	-40.42	7.59	222.42	0.000	0.000	195.06	108.70	16.49	168.29	187.00	51.95
52	SAGBEND	-124.44	-41.14	5.92	228.47	0.000	0.000	194.37	106.36	16.38	164.66	183.31	50.92
53	SAGBEND	-130.47	-41.67	4.30	234.52	0.000	0.000	193.85	101.44	16.30	157.05	175.65	48.79
54	SAGBEND	-136.51	-42.05	2.79	240.57	0.000	0.000	193.52	92.17	16.25	142.69	161.26	44.80
55	SAGBEND	-142.55	-42.27	1.48	246.62	0.031	0.000	193.36	75.40	16.22	116.73	135.29	37.58
56	SEABED	-148.60	-42.37	0.52	252.67	3.482	0.000	193.34	46.06	16.22	71.30	89.90	24.97
57	SEABED	-154.65	-42.40	0.06	258.72	7.807	0.000	193.38	15.96	16.22	24.71	43.40	12.06
58	SEABED	-160.70	-42.40	-0.06	264.77	7.725	0.000	193.39	1.56	16.22	2.42	21.30	5.92
59	SEABED	-166.75	-42.39	-0.05	270.82	6.773	0.000	193.39	-1.94	16.22	-3.00	21.87	6.08

S T A T I C P I P E C O O R D I N A T E S, F O R C E S A N D S T R E S S E S

NODE	PIPE	X	Y	VERT	PIPE	SUPPORT	SEPARA	AXIAL	BENDING	TENSILE	BENDING	TOTAL	PERCNT

NO.	SECTION	COORD (M)	COORD (M)	ANGLE (DEG)	LENGTH (M)	REACTION (KN)	-TION (M)	TENSION (KN)	MOMENT (KN-M)	STRESS (MPA)	STRESS (MPA)	STRESS (MPA)	YIELD (PCT)
60	SEABED	-172.80	-42.39	-0.02	276.87	6.192	0.000	193.39	-1.50	16.22	-2.32	21.20	5.89
61	SEABED	-178.85	-42.39	0.00	282.92	6.003	0.000	193.39	-0.58	16.22	-0.90	19.81	5.50
62	SEABED	-184.90	-42.39	0.00	288.97	5.991	0.000	193.39	-0.09	16.22	-0.14	19.07	5.30
63	SEABED	-190.95	-42.39	0.00	295.02	6.018	0.000	193.39	0.05	16.22	0.08	19.01	5.28
64	SEABED	-197.00	-42.39	0.00	301.07	6.037	0.000	193.39	0.05	16.22	0.07	19.00	5.28
65	SEABED	-203.05	-42.39	0.00	307.12	6.044	0.000	193.39	0.02	16.22	0.03	18.96	5.27
66	SEABED	-209.10	-42.39	0.00	313.17	6.045	0.000	193.39	0.00	16.22	0.01	18.94	5.26
67	SEABED	-215.15	-42.39	0.00	319.22	6.044	0.000	193.39	0.00	16.22	0.00	18.93	5.26
68	SEABED	-221.20	-42.39	0.00	325.27	6.044	0.000	193.39	0.00	16.22	0.00	18.93	5.26
69	SEABED	-227.25	-42.39	0.00	331.32	6.043	0.000	193.39	0.00	16.22	0.00	18.93	5.26
70	SEABED	-233.30	-42.39	0.00	337.37	6.043	0.000	193.39	0.00	16.22	0.00	18.93	5.26
71	SEABED	-239.35	-42.39	0.00	343.42	0.000	0.000	193.39	0.00	16.22	0.00	18.93	5.26

S T A T I C P I P E C O O R D I N A T E S, F O R C E S A N D S T R E S S E S

NODE NO.	PIPE SECTION	X COORD (M)	Y COORD (M)	VERT ANGLE (DEG)	PIPE LENGTH (M)	SUPPORT REACTION (KN)	SEPARA -TION (M)	AXIAL TENSION (KN)	BENDING MOMENT (KN-M)	TENSILE STRESS (MPA)	BENDING STRESS (MPA)	TOTAL STRESS (MPA)	PERCNT YIELD (PCT)
1	LAYBARGE	96.31	6.41	1.69	0.00	0.655	0.000	0.00	0.00	0.00	0.00	0.00	0.00
3	LAYBARGE	84.28	6.05	1.70	12.04	1.244	0.000	-0.04	0.00	0.00	0.00	0.00	0.00
5	LAYBARGE	73.45	5.73	1.89	22.87	1.315	0.000	-0.08	0.00	0.00	0.00	0.00	0.00
7	TENSIONR	60.11	5.24	2.21	36.23	1.752	0.000	226.57	0.00	0.00	0.00	0.00	0.00
9	LAYBARGE	51.10	4.88	2.25	45.24	0.000	0.000	226.53	0.00	0.00	0.00	0.00	0.00
10	LAYBARGE	46.45	4.70	2.10	49.89	0.238	0.000	226.52	0.00	0.00	0.00	0.00	0.00
12	LAYBARGE	38.36	4.41	1.96	57.99	0.000	0.000	226.48	0.00	0.00	0.00	0.00	0.00
13	LAYBARGE	35.36	4.31	2.61	60.99	6.376	0.000	226.45	0.00	0.00	0.00	0.00	0.00
15	LAYBARGE	26.35	3.79	3.25	70.02	0.000	0.000	226.42	0.00	0.00	0.00	0.00	0.00
16	LAYBARGE	23.33	3.62	5.28	73.04	17.486	0.000	226.24	0.00	0.00	0.00	0.00	0.00
18	LAYBARGE	11.93	2.14	7.30	84.54	0.000	0.000	226.26	0.00	0.00	0.00	0.00	0.00
19	LAYBARGE	8.89	1.76	9.19	87.60	16.010	0.000	226.08	0.00	0.00	0.00	0.00	0.00
21	LAYBARGE	6.13	1.21	11.14	90.42	0.000	0.000	226.16	0.00	0.00	0.00	0.00	0.00
22	LAYBARGE	3.11	0.62	11.87	93.49	6.779	0.000	226.07	0.00	0.00	0.00	0.00	0.00
24	LAYBARGE	-6.76	-1.60	12.58	103.61	0.000	0.000	225.88	0.00	0.00	0.00	0.00	0.00
27	STINGER	-7.55	-1.77	13.05	104.42	4.643	0.000	225.85	0.00	0.00	0.00	0.00	0.00
29	STINGER	-16.44	-3.92	15.73	113.56	17.829	0.000	225.49	0.00	0.00	0.00	0.00	0.00
32	STINGER	-25.90	-6.97	19.97	123.51	17.304	0.000	225.21	0.00	0.00	0.00	0.00	0.00
34	STINGER	-36.04	-11.08	25.71	134.45	29.321	0.000	224.50	0.00	0.00	0.00	0.00	0.00
36	STINGER	-38.67	-12.56	29.34	137.48	0.000	0.066	224.83	0.00	0.00	0.00	0.00	0.00
38	SAGBEND	-40.88	-13.80	26.96	140.01	0.000	0.000	224.53	0.00	20.84	0.00	21.62	6.01
39	SAGBEND	-44.23	-15.50	26.82	143.77	0.000	0.000	222.81	28.67	20.58	44.39	65.82	18.28
40	SAGBEND	-49.65	-18.20	26.12	149.82	0.000	0.000	220.06	57.89	20.16	89.62	110.77	30.77
41	SAGBEND	-55.10	-20.82	25.08	155.87	0.000	0.000	217.39	74.75	19.75	115.73	136.62	37.95
42	SAGBEND	-60.61	-23.32	23.84	161.92	0.000	0.000	214.85	84.91	19.37	131.46	152.10	42.25
43	SAGBEND	-66.17	-25.70	22.47	167.97	0.000	0.000	212.45	91.40	19.00	141.50	161.90	44.97
44	SAGBEND	-71.79	-27.95	21.01	174.02	0.000	0.000	210.19	95.84	18.66	148.37	168.56	46.82
45	SAGBEND	-77.47	-30.04	19.50	180.07	0.000	0.000	208.09	99.11	18.33	153.43	173.41	48.17
46	SAGBEND	-83.20	-31.98	17.94	186.12	0.000	0.000	206.13	101.66	18.04	157.39	177.18	49.22
47	SAGBEND	-88.98	-33.77	16.35	192.17	0.000	0.000	204.34	103.75	17.76	160.62	180.24	50.07
48	SAGBEND	-94.81	-35.39	14.73	198.22	0.000	0.000	202.72	105.47	17.51	163.28	182.74	50.76
49	SAGBEND	-100.68	-36.84	13.08	204.27	0.000	0.000	201.26	106.83	17.29	165.39	184.71	51.31
50	SAGBEND	-106.59	-38.12	11.41	210.32	0.000	0.000	199.97	107.79	17.09	166.87	186.06	51.68
51	SAGBEND	-112.54	-39.24	9.74	216.37	0.000	0.000	198.86	108.20	16.92	167.50	186.58	51.83
52	SAGBEND	-118.51	-40.17	8.06	222.42	0.000	0.000	197.93	107.79	16.78	166.87	185.86	51.63
53	SAGBEND	-124.52	-40.93	6.40	228.47	0.000	0.000	197.17	106.09	16.67	164.25	183.16	50.88
54	SAGBEND	-130.54	-41.52	4.78	234.52	0.000	0.000	196.60	102.27	16.58	158.33	177.19	49.22
55	SAGBEND	-136.57	-41.94	3.25	240.57	0.000	0.000	196.21	94.85	16.52	146.85	165.68	46.02
56	SAGBEND	-142.62	-42.21	1.87	246.62	0.000	0.000	196.00	81.26	16.48	125.80	144.61	40.17
57	SAGBEND	-148.66	-42.35	0.78	252.67	1.563	0.000	195.94	56.92	16.47	88.13	106.95	29.71
58	SEABED	-154.71	-42.39	0.16	258.72	7.006	0.000	195.98	24.18	16.47	37.43	56.33	15.65
59	SEABED	-160.76	-42.40	-0.04	264.77	7.951	0.000	195.99	4.73	16.47	7.32	26.38	7.33

S T A T I C P I P E C O O R D I N A T E S, F O R C E S A N D S T R E S S E S

NODE NO.	PIPE SECTION	X COORD (M)	Y COORD (M)	VERT ANGLE (DEG)	PIPE LENGTH (M)	SUPPORT REACTION (KN)	SEPARA -TION (M)	AXIAL TENSION (KN)	BENDING MOMENT (KN-M)	TENSILE STRESS (MPA)	BENDING STRESS (MPA)	TOTAL STRESS (MPA)	PERCNT YIELD (PCT)
60	SEABED	-166.81	-42.39	-0.06	270.82	7.060	0.000	195.99	-1.46	16.47	-2.25	21.39	5.94
61	SEABED	-172.86	-42.39	-0.03	276.87	6.331	0.000	195.99	-1.77	16.47	-2.74	21.87	6.07
62	SEABED	-178.91	-42.39	-0.01	282.92	6.038	0.000	195.99	-0.84	16.47	-1.30	20.45	5.68
63	SEABED	-184.96	-42.39	0.00	288.97	5.987	0.000	195.99	-0.20	16.47	-0.31	19.48	5.41
64	SEABED	-191.01	-42.39	0.00	295.02	6.009	0.000	195.99	0.03	16.47	0.04	19.22	5.34
65	SEABED	-197.06	-42.39	0.00	301.07	6.032	0.000	195.99	0.05	16.47	0.08	19.26	5.35
66	SEABED	-203.11	-42.39	0.00	307.12	6.043	0.000	195.99	0.03	16.47	0.04	19.22	5.34
67	SEABED	-209.16	-42.39	0.00	313.17	6.045	0.000	195.99	0.01	16.47	0.01	19.19	5.33
68	SEABED	-215.21	-42.39	0.00	319.22	6.044	0.000	195.99	0.00	16.47	0.00	19.17	5.33
69	SEABED	-221.26	-42.39	0.00	325.27	6.044	0.000	195.99	0.00	16.47	0.00	19.18	5.33
70	SEABED	-227.31	-42.39	0.00	331.32	6.043	0.000	195.99	0.00	16.47	0.00	19.18	5.33
71	SEABED	-233.36	-42.39	0.00	337.37	6.043	0.000	195.99	0.00	16.47	0.00	19.18	5.33
72	SEABED	-239.41	-42.39	0.00	343.42	6.043	0.000	195.99	0.00	16.47	0.00	19.17	5.33
73	SEABED	-245.46	-42.39	0.00	349.47	0.000	0.000	195.99	0.00	16.47	0.00	19.17	5.33

S T A T I C P I P E C O O R D I N A T E S, F O R C E S A N D S T R E S S E S

NODE NO.	PIPE SECTION	X COORD (M)	Y COORD (M)	VERT ANGLE (DEG)	PIPE LENGTH (M)	SUPPORT REACTION (KN)	SEPARA -TION (M)	AXIAL TENSION (KN)	BENDING MOMENT (KN-M)	TENSILE STRESS (MPA)	BENDING STRESS (MPA)	TOTAL STRESS (MPA)	PERCNT YIELD (PCT)
1	LAYBARGE	96.31	6.41	1.69	0.00	0.655	0.000	0.00	0.00	0.00	0.00	0.00	0.00
3	LAYBARGE	84.28	6.05	1.70	12.04	1.244	0.000	-0.04	0.00	0.00	0.00	0.00	0.00
5	LAYBARGE	73.45	5.73	1.89	22.87	1.315	0.000	-0.08	0.00	0.00	0.00	0.00	0.00
7	TENSIONR	60.11	5.24	2.22	36.23	1.615	0.000	150.97	0.00	0.00	0.00	0.00	0.00
9	LAYBARGE	51.10	4.87	2.23	45.24	0.000	0.000	150.93	0.00	0.00	0.00	0.00	0.00
10	LAYBARGE	46.45	4.70	2.08	49.89	0.608	0.000	150.92	0.00	0.00	0.00	0.00	0.00
12	LAYBARGE	38.36	4.41	1.95	57.99	0.000	0.000	150.88	0.00	0.00	0.00	0.00	0.00
13	LAYBARGE	35.36	4.31	2.59	60.99	4.667	0.000	150.86	0.00	0.00	0.00	0.00	0.00
15	LAYBARGE	26.35	3.79	3.23	70.02	0.000	0.000	150.82	0.00	0.00	0.00	0.00	0.00
16	LAYBARGE	23.33	3.62	5.26	73.04	12.128	0.000	150.69	0.00	0.00	0.00	0.00	0.00
18	LAYBARGE	11.93	2.14	7.27	84.54	0.000	0.000	150.66	0.00	0.00	0.00	0.00	0.00
19	LAYBARGE	8.89	1.76	9.16	87.60	11.026	0.000	150.52	0.00	0.00	0.00	0.00	0.00
21	LAYBARGE	6.13	1.21	11.14	90.42	0.000	0.000	150.56	0.00	0.00	0.00	0.00	0.00
22	LAYBARGE	3.12	0.62	11.06	93.48	0.566	0.000	150.50	0.00	0.00	0.00	0.00	0.00
24	LAYBARGE	-6.82	-1.32	10.94	103.61	0.000	0.000	150.30	0.00	0.00	0.00	0.00	0.00
27	STINGER	-7.54	-1.45	10.75	104.34	0.000	0.015	150.29	0.00	0.00	0.00	0.00	0.00
29	STINGER	-16.52	-3.15	14.55	113.49	21.212	0.000	149.76	0.00	0.00	0.00	0.00	0.00
32	STINGER	-26.02	-6.31	22.20	123.51	20.602	0.000	149.48	0.00	0.00	0.00	0.00	0.00
34	STINGER	-35.85	-11.10	30.24	134.45	22.838	0.000	148.93	0.00	0.00	0.00	0.00	0.00
36	STINGER	-38.34	-12.82	35.27	137.48	4.115	0.000	149.18	0.00	0.00	0.00	0.00	0.00
38	SAGBEND	-40.40	-14.31	31.74	140.02	0.000	0.000	148.65	0.00	13.50	0.00	14.34	3.98
39	SAGBEND	-43.60	-16.29	31.56	143.78	0.000	0.000	146.65	35.93	13.20	55.63	69.73	19.37
40	SAGBEND	-48.78	-19.42	30.67	149.83	0.000	0.000	143.42	76.46	12.71	118.37	132.14	36.71
41	SAGBEND	-54.02	-22.44	29.26	155.88	0.000	0.000	140.29	103.19	12.24	159.75	173.21	48.11
42	SAGBEND	-59.34	-25.32	27.51	161.93	0.000	0.000	137.32	121.55	11.79	188.17	201.34	55.93
43	SAGBEND	-64.75	-28.02	25.52	167.98	0.000	0.000	134.55	134.71	11.37	208.55	221.44	61.51
44	SAGBEND	-70.26	-30.53	23.35	174.03	0.000	0.000	131.98	144.48	10.98	223.68	236.33	65.65
45	SAGBEND	-75.86	-32.81	21.05	180.08	0.000	0.000	129.65	151.88	10.62	235.14	247.56	68.77
46	SAGBEND	-81.55	-34.87	18.65	186.13	0.000	0.000	127.56	157.38	10.31	243.65	255.86	71.07
47	SAGBEND	-87.32	-36.68	16.17	192.18	0.000	0.000	125.73	161.09	10.03	249.39	261.42	72.62
48	SAGBEND	-93.17	-38.23	13.66	198.23	0.000	0.000	124.16	162.83	9.79	252.08	263.96	73.32
49	SAGBEND	-99.07	-39.53	11.14	204.28	0.000	0.000	122.87	162.12	9.59	250.98	262.73	72.98
50	SAGBEND	-105.03	-40.57	8.65	210.33	0.000	0.000	121.86	158.11	9.43	244.78	256.43	71.23
51	SAGBEND	-111.03	-41.36	6.25	216.38	0.000	0.000	121.13	149.45	9.32	231.37	242.95	67.49
52	SAGBEND	-117.06	-41.90	4.05	222.43	0.000	0.000	120.69	133.99	9.25	207.44	218.99	60.83
53	SAGBEND	-123.10	-42.22	2.15	228.48	0.006	0.000	120.51	108.40	9.21	167.82	179.35	49.82
54	SEABED	-129.15	-42.37	0.76	234.53	3.295	0.000	120.52	67.54	9.20	104.56	116.12	32.26
55	SEABED	-135.20	-42.41	0.08	240.58	8.946	0.000	120.61	23.84	9.21	36.91	48.57	13.49
56	SEABED	-141.25	-42.40	-0.10	246.63	8.661	0.000	120.63	2.10	9.21	3.26	15.28	4.25
57	SEABED	-147.30	-42.39	-0.07	252.68	7.129	0.000	120.62	-3.20	9.21	-4.95	16.93	4.70
58	SEABED	-153.35	-42.39	-0.03	258.73	6.226	0.000	120.62	-2.40	9.21	-3.71	15.72	4.37
59	SEABED	-159.40	-42.39	0.00	264.78	5.952	0.000	120.62	-0.89	9.21	-1.38	13.48	3.74

S T A T I C P I P E C O O R D I N A T E S, F O R C E S A N D S T R E S S E S

NODE	PIPE	X	Y	VERT	PIPE	SUPPORT	SEPARA	AXIAL	BENDING	TENSILE	BENDING	TOTAL	PERCNT

NO.	SECTION	COORD (M)	COORD (M)	ANGLE (DEG)	LENGTH (M)	REACTION (KN)	-TION (M)	TENSION (KN)	MOMENT (KN-M)	STRESS (MPA)	STRESS (MPA)	STRESS (MPA)	YIELD (PCT)
60	SEABED	-165.45	-42.39	0.00	270.83	5.952	0.000	120.62	-0.10	9.21	-0.16	12.32	3.42
61	SEABED	-171.50	-42.39	0.00	276.88	6.004	0.000	120.62	0.10	9.21	0.16	12.32	3.42
62	SEABED	-177.55	-42.39	0.00	282.93	6.036	0.000	120.62	0.08	9.21	0.13	12.29	3.41
63	SEABED	-183.60	-42.39	0.00	288.98	6.046	0.000	120.62	0.03	9.21	0.05	12.22	3.39
64	SEABED	-189.65	-42.39	0.00	295.03	6.047	0.000	120.62	0.00	9.21	0.01	12.17	3.38
65	SEABED	-195.70	-42.39	0.00	301.08	6.045	0.000	120.62	0.00	9.21	-0.01	12.17	3.38
66	SEABED	-201.75	-42.39	0.00	307.13	6.044	0.000	120.62	0.00	9.21	0.00	12.17	3.38
67	SEABED	-207.80	-42.39	0.00	313.18	6.043	0.000	120.62	0.00	9.21	0.00	12.17	3.38
68	SEABED	-213.85	-42.39	0.00	319.23	6.043	0.000	120.62	0.00	9.21	0.00	12.17	3.38
69	SEABED	-219.90	-42.39	0.00	325.28	0.000	0.000	120.62	0.00	9.21	0.00	12.17	3.38

S T A T I C P I P E C O O R D I N A T E S, F O R C E S A N D S T R E S S E S

NODE NO.	PIPE SECTION	X COORD (M)	Y COORD (M)	VERT ANGLE (DEG)	PIPE LENGTH (M)	SUPPORT REACTION (KN)	SEPARA -TION (M)	AXIAL TENSION (KN)	BENDING MOMENT (KN-M)	TENSILE STRESS (MPA)	BENDING STRESS (MPA)	TOTAL STRESS (MPA)	PERCNT YIELD (PCT)
1	LAYBARGE	96.31	6.41	1.69	0.00	0.655	0.000	0.00	0.00	0.00	0.00	0.00	0.00
3	LAYBARGE	84.28	6.05	1.70	12.04	1.244	0.000	-0.04	0.00	0.00	0.00	0.00	0.00
5	LAYBARGE	73.45	5.73	1.89	22.87	1.315	0.000	-0.08	0.00	0.00	0.00	0.00	0.00
7	TENSIONR	60.11	5.24	2.22	36.23	1.615	0.000	150.97	0.00	0.00	0.00	0.00	0.00
9	LAYBARGE	51.10	4.87	2.23	45.24	0.000	0.000	150.93	0.00	0.00	0.00	0.00	0.00
10	LAYBARGE	46.45	4.70	2.08	49.89	0.608	0.000	150.92	0.00	0.00	0.00	0.00	0.00
12	LAYBARGE	38.36	4.41	1.95	57.99	0.000	0.000	150.88	0.00	0.00	0.00	0.00	0.00
13	LAYBARGE	35.36	4.31	2.59	60.99	4.665	0.000	150.86	0.00	0.00	0.00	0.00	0.00
15	LAYBARGE	26.35	3.79	3.23	70.02	0.000	0.000	150.82	0.00	0.00	0.00	0.00	0.00
16	LAYBARGE	23.33	3.62	4.43	73.04	7.769	0.000	150.76	0.00	0.00	0.00	0.00	0.00
18	LAYBARGE	11.89	2.47	5.61	84.54	0.000	0.000	150.69	0.00	0.00	0.00	0.00	0.00
19	LAYBARGE	8.84	2.18	5.40	87.60	0.000	0.422	150.66	0.00	0.00	0.00	0.00	0.00
21	LAYBARGE	6.03	1.91	5.28	90.42	0.000	0.000	150.63	0.00	0.00	0.00	0.00	0.00
22	LAYBARGE	3.02	1.64	5.08	93.45	0.000	1.022	150.60	0.00	0.00	0.00	0.00	0.00
24	LAYBARGE	-7.07	0.77	4.84	103.57	0.000	0.000	150.51	0.00	0.00	0.00	0.00	0.00
27	STINGER	-7.53	0.73	4.63	104.03	0.000	0.996	150.50	0.00	0.00	0.00	0.00	0.00
29	STINGER	-16.58	0.01	5.67	113.11	6.945	0.000	150.38	0.00	0.00	0.00	0.00	0.00
32	STINGER	-26.50	-1.18	10.89	123.11	22.333	0.000	149.90	0.00	0.00	0.00	0.00	0.00
34	STINGER	-37.06	-4.00	19.25	134.06	23.051	0.000	149.59	0.00	0.00	0.00	0.00	0.00
36	STINGER	-39.84	-5.21	24.32	137.09	4.541	0.000	149.89	0.00	0.00	0.00	0.00	0.00
38	SAGBEND	-45.90	-8.05	25.01	143.77	0.000	0.000	149.64	0.00	0.00	0.00	0.00	0.00
39	SAGBEND	-51.38	-10.59	24.80	149.82	0.000	0.000	149.40	0.00	0.00	0.00	0.00	0.00
40	SAGBEND	-56.88	-13.12	24.60	155.87	0.000	0.000	149.16	0.00	0.00	0.00	0.00	0.00
41	SAGBEND	-62.39	-15.63	24.40	161.92	0.000	0.000	148.92	0.00	0.00	0.00	0.00	0.00
42	SAGBEND	-67.90	-18.12	24.20	167.97	0.000	0.000	148.69	0.00	0.00	0.00	0.00	0.00
43	SAGBEND	-73.42	-20.59	24.00	174.02	0.000	0.000	148.45	0.00	0.00	0.00	0.00	0.00
44	SAGBEND	-78.95	-23.04	23.80	180.07	0.000	0.000	148.22	0.00	0.00	0.00	0.00	0.00
45	SAGBEND	-84.49	-25.47	23.60	186.12	0.000	0.000	147.99	0.00	0.00	0.00	0.00	0.00
46	SAGBEND	-90.04	-27.89	23.39	192.17	0.000	0.000	147.76	0.00	0.00	0.00	0.00	0.00
47	SAGBEND	-93.64	-29.44	23.26	196.09	0.000	0.000	147.62	0.00	0.00	0.00	0.00	0.00
48	SAGBEND	-97.25	-30.98	18.49	200.02	0.000	0.000	146.99	0.00	12.40	0.00	14.37	3.99
49	SAGBEND	-101.29	-32.33	18.24	204.27	0.000	0.000	145.60	43.12	12.19	66.75	80.74	22.43
50	SAGBEND	-107.05	-34.18	17.23	210.32	0.000	0.000	143.64	84.27	11.89	130.46	144.24	40.07
51	SAGBEND	-112.85	-35.89	15.71	216.37	0.000	0.000	141.81	110.01	11.62	170.31	183.90	51.08
52	SAGBEND	-118.70	-37.44	13.87	222.42	0.000	0.000	140.18	125.90	11.38	194.91	208.34	57.87
53	SAGBEND	-124.59	-38.79	11.84	228.47	0.000	0.000	138.78	135.07	11.17	209.10	222.40	61.78
54	SAGBEND	-130.54	-39.92	9.70	234.52	0.000	0.000	137.63	139.06	10.99	215.29	228.46	63.46
55	SAGBEND	-136.52	-40.83	7.55	240.57	0.000	0.000	136.73	138.28	10.85	214.08	227.17	63.10
56	SAGBEND	-142.53	-41.51	5.44	246.62	0.000	0.000	136.08	132.13	10.75	204.55	217.58	60.44
57	SAGBEND	-148.56	-41.98	3.48	252.67	0.000	0.000	135.69	118.91	10.69	184.09	197.08	54.74
58	SAGBEND	-154.60	-42.25	1.81	258.72	0.036	0.000	135.53	95.44	10.66	147.75	160.74	44.65
59	SEABED	-160.65	-42.38	0.60	264.77	4.013	0.000	135.54	56.83	10.65	87.97	100.99	28.05

S T A T I C P I P E C O O R D I N A T E S, F O R C E S A N D S T R E S S E S

NODE NO.	PIPE SECTION	X COORD (M)	Y COORD (M)	VERT ANGLE (DEG)	PIPE LENGTH (M)	SUPPORT REACTION (KN)	SEPARA -TION (M)	AXIAL TENSION (KN)	BENDING MOMENT (KN-M)	TENSILE STRESS (MPA)	BENDING STRESS (MPA)	TOTAL STRESS (MPA)	PERCNT YIELD (PCT)
60	SEABED	-166.70	-42.40	0.04	270.82	8.750	0.000	135.61	18.73	10.66	29.00	42.13	11.70
61	SEABED	-172.75	-42.40	-0.09	276.87	8.254	0.000	135.62	1.02	10.66	1.58	15.06	4.18
62	SEABED	-178.80	-42.39	-0.06	282.92	6.916	0.000	135.62	-2.88	10.66	-4.46	17.85	4.96
63	SEABED	-184.85	-42.39	-0.02	288.97	6.173	0.000	135.62	-1.99	10.66	-3.08	16.51	4.59
64	SEABED	-190.90	-42.39	0.00	295.02	5.960	0.000	135.62	-0.70	10.66	-1.09	14.58	4.05
65	SEABED	-196.95	-42.39	0.00	301.07	5.967	0.000	135.62	-0.06	10.66	-0.10	13.64	3.79
66	SEABED	-203.00	-42.39	0.00	307.12	6.012	0.000	135.62	0.09	10.66	0.14	13.68	3.80
67	SEABED	-209.05	-42.39	0.00	313.17	6.038	0.000	135.62	0.07	10.66	0.11	13.64	3.79
68	SEABED	-215.10	-42.39	0.00	319.22	6.046	0.000	135.62	0.03	10.66	0.04	13.58	3.77
69	SEABED	-221.15	-42.39	0.00	325.27	6.046	0.000	135.62	0.00	10.66	0.01	13.55	3.76
70	SEABED	-227.20	-42.39	0.00	331.32	6.045	0.000	135.62	0.00	10.66	0.00	13.54	3.76
71	SEABED	-233.25	-42.39	0.00	337.37	6.044	0.000	135.62	0.00	10.66	0.00	13.54	3.76
72	SEABED	-239.30	-42.39	0.00	343.42	6.043	0.000	135.62	0.00	10.66	0.00	13.54	3.76
73	SEABED	-245.35	-42.39	0.00	349.47	6.043	0.000	135.62	0.00	10.66	0.00	13.54	3.76
74	SEABED	-251.40	-42.39	0.00	355.52	6.043	0.000	135.62	0.00	10.66	0.00	13.54	3.76
75	SEABED	-257.45	-42.39	0.00	361.57	6.044	0.000	135.62	0.00	10.66	0.00	13.54	3.76
76	SEABED	-263.50	-42.39	0.00	367.62	6.044	0.000	135.62	0.00	10.66	0.00	13.54	3.76
77	SEABED	-269.55	-42.39	0.00	373.67	6.044	0.000	135.62	0.00	10.66	0.00	13.54	3.76
78	SEABED	-275.60	-42.39	0.00	379.72	6.044	0.000	135.62	0.00	10.66	0.00	13.54	3.76
79	SEABED	-281.65	-42.39	0.00	385.77	6.044	0.000	135.62	0.00	10.66	0.00	13.54	3.76
80	SEABED	-287.70	-42.39	0.00	391.82	6.044	0.000	135.62	0.00	10.66	0.00	13.54	3.76
81	SEABED	-293.75	-42.39	0.00	397.87	6.044	0.000	135.62	0.00	10.66	0.00	13.54	3.76
82	SEABED	-299.80	-42.39	0.00	403.92	6.044	0.000	135.62	0.00	10.66	0.00	13.54	3.76
83	SEABED	-305.85	-42.39	0.00	409.97	6.044	0.000	135.62	0.00	10.66	0.00	13.54	3.76
84	SEABED	-311.90	-42.39	0.00	416.02	6.044	0.000	135.62	0.00	10.66	0.00	13.54	3.76
85	SEABED	-317.95	-42.39	0.00	422.07	6.044	0.000	135.62	0.00	10.66	0.00	13.54	3.76
86	SEABED	-324.00	-42.39	0.00	428.12	6.044	0.000	135.62	0.00	10.66	0.00	13.54	3.76
87	SEABED	-330.05	-42.39	0.00	434.17	6.044	0.000	135.62	0.00	10.66	0.00	13.54	3.76
88	SEABED	-336.10	-42.39	0.00	440.22	6.044	0.000	135.62	0.00	10.66	0.00	13.54	3.76
89	SEABED	-342.15	-42.39	0.00	446.27	6.044	0.000	135.62	0.00	10.66	0.00	13.54	3.76
90	SEABED	-348.20	-42.39	0.00	452.32	6.044	0.000	135.62	0.00	10.66	0.00	13.54	3.76
91	SEABED	-354.25	-42.39	0.00	458.37	6.044	0.000	135.62	0.00	10.66	0.00	13.54	3.76
92	SEABED	-360.30	-42.39	0.00	464.42	6.044	0.000	135.62	0.00	10.66	0.00	13.54	3.76
93	SEABED	-366.35	-42.39	0.00	470.47	6.044	0.000	135.62	0.00	10.66	0.00	13.54	3.76
94	SEABED	-372.40	-42.39	0.00	476.52	6.044	0.000	135.62	0.00	10.66	0.00	13.54	3.76
95	SEABED	-378.45	-42.39	0.00	482.57	6.044	0.000	135.62	0.00	10.66	0.00	13.54	3.76
96	SEABED	-384.50	-42.39	0.00	488.62	6.044	0.000	135.62	0.00	10.66	0.00	13.54	3.76
97	SEABED	-390.55	-42.39	0.00	494.67	6.044	0.000	135.62	0.00	10.66	0.00	13.54	3.76
98	SEABED	-396.60	-42.39	0.00	500.72	6.044	0.000	135.62	0.00	10.66	0.00	13.54	3.76
99	SEABED	-402.65	-42.39	0.00	506.77	6.044	0.000	135.62	0.00	10.66	0.00	13.54	3.76
100	SEABED	-408.70	-42.39	0.00	512.82	6.044	0.000	135.62	0.00	10.66	0.00	13.54	3.76
101	SEABED	-414.75	-42.39	0.00	518.87	6.044	0.000	135.62	0.00	10.66	0.00	13.54	3.76
102	SEABED	-420.80	-42.39	0.00	524.92	6.044	0.000	135.62	0.00	10.66	0.00	13.54	3.76
103	SEABED	-426.85	-42.39	0.00	530.97	6.044	0.000	135.62	0.00	10.66	0.00	13.54	3.76
104	SEABED	-432.90	-42.39	0.00	537.02	6.044	0.000	135.62	0.00	10.66	0.00	13.54	3.76

S T A T I C P I P E C O O R D I N A T E S, F O R C E S A N D S T R E S S E S

NODE NO.	PIPE SECTION	X COORD (M)	Y COORD (M)	VERT ANGLE (DEG)	PIPE LENGTH (M)	SUPPORT REACTION (KN)	SEPARA -TION (M)	AXIAL TENSION (KN)	BENDING MOMENT (KN-M)	TENSILE STRESS (MPA)	BENDING STRESS (MPA)	TOTAL STRESS (MPA)	PERCNT YIELD (PCT)
105	SEABED	-438.95	-42.39	0.00	543.07	6.044	0.000	135.62	0.00	10.66	0.00	13.54	3.76
106	SEABED	-445.00	-42.39	0.00	549.12	6.044	0.000	135.62	0.00	10.66	0.00	13.54	3.76
107	SEABED	-451.05	-42.39	0.00	555.17	0.000	0.000	135.62	0.00	10.66	0.00	13.54	3.76

S T A T I C P I P E C O O R D I N A T E S, F O R C E S A N D S T R E S S E S

NODE NO.	PIPE SECTION	X COORD (M)	Y COORD (M)	VERT ANGLE (DEG)	PIPE LENGTH (M)	SUPPORT REACTION (KN)	SEPARA -TION (M)	AXIAL TENSION (KN)	BENDING MOMENT (KN-M)	TENSILE STRESS (MPA)	BENDING STRESS (MPA)	TOTAL STRESS (MPA)	PERCNT YIELD (PCT)
1	LAYBARGE	96.31	6.41	1.69	0.00	0.655	0.000	0.00	0.00	0.00	0.00	0.00	0.00
3	LAYBARGE	84.28	6.05	1.70	12.04	1.244	0.000	-0.04	0.00	0.00	0.00	0.00	0.00
5	LAYBARGE	73.45	5.73	1.89	22.87	1.315	0.000	-0.08	0.00	0.00	0.00	0.00	0.00
7	TENSIONR	60.11	5.24	2.28	36.23	1.471	0.000	71.27	0.00	0.00	0.00	0.00	0.00
9	LAYBARGE	51.10	4.85	2.18	45.24	0.000	0.000	71.23	0.00	0.00	0.00	0.00	0.00
10	LAYBARGE	46.45	4.70	2.01	49.89	0.998	0.000	71.21	0.00	0.00	0.00	0.00	0.00
12	LAYBARGE	38.36	4.40	1.89	57.99	0.000	0.000	71.18	0.00	0.00	0.00	0.00	0.00
13	LAYBARGE	35.36	4.31	2.53	60.99	2.865	0.000	71.16	0.00	0.00	0.00	0.00	0.00
15	LAYBARGE	26.35	3.78	3.16	70.02	0.000	0.000	71.12	0.00	0.00	0.00	0.00	0.00
16	LAYBARGE	23.34	3.62	4.65	73.04	5.122	0.000	71.07	0.00	0.00	0.00	0.00	0.00

18	LAYBARGE	11.90	2.34	6.08	84.54	0.000	0.000	70.98	0.00	0.00	0.00	0.00	0.00
19	LAYBARGE	8.85	2.03	5.63	87.60	0.000	0.279	70.95	0.00	0.00	0.00	0.00	0.00
21	LAYBARGE	6.05	1.76	5.37	90.42	0.000	0.000	70.92	0.00	0.00	0.00	0.00	0.00
22	LAYBARGE	3.02	1.49	4.96	93.46	0.000	0.870	70.89	0.00	0.00	0.00	0.00	0.00
24	LAYBARGE	-7.07	0.66	4.44	103.59	0.000	0.000	70.80	0.00	0.00	0.00	0.00	0.00
27	STINGER	-7.50	0.63	4.00	104.01	0.000	0.890	70.80	0.00	0.00	0.00	0.00	0.00
29	STINGER	-16.58	0.03	3.73	113.12	0.830	0.000	70.73	0.00	0.00	0.00	0.00	0.00
32	STINGER	-26.46	-0.60	6.31	123.02	7.466	0.000	70.57	0.00	0.00	0.00	0.00	0.00
34	STINGER	-37.26	-2.30	13.16	133.96	11.038	0.000	70.28	0.00	0.00	0.00	0.00	0.00
36	STINGER	-40.15	-3.21	25.22	136.99	19.583	0.000	69.71	0.00	0.00	0.00	0.00	0.00
38	SAGBEND	-45.83	-6.90	32.84	143.78	0.000	0.000	70.07	0.00	0.00	0.00	0.00	0.00
39	SAGBEND	-50.93	-10.17	32.44	149.83	0.000	0.000	69.76	0.00	0.00	0.00	0.00	0.00
40	SAGBEND	-56.04	-13.39	32.04	155.88	0.000	0.000	69.45	0.00	0.00	0.00	0.00	0.00
41	SAGBEND	-61.18	-16.59	31.64	161.93	0.000	0.000	69.15	0.00	0.00	0.00	0.00	0.00
42	SAGBEND	-66.34	-19.74	31.23	167.98	0.000	0.000	68.85	0.00	0.00	0.00	0.00	0.00
43	SAGBEND	-71.53	-22.86	30.82	174.03	0.000	0.000	68.56	0.00	0.00	0.00	0.00	0.00
44	SAGBEND	-76.74	-25.94	30.41	180.08	0.000	0.000	68.27	0.00	0.00	0.00	0.00	0.00
45	SAGBEND	-81.96	-28.98	29.99	186.13	0.000	0.000	67.98	0.00	0.00	0.00	0.00	0.00
46	SAGBEND	-87.21	-31.99	29.57	192.18	0.000	0.000	67.69	0.00	0.00	0.00	0.00	0.00
47	SAGBEND	-90.63	-33.92	29.30	196.10	0.000	0.000	67.51	0.00	0.00	0.00	0.00	0.00
48	SAGBEND	-94.06	-35.83	15.30	200.04	0.000	0.000	65.41	0.00	4.27	0.00	7.05	1.96
49	SAGBEND	-98.16	-36.94	14.96	204.29	0.000	0.000	64.22	59.83	4.09	92.62	98.77	27.44
50	SAGBEND	-104.02	-38.44	13.53	210.34	0.000	0.000	62.48	120.58	3.84	186.67	192.62	53.51
51	SAGBEND	-109.93	-39.75	11.34	216.39	0.000	0.000	60.94	157.89	3.62	244.44	250.23	69.51
52	SAGBEND	-115.89	-40.80	8.73	222.44	0.000	0.000	59.75	174.94	3.44	270.84	276.51	76.81
53	SAGBEND	-121.89	-41.58	6.01	228.49	0.000	0.000	59.00	172.83	3.32	267.57	273.17	75.88
54	SAGBEND	-127.92	-42.08	3.47	234.54	0.000	0.000	58.66	150.92	3.26	233.65	239.22	66.45
55	SAGBEND	-133.96	-42.33	1.44	240.59	1.423	0.000	58.66	106.85	3.25	165.42	171.00	47.50
56	SEABED	-140.01	-42.41	0.26	246.64	9.190	0.000	58.84	46.20	3.26	71.52	77.17	21.44
57	SEABED	-146.06	-42.41	-0.12	252.69	10.254	0.000	58.88	7.98	3.27	12.36	18.35	5.10
58	SEABED	-152.11	-42.40	-0.13	258.74	8.057	0.000	58.88	-4.04	3.27	-6.25	12.45	3.46
59	SEABED	-158.16	-42.39	-0.05	264.79	6.478	0.000	58.87	-4.08	3.27	-6.31	12.51	3.48

S T A T I C P I P E C O O R D I N A T E S, F O R C E S A N D S T R E S S E S

NODE NO.	PIPE SECTION	X COORD (M)	Y COORD (M)	VERT ANGLE (DEG)	PIPE LENGTH (M)	SUPPORT REACTION (KN)	SEPARA -TION (M)	AXIAL TENSION (KN)	BENDING MOMENT (KN-M)	TENSILE STRESS (MPA)	BENDING STRESS (MPA)	TOTAL STRESS (MPA)	PERCNT YIELD (PCT)
60	SEABED	-164.21	-42.39	-0.01	270.84	5.922	0.000	58.87	-1.76	3.27	-2.72	9.18	2.55
61	SEABED	-170.26	-42.39	0.00	276.89	5.883	0.000	58.88	-0.30	3.27	-0.46	7.21	2.00
62	SEABED	-176.31	-42.39	0.00	282.94	5.967	0.000	58.88	0.16	3.27	0.24	7.02	1.95
63	SEABED	-182.36	-42.39	0.00	288.99	6.027	0.000	58.88	0.16	3.27	0.24	7.03	1.95
64	SEABED	-188.41	-42.39	0.00	295.04	6.048	0.000	58.88	0.07	3.27	0.10	6.91	1.92
65	SEABED	-194.46	-42.39	0.00	301.09	6.050	0.000	58.88	0.01	3.27	0.02	6.84	1.90
66	SEABED	-200.51	-42.39	0.00	307.14	6.047	0.000	58.88	-0.01	3.27	-0.01	6.84	1.90
67	SEABED	-206.56	-42.39	0.00	313.19	6.044	0.000	58.88	-0.01	3.27	-0.01	6.84	1.90
68	SEABED	-212.61	-42.39	0.00	319.24	6.044	0.000	58.88	0.00	3.27	0.00	6.83	1.90
69	SEABED	-218.66	-42.39	0.00	325.29	6.044	0.000	58.88	0.00	3.27	0.00	6.83	1.90
70	SEABED	-224.71	-42.39	0.00	331.34	6.044	0.000	58.88	0.00	3.27	0.00	6.83	1.90
71	SEABED	-230.76	-42.39	0.00	337.39	6.044	0.000	58.88	0.00	3.27	0.00	6.83	1.90
72	SEABED	-236.81	-42.39	0.00	343.44	6.044	0.000	58.88	0.00	3.27	0.00	6.83	1.90
73	SEABED	-242.86	-42.39	0.00	349.49	6.044	0.000	58.88	0.00	3.27	0.00	6.83	1.90
74	SEABED	-248.91	-42.39	0.00	355.54	6.044	0.000	58.88	0.00	3.27	0.00	6.83	1.90
75	SEABED	-254.96	-42.39	0.00	361.59	6.044	0.000	58.88	0.00	3.27	0.00	6.83	1.90
76	SEABED	-261.01	-42.39	0.00	367.64	6.044	0.000	58.88	0.00	3.27	0.00	6.83	1.90
77	SEABED	-267.06	-42.39	0.00	373.69	6.044	0.000	58.88	0.00	3.27	0.00	6.83	1.90
78	SEABED	-273.11	-42.39	0.00	379.74	6.044	0.000	58.88	0.00	3.27	0.00	6.83	1.90
79	SEABED	-279.16	-42.39	0.00	385.79	6.044	0.000	58.88	0.00	3.27	0.00	6.83	1.90
80	SEABED	-285.21	-42.39	0.00	391.84	6.044	0.000	58.88	0.00	3.27	0.00	6.83	1.90
81	SEABED	-291.26	-42.39	0.00	397.89	6.044	0.000	58.88	0.00	3.27	0.00	6.83	1.90
82	SEABED	-297.31	-42.39	0.00	403.94	6.044	0.000	58.88	0.00	3.27	0.00	6.83	1.90
83	SEABED	-303.36	-42.39	0.00	409.99	6.044	0.000	58.88	0.00	3.27	0.00	6.83	1.90
84	SEABED	-309.41	-42.39	0.00	416.04	6.044	0.000	58.88	0.00	3.27	0.00	6.83	1.90
85	SEABED	-315.46	-42.39	0.00	422.09	6.044	0.000	58.88	0.00	3.27	0.00	6.83	1.90
86	SEABED	-321.51	-42.39	0.00	428.14	6.044	0.000	58.88	0.00	3.27	0.00	6.83	1.90
87	SEABED	-327.56	-42.39	0.00	434.19	6.044	0.000	58.88	0.00	3.27	0.00	6.83	1.90
88	SEABED	-333.61	-42.39	0.00	440.24	6.044	0.000	58.88	0.00	3.27	0.00	6.83	1.90
89	SEABED	-339.66	-42.39	0.00	446.29	0.000	0.000	58.88	0.00	3.27	0.00	6.83	1.90

S T A T I C P I P E C O O R D I N A T E S, F O R C E S A N D S T R E S S E S

NODE NO.	PIPE SECTION	X COORD (M)	Y COORD (M)	VERT ANGLE (DEG)	PIPE LENGTH (M)	SUPPORT REACTION (KN)	SEPARA -TION (M)	AXIAL TENSION (KN)	BENDING MOMENT (KN-M)	TENSILE STRESS (MPA)	BENDING STRESS (MPA)	TOTAL STRESS (MPA)	PERCNT YIELD (PCT)
1	LAYBARGE	96.31	6.41	1.69	0.00	0.655	0.000	0.00	0.00	0.00	0.00	0.00	0.00
3	LAYBARGE	84.28	6.05	1.70	12.04	1.244	0.000	-0.04	0.00	0.00	0.00	0.00	0.00
5	LAYBARGE	73.45	5.73	1.89	22.87	1.315	0.000	-0.08	0.00	0.00	0.00	0.00	0.00
7	TENSIONR	60.11	5.24	2.28	36.23	1.471	0.000	71.27	0.00	0.00	0.00	0.00	0.00
9	LAYBARGE	51.10	4.85	2.18	45.24	0.000	0.000	71.23	0.00	0.00	0.00	0.00	0.00
10	LAYBARGE	46.45	4.70	2.01	49.89	0.998	0.000	71.22	0.00	0.00	0.00	0.00	0.00
12	LAYBARGE	38.36	4.40	1.89	57.99	0.000	0.000	71.18	0.00	0.00	0.00	0.00	0.00
13	LAYBARGE	35.36	4.31	2.53	60.99	2.865	0.000	71.16	0.00	0.00	0.00	0.00	0.00
15	LAYBARGE	26.35	3.78	3.16	70.02	0.000	0.000	71.12	0.00	0.00	0.00	0.00	0.00
16	LAYBARGE	23.34	3.62	4.37	73.04	4.436	0.000	71.08	0.00	0.00	0.00	0.00	0.00
18	LAYBARGE	11.89	2.45	5.52	84.54	0.000	0.000	70.99	0.00	0.00	0.00	0.00	0.00
19	LAYBARGE	8.85	2.18	5.07	87.60	0.000	0.419	70.96	0.00	0.00	0.00	0.00	0.00
21	LAYBARGE	6.03	1.93	4.82	90.42	0.000	0.000	70.94	0.00	0.00	0.00	0.00	0.00
22	LAYBARGE	3.03	1.69	4.40	93.43	0.000	1.068	70.91	0.00	0.00	0.00	0.00	0.00
24	LAYBARGE	-7.07	0.96	3.88	103.56	0.000	0.000	70.83	0.00	0.00	0.00	0.00	0.00
27	STINGER	-7.50	0.93	3.44	103.99	0.000	1.191	70.83	0.00	0.00	0.00	0.00	0.00
29	STINGER	-16.59	0.42	2.82	113.10	0.000	0.391	70.77	0.00	0.00	0.00	0.00	0.00
32	STINGER	-26.42	0.01	2.22	122.94	0.597	0.000	70.73	0.00	0.00	0.00	0.00	0.00
34	STINGER	-37.35	-0.38	6.32	133.87	11.218	0.000	70.45	0.00	0.00	0.00	0.00	0.00
36	STINGER	-40.32	-0.94	15.84	136.90	13.337	0.000	70.30	0.00	0.00	0.00	0.00	0.00
38	SAGBEND	-46.73	-3.41	20.85	143.77	0.000	0.000	70.39	0.00	0.00	0.00	0.00	0.00
39	SAGBEND	-52.39	-5.54	20.40	149.82	0.000	0.000	70.19	0.00	0.00	0.00	0.00	0.00
40	SAGBEND	-58.07	-7.62	19.96	155.87	0.000	0.000	69.99	0.00	0.00	0.00	0.00	0.00
41	SAGBEND	-63.76	-9.67	19.52	161.92	0.000	0.000	69.80	0.00	0.00	0.00	0.00	0.00
42	SAGBEND	-69.47	-11.66	19.07	167.97	0.000	0.000	69.61	0.00	0.00	0.00	0.00	0.00
43	SAGBEND	-75.20	-13.62	18.63	174.02	0.000	0.000	69.42	0.00	0.00	0.00	0.00	0.00
44	SAGBEND	-80.94	-15.53	18.18	180.07	0.000	0.000	69.24	0.00	0.00	0.00	0.00	0.00
45	SAGBEND	-86.69	-17.39	17.73	186.12	0.000	0.000	69.07	0.00	0.00	0.00	0.00	0.00
46	SAGBEND	-92.46	-19.21	17.27	192.17	0.000	0.000	68.90	0.00	0.00	0.00	0.00	0.00
47	SAGBEND	-98.25	-20.99	16.82	198.22	0.000	0.000	68.73	0.00	0.00	0.00	0.00	0.00
48	SAGBEND	-104.05	-22.71	16.36	204.27	0.000	0.000	68.56	0.00	0.00	0.00	0.00	0.00
49	SAGBEND	-109.86	-24.40	15.90	210.32	0.000	0.000	68.41	0.00	0.00	0.00	0.00	0.00
50	SAGBEND	-115.68	-26.03	15.44	216.37	0.000	0.000	68.25	0.00	0.00	0.00	0.00	0.00
51	SAGBEND	-121.52	-27.62	14.98	222.42	0.000	0.000	68.10	0.00	0.00	0.00	0.00	0.00
52	SAGBEND	-127.37	-29.16	14.51	228.47	0.000	0.000	67.96	0.00	0.00	0.00	0.00	0.00
53	SAGBEND	-133.23	-30.65	14.04	234.52	0.000	0.000	67.81	0.00	0.00	0.00	0.00	0.00
54	SAGBEND	-139.11	-32.09	13.57	240.57	0.000	0.000	67.68	0.00	0.00	0.00	0.00	0.00
55	SAGBEND	-145.00	-33.49	13.10	246.62	0.000	0.000	67.55	0.00	0.00	0.00	0.00	0.00
56	SAGBEND	-150.89	-34.83	12.63	252.67	0.000	0.000	67.42	0.00	0.00	0.00	0.00	0.00
57	SAGBEND	-156.80	-36.13	12.15	258.72	0.000	0.000	67.30	0.00	0.00	0.00	0.00	0.00
58	SAGBEND	-162.72	-37.38	11.67	264.77	0.000	0.000	67.18	0.00	0.00	0.00	0.00	0.00
59	SAGBEND	-168.65	-38.58	11.20	270.82	0.000	0.000	67.06	0.00	0.00	0.00	0.00	0.00
60	SAGBEND	-174.59	-39.73	10.72	276.87	0.000	0.000	66.96	0.00	0.00	0.00	0.00	0.00

S T A T I C P I P E C O O R D I N A T E S, F O R C E S A N D S T R E S S E S

NODE NO.	PIPE SECTION	X COORD (M)	Y COORD (M)	VERT ANGLE (DEG)	PIPE LENGTH (M)	SUPPORT REACTION (KN)	SEPARA -TION (M)	AXIAL TENSION (KN)	BENDING MOMENT (KN-M)	TENSILE STRESS (MPA)	BENDING STRESS (MPA)	TOTAL STRESS (MPA)	PERCNT YIELD (PCT)
61	SAGBEND	-180.54	-40.83	10.23	282.92	0.000	0.000	66.85	0.00	0.00	0.00	0.00	0.00
62	SAGBEND	-184.03	-41.45	9.95	286.46	0.000	0.000	66.79	0.00	0.00	0.00	0.00	0.00
63	SAGBEND	-187.53	-42.06	1.75	290.02	0.000	0.000	66.10	0.00	3.98	0.00	7.39	2.05
64	SAGBEND	-192.53	-42.20	1.51	295.02	0.000	0.000	65.93	33.98	3.96	52.60	58.97	16.38
65	SAGBEND	-198.58	-42.33	0.86	301.07	0.496	0.000	65.78	44.91	3.94	69.53	75.86	21.07
66	SEABED	-204.63	-42.39	0.27	307.12	5.351	0.000	65.77	27.64	3.93	42.79	49.17	13.66
67	SEABED	-210.68	-42.40	0.00	313.17	7.649	0.000	65.79	8.56	3.93	13.26	19.88	5.52
68	SEABED	-216.73	-42.39	-0.05	319.22	7.183	0.000	65.79	-0.03	3.93	-0.05	7.42	2.06
69	SEABED	-222.78	-42.39	-0.03	325.27	6.443	0.000	65.79	-1.69	3.93	-2.61	9.68	2.69
70	SEABED	-228.83	-42.39	-0.01	331.32	6.071	0.000	65.79	-1.05	3.93	-1.62	8.79	2.44
71	SEABED	-234.88	-42.39	0.00	337.37	5.983	0.000	65.79	-0.32	3.93	-0.50	7.81	2.17
72	SEABED	-240.93	-42.39	0.00	343.42	6.001	0.000	65.79	0.00	3.93	0.00	7.38	2.05
73	SEABED	-246.98	-42.39	0.00	349.47	6.029	0.000	65.79	0.06	3.93	0.10	7.46	2.07
74	SEABED	-253.03	-42.39	0.00	355.52	6.043	0.000	65.79	0.04	3.93	0.06	7.43	2.06
75	SEABED	-259.08	-42.39	0.00	361.57	6.046	0.000	65.79	0.01	3.93	0.02	7.40	2.05
76	SEABED	-265.13	-42.39	0.00	367.62	6.045	0.000	65.79	0.00	3.93	0.00	7.38	2.05
77	SEABED	-271.18	-42.39	0.00	373.67	6.044	0.000	65.79	0.00	3.93	0.00	7.38	2.05
78	SEABED	-277.23	-42.39	0.00	379.72	6.044	0.000	65.79	0.00	3.93	0.00	7.38	2.05
79	SEABED	-283.28	-42.39	0.00	385.77	6.044	0.000	65.79	0.00	3.93	0.00	7.38	2.05

80	SEABED	-289.33	-42.39	0.00	391.82	6.044	0.000	65.79	0.00	3.93	0.00	7.38	2.05
81	SEABED	-295.38	-42.39	0.00	397.87	6.044	0.000	65.79	0.00	3.93	0.00	7.38	2.05
82	SEABED	-301.43	-42.39	0.00	403.92	6.044	0.000	65.79	0.00	3.93	0.00	7.38	2.05
83	SEABED	-307.48	-42.39	0.00	409.97	6.044	0.000	65.79	0.00	3.93	0.00	7.38	2.05
84	SEABED	-313.53	-42.39	0.00	416.02	6.044	0.000	65.79	0.00	3.93	0.00	7.38	2.05
85	SEABED	-319.58	-42.39	0.00	422.07	6.044	0.000	65.79	0.00	3.93	0.00	7.38	2.05
86	SEABED	-325.63	-42.39	0.00	428.12	6.044	0.000	65.79	0.00	3.93	0.00	7.38	2.05
87	SEABED	-331.68	-42.39	0.00	434.17	6.044	0.000	65.79	0.00	3.93	0.00	7.38	2.05
88	SEABED	-337.73	-42.39	0.00	440.22	6.044	0.000	65.79	0.00	3.93	0.00	7.38	2.05
89	SEABED	-343.78	-42.39	0.00	446.27	0.000	0.000	65.79	0.00	3.93	0.00	7.38	2.05

S T A T I C P I P E C O O R D I N A T E S, F O R C E S A N D S T R E S S E S

NODE NO.	PIPE SECTION	X COORD (M)	Y COORD (M)	VERT ANGLE (DEG)	PIPE LENGTH (M)	SUPPORT REACTION (KN)	SEPARA -TION (M)	AXIAL TENSION (KN)	BENDING MOMENT (KN-M)	TENSILE STRESS (MPA)	BENDING STRESS (MPA)	TOTAL STRESS (MPA)	PERCNT YIELD (PCT)
1	LAYBARGE	96.31	6.41	1.69	0.00	0.655	0.000	0.00	0.00	0.00	0.00	0.00	0.00
3	LAYBARGE	84.28	6.05	1.70	12.04	1.244	0.000	-0.04	0.00	0.00	0.00	0.00	0.00
5	LAYBARGE	73.45	5.73	1.89	22.87	1.315	0.000	-0.08	0.00	0.00	0.00	0.00	0.00
7	TENSIONR	60.11	5.24	2.28	36.23	1.465	0.000	67.87	0.00	0.00	0.00	0.00	0.00
9	LAYBARGE	51.10	4.85	2.18	45.24	0.000	0.000	67.83	0.00	0.00	0.00	0.00	0.00
10	LAYBARGE	46.45	4.70	2.00	49.89	1.015	0.000	67.81	0.00	0.00	0.00	0.00	0.00
12	LAYBARGE	38.36	4.40	1.88	57.99	0.000	0.000	67.78	0.00	0.00	0.00	0.00	0.00
13	LAYBARGE	35.36	4.31	2.53	60.99	2.788	0.000	67.76	0.00	0.00	0.00	0.00	0.00
15	LAYBARGE	26.35	3.77	3.15	70.02	0.000	0.000	67.72	0.00	0.00	0.00	0.00	0.00
16	LAYBARGE	23.34	3.62	4.40	73.04	4.384	0.000	67.68	0.00	0.00	0.00	0.00	0.00
18	LAYBARGE	11.89	2.44	5.59	84.54	0.000	0.000	67.59	0.00	0.00	0.00	0.00	0.00
19	LAYBARGE	8.85	2.16	5.12	87.60	0.000	0.400	67.56	0.00	0.00	0.00	0.00	0.00
21	LAYBARGE	6.04	1.91	4.85	90.42	0.000	0.000	67.54	0.00	0.00	0.00	0.00	0.00
22	LAYBARGE	3.00	1.66	4.41	93.46	0.000	1.045	67.51	0.00	0.00	0.00	0.00	0.00
24	LAYBARGE	-7.09	0.93	3.87	103.59	0.000	0.000	67.43	0.00	0.00	0.00	0.00	0.00
27	STINGER	-7.53	0.91	3.40	104.03	0.000	1.168	67.43	0.00	0.00	0.00	0.00	0.00
29	STINGER	-16.63	0.40	2.75	113.14	0.000	0.376	67.37	0.00	0.00	0.00	0.00	0.00
32	STINGER	-26.44	0.01	2.16	122.96	0.715	0.000	67.33	0.00	0.00	0.00	0.00	0.00
34	STINGER	-37.37	-0.38	6.34	133.89	10.779	0.000	67.06	0.00	0.00	0.00	0.00	0.00
36	STINGER	-40.34	-0.94	16.02	136.93	13.020	0.000	66.90	0.00	0.00	0.00	0.00	0.00
38	SAGBEND	-46.71	-3.43	21.15	143.77	0.000	0.000	66.99	0.00	0.00	0.00	0.00	0.00
39	SAGBEND	-52.36	-5.59	20.68	149.82	0.000	0.000	66.78	0.00	0.00	0.00	0.00	0.00
40	SAGBEND	-58.03	-7.71	20.21	155.87	0.000	0.000	66.58	0.00	0.00	0.00	0.00	0.00
41	SAGBEND	-63.72	-9.77	19.75	161.92	0.000	0.000	66.39	0.00	0.00	0.00	0.00	0.00
42	SAGBEND	-69.42	-11.79	19.29	167.97	0.000	0.000	66.20	0.00	0.00	0.00	0.00	0.00
43	SAGBEND	-75.14	-13.77	18.82	174.02	0.000	0.000	66.01	0.00	0.00	0.00	0.00	0.00
44	SAGBEND	-80.87	-15.70	18.35	180.07	0.000	0.000	65.83	0.00	0.00	0.00	0.00	0.00
45	SAGBEND	-86.62	-17.58	17.87	186.12	0.000	0.000	65.65	0.00	0.00	0.00	0.00	0.00
46	SAGBEND	-92.39	-19.41	17.40	192.17	0.000	0.000	65.48	0.00	0.00	0.00	0.00	0.00
47	SAGBEND	-98.17	-21.19	16.92	198.22	0.000	0.000	65.31	0.00	0.00	0.00	0.00	0.00
48	SAGBEND	-103.97	-22.93	16.43	204.27	0.000	0.000	65.14	0.00	0.00	0.00	0.00	0.00
49	SAGBEND	-109.78	-24.62	15.95	210.32	0.000	0.000	64.99	0.00	0.00	0.00	0.00	0.00
50	SAGBEND	-115.60	-26.26	15.47	216.37	0.000	0.000	64.83	0.00	0.00	0.00	0.00	0.00
51	SAGBEND	-121.44	-27.84	14.98	222.42	0.000	0.000	64.68	0.00	0.00	0.00	0.00	0.00
52	SAGBEND	-127.29	-29.38	14.49	228.47	0.000	0.000	64.53	0.00	0.00	0.00	0.00	0.00
53	SAGBEND	-133.15	-30.87	13.99	234.52	0.000	0.000	64.39	0.00	0.00	0.00	0.00	0.00
54	SAGBEND	-139.03	-32.31	13.50	240.57	0.000	0.000	64.26	0.00	0.00	0.00	0.00	0.00
55	SAGBEND	-144.92	-33.70	13.00	246.62	0.000	0.000	64.13	0.00	0.00	0.00	0.00	0.00
56	SAGBEND	-150.82	-35.03	12.50	252.67	0.000	0.000	64.00	0.00	0.00	0.00	0.00	0.00
57	SAGBEND	-156.73	-36.31	12.00	258.72	0.000	0.000	63.88	0.00	0.00	0.00	0.00	0.00
58	SAGBEND	-162.65	-37.55	11.50	264.77	0.000	0.000	63.76	0.00	0.00	0.00	0.00	0.00
59	SAGBEND	-168.59	-38.73	10.99	270.82	0.000	0.000	63.65	0.00	0.00	0.00	0.00	0.00
60	SAGBEND	-174.53	-39.85	10.49	276.87	0.000	0.000	63.54	0.00	0.00	0.00	0.00	0.00

S T A T I C P I P E C O O R D I N A T E S, F O R C E S A N D S T R E S S E S

NODE NO.	PIPE SECTION	X COORD (M)	Y COORD (M)	VERT ANGLE (DEG)	PIPE LENGTH (M)	SUPPORT REACTION (KN)	SEPARA -TION (M)	AXIAL TENSION (KN)	BENDING MOMENT (KN-M)	TENSILE STRESS (MPA)	BENDING STRESS (MPA)	TOTAL STRESS (MPA)	PERCNT YIELD (PCT)
61	SAGBEND	-180.49	-40.93	9.98	282.92	0.000	0.000	63.44	0.00	0.00	0.00	0.00	0.00
62	SAGBEND	-183.98	-41.53	9.68	286.47	0.000	0.000	63.39	0.00	0.00	0.00	0.00	0.00
63	SAGBEND	-187.48	-42.12	1.48	290.02	0.000	0.000	62.73	0.00	3.65	0.00	7.12	1.98
64	SAGBEND	-192.48	-42.24	1.25	295.02	0.000	0.000	62.58	31.50	3.63	48.77	54.82	15.23
65	SAGBEND	-198.53	-42.35	0.67	301.07	1.154	0.000	62.47	39.02	3.62	60.41	66.44	18.45
66	SEABED	-204.58	-42.39	0.18	307.12	6.097	0.000	62.47	21.42	3.61	33.16	39.26	10.91
67	SEABED	-210.63	-42.40	-0.02	313.17	7.501	0.000	62.48	5.76	3.61	8.92	15.35	4.26
68	SEABED	-216.68	-42.39	-0.05	319.22	6.943	0.000	62.48	-0.58	3.61	-0.89	7.87	2.19
69	SEABED	-222.73	-42.39	-0.03	325.27	6.321	0.000	62.48	-1.48	3.61	-2.30	9.11	2.53
70	SEABED	-228.78	-42.39	-0.01	331.32	6.041	0.000	62.48	-0.81	3.61	-1.26	8.19	2.27
71	SEABED	-234.83	-42.39	0.00	337.37	5.988	0.000	62.48	-0.22	3.61	-0.34	7.40	2.05
72	SEABED	-240.88	-42.39	0.00	343.42	6.010	0.000	62.48	0.02	3.61	0.03	7.14	1.98
73	SEABED	-246.93	-42.39	0.00	349.47	6.033	0.000	62.48	0.06	3.61	0.09	7.19	2.00
74	SEABED	-252.98	-42.39	0.00	355.52	6.044	0.000	62.48	0.03	3.61	0.05	7.15	1.99
75	SEABED	-259.03	-42.39	0.00	361.57	6.046	0.000	62.48	0.01	3.61	0.01	7.12	1.98
76	SEABED	-265.08	-42.39	0.00	367.62	6.045	0.000	62.48	0.00	3.61	0.00	7.11	1.98
77	SEABED	-271.13	-42.39	0.00	373.67	6.044	0.000	62.48	0.00	3.61	0.00	7.12	1.98
78	SEABED	-277.18	-42.39	0.00	379.72	6.044	0.000	62.48	0.00	3.61	0.00	7.11	1.98
79	SEABED	-283.23	-42.39	0.00	385.77	6.044	0.000	62.48	0.00	3.61	0.00	7.11	1.98
80	SEABED	-289.28	-42.39	0.00	391.82	6.044	0.000	62.48	0.00	3.61	0.00	7.11	1.98
81	SEABED	-295.33	-42.39	0.00	397.87	6.044	0.000	62.48	0.00	3.61	0.00	7.11	1.98
82	SEABED	-301.38	-42.39	0.00	403.92	6.044	0.000	62.48	0.00	3.61	0.00	7.11	1.98
83	SEABED	-307.43	-42.39	0.00	409.97	6.044	0.000	62.48	0.00	3.61	0.00	7.11	1.98
84	SEABED	-313.48	-42.39	0.00	416.02	6.044	0.000	62.48	0.00	3.61	0.00	7.11	1.98
85	SEABED	-319.53	-42.39	0.00	422.07	6.044	0.000	62.48	0.00	3.61	0.00	7.11	1.98
86	SEABED	-325.58	-42.39	0.00	428.12	6.044	0.000	62.48	0.00	3.61	0.00	7.11	1.98
87	SEABED	-331.63	-42.39	0.00	434.17	6.044	0.000	62.48	0.00	3.61	0.00	7.11	1.98
88	SEABED	-337.68	-42.39	0.00	440.22	0.000	0.000	62.48	0.00	3.61	0.00	7.11	1.98

S T A T I C P I P E C O O R D I N A T E S, F O R C E S A N D S T R E S S E S

NODE NO.	PIPE SECTION	X COORD (M)	Y COORD (M)	VERT ANGLE (DEG)	PIPE LENGTH (M)	SUPPORT REACTION (KN)	SEPARA -TION (M)	AXIAL TENSION (KN)	BENDING MOMENT (KN-M)	TENSILE STRESS (MPA)	BENDING STRESS (MPA)	TOTAL STRESS (MPA)	PERCNT YIELD (PCT)
1	LAYBARGE	96.31	6.41	1.69	0.00	0.655	0.000	0.00	0.00	0.00	0.00	0.00	0.00
3	LAYBARGE	84.28	6.05	1.70	12.04	1.244	0.000	-0.04	0.00	0.00	0.00	0.00	0.00
5	LAYBARGE	73.45	5.73	1.89	22.87	1.315	0.000	-0.08	0.00	0.00	0.00	0.00	0.00
7	TENSIONR	60.11	5.24	2.28	36.23	1.465	0.000	67.87	0.00	0.00	0.00	0.00	0.00
9	LAYBARGE	51.10	4.85	2.18	45.24	0.000	0.000	67.83	0.00	0.00	0.00	0.00	0.00
10	LAYBARGE	46.45	4.70	2.00	49.89	1.015	0.000	67.81	0.00	0.00	0.00	0.00	0.00
12	LAYBARGE	38.36	4.40	1.88	57.99	0.000	0.000	67.78	0.00	0.00	0.00	0.00	0.00
13	LAYBARGE	35.36	4.31	2.53	60.99	2.788	0.000	67.76	0.00	0.00	0.00	0.00	0.00
15	LAYBARGE	26.35	3.77	3.15	70.02	0.000	0.000	67.72	0.00	0.00	0.00	0.00	0.00
16	LAYBARGE	23.34	3.62	4.40	73.04	4.384	0.000	67.68	0.00	0.00	0.00	0.00	0.00
18	LAYBARGE	11.89	2.44	5.59	84.54	0.000	0.000	67.59	0.00	0.00	0.00	0.00	0.00
19	LAYBARGE	8.85	2.16	5.12	87.60	0.000	0.400	67.56	0.00	0.00	0.00	0.00	0.00
21	LAYBARGE	6.04	1.91	4.85	90.42	0.000	0.000	67.54	0.00	0.00	0.00	0.00	0.00
22	LAYBARGE	3.03	1.66	4.41	93.44	0.000	1.045	67.51	0.00	0.00	0.00	0.00	0.00
24	LAYBARGE	-7.07	0.94	3.87	103.56	0.000	0.000	67.43	0.00	0.00	0.00	0.00	0.00
27	STINGER	-7.49	0.91	3.41	103.98	0.000	1.169	67.43	0.00	0.00	0.00	0.00	0.00
29	STINGER	-16.57	0.40	2.75	113.07	0.000	0.377	67.37	0.00	0.00	0.00	0.00	0.00
32	STINGER	-26.47	0.01	2.16	122.98	0.711	0.000	67.33	0.00	0.00	0.00	0.00	0.00
34	STINGER	-37.39	-0.38	6.36	133.92	10.854	0.000	67.06	0.00	0.00	0.00	0.00	0.00
36	STINGER	-40.37	-0.94	15.79	136.95	12.347	0.000	66.93	0.00	0.00	0.00	0.00	0.00
38	SAGBEND	-46.74	-3.37	20.63	143.77	0.000	0.000	66.99	0.00	0.00	0.00	0.00	0.00
39	SAGBEND	-52.41	-5.48	20.16	149.82	0.000	0.000	66.79	0.00	0.00	0.00	0.00	0.00
40	SAGBEND	-58.09	-7.54	19.69	155.87	0.000	0.000	66.60	0.00	0.00	0.00	0.00	0.00
41	SAGBEND	-63.80	-9.55	19.23	161.92	0.000	0.000	66.41	0.00	0.00	0.00	0.00	0.00
42	SAGBEND	-69.52	-11.52	18.76	167.97	0.000	0.000	66.22	0.00	0.00	0.00	0.00	0.00
43	SAGBEND	-75.26	-13.45	18.29	174.02	0.000	0.000	66.04	0.00	0.00	0.00	0.00	0.00
44	SAGBEND	-81.01	-15.32	17.82	180.07	0.000	0.000	65.86	0.00	0.00	0.00	0.00	0.00
45	SAGBEND	-86.77	-17.15	17.34	186.12	0.000	0.000	65.69	0.00	0.00	0.00	0.00	0.00
46	SAGBEND	-92.56	-18.93	16.87	192.17	0.000	0.000	65.52	0.00	0.00	0.00	0.00	0.00
47	SAGBEND	-98.35	-20.66	16.39	198.22	0.000	0.000	65.36	0.00	0.00	0.00	0.00	0.00
48	SAGBEND	-104.17	-22.34	15.90	204.27	0.000	0.000	65.20	0.00	0.00	0.00	0.00	0.00
49	SAGBEND	-109.99	-23.98	15.42	210.32	0.000	0.000	65.05	0.00	0.00	0.00	0.00	0.00
50	SAGBEND	-115.83	-25.56	14.93	216.37	0.000	0.000	64.90	0.00	0.00	0.00	0.00	0.00
51	SAGBEND	-121.68	-27.09	14.44	222.42	0.000	0.000	64.75	0.00	0.00	0.00	0.00	0.00
52	SAGBEND	-127.55	-28.58	13.95	228.47	0.000	0.000	64.61	0.00	0.00	0.00	0.00	0.00
53	SAGBEND	-133.42	-30.01	13.46	234.52	0.000	0.000	64.47	0.00	0.00	0.00	0.00	0.00
54	SAGBEND	-139.31	-31.39	12.96	240.57	0.000	0.000	64.34	0.00	0.00	0.00	0.00	0.00
55	SAGBEND	-145.22	-32.72	12.47	246.62	0.000	0.000	64.22	0.00	0.00	0.00	0.00	0.00
56	SAGBEND	-151.13	-34.00	11.97	252.67	0.000	0.000	64.10	0.00	0.00	0.00	0.00	0.00
57	SAGBEND	-157.05	-35.23	11.47	258.72	0.000	0.000	63.98	0.00	0.00	0.00	0.00	0.00
58	SAGBEND	-162.99	-36.41	10.96	264.77	0.000	0.000	63.87	0.00	0.00	0.00	0.00	0.00
59	SAGBEND	-168.93	-37.53	10.46	270.82	0.000	0.000	63.76	0.00	0.00	0.00	0.00	0.00
60	SAGBEND	-174.89	-38.61	9.95	276.87	0.000	0.000	63.66	0.00	0.00	0.00	0.00	0.00

S T A T I C P I P E C O O R D I N A T E S, F O R C E S A N D S T R E S S E S

NODE NO.	PIPE SECTION	X COORD (M)	Y COORD (M)	VERT ANGLE (DEG)	PIPE LENGTH (M)	SUPPORT REACTION (KN)	SEPARA -TION (M)	AXIAL TENSION (KN)	BENDING MOMENT (KN-M)	TENSILE STRESS (MPA)	BENDING STRESS (MPA)	TOTAL STRESS (MPA)	PERCNT YIELD (PCT)
61	SAGBEND	-180.85	-39.63	9.44	282.92	0.000	0.000	63.57	0.00	0.00	0.00	0.00	0.00
62	SAGBEND	-186.82	-40.59	8.93	288.97	0.000	0.000	63.47	0.00	0.00	0.00	0.00	0.00
63	SAGBEND	-192.80	-41.50	8.42	295.02	0.000	0.000	63.39	0.00	0.00	0.00	0.00	0.00
64	SAGBEND	-197.75	-42.22	1.04	300.02	0.000	0.000	62.85	0.00	3.66	0.00	7.13	1.98
65	SAGBEND	-201.30	-42.28	0.94	303.57	0.000	0.000	62.78	21.10	3.65	32.66	38.80	10.78
66	SAGBEND	-204.85	-42.33	0.69	307.12	0.408	0.000	62.72	30.30	3.64	46.91	52.98	14.72
67	SEABED	-210.90	-42.38	0.26	313.17	4.677	0.000	62.69	22.46	3.64	34.78	40.89	11.36
68	SEABED	-216.95	-42.39	0.02	319.22	7.067	0.000	62.70	8.16	3.64	12.63	18.98	5.27
69	SEABED	-223.00	-42.39	-0.03	325.27	6.952	0.000	62.70	0.72	3.64	1.11	8.08	2.24
70	SEABED	-229.05	-42.39	-0.03	331.32	6.411	0.000	62.70	-1.14	3.64	-1.77	8.66	2.40
71	SEABED	-235.10	-42.39	-0.01	337.37	6.096	0.000	62.70	-0.85	3.64	-1.32	8.26	2.29
72	SEABED	-241.15	-42.39	0.00	343.42	6.005	0.000	62.70	-0.31	3.64	-0.48	7.53	2.09
73	SEABED	-247.20	-42.39	0.00	349.47	6.009	0.000	62.70	-0.03	3.64	-0.04	7.17	1.99
74	SEABED	-253.25	-42.39	0.00	355.52	6.030	0.000	62.70	0.04	3.64	0.07	7.19	2.00
75	SEABED	-259.30	-42.39	0.00	361.57	6.042	0.000	62.70	0.03	3.64	0.05	7.17	1.99
76	SEABED	-265.35	-42.39	0.00	367.62	6.045	0.000	62.70	0.01	3.64	0.02	7.15	1.98
77	SEABED	-271.40	-42.39	0.00	373.67	6.045	0.000	62.70	0.00	3.64	0.00	7.13	1.98
78	SEABED	-277.45	-42.39	0.00	379.72	6.044	0.000	62.70	0.00	3.64	0.00	7.13	1.98
79	SEABED	-283.50	-42.39	0.00	385.77	6.044	0.000	62.70	0.00	3.64	0.00	7.13	1.98
80	SEABED	-289.55	-42.39	0.00	391.82	6.044	0.000	62.70	0.00	3.64	0.00	7.13	1.98
81	SEABED	-295.60	-42.39	0.00	397.87	6.044	0.000	62.70	0.00	3.64	0.00	7.13	1.98
82	SEABED	-301.65	-42.39	0.00	403.92	6.044	0.000	62.70	0.00	3.64	0.00	7.13	1.98
83	SEABED	-307.70	-42.39	0.00	409.97	6.044	0.000	62.70	0.00	3.64	0.00	7.13	1.98
84	SEABED	-313.75	-42.39	0.00	416.02	6.044	0.000	62.70	0.00	3.64	0.00	7.13	1.98
85	SEABED	-319.80	-42.39	0.00	422.07	6.044	0.000	62.70	0.00	3.64	0.00	7.13	1.98
86	SEABED	-325.85	-42.39	0.00	428.12	6.044	0.000	62.70	0.00	3.64	0.00	7.13	1.98
87	SEABED	-331.90	-42.39	0.00	434.17	6.044	0.000	62.70	0.00	3.64	0.00	7.13	1.98
88	SEABED	-337.95	-42.39	0.00	440.22	0.000	0.000	62.70	0.00	3.64	0.00	7.13	1.98

LAMPIRAN D

HASIL OUTPUT *SOFTWARE* OFFPIPE

(ANALISA DINAMIS)

INITIATION STRAIN HEADING 0°

S T A T I C P I P E C O O R D I N A T E S, F O R C E S A N D S T R A I N S

NODE NO.	PIPE SECTION	X COORD (M)	Y COORD (M)	VERT ANGLE (DEG)	PIPE LENGTH (M)	SUPPORT REACTION (KN)	SEPARA -TION (M)	AXIAL TENSION (KN)	BENDING MOMENT (KN-M)	TENSILE STRAIN (PCT)	BENDING STRAIN (PCT)	TOTAL STRAIN (PCT)	PERCNT ALLOW (PCT)
1	LAYBARGE	96.31	6.41	1.93	0.00	9.919	0.000	0.00	2.74	0.0000	0.0020	0.0020	0.00
3	LAYBARGE	84.28	6.05	1.58	12.04	24.237	0.000	-0.73	-19.34	0.0000	-0.0145	0.0145	0.00
5	LAYBARGE	73.45	5.73	1.89	22.87	24.092	0.000	-1.39	-28.85	-0.0001	-0.0216	0.0216	0.00
7	TENSIONR	60.10	5.24	2.33	36.23	32.869	0.000	70.91	-24.98	0.0033	-0.0187	0.0220	0.00
9	LAYBARGE	51.10	4.86	2.19	45.24	0.000	0.000	70.17	34.23	0.0033	0.0256	0.0289	0.00
10	LAYBARGE	46.45	4.70	1.85	49.89	6.755	0.000	69.87	17.86	0.0032	0.0134	0.0166	0.00
12	LAYBARGE	35.36	4.31	2.82	60.99	45.237	0.000	68.73	-94.12	0.0032	-0.0704	0.0736	0.00
14	LAYBARGE	25.34	3.64	4.49	71.03	14.579	0.000	67.71	-34.68	0.0031	-0.0259	0.0291	0.00
16	LAYBARGE	19.30	3.15	4.69	77.09	0.000	0.000	66.76	0.00	0.0031	0.0000	0.0031	0.00
17	LAYBARGE	8.83	2.27	4.72	87.59	0.000	0.516	66.74	0.00	0.0000	0.0000	0.0000	0.00
19	LAYBARGE	4.81	1.94	4.61	91.63	0.000	0.000	66.73	0.00	0.0000	0.0000	0.0000	0.00
20	LAYBARGE	3.02	1.80	4.51	93.43	0.000	1.184	66.72	0.00	0.0000	0.0000	0.0000	0.00
24	STINGER	-7.53	0.98	4.33	104.00	0.000	1.246	66.70	0.00	0.0000	0.0000	0.0000	0.00
26	STINGER	-16.61	0.31	4.14	113.11	0.000	0.294	66.69	0.00	0.0000	0.0000	0.0000	0.00
29	STINGER	-26.49	-0.39	5.21	123.02	2.739	0.000	66.66	0.00	0.0000	0.0000	0.0000	0.00
31	STINGER	-37.35	-1.60	8.82	133.95	5.770	0.000	66.61	0.00	0.0000	0.0000	0.0000	0.00
33	STINGER	-40.32	-2.19	11.29	136.98	0.000	0.191	66.67	0.00	0.0000	0.0000	0.0000	0.00
35	SAGBEND	-46.47	-3.42	11.27	143.25	0.000	0.000	66.67	0.00	0.0000	0.0000	0.0000	0.00
36	SAGBEND	-52.40	-4.60	11.26	149.30	0.000	0.000	66.66	0.00	0.0000	0.0000	0.0000	0.00
37	SAGBEND	-58.34	-5.78	11.25	155.35	0.000	0.000	66.66	0.00	0.0000	0.0000	0.0000	0.00
38	SAGBEND	-64.27	-6.96	11.23	161.40	0.000	0.000	66.66	0.00	0.0000	0.0000	0.0000	0.00
39	SAGBEND	-70.21	-8.14	11.22	167.45	0.000	0.000	66.66	0.00	0.0000	0.0000	0.0000	0.00
40	SAGBEND	-76.14	-9.32	11.21	173.50	0.000	0.000	66.65	0.00	0.0000	0.0000	0.0000	0.00
41	SAGBEND	-82.08	-10.49	11.19	179.55	0.000	0.000	66.65	0.00	0.0000	0.0000	0.0000	0.00
42	SAGBEND	-88.01	-11.66	11.18	185.60	0.000	0.000	66.65	0.00	0.0000	0.0000	0.0000	0.00
43	SAGBEND	-93.95	-12.84	11.17	191.65	0.000	0.000	66.64	0.00	0.0000	0.0000	0.0000	0.00
44	SAGBEND	-99.88	-14.01	11.15	197.70	0.000	0.000	66.64	0.00	0.0000	0.0000	0.0000	0.00
45	SAGBEND	-105.82	-15.18	11.14	203.75	0.000	0.000	66.64	0.00	0.0000	0.0000	0.0000	0.00
46	SAGBEND	-111.75	-16.34	11.13	209.80	0.000	0.000	66.63	0.00	0.0000	0.0000	0.0000	0.00
47	SAGBEND	-117.69	-17.51	11.11	215.85	0.000	0.000	66.63	0.00	0.0000	0.0000	0.0000	0.00
48	SAGBEND	-123.63	-18.68	11.10	221.90	0.000	0.000	66.63	0.00	0.0000	0.0000	0.0000	0.00
49	SAGBEND	-129.56	-19.84	11.09	227.95	0.000	0.000	66.62	0.00	0.0000	0.0000	0.0000	0.00
50	SAGBEND	-135.50	-21.00	11.07	234.00	0.000	0.000	66.62	0.00	0.0000	0.0000	0.0000	0.00
51	SAGBEND	-141.44	-22.16	11.06	240.05	0.000	0.000	66.62	0.00	0.0000	0.0000	0.0000	0.00
52	SAGBEND	-147.38	-23.32	11.05	246.10	0.000	0.000	66.62	0.00	0.0000	0.0000	0.0000	0.00
53	SAGBEND	-153.32	-24.48	11.03	252.15	0.000	0.000	66.61	0.00	0.0000	0.0000	0.0000	0.00
54	SAGBEND	-159.25	-25.64	11.02	258.20	0.000	0.000	66.61	0.00	0.0000	0.0000	0.0000	0.00
55	SAGBEND	-165.19	-26.80	11.01	264.25	0.000	0.000	66.61	0.00	0.0000	0.0000	0.0000	0.00
56	SAGBEND	-171.13	-27.95	10.99	270.30	0.000	0.000	66.60	0.00	0.0000	0.0000	0.0000	0.00
57	SAGBEND	-177.07	-29.10	10.98	276.35	0.000	0.000	66.60	0.00	0.0000	0.0000	0.0000	0.00
58	SAGBEND	-180.66	-29.80	10.97	280.01	0.000	0.000	66.60	0.00	0.0000	0.0000	0.0000	0.00
59	SAGBEND	-184.81	-30.59	10.63	284.23	0.000	0.000	66.52	0.00	0.0000	0.0000	0.0000	0.00
60	SAGBEND	-188.96	-31.36	10.30	288.45	0.000	0.000	66.45	0.00	0.0000	0.0000	0.0000	0.00

S T A T I C P I P E C O O R D I N A T E S, F O R C E S A N D S T R A I N S

NODE NO.	PIPE SECTION	X COORD (M)	Y COORD (M)	VERT ANGLE (DEG)	PIPE LENGTH (M)	SUPPORT REACTION (KN)	SEPARA -TION (M)	AXIAL TENSION (KN)	BENDING MOMENT (KN-M)	TENSILE STRAIN (PCT)	BENDING STRAIN (PCT)	TOTAL STRAIN (PCT)	PERCNT ALLOW (PCT)
61	SAGBEND	-194.92	-32.41	9.81	294.50	0.000	0.000	66.35	0.00	0.0000	0.0000	0.0000	0.00
62	SAGBEND	-200.88	-33.42	9.32	300.55	0.000	0.000	66.26	0.00	0.0000	0.0000	0.0000	0.00
63	SAGBEND	-206.86	-34.37	8.83	306.60	0.000	0.000	66.17	0.00	0.0000	0.0000	0.0000	0.00
64	SAGBEND	-212.84	-35.28	8.34	312.65	0.000	0.000	66.08	0.00	0.0000	0.0000	0.0000	0.00
65	SAGBEND	-218.83	-36.13	7.85	318.70	0.000	0.000	66.00	0.00	0.0000	0.0000	0.0000	0.00
66	SAGBEND	-224.82	-36.93	7.36	324.75	0.000	0.000	65.92	0.00	0.0000	0.0000	0.0000	0.00
67	SAGBEND	-230.83	-37.68	6.87	330.80	0.000	0.000	65.85	0.00	0.0000	0.0000	0.0000	0.00
68	SAGBEND	-236.84	-38.38	6.37	336.85	0.000	0.000	65.79	0.00	0.0000	0.0000	0.0000	0.00
69	SAGBEND	-242.85	-39.02	5.87	342.90	0.000	0.000	65.73	0.00	0.0000	0.0000	0.0000	0.00
70	SAGBEND	-248.87	-39.61	5.38	348.95	0.000	0.000	65.67	0.00	0.0000	0.0000	0.0000	0.00
71	SAGBEND	-254.90	-40.15	4.88	355.00	0.000	0.000	65.62	0.00	0.0000	0.0000	0.0000	0.00
72	SAGBEND	-260.93	-40.64	4.38	361.05	0.000	0.000	65.57	0.00	0.0000	0.0000	0.0000	0.00
73	SAGBEND	-266.96	-41.08	3.88	367.10	0.000	0.000	65.53	0.00	0.0000	0.0000	0.0000	0.00
74	SAGBEND	-273.00	-41.46	3.39	373.15	0.000	0.000	65.50	0.00	0.0000	0.0000	0.0000	0.00
75	SAGBEND	-279.04	-41.79	2.89	379.20	0.000	0.000	65.46	0.00	0.0000	0.0000	0.0000	0.00
76	SAGBEND	-285.09	-42.07	2.39	385.25	0.000	0.000	65.44	0.00	0.0000	0.0000	0.0000	0.00
77	SAGBEND	-291.13	-42.30	1.88	391.30	0.000	0.000	65.42	0.00	0.0000	0.0000	0.0000	0.00
78	SAGBEND	-297.18	-42.47	1.38	397.35	0.000	0.000	65.40	0.00	0.0000	0.0000	0.0000	0.00
79	SAGBEND	-303.23	-42.59	0.88	403.40	0.000	0.000	65.39	0.00	0.0000	0.0000	0.0000	0.00
80	SAGBEND	-309.28	-42.66	0.39	409.45	0.018	0.000	65.38	-0.01	0.0000	0.0000	0.0000	0.00
81	SEABED	-315.33	-42.67	0.01	415.50	0.409	0.000	65.38	0.00	0.0000	0.0000	0.0000	0.00
82	SEABED	-321.38	-42.67	0.00	421.55	0.568	0.000	65.38	0.00	0.0000	0.0000	0.0000	0.00
83	SEABED	-327.43	-42.67	0.00	427.60	0.572	0.000	65.38	0.00	0.0000	0.0000	0.0000	0.00
84	SEABED	-333.48	-42.67	0.00	433.65	0.572	0.000	65.38	0.00	0.0000	0.0000	0.0000	0.00
85	SEABED	-339.53	-42.67	0.00	439.70	0.572	0.000	65.38	0.00	0.0000	0.0000	0.0000	0.00
86	SEABED	-345.58	-42.67	0.00	445.75	0.572	0.000	65.38	0.00	0.0000	0.0000	0.0000	0.00
87	SEABED	-351.63	-42.67	0.00	451.80	0.572	0.000	65.38	0.00	0.0000	0.0000	0.0000	0.00
88	SEABED	-357.68	-42.67	0.00	457.85	0.572	0.000	65.38	0.00	0.0000	0.0000	0.0000	0.00
89	SEABED	-363.73	-42.67	0.00	463.90	0.572	0.000	65.38	0.00	0.0000	0.0000	0.0000	0.00
90	SEABED	-369.78	-42.67	0.00	469.95	0.572	0.000	65.38	0.00	0.0000	0.0000	0.0000	0.00
91	SEABED	-375.83	-42.67	0.00	476.00	0.572	0.000	65.38	0.00	0.0000	0.0000	0.0000	0.00
92	SEABED	-381.88	-42.67	0.00	482.05	0.572	0.000	65.38	0.00	0.0000	0.0000	0.0000	0.00
93	SEABED	-387.93	-42.67	0.00	488.10	0.572	0.000	65.38	0.00	0.0000	0.0000	0.0000	0.00
94	SEABED	-393.98	-42.67	0.00	494.15	0.572	0.000	65.38	0.00	0.0000	0.0000	0.0000	0.00
95	SEABED	-400.03	-42.67	0.00	500.20	0.572	0.000	65.38	0.00	0.0000	0.0000	0.0000	0.00
96	SEABED	-406.08	-42.67	0.00	506.25	0.572	0.000	65.38	0.00	0.0000	0.0000	0.0000	0.00
97	SEABED	-412.13	-42.67	0.00	512.30	0.572	0.000	65.38	0.00	0.0000	0.0000	0.0000	0.00
98	SEABED	-418.18	-42.67	0.00	518.35	0.572	0.000	65.38	0.00	0.0000	0.0000	0.0000	0.00
99	SEABED	-424.23	-42.67	0.00	524.40	0.572	0.000	65.38	0.00	0.0000	0.0000	0.0000	0.00
100	SEABED	-430.28	-42.67	0.00	530.45	0.572	0.000	65.38	0.00	0.0000	0.0000	0.0000	0.00
101	SEABED	-436.33	-42.67	0.00	536.50	0.572	0.000	65.38	0.00	0.0000	0.0000	0.0000	0.00
102	SEABED	-442.38	-42.67	0.00	542.55	0.572	0.000	65.38	0.00	0.0000	0.0000	0.0000	0.00
103	SEABED	-448.43	-42.67	0.00	548.60	0.572	0.000	65.38	0.00	0.0000	0.0000	0.0000	0.00
104	SEABED	-454.48	-42.67	0.00	554.65	0.572	0.000	65.38	0.00	0.0000	0.0000	0.0000	0.00

S T A T I C P I P E C O O R D I N A T E S, F O R C E S A N D S T R A I N S

NODE NO.	PIPE SECTION	X COORD (M)	Y COORD (M)	VERT ANGLE (DEG)	PIPE LENGTH (M)	SUPPORT REACTION (KN)	SEPARA -TION (M)	AXIAL TENSION (KN)	BENDING MOMENT (KN-M)	TENSILE STRAIN (PCT)	BENDING STRAIN (PCT)	TOTAL STRAIN (PCT)	PERCNT ALLOW (PCT)
105	SEABED	-460.53	-42.67	0.00	560.70	0.572	0.000	65.38	0.00	0.0000	0.0000	0.0000	0.00
106	SEABED	-466.58	-42.67	0.00	566.75	0.572	0.000	65.38	0.00	0.0000	0.0000	0.0000	0.00
107	SEABED	-472.63	-42.67	0.00	572.80	0.572	0.000	65.38	0.00	0.0000	0.0000	0.0000	0.00
108	SEABED	-478.68	-42.67	0.00	578.85	0.572	0.000	65.38	0.00	0.0000	0.0000	0.0000	0.00
109	SEABED	-484.73	-42.67	0.00	584.90	0.572	0.000	65.38	0.00	0.0000	0.0000	0.0000	0.00
110	SEABED	-490.78	-42.67	0.00	590.95	0.572	0.000	65.38	0.00	0.0000	0.0000	0.0000	0.00
111	SEABED	-496.83	-42.67	0.00	597.00	0.572	0.000	65.38	0.00	0.0000	0.0000	0.0000	0.00
112	SEABED	-502.88	-42.67	0.00	603.05	0.572	0.000	65.38	0.00	0.0000	0.0000	0.0000	0.00
113	SEABED	-508.93	-42.67	0.00	609.10	0.572	0.000	65.38	0.00	0.0000	0.0000	0.0000	0.00
114	SEABED	-514.98	-42.67	0.00	615.15	0.572	0.000	65.38	0.00	0.0000	0.0000	0.0000	0.00
115	SEABED	-521.03	-42.67	0.00	621.20	0.572	0.000	65.38	0.00	0.0000	0.0000	0.0000	0.00
116	SEABED	-527.08	-42.67	0.00	627.25	0.572	0.000	65.38	0.00	0.0000	0.0000	0.0000	0.00
117	SEABED	-533.13	-42.67	0.00	633.30	0.572	0.000	65.38	0.00	0.0000	0.0000	0.0000	0.00
118	SEABED	-539.18	-42.67	0.00	639.35	0.572	0.000	65.38	0.00	0.0000	0.0000	0.0000	0.00
119	SEABED	-545.23	-42.67	0.00	645.40	0.572	0.000	65.38	0.00	0.0000	0.0000	0.0000	0.00
120	SEABED	-551.28	-42.67	0.00	651.45	0.572	0.000	65.38	0.00	0.0000	0.0000	0.0000	0.00
121	SEABED	-557.33	-42.67	0.00	657.50	0.572	0.000	65.38	0.00	0.0000	0.0000	0.0000	0.00
122	SEABED	-563.38	-42.67	0.00	663.55	0.572	0.000	65.38	0.00	0.0000	0.0000	0.0000	0.00
123	SEABED	-569.43	-42.67	0.00	669.60	0.570	0.000	65.38	0.00	0.0000	0.0000	0.0000	0.00
124	SEABED	-575.48	-42.67	-0.01	675.65	0.451	0.000	65.38	0.00	0.0000	0.0000	0.0000	0.00
125	SEABED	-579.84	-42.67	-0.12	680.01	0.000	0.000	65.38	0.00	0.0000	0.0000	0.0000	0.00

S T A T I C P I P E C O O R D I N A T E S, F O R C E S A N D S T R A I N S

NODE NO.	PIPE SECTION	X COORD (M)	Y COORD (M)	VERT ANGLE (DEG)	PIPE LENGTH (M)	SUPPORT REACTION (KN)	SEPARA -TION (M)	AXIAL TENSION (KN)	BENDING MOMENT (KN-M)	TENSILE STRAIN (PCT)	BENDING STRAIN (PCT)	TOTAL STRAIN (PCT)	PERCNT ALLOW (PCT)
1	LAYBARGE	96.31	6.41	1.93	0.00	9.929	0.000	0.00	2.74	0.0000	0.0021	0.0021	0.00
3	LAYBARGE	84.28	6.05	1.58	12.04	24.168	0.000	-0.73	-19.23	0.0000	-0.0144	0.0144	0.00

5	LAYBARGE	73.45	5.73	1.90	22.87	24.322	0.000	-1.39	-29.30	-0.0001	-0.0219	0.0220	0.00
7	TENSIONR	60.10	5.24	2.31	36.23	32.092	0.000	70.92	-23.79	0.0033	-0.0178	0.0211	0.00
9	LAYBARGE	51.10	4.87	2.20	45.24	0.000	0.000	70.19	30.53	0.0033	0.0228	0.0261	0.00
10	LAYBARGE	46.45	4.70	1.92	49.89	10.589	0.000	69.88	12.10	0.0033	0.0091	0.0123	0.00
12	LAYBARGE	35.36	4.31	2.59	60.99	27.676	0.000	68.88	-78.44	0.0032	-0.0587	0.0619	0.00
14	LAYBARGE	25.34	3.64	5.34	71.03	44.417	0.000	67.22	-141.82	0.0031	-0.1061	0.1092	0.00
16	LAYBARGE	19.32	2.99	6.68	77.09	0.000	0.000	66.42	-32.32	0.0031	-0.0242	0.0273	0.00
17	LAYBARGE	8.88	1.76	6.65	87.60	11.918	0.000	63.97	1.55	0.0030	0.0012	0.0041	0.00
19	LAYBARGE	4.87	1.29	6.63	91.63	0.000	0.000	63.03	0.00	0.0029	0.0000	0.0029	0.00
20	LAYBARGE	3.08	1.19	3.28	93.43	0.000	0.565	63.13	0.00	0.0000	0.0000	0.0000	0.00
24	STINGER	-7.47	0.59	3.10	104.00	0.000	0.855	63.11	0.00	0.0000	0.0000	0.0000	0.00
26	STINGER	-16.57	0.12	2.91	113.11	0.000	0.100	63.10	0.00	0.0000	0.0000	0.0000	0.00
29	STINGER	-26.47	-0.37	4.49	123.02	3.690	0.000	63.07	0.00	0.0000	0.0000	0.0000	0.00
31	STINGER	-37.34	-1.54	8.61	133.95	5.464	0.000	63.03	0.00	0.0000	0.0000	0.0000	0.00
33	STINGER	-40.31	-2.12	11.08	136.98	0.000	0.191	63.09	0.00	0.0000	0.0000	0.0000	0.00
35	SAGBEND	-46.47	-3.33	11.06	143.25	0.000	0.000	63.09	0.00	0.0000	0.0000	0.0000	0.00
36	SAGBEND	-52.40	-4.49	11.05	149.30	0.000	0.000	63.09	0.00	0.0000	0.0000	0.0000	0.00
37	SAGBEND	-58.34	-5.64	11.03	155.35	0.000	0.000	63.08	0.00	0.0000	0.0000	0.0000	0.00
38	SAGBEND	-64.28	-6.80	11.02	161.40	0.000	0.000	63.08	0.00	0.0000	0.0000	0.0000	0.00
39	SAGBEND	-70.22	-7.96	11.00	167.45	0.000	0.000	63.08	0.00	0.0000	0.0000	0.0000	0.00
40	SAGBEND	-76.16	-9.11	10.99	173.50	0.000	0.000	63.07	0.00	0.0000	0.0000	0.0000	0.00
41	SAGBEND	-82.10	-10.26	10.97	179.55	0.000	0.000	63.07	0.00	0.0000	0.0000	0.0000	0.00
42	SAGBEND	-88.04	-11.41	10.96	185.60	0.000	0.000	63.07	0.00	0.0000	0.0000	0.0000	0.00
43	SAGBEND	-93.98	-12.56	10.95	191.65	0.000	0.000	63.07	0.00	0.0000	0.0000	0.0000	0.00
44	SAGBEND	-99.92	-13.71	10.93	197.70	0.000	0.000	63.06	0.00	0.0000	0.0000	0.0000	0.00
45	SAGBEND	-105.86	-14.86	10.92	203.75	0.000	0.000	63.06	0.00	0.0000	0.0000	0.0000	0.00
46	SAGBEND	-111.80	-16.00	10.90	209.80	0.000	0.000	63.06	0.00	0.0000	0.0000	0.0000	0.00
47	SAGBEND	-117.74	-17.15	10.89	215.85	0.000	0.000	63.05	0.00	0.0000	0.0000	0.0000	0.00
48	SAGBEND	-123.68	-18.29	10.88	221.90	0.000	0.000	63.05	0.00	0.0000	0.0000	0.0000	0.00
49	SAGBEND	-129.62	-19.43	10.86	227.95	0.000	0.000	63.05	0.00	0.0000	0.0000	0.0000	0.00
50	SAGBEND	-135.56	-20.57	10.85	234.00	0.000	0.000	63.04	0.00	0.0000	0.0000	0.0000	0.00
51	SAGBEND	-141.50	-21.71	10.83	240.05	0.000	0.000	63.04	0.00	0.0000	0.0000	0.0000	0.00
52	SAGBEND	-147.45	-22.84	10.82	246.10	0.000	0.000	63.04	0.00	0.0000	0.0000	0.0000	0.00
53	SAGBEND	-153.39	-23.98	10.81	252.15	0.000	0.000	63.04	0.00	0.0000	0.0000	0.0000	0.00
54	SAGBEND	-159.33	-25.11	10.79	258.20	0.000	0.000	63.03	0.00	0.0000	0.0000	0.0000	0.00
55	SAGBEND	-165.28	-26.24	10.78	264.25	0.000	0.000	63.03	0.00	0.0000	0.0000	0.0000	0.00
56	SAGBEND	-171.22	-27.38	10.76	270.30	0.000	0.000	63.03	0.00	0.0000	0.0000	0.0000	0.00
57	SAGBEND	-177.16	-28.50	10.75	276.35	0.000	0.000	63.02	0.00	0.0000	0.0000	0.0000	0.00
58	SAGBEND	-183.11	-29.63	10.73	282.40	0.000	0.000	63.02	0.00	0.0000	0.0000	0.0000	0.00
59	SAGBEND	-186.84	-30.34	10.73	286.21	0.000	0.000	63.02	0.00	0.0000	0.0000	0.0000	0.00
60	SAGBEND	-190.58	-31.05	10.72	290.01	0.000	0.000	63.02	0.00	0.0000	0.0000	0.0000	0.00

S T A T I C P I P E C O O R D I N A T E S, F O R C E S A N D S T R A I N S

NODE NO.	PIPE SECTION	X COORD (M)	Y COORD (M)	VERT ANGLE (DEG)	PIPE LENGTH (M)	SUPPORT REACTION (KN)	SEPARA -TION (M)	AXIAL TENSION (KN)	BENDING MOMENT (KN-M)	TENSILE STRAIN (PCT)	BENDING STRAIN (PCT)	TOTAL STRAIN (PCT)	PERCNT ALLOW (PCT)
61	SAGBEND	-195.00	-31.87	10.34	294.50	0.000	0.000	62.94	0.00	0.0000	0.0000	0.0000	0.00
62	SAGBEND	-200.95	-32.93	9.82	300.55	0.000	0.000	62.84	0.00	0.0000	0.0000	0.0000	0.00
63	SAGBEND	-206.92	-33.93	9.31	306.60	0.000	0.000	62.74	0.00	0.0000	0.0000	0.0000	0.00
64	SAGBEND	-212.90	-34.88	8.79	312.65	0.000	0.000	62.65	0.00	0.0000	0.0000	0.0000	0.00
65	SAGBEND	-218.88	-35.78	8.28	318.70	0.000	0.000	62.57	0.00	0.0000	0.0000	0.0000	0.00
66	SAGBEND	-224.87	-36.63	7.76	324.75	0.000	0.000	62.49	0.00	0.0000	0.0000	0.0000	0.00
67	SAGBEND	-230.87	-37.42	7.24	330.80	0.000	0.000	62.41	0.00	0.0000	0.0000	0.0000	0.00
68	SAGBEND	-236.87	-38.15	6.71	336.85	0.000	0.000	62.35	0.00	0.0000	0.0000	0.0000	0.00
69	SAGBEND	-242.88	-38.83	6.19	342.90	0.000	0.000	62.28	0.00	0.0000	0.0000	0.0000	0.00
70	SAGBEND	-248.90	-39.45	5.67	348.95	0.000	0.000	62.22	0.00	0.0000	0.0000	0.0000	0.00
71	SAGBEND	-254.92	-40.02	5.14	355.00	0.000	0.000	62.17	0.00	0.0000	0.0000	0.0000	0.00
72	SAGBEND	-260.95	-40.54	4.62	361.05	0.000	0.000	62.12	0.00	0.0000	0.0000	0.0000	0.00
73	SAGBEND	-266.99	-41.00	4.09	367.10	0.000	0.000	62.08	0.00	0.0000	0.0000	0.0000	0.00
74	SAGBEND	-273.02	-41.40	3.56	373.15	0.000	0.000	62.04	0.00	0.0000	0.0000	0.0000	0.00
75	SAGBEND	-279.06	-41.75	3.04	379.20	0.000	0.000	62.00	0.00	0.0000	0.0000	0.0000	0.00
76	SAGBEND	-285.10	-42.04	2.51	385.25	0.000	0.000	61.98	0.00	0.0000	0.0000	0.0000	0.00
77	SAGBEND	-291.15	-42.28	1.98	391.30	0.000	0.000	61.95	0.00	0.0000	0.0000	0.0000	0.00
78	SAGBEND	-297.20	-42.46	1.45	397.35	0.000	0.000	61.94	0.00	0.0000	0.0000	0.0000	0.00
79	SAGBEND	-303.25	-42.59	0.92	403.40	0.000	0.000	61.93	0.00	0.0000	0.0000	0.0000	0.00
80	SAGBEND	-309.30	-42.66	0.40	409.45	0.020	0.000	61.92	-0.01	0.0000	0.0000	0.0000	0.00
81	SEABED	-315.35	-42.67	0.01	415.50	0.417	0.000	61.92	0.00	0.0000	0.0000	0.0000	0.00
82	SEABED	-321.40	-42.67	0.00	421.55	0.568	0.000	61.92	0.00	0.0000	0.0000	0.0000	0.00
83	SEABED	-327.45	-42.67	0.00	427.60	0.572	0.000	61.92	0.00	0.0000	0.0000	0.0000	0.00
84	SEABED	-333.50	-42.67	0.00	433.65	0.572	0.000	61.92	0.00	0.0000	0.0000	0.0000	0.00
85	SEABED	-339.55	-42.67	0.00	439.70	0.572	0.000	61.92	0.00	0.0000	0.0000	0.0000	0.00
86	SEABED	-345.60	-42.67	0.00	445.75	0.572	0.000	61.92	0.00	0.0000	0.0000	0.0000	0.00
87	SEABED	-351.65	-42.67	0.00	451.80	0.572	0.000	61.92	0.00	0.0000	0.0000	0.0000	0.00
88	SEABED	-357.70	-42.67	0.00	457.85	0.572	0.000	61.92	0.00	0.0000	0.0000	0.0000	0.00
89	SEABED	-363.75	-42.67	0.00	463.90	0.572	0.000	61.92	0.00	0.0000	0.0000	0.0000	0.00
90	SEABED	-369.80	-42.67	0.00	469.95	0.572	0.000	61.92	0.00	0.0000	0.0000	0.0000	0.00
91	SEABED	-375.85	-42.67	0.00	476.00	0.572	0.000	61.92	0.00	0.0000	0.0000	0.0000	0.00
92	SEABED	-381.90	-42.67	0.00	482.05	0.572	0.000	61.92	0.00	0.0000	0.0000	0.0000	0.00
93	SEABED	-387.95	-42.67	0.00	488.10	0.572	0.000	61.92	0.00	0.0000	0.0000	0.0000	0.00
94	SEABED	-394.00	-42.67	0.00	494.15	0.572	0.000	61.92	0.00	0.0000	0.0000	0.0000	0.00
95	SEABED	-400.05	-42.67	0.00	500.20	0.572	0.000	61.92	0.00	0.0000	0.0000	0.0000	0.00
96	SEABED	-406.10	-42.67	0.00	506.25	0.572	0.000	61.92	0.00	0.0000	0.0000	0.0000	0.00
97	SEABED	-412.15	-42.67	0.00	512.30	0.572	0.000	61.92	0.00	0.0000	0.0000	0.0000	0.00
98	SEABED	-418.20	-42.67	0.00	518.35	0.572	0.000	61.92	0.00	0.0000	0.0000	0.0000	0.00
99	SEABED	-424.25	-42.67	0.00	524.41	0.572	0.000	61.92	0.00	0.0000	0.0000	0.0000	0.00
100	SEABED	-430.30	-42.67	0.00	530.46	0.572	0.000	61.92	0.00	0.0000	0.0000	0.0000	0.00
101	SEABED	-436.35	-42.67	0.00	536.51	0.572	0.000	61.92	0.00	0.0000	0.0000	0.0000	0.00
102	SEABED	-442.40	-42.67	0.00	542.56	0.572	0.000	61.92	0.00	0.0000	0.0000	0.0000	0.00
103	SEABED	-448.45	-42.67	0.00	548.61	0.572	0.000	61.92	0.00	0.0000	0.0000	0.0000	0.00
104	SEABED	-454.50	-42.67	0.00	554.66	0.572	0.000	61.92	0.00	0.0000	0.0000	0.0000	0.00

S T A T I C P I P E C O O R D I N A T E S, F O R C E S A N D S T R A I N S

NODE NO.	PIPE SECTION	X COORD (M)	Y COORD (M)	VERT ANGLE (DEG)	PIPE LENGTH (M)	SUPPORT REACTION (KN)	SEPARA -TION (M)	AXIAL TENSION (KN)	BENDING MOMENT (KN-M)	TENSILE STRAIN (PCT)	BENDING STRAIN (PCT)	TOTAL STRAIN (PCT)	PERCNT ALLOW (PCT)
105	SEABED	-460.55	-42.67	0.00	560.71	0.572	0.000	61.92	0.00	0.0000	0.0000	0.0000	0.00
106	SEABED	-466.60	-42.67	0.00	566.76	0.572	0.000	61.92	0.00	0.0000	0.0000	0.0000	0.00
107	SEABED	-472.65	-42.67	0.00	572.81	0.572	0.000	61.92	0.00	0.0000	0.0000	0.0000	0.00
108	SEABED	-478.70	-42.67	0.00	578.86	0.572	0.000	61.92	0.00	0.0000	0.0000	0.0000	0.00
109	SEABED	-484.75	-42.67	0.00	584.91	0.572	0.000	61.92	0.00	0.0000	0.0000	0.0000	0.00
110	SEABED	-490.80	-42.67	0.00	590.96	0.572	0.000	61.92	0.00	0.0000	0.0000	0.0000	0.00
111	SEABED	-496.85	-42.67	0.00	597.01	0.572	0.000	61.92	0.00	0.0000	0.0000	0.0000	0.00
112	SEABED	-502.90	-42.67	0.00	603.06	0.572	0.000	61.92	0.00	0.0000	0.0000	0.0000	0.00
113	SEABED	-508.95	-42.67	0.00	609.11	0.572	0.000	61.92	0.00	0.0000	0.0000	0.0000	0.00
114	SEABED	-515.00	-42.67	0.00	615.16	0.572	0.000	61.92	0.00	0.0000	0.0000	0.0000	0.00
115	SEABED	-521.05	-42.67	0.00	621.21	0.572	0.000	61.92	0.00	0.0000	0.0000	0.0000	0.00
116	SEABED	-527.10	-42.67	0.00	627.26	0.572	0.000	61.92	0.00	0.0000	0.0000	0.0000	0.00
117	SEABED	-533.15	-42.67	0.00	633.31	0.572	0.000	61.92	0.00	0.0000	0.0000	0.0000	0.00
118	SEABED	-539.20	-42.67	0.00	639.36	0.572	0.000	61.92	0.00	0.0000	0.0000	0.0000	0.00
119	SEABED	-545.25	-42.67	0.00	645.41	0.572	0.000	61.92	0.00	0.0000	0.0000	0.0000	0.00
120	SEABED	-551.30	-42.67	0.00	651.46	0.572	0.000	61.92	0.00	0.0000	0.0000	0.0000	0.00
121	SEABED	-557.35	-42.67	0.00	657.51	0.572	0.000	61.92	0.00	0.0000	0.0000	0.0000	0.00
122	SEABED	-563.40	-42.67	0.00	663.56	0.572	0.000	61.92	0.00	0.0000	0.0000	0.0000	0.00
123	SEABED	-569.45	-42.67	0.00	669.61	0.572	0.000	61.92	0.00	0.0000	0.0000	0.0000	0.00
124	SEABED	-575.50	-42.67	0.00	675.66	0.572	0.000	61.92	0.00	0.0000	0.0000	0.0000	0.00
125	SEABED	-581.55	-42.67	0.00	681.71	0.480	0.000	61.92	0.00	0.0000	0.0000	0.0000	0.00
126	SEABED	-585.70	-42.67	-0.01	685.86	0.353	0.000	61.92	0.00	0.0000	0.0000	0.0000	0.00
127	SEABED	-589.85	-42.67	-0.12	690.01	0.000	0.000	61.92	0.00	0.0000	0.0000	0.0000	0.00

S T A T I C P I P E C O O R D I N A T E S, F O R C E S A N D S T R A I N S

NODE NO.	PIPE SECTION	X COORD (M)	Y COORD (M)	VERT ANGLE (DEG)	PIPE LENGTH (M)	SUPPORT REACTION (KN)	SEPARA -TION (M)	AXIAL TENSION (KN)	BENDING MOMENT (KN-M)	TENSILE STRAIN (PCT)	BENDING STRAIN (PCT)	TOTAL STRAIN (PCT)	PERCNT ALLOW (PCT)
1	LAYBARGE	96.31	6.41	1.93	0.00	9.927	0.000	0.00	2.74	0.0000	0.0021	0.0021	0.00
3	LAYBARGE	84.28	6.05	1.58	12.04	24.177	0.000	-0.73	-19.25	0.0000	-0.0144	0.0144	0.00
5	LAYBARGE	73.45	5.73	1.90	22.87	24.292	0.000	-1.39	-29.24	-0.0001	-0.0219	0.0219	0.00
7	TENSIONR	60.10	5.24	2.31	36.23	32.193	0.000	70.91	-23.94	0.0033	-0.0179	0.0212	0.00
9	LAYBARGE	51.10	4.87	2.20	45.24	0.000	0.000	70.18	31.01	0.0033	0.0232	0.0265	0.00
10	LAYBARGE	46.45	4.70	1.91	49.89	10.090	0.000	69.87	12.85	0.0033	0.0096	0.0129	0.00
12	LAYBARGE	35.36	4.31	2.62	60.99	29.961	0.000	68.86	-80.48	0.0032	-0.0602	0.0634	0.00
14	LAYBARGE	25.34	3.64	5.23	71.03	38.715	0.000	67.31	-128.38	0.0031	-0.0960	0.0992	0.00
16	LAYBARGE	19.31	3.01	6.51	77.09	0.000	0.000	66.44	-39.35	0.0031	-0.0294	0.0325	0.00
17	LAYBARGE	8.88	1.76	7.20	87.60	30.496	0.000	63.91	-41.80	0.0030	-0.0313	0.0342	0.00
19	LAYBARGE	4.88	1.24	7.40	91.63	0.000	0.000	62.92	7.86	0.0029	0.0059	0.0088	0.00
20	LAYBARGE	3.06	1.01	7.32	93.47	0.000	0.388	62.44	23.49	0.0029	0.0176	0.0205	0.00
24	STINGER	-7.43	-0.26	6.57	104.03	2.559	0.000	60.16	0.00	0.0028	0.0000	0.0028	0.00
26	STINGER	-16.57	0.01	0.17	113.19	4.086	0.000	60.77	0.00	0.0000	0.0000	0.0000	0.00
29	STINGER	-26.48	-0.35	3.93	123.11	3.956	0.000	60.77	0.00	0.0000	0.0000	0.0000	0.00
31	STINGER	-37.36	-1.45	8.31	134.04	5.375	0.000	60.74	0.00	0.0000	0.0000	0.0000	0.00
33	STINGER	-40.33	-2.02	10.82	137.07	0.000	0.186	60.80	0.00	0.0000	0.0000	0.0000	0.00

35	SAGBEND	-46.47	-3.19	10.81	143.32	0.000	0.000	60.80	0.00	0.0000	0.0000	0.0000	0.00
36	SAGBEND	-52.42	-4.32	10.79	149.37	0.000	0.000	60.79	0.00	0.0000	0.0000	0.0000	0.00
37	SAGBEND	-58.36	-5.45	10.78	155.42	0.000	0.000	60.79	0.00	0.0000	0.0000	0.0000	0.00
38	SAGBEND	-64.30	-6.59	10.76	161.47	0.000	0.000	60.79	0.00	0.0000	0.0000	0.0000	0.00
39	SAGBEND	-70.25	-7.71	10.75	167.52	0.000	0.000	60.79	0.00	0.0000	0.0000	0.0000	0.00
40	SAGBEND	-76.19	-8.84	10.73	173.57	0.000	0.000	60.78	0.00	0.0000	0.0000	0.0000	0.00
41	SAGBEND	-82.13	-9.97	10.72	179.62	0.000	0.000	60.78	0.00	0.0000	0.0000	0.0000	0.00
42	SAGBEND	-88.08	-11.09	10.70	185.67	0.000	0.000	60.78	0.00	0.0000	0.0000	0.0000	0.00
43	SAGBEND	-94.02	-12.21	10.69	191.72	0.000	0.000	60.77	0.00	0.0000	0.0000	0.0000	0.00
44	SAGBEND	-99.97	-13.34	10.67	197.77	0.000	0.000	60.77	0.00	0.0000	0.0000	0.0000	0.00
45	SAGBEND	-105.91	-14.46	10.66	203.82	0.000	0.000	60.77	0.00	0.0000	0.0000	0.0000	0.00
46	SAGBEND	-111.86	-15.57	10.65	209.87	0.000	0.000	60.77	0.00	0.0000	0.0000	0.0000	0.00
47	SAGBEND	-117.81	-16.69	10.63	215.92	0.000	0.000	60.76	0.00	0.0000	0.0000	0.0000	0.00
48	SAGBEND	-123.75	-17.81	10.62	221.97	0.000	0.000	60.76	0.00	0.0000	0.0000	0.0000	0.00
49	SAGBEND	-129.70	-18.92	10.60	228.02	0.000	0.000	60.76	0.00	0.0000	0.0000	0.0000	0.00
50	SAGBEND	-135.65	-20.03	10.59	234.07	0.000	0.000	60.75	0.00	0.0000	0.0000	0.0000	0.00
51	SAGBEND	-141.59	-21.14	10.57	240.12	0.000	0.000	60.75	0.00	0.0000	0.0000	0.0000	0.00
52	SAGBEND	-147.54	-22.25	10.56	246.17	0.000	0.000	60.75	0.00	0.0000	0.0000	0.0000	0.00
53	SAGBEND	-153.49	-23.36	10.54	252.22	0.000	0.000	60.75	0.00	0.0000	0.0000	0.0000	0.00
54	SAGBEND	-159.44	-24.47	10.53	258.27	0.000	0.000	60.74	0.00	0.0000	0.0000	0.0000	0.00
55	SAGBEND	-165.39	-25.57	10.51	264.32	0.000	0.000	60.74	0.00	0.0000	0.0000	0.0000	0.00
56	SAGBEND	-171.33	-26.67	10.50	270.37	0.000	0.000	60.74	0.00	0.0000	0.0000	0.0000	0.00
57	SAGBEND	-177.28	-27.78	10.48	276.42	0.000	0.000	60.73	0.00	0.0000	0.0000	0.0000	0.00
58	SAGBEND	-183.23	-28.88	10.47	282.47	0.000	0.000	60.73	0.00	0.0000	0.0000	0.0000	0.00
59	SAGBEND	-189.18	-29.97	10.45	288.52	0.000	0.000	60.73	0.00	0.0000	0.0000	0.0000	0.00
60	SAGBEND	-195.13	-31.07	10.44	294.57	0.000	0.000	60.73	0.00	0.0000	0.0000	0.0000	0.00

S T A T I C P I P E C O O R D I N A T E S, F O R C E S A N D S T R A I N S

NODE NO.	PIPE SECTION	X COORD (M)	Y COORD (M)	VERT ANGLE (DEG)	PIPE LENGTH (M)	SUPPORT REACTION (KN)	SEPARA -TION (M)	AXIAL TENSION (KN)	BENDING MOMENT (KN-M)	TENSILE STRAIN (PCT)	BENDING STRAIN (PCT)	TOTAL STRAIN (PCT)	PERCNT ALLOW (PCT)
61	SAGBEND	-200.55	-32.07	10.43	300.08	0.000	0.000	60.72	0.00	0.0000	0.0000	0.0000	0.00
62	SAGBEND	-207.04	-33.23	9.85	306.68	0.000	0.000	60.61	0.00	0.0000	0.0000	0.0000	0.00
63	SAGBEND	-213.00	-34.24	9.31	312.73	0.000	0.000	60.52	0.00	0.0000	0.0000	0.0000	0.00
64	SAGBEND	-218.98	-35.19	8.78	318.78	0.000	0.000	60.43	0.00	0.0000	0.0000	0.0000	0.00
65	SAGBEND	-224.96	-36.08	8.24	324.83	0.000	0.000	60.34	0.00	0.0000	0.0000	0.0000	0.00
66	SAGBEND	-230.95	-36.92	7.70	330.88	0.000	0.000	60.26	0.00	0.0000	0.0000	0.0000	0.00
67	SAGBEND	-236.95	-37.70	7.16	336.93	0.000	0.000	60.19	0.00	0.0000	0.0000	0.0000	0.00
68	SAGBEND	-242.96	-38.43	6.62	342.98	0.000	0.000	60.12	0.00	0.0000	0.0000	0.0000	0.00
69	SAGBEND	-248.97	-39.10	6.08	349.03	0.000	0.000	60.06	0.00	0.0000	0.0000	0.0000	0.00
70	SAGBEND	-254.99	-39.71	5.54	355.08	0.000	0.000	60.00	0.00	0.0000	0.0000	0.0000	0.00
71	SAGBEND	-261.01	-40.27	4.99	361.13	0.000	0.000	59.95	0.00	0.0000	0.0000	0.0000	0.00
72	SAGBEND	-267.04	-40.76	4.45	367.18	0.000	0.000	59.90	0.00	0.0000	0.0000	0.0000	0.00
73	SAGBEND	-273.08	-41.20	3.90	373.23	0.000	0.000	59.86	0.00	0.0000	0.0000	0.0000	0.00
74	SAGBEND	-279.12	-41.59	3.35	379.28	0.000	0.000	59.82	0.00	0.0000	0.0000	0.0000	0.00
75	SAGBEND	-285.16	-41.91	2.81	385.33	0.000	0.000	59.79	0.00	0.0000	0.0000	0.0000	0.00
76	SAGBEND	-291.20	-42.18	2.26	391.38	0.000	0.000	59.77	0.00	0.0000	0.0000	0.0000	0.00
77	SAGBEND	-297.25	-42.39	1.71	397.43	0.000	0.000	59.75	0.00	0.0000	0.0000	0.0000	0.00
78	SAGBEND	-303.30	-42.54	1.16	403.48	0.000	0.000	59.73	0.00	0.0000	0.0000	0.0000	0.00
79	SAGBEND	-309.34	-42.64	0.61	409.53	0.000	0.000	59.72	0.00	0.0000	0.0000	0.0000	0.00
80	SEABED	-315.39	-42.67	0.07	415.58	0.234	0.000	59.72	0.00	0.0000	0.0000	0.0000	0.00
81	SEABED	-321.44	-42.67	0.00	421.63	0.556	0.000	59.72	0.00	0.0000	0.0000	0.0000	0.00
82	SEABED	-327.49	-42.67	0.00	427.68	0.572	0.000	59.72	0.00	0.0000	0.0000	0.0000	0.00
83	SEABED	-333.54	-42.67	0.00	433.73	0.572	0.000	59.72	0.00	0.0000	0.0000	0.0000	0.00
84	SEABED	-339.59	-42.67	0.00	439.78	0.572	0.000	59.72	0.00	0.0000	0.0000	0.0000	0.00
85	SEABED	-345.64	-42.67	0.00	445.83	0.572	0.000	59.72	0.00	0.0000	0.0000	0.0000	0.00
86	SEABED	-351.69	-42.67	0.00	451.88	0.572	0.000	59.72	0.00	0.0000	0.0000	0.0000	0.00
87	SEABED	-357.75	-42.67	0.00	457.93	0.572	0.000	59.72	0.00	0.0000	0.0000	0.0000	0.00
88	SEABED	-363.80	-42.67	0.00	463.98	0.572	0.000	59.72	0.00	0.0000	0.0000	0.0000	0.00
89	SEABED	-369.85	-42.67	0.00	470.03	0.572	0.000	59.72	0.00	0.0000	0.0000	0.0000	0.00
90	SEABED	-375.90	-42.67	0.00	476.08	0.572	0.000	59.72	0.00	0.0000	0.0000	0.0000	0.00
91	SEABED	-381.95	-42.67	0.00	482.13	0.572	0.000	59.72	0.00	0.0000	0.0000	0.0000	0.00
92	SEABED	-388.00	-42.67	0.00	488.18	0.572	0.000	59.72	0.00	0.0000	0.0000	0.0000	0.00
93	SEABED	-394.05	-42.67	0.00	494.23	0.572	0.000	59.72	0.00	0.0000	0.0000	0.0000	0.00
94	SEABED	-400.10	-42.67	0.00	500.28	0.572	0.000	59.72	0.00	0.0000	0.0000	0.0000	0.00
95	SEABED	-406.15	-42.67	0.00	506.33	0.572	0.000	59.72	0.00	0.0000	0.0000	0.0000	0.00
96	SEABED	-412.20	-42.67	0.00	512.38	0.572	0.000	59.72	0.00	0.0000	0.0000	0.0000	0.00
97	SEABED	-418.25	-42.67	0.00	518.43	0.572	0.000	59.72	0.00	0.0000	0.0000	0.0000	0.00
98	SEABED	-424.30	-42.67	0.00	524.48	0.572	0.000	59.72	0.00	0.0000	0.0000	0.0000	0.00
99	SEABED	-430.35	-42.67	0.00	530.53	0.572	0.000	59.72	0.00	0.0000	0.0000	0.0000	0.00
100	SEABED	-436.40	-42.67	0.00	536.58	0.572	0.000	59.72	0.00	0.0000	0.0000	0.0000	0.00
101	SEABED	-442.45	-42.67	0.00	542.63	0.572	0.000	59.72	0.00	0.0000	0.0000	0.0000	0.00
102	SEABED	-448.50	-42.67	0.00	548.68	0.572	0.000	59.72	0.00	0.0000	0.0000	0.0000	0.00
103	SEABED	-454.55	-42.67	0.00	554.73	0.572	0.000	59.72	0.00	0.0000	0.0000	0.0000	0.00
104	SEABED	-460.60	-42.67	0.00	560.78	0.572	0.000	59.72	0.00	0.0000	0.0000	0.0000	0.00

S T A T I C P I P E C O O R D I N A T E S, F O R C E S A N D S T R A I N S

NODE NO.	PIPE SECTION	X COORD (M)	Y COORD (M)	VERT ANGLE (DEG)	PIPE LENGTH (M)	SUPPORT REACTION (KN)	SEPARA -TION (M)	AXIAL TENSION (KN)	BENDING MOMENT (KN-M)	TENSILE STRAIN (PCT)	BENDING STRAIN (PCT)	TOTAL STRAIN (PCT)	PERCNT ALLOW (PCT)
105	SEABED	-466.65	-42.67	0.00	566.83	0.572	0.000	59.72	0.00	0.0000	0.0000	0.0000	0.00
106	SEABED	-472.70	-42.67	0.00	572.88	0.572	0.000	59.72	0.00	0.0000	0.0000	0.0000	0.00
107	SEABED	-478.75	-42.67	0.00	578.93	0.572	0.000	59.72	0.00	0.0000	0.0000	0.0000	0.00
108	SEABED	-484.80	-42.67	0.00	584.98	0.572	0.000	59.72	0.00	0.0000	0.0000	0.0000	0.00
109	SEABED	-490.85	-42.67	0.00	591.03	0.572	0.000	59.72	0.00	0.0000	0.0000	0.0000	0.00
110	SEABED	-496.90	-42.67	0.00	597.08	0.572	0.000	59.72	0.00	0.0000	0.0000	0.0000	0.00
111	SEABED	-502.95	-42.67	0.00	603.13	0.572	0.000	59.72	0.00	0.0000	0.0000	0.0000	0.00
112	SEABED	-509.00	-42.67	0.00	609.18	0.572	0.000	59.72	0.00	0.0000	0.0000	0.0000	0.00
113	SEABED	-515.05	-42.67	0.00	615.23	0.572	0.000	59.72	0.00	0.0000	0.0000	0.0000	0.00
114	SEABED	-521.10	-42.67	0.00	621.28	0.572	0.000	59.72	0.00	0.0000	0.0000	0.0000	0.00
115	SEABED	-527.15	-42.67	0.00	627.33	0.572	0.000	59.72	0.00	0.0000	0.0000	0.0000	0.00
116	SEABED	-533.20	-42.67	0.00	633.38	0.572	0.000	59.72	0.00	0.0000	0.0000	0.0000	0.00
117	SEABED	-539.25	-42.67	0.00	639.43	0.572	0.000	59.72	0.00	0.0000	0.0000	0.0000	0.00
118	SEABED	-545.30	-42.67	0.00	645.48	0.572	0.000	59.72	0.00	0.0000	0.0000	0.0000	0.00
119	SEABED	-551.35	-42.67	0.00	651.53	0.572	0.000	59.72	0.00	0.0000	0.0000	0.0000	0.00
120	SEABED	-557.40	-42.67	0.00	657.58	0.572	0.000	59.72	0.00	0.0000	0.0000	0.0000	0.00
121	SEABED	-563.45	-42.67	0.00	663.63	0.572	0.000	59.72	0.00	0.0000	0.0000	0.0000	0.00
122	SEABED	-569.50	-42.67	0.00	669.68	0.572	0.000	59.72	0.00	0.0000	0.0000	0.0000	0.00
123	SEABED	-575.55	-42.67	0.00	675.73	0.572	0.000	59.72	0.00	0.0000	0.0000	0.0000	0.00
124	SEABED	-581.60	-42.67	0.00	681.78	0.572	0.000	59.72	0.00	0.0000	0.0000	0.0000	0.00
125	SEABED	-587.65	-42.67	0.00	687.83	0.572	0.000	59.72	0.00	0.0000	0.0000	0.0000	0.00
126	SEABED	-593.70	-42.67	0.00	693.88	0.427	0.000	59.72	0.00	0.0000	0.0000	0.0000	0.00
127	SEABED	-596.80	-42.67	-0.02	696.98	0.246	0.000	59.72	0.00	0.0000	0.0000	0.0000	0.00
128	SEABED	-599.91	-42.67	-0.13	700.09	0.000	0.000	59.72	0.00	0.0000	0.0000	0.0000	0.00

S T A T I C P I P E C O O R D I N A T E S, F O R C E S A N D S T R A I N S

NODE NO.	PIPE SECTION	X COORD (M)	Y COORD (M)	VERT ANGLE (DEG)	PIPE LENGTH (M)	SUPPORT REACTION (KN)	SEPARA -TION (M)	AXIAL TENSION (KN)	BENDING MOMENT (KN-M)	TENSILE STRAIN (PCT)	BENDING STRAIN (PCT)	TOTAL STRAIN (PCT)	PERCNT ALLOW (PCT)
1	LAYBARGE	96.31	6.41	1.93	0.00	9.928	0.000	0.00	2.74	0.0000	0.0021	0.0021	0.00
3	LAYBARGE	84.28	6.05	1.58	12.04	24.174	0.000	-0.73	-19.24	0.0000	-0.0144	0.0144	0.00
5	LAYBARGE	73.45	5.73	1.90	22.87	24.301	0.000	-1.39	-29.26	-0.0001	-0.0219	0.0219	0.00
7	TENSIONR	60.10	5.24	2.31	36.23	32.183	0.000	82.61	-23.88	0.0038	-0.0179	0.0217	0.00
9	LAYBARGE	51.10	4.87	2.20	45.24	0.000	0.000	81.88	30.87	0.0038	0.0231	0.0269	0.00
10	LAYBARGE	46.45	4.70	1.91	49.89	9.993	0.000	81.57	12.92	0.0038	0.0097	0.0135	0.00
12	LAYBARGE	35.36	4.31	2.62	60.99	30.345	0.000	80.56	-80.51	0.0037	-0.0602	0.0640	0.00
14	LAYBARGE	25.34	3.64	5.23	71.03	39.328	0.000	79.01	-128.83	0.0037	-0.0964	0.1000	0.00
16	LAYBARGE	19.31	3.01	6.51	77.09	0.000	0.000	78.14	-39.13	0.0036	-0.0293	0.0329	0.00
17	LAYBARGE	8.88	1.76	7.20	87.60	30.572	0.000	75.60	-41.83	0.0035	-0.0313	0.0348	0.00
19	LAYBARGE	4.88	1.24	7.39	91.63	0.000	0.000	74.62	7.61	0.0035	0.0057	0.0092	0.00
20	LAYBARGE	3.06	1.01	7.32	93.47	0.000	0.388	74.14	23.13	0.0034	0.0173	0.0207	0.00
24	STINGER	-7.43	-0.26	6.58	104.04	0.752	0.000	71.86	0.00	0.0033	0.0000	0.0033	0.00
26	STINGER	-16.57	0.01	0.34	113.19	5.282	0.000	72.58	0.00	0.0000	0.0000	0.0000	0.00
29	STINGER	-26.48	-0.40	4.41	123.11	5.104	0.000	72.58	0.00	0.0000	0.0000	0.0000	0.00
31	STINGER	-37.34	-1.63	8.38	134.04	5.010	0.000	72.58	0.00	0.0000	0.0000	0.0000	0.00
33	STINGER	-40.32	-2.17	10.35	137.07	0.000	0.244	72.62	0.00	0.0000	0.0000	0.0000	0.00
35	SAGBEND	-46.47	-3.29	10.33	143.32	0.000	0.000	72.62	0.00	0.0000	0.0000	0.0000	0.00
36	SAGBEND	-52.42	-4.38	10.32	149.37	0.000	0.000	72.62	0.00	0.0000	0.0000	0.0000	0.00
37	SAGBEND	-58.38	-5.46	10.31	155.42	0.000	0.000	72.61	0.00	0.0000	0.0000	0.0000	0.00
38	SAGBEND	-64.33	-6.54	10.30	161.47	0.000	0.000	72.61	0.00	0.0000	0.0000	0.0000	0.00
39	SAGBEND	-70.28	-7.62	10.28	167.52	0.000	0.000	72.61	0.00	0.0000	0.0000	0.0000	0.00
40	SAGBEND	-76.23	-8.70	10.27	173.57	0.000	0.000	72.61	0.00	0.0000	0.0000	0.0000	0.00
41	SAGBEND	-82.19	-9.78	10.26	179.62	0.000	0.000	72.60	0.00	0.0000	0.0000	0.0000	0.00
42	SAGBEND	-88.14	-10.86	10.25	185.67	0.000	0.000	72.60	0.00	0.0000	0.0000	0.0000	0.00
43	SAGBEND	-94.09	-11.93	10.23	191.72	0.000	0.000	72.60	0.00	0.0000	0.0000	0.0000	0.00
44	SAGBEND	-100.05	-13.01	10.22	197.77	0.000	0.000	72.60	0.00	0.0000	0.0000	0.0000	0.00
45	SAGBEND	-106.00	-14.08	10.21	203.82	0.000	0.000	72.59	0.00	0.0000	0.0000	0.0000	0.00
46	SAGBEND	-111.96	-15.15	10.20	209.87	0.000	0.000	72.59	0.00	0.0000	0.0000	0.0000	0.00
47	SAGBEND	-117.91	-16.22	10.19	215.92	0.000	0.000	72.59	0.00	0.0000	0.0000	0.0000	0.00
48	SAGBEND	-123.87	-17.29	10.17	221.97	0.000	0.000	72.58	0.00	0.0000	0.0000	0.0000	0.00
49	SAGBEND	-129.82	-18.36	10.16	228.02	0.000	0.000	72.58	0.00	0.0000	0.0000	0.0000	0.00
50	SAGBEND	-135.78	-19.43	10.15	234.07	0.000	0.000	72.58	0.00	0.0000	0.0000	0.0000	0.00

51	SAGBEND	-141.73	-20.49	10.14	240.12	0.000	0.000	72.58	0.00	0.0000	0.0000	0.0000	0.00
52	SAGBEND	-147.69	-21.56	10.12	246.17	0.000	0.000	72.57	0.00	0.0000	0.0000	0.0000	0.00
53	SAGBEND	-153.64	-22.62	10.11	252.22	0.000	0.000	72.57	0.00	0.0000	0.0000	0.0000	0.00
54	SAGBEND	-159.60	-23.68	10.10	258.27	0.000	0.000	72.57	0.00	0.0000	0.0000	0.0000	0.00
55	SAGBEND	-165.56	-24.74	10.09	264.32	0.000	0.000	72.56	0.00	0.0000	0.0000	0.0000	0.00
56	SAGBEND	-171.51	-25.80	10.08	270.37	0.000	0.000	72.56	0.00	0.0000	0.0000	0.0000	0.00
57	SAGBEND	-177.47	-26.86	10.06	276.42	0.000	0.000	72.56	0.00	0.0000	0.0000	0.0000	0.00
58	SAGBEND	-183.43	-27.91	10.05	282.47	0.000	0.000	72.56	0.00	0.0000	0.0000	0.0000	0.00
59	SAGBEND	-189.38	-28.97	10.04	288.52	0.000	0.000	72.55	0.00	0.0000	0.0000	0.0000	0.00
60	SAGBEND	-195.34	-30.02	10.03	294.57	0.000	0.000	72.55	0.00	0.0000	0.0000	0.0000	0.00

S T A T I C P I P E C O O R D I N A T E S, F O R C E S A N D S T R A I N S

NODE NO.	PIPE SECTION	X COORD (M)	Y COORD (M)	VERT ANGLE (DEG)	PIPE LENGTH (M)	SUPPORT REACTION (KN)	SEPARA -TION (M)	AXIAL TENSION (KN)	BENDING MOMENT (KN-M)	TENSILE STRAIN (PCT)	BENDING STRAIN (PCT)	TOTAL STRAIN (PCT)	PERCNT ALLOW (PCT)
61	SAGBEND	-200.77	-30.98	10.01	300.08	0.000	0.000	72.55	0.00	0.0000	0.0000	0.0000	0.00
62	SAGBEND	-207.26	-32.10	9.53	306.67	0.000	0.000	72.44	0.00	0.0000	0.0000	0.0000	0.00
63	SAGBEND	-213.23	-33.08	9.08	312.72	0.000	0.000	72.35	0.00	0.0000	0.0000	0.0000	0.00
64	SAGBEND	-219.21	-34.01	8.63	318.77	0.000	0.000	72.26	0.00	0.0000	0.0000	0.0000	0.00
65	SAGBEND	-225.20	-34.89	8.19	324.82	0.000	0.000	72.18	0.00	0.0000	0.0000	0.0000	0.00
66	SAGBEND	-231.19	-35.73	7.74	330.87	0.000	0.000	72.10	0.00	0.0000	0.0000	0.0000	0.00
67	SAGBEND	-237.19	-36.52	7.28	336.93	0.000	0.000	72.02	0.00	0.0000	0.0000	0.0000	0.00
68	SAGBEND	-243.19	-37.27	6.83	342.98	0.000	0.000	71.95	0.00	0.0000	0.0000	0.0000	0.00
69	SAGBEND	-249.20	-37.96	6.38	349.03	0.000	0.000	71.89	0.00	0.0000	0.0000	0.0000	0.00
70	SAGBEND	-255.21	-38.61	5.93	355.08	0.000	0.000	71.83	0.00	0.0000	0.0000	0.0000	0.00
71	SAGBEND	-261.23	-39.21	5.47	361.13	0.000	0.000	71.77	0.00	0.0000	0.0000	0.0000	0.00
72	SAGBEND	-267.26	-39.77	5.02	367.18	0.000	0.000	71.72	0.00	0.0000	0.0000	0.0000	0.00
73	SAGBEND	-273.29	-40.27	4.56	373.23	0.000	0.000	71.67	0.00	0.0000	0.0000	0.0000	0.00
74	SAGBEND	-279.32	-40.73	4.11	379.28	0.000	0.000	71.63	0.00	0.0000	0.0000	0.0000	0.00
75	SAGBEND	-285.36	-41.14	3.65	385.33	0.000	0.000	71.59	0.00	0.0000	0.0000	0.0000	0.00
76	SAGBEND	-291.40	-41.50	3.19	391.38	0.000	0.000	71.55	0.00	0.0000	0.0000	0.0000	0.00
77	SAGBEND	-297.44	-41.81	2.73	397.43	0.000	0.000	71.52	0.00	0.0000	0.0000	0.0000	0.00
78	SAGBEND	-303.48	-42.07	2.28	403.48	0.000	0.000	71.50	0.00	0.0000	0.0000	0.0000	0.00
79	SAGBEND	-309.53	-42.29	1.82	409.53	0.000	0.000	71.48	0.00	0.0000	0.0000	0.0000	0.00
80	SAGBEND	-315.58	-42.46	1.36	415.58	0.000	0.000	71.46	0.00	0.0000	0.0000	0.0000	0.00
81	SAGBEND	-321.63	-42.58	0.90	421.63	0.000	0.000	71.45	0.00	0.0000	0.0000	0.0000	0.00
82	SAGBEND	-327.67	-42.65	0.45	427.68	0.003	0.000	71.45	0.00	0.0000	0.0000	0.0000	0.00
83	SEABED	-333.72	-42.67	0.03	433.73	0.314	0.000	71.44	-0.01	0.0000	0.0000	0.0000	0.00
84	SEABED	-339.77	-42.67	0.00	439.78	0.561	0.000	71.44	0.00	0.0000	0.0000	0.0000	0.00
85	SEABED	-345.82	-42.67	0.00	445.83	0.572	0.000	71.44	0.00	0.0000	0.0000	0.0000	0.00
86	SEABED	-351.87	-42.67	0.00	451.88	0.572	0.000	71.44	0.00	0.0000	0.0000	0.0000	0.00
87	SEABED	-357.92	-42.67	0.00	457.93	0.572	0.000	71.44	0.00	0.0000	0.0000	0.0000	0.00
88	SEABED	-363.97	-42.67	0.00	463.98	0.572	0.000	71.44	0.00	0.0000	0.0000	0.0000	0.00
89	SEABED	-370.03	-42.67	0.00	470.03	0.572	0.000	71.44	0.00	0.0000	0.0000	0.0000	0.00
90	SEABED	-376.08	-42.67	0.00	476.08	0.572	0.000	71.44	0.00	0.0000	0.0000	0.0000	0.00
91	SEABED	-382.13	-42.67	0.00	482.13	0.572	0.000	71.44	0.00	0.0000	0.0000	0.0000	0.00
92	SEABED	-388.18	-42.67	0.00	488.18	0.572	0.000	71.44	0.00	0.0000	0.0000	0.0000	0.00
93	SEABED	-394.23	-42.67	0.00	494.23	0.572	0.000	71.44	0.00	0.0000	0.0000	0.0000	0.00
94	SEABED	-400.28	-42.67	0.00	500.28	0.572	0.000	71.44	0.00	0.0000	0.0000	0.0000	0.00
95	SEABED	-406.33	-42.67	0.00	506.33	0.572	0.000	71.44	0.00	0.0000	0.0000	0.0000	0.00
96	SEABED	-412.38	-42.67	0.00	512.38	0.572	0.000	71.44	0.00	0.0000	0.0000	0.0000	0.00
97	SEABED	-418.43	-42.67	0.00	518.43	0.572	0.000	71.44	0.00	0.0000	0.0000	0.0000	0.00
98	SEABED	-424.48	-42.67	0.00	524.48	0.572	0.000	71.44	0.00	0.0000	0.0000	0.0000	0.00
99	SEABED	-430.53	-42.67	0.00	530.53	0.572	0.000	71.44	0.00	0.0000	0.0000	0.0000	0.00
100	SEABED	-436.58	-42.67	0.00	536.58	0.572	0.000	71.44	0.00	0.0000	0.0000	0.0000	0.00
101	SEABED	-442.63	-42.67	0.00	542.63	0.572	0.000	71.44	0.00	0.0000	0.0000	0.0000	0.00
102	SEABED	-448.68	-42.67	0.00	548.68	0.572	0.000	71.44	0.00	0.0000	0.0000	0.0000	0.00
103	SEABED	-454.73	-42.67	0.00	554.73	0.572	0.000	71.44	0.00	0.0000	0.0000	0.0000	0.00
104	SEABED	-460.78	-42.67	0.00	560.78	0.572	0.000	71.44	0.00	0.0000	0.0000	0.0000	0.00

S T A T I C P I P E C O O R D I N A T E S, F O R C E S A N D S T R A I N S

NODE NO.	PIPE SECTION	X COORD (M)	Y COORD (M)	VERT ANGLE (DEG)	PIPE LENGTH (M)	SUPPORT REACTION (KN)	SEPARA -TION (M)	AXIAL TENSION (KN)	BENDING MOMENT (KN-M)	TENSILE STRAIN (PCT)	BENDING STRAIN (PCT)	TOTAL STRAIN (PCT)	PERCNT ALLOW (PCT)
105	SEABED	-466.83	-42.67	0.00	566.83	0.572	0.000	71.44	0.00	0.0000	0.0000	0.0000	0.00
106	SEABED	-472.88	-42.67	0.00	572.88	0.572	0.000	71.44	0.00	0.0000	0.0000	0.0000	0.00
107	SEABED	-478.93	-42.67	0.00	578.93	0.572	0.000	71.44	0.00	0.0000	0.0000	0.0000	0.00
108	SEABED	-484.98	-42.67	0.00	584.98	0.572	0.000	71.44	0.00	0.0000	0.0000	0.0000	0.00
109	SEABED	-491.03	-42.67	0.00	591.03	0.572	0.000	71.44	0.00	0.0000	0.0000	0.0000	0.00
110	SEABED	-497.08	-42.67	0.00	597.08	0.572	0.000	71.44	0.00	0.0000	0.0000	0.0000	0.00
111	SEABED	-503.13	-42.67	0.00	603.13	0.572	0.000	71.44	0.00	0.0000	0.0000	0.0000	0.00
112	SEABED	-509.18	-42.67	0.00	609.18	0.572	0.000	71.44	0.00	0.0000	0.0000	0.0000	0.00
113	SEABED	-515.23	-42.67	0.00	615.23	0.572	0.000	71.44	0.00	0.0000	0.0000	0.0000	0.00
114	SEABED	-521.28	-42.67	0.00	621.28	0.572	0.000	71.44	0.00	0.0000	0.0000	0.0000	0.00
115	SEABED	-527.33	-42.67	0.00	627.33	0.572	0.000	71.44	0.00	0.0000	0.0000	0.0000	0.00
116	SEABED	-533.38	-42.67	0.00	633.38	0.572	0.000	71.44	0.00	0.0000	0.0000	0.0000	0.00
117	SEABED	-539.43	-42.67	0.00	639.43	0.572	0.000	71.44	0.00	0.0000	0.0000	0.0000	0.00
118	SEABED	-545.48	-42.67	0.00	645.48	0.572	0.000	71.44	0.00	0.0000	0.0000	0.0000	0.00
119	SEABED	-551.53	-42.67	0.00	651.53	0.572	0.000	71.44	0.00	0.0000	0.0000	0.0000	0.00
120	SEABED	-557.58	-42.67	0.00	657.58	0.572	0.000	71.44	0.00	0.0000	0.0000	0.0000	0.00
121	SEABED	-563.63	-42.67	0.00	663.63	0.572	0.000	71.44	0.00	0.0000	0.0000	0.0000	0.00
122	SEABED	-569.68	-42.67	0.00	669.68	0.572	0.000	71.44	0.00	0.0000	0.0000	0.0000	0.00
123	SEABED	-575.73	-42.67	0.00	675.73	0.572	0.000	71.44	0.00	0.0000	0.0000	0.0000	0.00
124	SEABED	-581.78	-42.67	0.00	681.78	0.572	0.000	71.44	0.00	0.0000	0.0000	0.0000	0.00
125	SEABED	-587.83	-42.67	0.00	687.83	0.571	0.000	71.44	0.00	0.0000	0.0000	0.0000	0.00
126	SEABED	-593.88	-42.67	0.00	693.88	0.424	0.000	71.44	0.00	0.0000	0.0000	0.0000	0.00
127	SEABED	-596.98	-42.67	-0.02	696.98	0.239	0.000	71.44	0.00	0.0000	0.0000	0.0000	0.00
128	SEABED	-600.08	-42.67	-0.12	700.09	0.000	0.000	71.44	0.00	0.0000	0.0000	0.0000	0.00

S T A T I C P I P E C O O R D I N A T E S, F O R C E S A N D S T R A I N S

NODE NO.	PIPE SECTION	X COORD (M)	Y COORD (M)	VERT ANGLE (DEG)	PIPE LENGTH (M)	SUPPORT REACTION (KN)	SEPARA -TION (M)	AXIAL TENSION (KN)	BENDING MOMENT (KN-M)	TENSILE STRAIN (PCT)	BENDING STRAIN (PCT)	TOTAL STRAIN (PCT)	PERCNT ALLOW (PCT)
1	LAYBARGE	96.31	6.41	1.93	0.00	9.929	0.000	0.00	2.74	0.0000	0.0021	0.0021	0.00
3	LAYBARGE	84.28	6.05	1.58	12.04	24.167	0.000	-0.73	-19.23	0.0000	-0.0144	0.0144	0.00
5	LAYBARGE	73.45	5.73	1.90	22.87	24.324	0.000	-1.39	-29.30	-0.0001	-0.0219	0.0220	0.00
7	TENSIONR	60.10	5.24	2.31	36.23	32.102	0.000	82.62	-23.76	0.0038	-0.0178	0.0216	0.00
9	LAYBARGE	51.10	4.87	2.20	45.24	0.000	0.000	81.89	30.48	0.0038	0.0228	0.0266	0.00
10	LAYBARGE	46.45	4.70	1.92	49.89	10.395	0.000	81.57	12.32	0.0038	0.0092	0.0130	0.00
12	LAYBARGE	35.36	4.31	2.59	60.99	28.498	0.000	80.58	-78.87	0.0037	-0.0590	0.0627	0.00
14	LAYBARGE	25.34	3.64	5.32	71.03	43.962	0.000	78.93	-139.71	0.0037	-0.1045	0.1082	0.00
16	LAYBARGE	19.32	2.99	6.65	77.09	0.000	0.000	78.12	-33.49	0.0036	-0.0250	0.0287	0.00
17	LAYBARGE	8.88	1.76	6.75	87.60	30.506	0.000	75.66	-2.27	0.0035	-0.0017	0.0052	0.00
19	LAYBARGE	4.87	1.29	6.45	91.63	0.000	0.000	74.64	63.15	0.0035	0.0472	0.0507	0.00
20	LAYBARGE	3.05	1.09	6.10	93.47	0.000	0.471	74.15	86.88	0.0034	0.0650	0.0684	0.00
24	STINGER	-7.46	0.24	2.95	104.02	0.000	0.536	72.33	115.62	0.0034	0.0865	0.0898	0.00
26	STINGER	-16.58	-0.06	1.35	113.13	21.411	0.000	72.08	0.00	0.0034	0.0000	0.0034	0.00
29	STINGER	-26.46	-0.46	4.14	123.03	4.607	0.000	72.05	0.00	0.0000	0.0000	0.0000	0.00
31	STINGER	-37.34	-1.60	8.01	133.96	5.166	0.000	72.04	0.00	0.0000	0.0000	0.0000	0.00
33	STINGER	-40.32	-2.13	10.05	136.99	0.000	0.236	72.08	0.00	0.0000	0.0000	0.0000	0.00
35	SAGBEND	-46.58	-3.24	10.04	143.35	0.000	0.000	72.08	0.00	0.0000	0.0000	0.0000	0.00
36	SAGBEND	-52.54	-4.29	10.02	149.40	0.000	0.000	72.07	0.00	0.0000	0.0000	0.0000	0.00
37	SAGBEND	-58.49	-5.34	10.01	155.45	0.000	0.000	72.07	0.00	0.0000	0.0000	0.0000	0.00
38	SAGBEND	-64.45	-6.39	10.00	161.50	0.000	0.000	72.07	0.00	0.0000	0.0000	0.0000	0.00
39	SAGBEND	-70.41	-7.44	9.98	167.55	0.000	0.000	72.07	0.00	0.0000	0.0000	0.0000	0.00
40	SAGBEND	-76.37	-8.49	9.97	173.60	0.000	0.000	72.06	0.00	0.0000	0.0000	0.0000	0.00
41	SAGBEND	-82.33	-9.54	9.96	179.65	0.000	0.000	72.06	0.00	0.0000	0.0000	0.0000	0.00
42	SAGBEND	-88.29	-10.58	9.95	185.70	0.000	0.000	72.06	0.00	0.0000	0.0000	0.0000	0.00
43	SAGBEND	-94.25	-11.63	9.93	191.75	0.000	0.000	72.06	0.00	0.0000	0.0000	0.0000	0.00
44	SAGBEND	-100.21	-12.67	9.92	197.80	0.000	0.000	72.05	0.00	0.0000	0.0000	0.0000	0.00
45	SAGBEND	-106.17	-13.71	9.91	203.85	0.000	0.000	72.05	0.00	0.0000	0.0000	0.0000	0.00
46	SAGBEND	-112.13	-14.75	9.90	209.90	0.000	0.000	72.05	0.00	0.0000	0.0000	0.0000	0.00
47	SAGBEND	-118.09	-15.79	9.89	215.95	0.000	0.000	72.04	0.00	0.0000	0.0000	0.0000	0.00
48	SAGBEND	-124.05	-16.83	9.87	222.00	0.000	0.000	72.04	0.00	0.0000	0.0000	0.0000	0.00
49	SAGBEND	-130.01	-17.87	9.86	228.05	0.000	0.000	72.04	0.00	0.0000	0.0000	0.0000	0.00
50	SAGBEND	-135.97	-18.90	9.85	234.10	0.000	0.000	72.04	0.00	0.0000	0.0000	0.0000	0.00
51	SAGBEND	-141.93	-19.94	9.84	240.15	0.000	0.000	72.03	0.00	0.0000	0.0000	0.0000	0.00
52	SAGBEND	-147.89	-20.97	9.82	246.20	0.000	0.000	72.03	0.00	0.0000	0.0000	0.0000	0.00
53	SAGBEND	-153.85	-22.00	9.81	252.25	0.000	0.000	72.03	0.00	0.0000	0.0000	0.0000	0.00
54	SAGBEND	-159.81	-23.03	9.80	258.30	0.000	0.000	72.03	0.00	0.0000	0.0000	0.0000	0.00
55	SAGBEND	-165.77	-24.06	9.79	264.35	0.000	0.000	72.02	0.00	0.0000	0.0000	0.0000	0.00
56	SAGBEND	-171.74	-25.09	9.77	270.40	0.000	0.000	72.02	0.00	0.0000	0.0000	0.0000	0.00
57	SAGBEND	-177.70	-26.11	9.76	276.45	0.000	0.000	72.02	0.00	0.0000	0.0000	0.0000	0.00
58	SAGBEND	-183.66	-27.14	9.75	282.50	0.000	0.000	72.01	0.00	0.0000	0.0000	0.0000	0.00
59	SAGBEND	-189.62	-28.16	9.74	288.55	0.000	0.000	72.01	0.00	0.0000	0.0000	0.0000	0.00
60	SAGBEND	-195.59	-29.19	9.72	294.60	0.000	0.000	72.01	0.00	0.0000	0.0000	0.0000	0.00

S T A T I C P I P E C O O R D I N A T E S, F O R C E S A N D S T R A I N S

NODE NO.	PIPE SECTION	X COORD (M)	Y COORD (M)	VERT ANGLE (DEG)	PIPE LENGTH (M)	SUPPORT REACTION (KN)	SEPARA -TION (M)	AXIAL TENSION (KN)	BENDING MOMENT (KN-M)	TENSILE STRAIN (PCT)	BENDING STRAIN (PCT)	TOTAL STRAIN (PCT)	PERCNT ALLOW (PCT)
61	SAGBEND	-201.55	-30.21	9.71	300.65	0.000	0.000	72.01	0.00	0.0000	0.0000	0.0000	0.00
62	SAGBEND	-207.51	-31.23	9.70	306.70	0.000	0.000	72.00	0.00	0.0000	0.0000	0.0000	0.00
63	SAGBEND	-210.87	-31.80	9.69	310.11	0.000	0.000	72.00	0.00	0.0000	0.0000	0.0000	0.00
64	SAGBEND	-215.16	-32.52	9.37	314.46	0.000	0.000	71.93	0.00	0.0000	0.0000	0.0000	0.00
65	SAGBEND	-219.45	-33.22	9.05	318.80	0.000	0.000	71.87	0.00	0.0000	0.0000	0.0000	0.00
66	SAGBEND	-225.43	-34.14	8.60	324.85	0.000	0.000	71.78	0.00	0.0000	0.0000	0.0000	0.00
67	SAGBEND	-231.41	-35.02	8.14	330.90	0.000	0.000	71.70	0.00	0.0000	0.0000	0.0000	0.00
68	SAGBEND	-237.40	-35.86	7.69	336.95	0.000	0.000	71.62	0.00	0.0000	0.0000	0.0000	0.00
69	SAGBEND	-243.40	-36.64	7.24	343.00	0.000	0.000	71.54	0.00	0.0000	0.0000	0.0000	0.00
70	SAGBEND	-249.41	-37.38	6.78	349.05	0.000	0.000	71.47	0.00	0.0000	0.0000	0.0000	0.00
71	SAGBEND	-255.42	-38.07	6.33	355.10	0.000	0.000	71.41	0.00	0.0000	0.0000	0.0000	0.00
72	SAGBEND	-261.43	-38.72	5.87	361.15	0.000	0.000	71.35	0.00	0.0000	0.0000	0.0000	0.00
73	SAGBEND	-267.46	-39.31	5.41	367.20	0.000	0.000	71.29	0.00	0.0000	0.0000	0.0000	0.00
74	SAGBEND	-273.48	-39.86	4.95	373.25	0.000	0.000	71.24	0.00	0.0000	0.0000	0.0000	0.00
75	SAGBEND	-279.51	-40.35	4.50	379.30	0.000	0.000	71.19	0.00	0.0000	0.0000	0.0000	0.00
76	SAGBEND	-285.54	-40.81	4.04	385.35	0.000	0.000	71.15	0.00	0.0000	0.0000	0.0000	0.00
77	SAGBEND	-291.58	-41.21	3.58	391.40	0.000	0.000	71.11	0.00	0.0000	0.0000	0.0000	0.00
78	SAGBEND	-297.62	-41.56	3.12	397.45	0.000	0.000	71.08	0.00	0.0000	0.0000	0.0000	0.00
79	SAGBEND	-303.66	-41.86	2.66	403.50	0.000	0.000	71.05	0.00	0.0000	0.0000	0.0000	0.00
80	SAGBEND	-309.71	-42.12	2.20	409.55	0.000	0.000	71.03	0.00	0.0000	0.0000	0.0000	0.00
81	SAGBEND	-315.75	-42.33	1.73	415.60	0.000	0.000	71.01	0.00	0.0000	0.0000	0.0000	0.00
82	SAGBEND	-321.80	-42.49	1.27	421.65	0.000	0.000	70.99	0.00	0.0000	0.0000	0.0000	0.00
83	SAGBEND	-327.85	-42.60	0.81	427.70	0.000	0.000	70.98	0.00	0.0000	0.0000	0.0000	0.00
84	SAGBEND	-333.90	-42.66	0.36	433.75	0.020	0.000	70.98	-0.01	0.0000	0.0000	0.0000	0.00
85	SEABED	-339.95	-42.67	0.01	439.80	0.411	0.000	70.97	0.00	0.0000	0.0000	0.0000	0.00
86	SEABED	-346.00	-42.67	0.00	445.85	0.567	0.000	70.97	0.00	0.0000	0.0000	0.0000	0.00
87	SEABED	-352.05	-42.67	0.00	451.90	0.572	0.000	70.97	0.00	0.0000	0.0000	0.0000	0.00
88	SEABED	-358.10	-42.67	0.00	457.95	0.572	0.000	70.97	0.00	0.0000	0.0000	0.0000	0.00
89	SEABED	-364.15	-42.67	0.00	464.00	0.572	0.000	70.97	0.00	0.0000	0.0000	0.0000	0.00
90	SEABED	-370.20	-42.67	0.00	470.05	0.572	0.000	70.97	0.00	0.0000	0.0000	0.0000	0.00
91	SEABED	-376.25	-42.67	0.00	476.10	0.572	0.000	70.97	0.00	0.0000	0.0000	0.0000	0.00
92	SEABED	-382.30	-42.67	0.00	482.15	0.572	0.000	70.97	0.00	0.0000	0.0000	0.0000	0.00
93	SEABED	-388.35	-42.67	0.00	488.20	0.572	0.000	70.97	0.00	0.0000	0.0000	0.0000	0.00
94	SEABED	-394.40	-42.67	0.00	494.25	0.572	0.000	70.97	0.00	0.0000	0.0000	0.0000	0.00
95	SEABED	-400.45	-42.67	0.00	500.30	0.572	0.000	70.97	0.00	0.0000	0.0000	0.0000	0.00
96	SEABED	-406.50	-42.67	0.00	506.35	0.572	0.000	70.97	0.00	0.0000	0.0000	0.0000	0.00
97	SEABED	-412.55	-42.67	0.00	512.40	0.572	0.000	70.97	0.00	0.0000	0.0000	0.0000	0.00
98	SEABED	-418.60	-42.67	0.00	518.45	0.572	0.000	70.97	0.00	0.0000	0.0000	0.0000	0.00
99	SEABED	-424.65	-42.67	0.00	524.50	0.572	0.000	70.97	0.00	0.0000	0.0000	0.0000	0.00
100	SEABED	-430.70	-42.67	0.00	530.55	0.572	0.000	70.97	0.00	0.0000	0.0000	0.0000	0.00
101	SEABED	-436.75	-42.67	0.00	536.60	0.572	0.000	70.97	0.00	0.0000	0.0000	0.0000	0.00
102	SEABED	-442.80	-42.67	0.00	542.65	0.572	0.000	70.97	0.00	0.0000	0.0000	0.0000	0.00
103	SEABED	-448.85	-42.67	0.00	548.70	0.572	0.000	70.97	0.00	0.0000	0.0000	0.0000	0.00
104	SEABED	-454.90	-42.67	0.00	554.75	0.572	0.000	70.97	0.00	0.0000	0.0000	0.0000	0.00

S T A T I C P I P E C O O R D I N A T E S, F O R C E S A N D S T R A I N S

NODE NO.	PIPE SECTION	X COORD (M)	Y COORD (M)	VERT ANGLE (DEG)	PIPE LENGTH (M)	SUPPORT REACTION (KN)	SEPARA -TION (M)	AXIAL TENSION (KN)	BENDING MOMENT (KN-M)	TENSILE STRAIN (PCT)	BENDING STRAIN (PCT)	TOTAL STRAIN (PCT)	PERCNT ALLOW (PCT)
105	SEABED	-460.95	-42.67	0.00	560.80	0.572	0.000	70.97	0.00	0.0000	0.0000	0.0000	0.00
106	SEABED	-467.00	-42.67	0.00	566.85	0.572	0.000	70.97	0.00	0.0000	0.0000	0.0000	0.00
107	SEABED	-473.05	-42.67	0.00	572.90	0.572	0.000	70.97	0.00	0.0000	0.0000	0.0000	0.00
108	SEABED	-479.10	-42.67	0.00	578.95	0.572	0.000	70.97	0.00	0.0000	0.0000	0.0000	0.00
109	SEABED	-485.15	-42.67	0.00	585.00	0.572	0.000	70.97	0.00	0.0000	0.0000	0.0000	0.00
110	SEABED	-491.20	-42.67	0.00	591.05	0.572	0.000	70.97	0.00	0.0000	0.0000	0.0000	0.00
111	SEABED	-497.25	-42.67	0.00	597.10	0.572	0.000	70.97	0.00	0.0000	0.0000	0.0000	0.00
112	SEABED	-503.30	-42.67	0.00	603.15	0.572	0.000	70.97	0.00	0.0000	0.0000	0.0000	0.00
113	SEABED	-509.35	-42.67	0.00	609.20	0.572	0.000	70.97	0.00	0.0000	0.0000	0.0000	0.00
114	SEABED	-515.40	-42.67	0.00	615.25	0.572	0.000	70.97	0.00	0.0000	0.0000	0.0000	0.00
115	SEABED	-521.45	-42.67	0.00	621.30	0.572	0.000	70.97	0.00	0.0000	0.0000	0.0000	0.00
116	SEABED	-527.50	-42.67	0.00	627.35	0.572	0.000	70.97	0.00	0.0000	0.0000	0.0000	0.00
117	SEABED	-533.55	-42.67	0.00	633.40	0.572	0.000	70.97	0.00	0.0000	0.0000	0.0000	0.00
118	SEABED	-539.60	-42.67	0.00	639.45	0.572	0.000	70.97	0.00	0.0000	0.0000	0.0000	0.00
119	SEABED	-545.65	-42.67	0.00	645.50	0.572	0.000	70.97	0.00	0.0000	0.0000	0.0000	0.00
120	SEABED	-551.70	-42.67	0.00	651.55	0.572	0.000	70.97	0.00	0.0000	0.0000	0.0000	0.00
121	SEABED	-557.75	-42.67	0.00	657.60	0.572	0.000	70.97	0.00	0.0000	0.0000	0.0000	0.00
122	SEABED	-563.80	-42.67	0.00	663.65	0.572	0.000	70.97	0.00	0.0000	0.0000	0.0000	0.00
123	SEABED	-569.85	-42.67	0.00	669.70	0.572	0.000	70.97	0.00	0.0000	0.0000	0.0000	0.00
124	SEABED	-575.90	-42.67	0.00	675.75	0.572	0.000	70.97	0.00	0.0000	0.0000	0.0000	0.00
125	SEABED	-581.95	-42.67	0.00	681.80	0.572	0.000	70.97	0.00	0.0000	0.0000	0.0000	0.00
126	SEABED	-588.00	-42.67	0.00	687.85	0.572	0.000	70.97	0.00	0.0000	0.0000	0.0000	0.00
127	SEABED	-594.05	-42.67	0.00	693.90	0.572	0.000	70.97	0.00	0.0000	0.0000	0.0000	0.00
128	SEABED	-600.10	-42.67	0.00	699.95	0.570	0.000	70.97	0.00	0.0000	0.0000	0.0000	0.00
129	SEABED	-606.15	-42.67	-0.01	706.00	0.433	0.000	70.97	0.00	0.0000	0.0000	0.0000	0.00
130	SEABED	-610.26	-42.67	-0.11	710.11	0.000	0.000	70.98	0.00	0.0000	0.0000	0.0000	0.00

S T A T I C P I P E C O O R D I N A T E S, F O R C E S A N D S T R A I N S

NODE NO.	PIPE SECTION	X COORD (M)	Y COORD (M)	VERT ANGLE (DEG)	PIPE LENGTH (M)	SUPPORT REACTION (KN)	SEPARA -TION (M)	AXIAL TENSION (KN)	BENDING MOMENT (KN-M)	TENSILE STRAIN (PCT)	BENDING STRAIN (PCT)	TOTAL STRAIN (PCT)	PERCNT ALLOW (PCT)
1	LAYBARGE	96.31	6.41	1.93	0.00	9.929	0.000	0.00	2.74	0.0000	0.0021	0.0021	0.00
3	LAYBARGE	84.28	6.05	1.58	12.04	24.164	0.000	-0.73	-19.23	0.0000	-0.0144	0.0144	0.00
5	LAYBARGE	73.45	5.73	1.90	22.87	24.336	0.000	-1.39	-29.33	-0.0001	-0.0219	0.0220	0.00
7	TENSIONR	60.10	5.24	2.31	36.23	32.090	0.000	98.22	-23.68	0.0046	-0.0177	0.0223	0.00
9	LAYBARGE	51.10	4.87	2.20	45.24	0.000	0.000	97.49	30.30	0.0045	0.0227	0.0272	0.00
10	LAYBARGE	46.45	4.70	1.92	49.89	10.266	0.000	97.17	12.42	0.0045	0.0093	0.0138	0.00
12	LAYBARGE	35.36	4.31	2.60	60.99	29.005	0.000	96.17	-78.91	0.0045	-0.0590	0.0635	0.00
14	LAYBARGE	25.34	3.64	5.32	71.03	44.827	0.000	94.53	-140.35	0.0044	-0.1050	0.1094	0.00
16	LAYBARGE	19.32	2.99	6.66	77.09	0.000	0.000	93.72	-33.22	0.0044	-0.0248	0.0292	0.00
17	LAYBARGE	8.88	1.76	6.74	87.60	29.700	0.000	91.26	-1.90	0.0042	-0.0014	0.0057	0.00
19	LAYBARGE	4.87	1.29	6.45	91.63	0.000	0.000	90.24	60.74	0.0042	0.0454	0.0496	0.00
20	LAYBARGE	3.05	1.09	6.11	93.46	0.000	0.471	89.77	83.20	0.0042	0.0622	0.0664	0.00
24	STINGER	-7.47	0.23	3.12	104.02	0.000	0.540	87.93	108.54	0.0041	0.0812	0.0853	0.00
26	STINGER	-16.58	-0.12	1.63	113.14	20.281	0.000	87.62	0.00	0.0041	0.0000	0.0041	0.00
29	STINGER	-26.47	-0.58	4.55	123.04	5.792	0.000	87.59	0.00	0.0000	0.0000	0.0000	0.00
31	STINGER	-37.33	-1.80	8.00	133.97	4.790	0.000	87.60	0.00	0.0000	0.0000	0.0000	0.00
33	STINGER	-40.32	-2.31	9.55	137.00	0.000	0.287	87.63	0.00	0.0000	0.0000	0.0000	0.00
35	SAGBEND	-46.58	-3.36	9.54	143.35	0.000	0.000	87.63	0.00	0.0000	0.0000	0.0000	0.00
36	SAGBEND	-52.54	-4.36	9.53	149.40	0.000	0.000	87.62	0.00	0.0000	0.0000	0.0000	0.00
37	SAGBEND	-58.51	-5.36	9.52	155.45	0.000	0.000	87.62	0.00	0.0000	0.0000	0.0000	0.00
38	SAGBEND	-64.48	-6.36	9.51	161.50	0.000	0.000	87.62	0.00	0.0000	0.0000	0.0000	0.00
39	SAGBEND	-70.44	-7.36	9.50	167.55	0.000	0.000	87.62	0.00	0.0000	0.0000	0.0000	0.00
40	SAGBEND	-76.41	-8.36	9.49	173.60	0.000	0.000	87.61	0.00	0.0000	0.0000	0.0000	0.00
41	SAGBEND	-82.38	-9.36	9.48	179.65	0.000	0.000	87.61	0.00	0.0000	0.0000	0.0000	0.00
42	SAGBEND	-88.35	-10.35	9.47	185.70	0.000	0.000	87.61	0.00	0.0000	0.0000	0.0000	0.00
43	SAGBEND	-94.31	-11.35	9.46	191.75	0.000	0.000	87.61	0.00	0.0000	0.0000	0.0000	0.00
44	SAGBEND	-100.28	-12.34	9.45	197.80	0.000	0.000	87.60	0.00	0.0000	0.0000	0.0000	0.00
45	SAGBEND	-106.25	-13.34	9.44	203.85	0.000	0.000	87.60	0.00	0.0000	0.0000	0.0000	0.00
46	SAGBEND	-112.22	-14.33	9.43	209.90	0.000	0.000	87.60	0.00	0.0000	0.0000	0.0000	0.00
47	SAGBEND	-118.19	-15.32	9.42	215.95	0.000	0.000	87.60	0.00	0.0000	0.0000	0.0000	0.00
48	SAGBEND	-124.16	-16.31	9.41	222.00	0.000	0.000	87.59	0.00	0.0000	0.0000	0.0000	0.00
49	SAGBEND	-130.12	-17.30	9.40	228.05	0.000	0.000	87.59	0.00	0.0000	0.0000	0.0000	0.00
50	SAGBEND	-136.09	-18.28	9.39	234.10	0.000	0.000	87.59	0.00	0.0000	0.0000	0.0000	0.00
51	SAGBEND	-142.06	-19.27	9.38	240.15	0.000	0.000	87.59	0.00	0.0000	0.0000	0.0000	0.00
52	SAGBEND	-148.03	-20.26	9.37	246.20	0.000	0.000	87.58	0.00	0.0000	0.0000	0.0000	0.00
53	SAGBEND	-154.00	-21.24	9.36	252.25	0.000	0.000	87.58	0.00	0.0000	0.0000	0.0000	0.00
54	SAGBEND	-159.97	-22.22	9.35	258.30	0.000	0.000	87.58	0.00	0.0000	0.0000	0.0000	0.00
55	SAGBEND	-165.94	-23.21	9.34	264.35	0.000	0.000	87.58	0.00	0.0000	0.0000	0.0000	0.00
56	SAGBEND	-171.91	-24.19	9.33	270.40	0.000	0.000	87.57	0.00	0.0000	0.0000	0.0000	0.00
57	SAGBEND	-177.88	-25.17	9.32	276.45	0.000	0.000	87.57	0.00	0.0000	0.0000	0.0000	0.00
58	SAGBEND	-183.85	-26.15	9.31	282.50	0.000	0.000	87.57	0.00	0.0000	0.0000	0.0000	0.00
59	SAGBEND	-189.82	-27.12	9.30	288.55	0.000	0.000	87.56	0.00	0.0000	0.0000	0.0000	0.00
60	SAGBEND	-195.79	-28.10	9.29	294.60	0.000	0.000	87.56	0.00	0.0000	0.0000	0.0000	0.00

S T A T I C P I P E C O O R D I N A T E S, F O R C E S A N D S T R A I N S

NODE NO.	PIPE SECTION	X COORD (M)	Y COORD (M)	VERT ANGLE (DEG)	PIPE LENGTH (M)	SUPPORT REACTION (KN)	SEPARA -TION (M)	AXIAL TENSION (KN)	BENDING MOMENT (KN-M)	TENSILE STRAIN (PCT)	BENDING STRAIN (PCT)	TOTAL STRAIN (PCT)	PERCNT ALLOW (PCT)
61	SAGBEND	-201.76	-29.08	9.28	300.65	0.000	0.000	87.56	0.00	0.0000	0.0000	0.0000	0.00
62	SAGBEND	-207.73	-30.05	9.27	306.70	0.000	0.000	87.56	0.00	0.0000	0.0000	0.0000	0.00
63	SAGBEND	-211.10	-30.60	9.26	310.11	0.000	0.000	87.56	0.00	0.0000	0.0000	0.0000	0.00
64	SAGBEND	-215.39	-31.29	9.00	314.45	0.000	0.000	87.49	0.00	0.0000	0.0000	0.0000	0.00
65	SAGBEND	-219.68	-31.96	8.73	318.80	0.000	0.000	87.43	0.00	0.0000	0.0000	0.0000	0.00
66	SAGBEND	-225.66	-32.86	8.36	324.85	0.000	0.000	87.34	0.00	0.0000	0.0000	0.0000	0.00

67	SAGBEND	-231.65	-33.72	7.99	330.90	0.000	0.000	87.26	0.00	0.0000	0.0000	0.0000	0.00
68	SAGBEND	-237.65	-34.54	7.61	336.95	0.000	0.000	87.18	0.00	0.0000	0.0000	0.0000	0.00
69	SAGBEND	-243.65	-35.32	7.24	343.00	0.000	0.000	87.11	0.00	0.0000	0.0000	0.0000	0.00
70	SAGBEND	-249.65	-36.06	6.87	349.05	0.000	0.000	87.04	0.00	0.0000	0.0000	0.0000	0.00
71	SAGBEND	-255.66	-36.77	6.49	355.10	0.000	0.000	86.97	0.00	0.0000	0.0000	0.0000	0.00
72	SAGBEND	-261.67	-37.43	6.12	361.15	0.000	0.000	86.91	0.00	0.0000	0.0000	0.0000	0.00
73	SAGBEND	-267.69	-38.06	5.74	367.20	0.000	0.000	86.85	0.00	0.0000	0.0000	0.0000	0.00
74	SAGBEND	-273.71	-38.64	5.37	373.25	0.000	0.000	86.80	0.00	0.0000	0.0000	0.0000	0.00
75	SAGBEND	-279.74	-39.19	4.99	379.30	0.000	0.000	86.74	0.00	0.0000	0.0000	0.0000	0.00
76	SAGBEND	-285.77	-39.70	4.62	385.35	0.000	0.000	86.70	0.00	0.0000	0.0000	0.0000	0.00
77	SAGBEND	-291.80	-40.16	4.24	391.40	0.000	0.000	86.65	0.00	0.0000	0.0000	0.0000	0.00
78	SAGBEND	-297.83	-40.59	3.86	397.45	0.000	0.000	86.61	0.00	0.0000	0.0000	0.0000	0.00
79	SAGBEND	-303.87	-40.98	3.48	403.50	0.000	0.000	86.57	0.00	0.0000	0.0000	0.0000	0.00
80	SAGBEND	-309.91	-41.33	3.11	409.55	0.000	0.000	86.54	0.00	0.0000	0.0000	0.0000	0.00
81	SAGBEND	-315.95	-41.63	2.73	415.60	0.000	0.000	86.51	0.00	0.0000	0.0000	0.0000	0.00
82	SAGBEND	-322.00	-41.90	2.35	421.65	0.000	0.000	86.49	0.00	0.0000	0.0000	0.0000	0.00
83	SAGBEND	-328.04	-42.13	1.97	427.70	0.000	0.000	86.47	0.00	0.0000	0.0000	0.0000	0.00
84	SAGBEND	-334.09	-42.32	1.59	433.75	0.000	0.000	86.45	0.00	0.0000	0.0000	0.0000	0.00
85	SAGBEND	-340.14	-42.47	1.21	439.80	0.000	0.000	86.43	0.00	0.0000	0.0000	0.0000	0.00
86	SAGBEND	-346.19	-42.57	0.83	445.85	0.000	0.000	86.42	0.00	0.0000	0.0000	0.0000	0.00
87	SAGBEND	-352.24	-42.64	0.45	451.90	0.000	0.000	86.42	0.00	0.0000	0.0000	0.0000	0.00
88	SEABED	-358.29	-42.67	0.07	457.95	0.201	0.000	86.41	0.00	0.0000	0.0000	0.0000	0.00
89	SEABED	-364.34	-42.67	0.01	464.00	0.544	0.000	86.41	0.00	0.0000	0.0000	0.0000	0.00
90	SEABED	-370.39	-42.67	0.00	470.05	0.571	0.000	86.41	0.00	0.0000	0.0000	0.0000	0.00
91	SEABED	-376.44	-42.67	0.00	476.10	0.572	0.000	86.41	0.00	0.0000	0.0000	0.0000	0.00
92	SEABED	-382.49	-42.67	0.00	482.15	0.572	0.000	86.41	0.00	0.0000	0.0000	0.0000	0.00
93	SEABED	-388.54	-42.67	0.00	488.20	0.572	0.000	86.41	0.00	0.0000	0.0000	0.0000	0.00
94	SEABED	-394.59	-42.67	0.00	494.25	0.572	0.000	86.41	0.00	0.0000	0.0000	0.0000	0.00
95	SEABED	-400.64	-42.67	0.00	500.30	0.572	0.000	86.41	0.00	0.0000	0.0000	0.0000	0.00
96	SEABED	-406.69	-42.67	0.00	506.35	0.572	0.000	86.41	0.00	0.0000	0.0000	0.0000	0.00
97	SEABED	-412.74	-42.67	0.00	512.40	0.572	0.000	86.41	0.00	0.0000	0.0000	0.0000	0.00
98	SEABED	-418.79	-42.67	0.00	518.45	0.572	0.000	86.41	0.00	0.0000	0.0000	0.0000	0.00
99	SEABED	-424.84	-42.67	0.00	524.50	0.572	0.000	86.41	0.00	0.0000	0.0000	0.0000	0.00
100	SEABED	-430.89	-42.67	0.00	530.55	0.572	0.000	86.41	0.00	0.0000	0.0000	0.0000	0.00
101	SEABED	-436.94	-42.67	0.00	536.60	0.572	0.000	86.41	0.00	0.0000	0.0000	0.0000	0.00
102	SEABED	-442.99	-42.67	0.00	542.65	0.572	0.000	86.41	0.00	0.0000	0.0000	0.0000	0.00
103	SEABED	-449.04	-42.67	0.00	548.70	0.572	0.000	86.41	0.00	0.0000	0.0000	0.0000	0.00
104	SEABED	-455.09	-42.67	0.00	554.75	0.572	0.000	86.41	0.00	0.0000	0.0000	0.0000	0.00

S T A T I C P I P E C O O R D I N A T E S, F O R C E S A N D S T R A I N S

NODE NO.	PIPE SECTION	X COORD (M)	Y COORD (M)	VERT ANGLE (DEG)	PIPE LENGTH (M)	SUPPORT REACTION (KN)	SEPARA -TION (M)	AXIAL TENSION (KN)	BENDING MOMENT (KN-M)	TENSILE STRAIN (PCT)	BENDING STRAIN (PCT)	TOTAL STRAIN (PCT)	PERCNT ALLOW (PCT)
105	SEABED	-461.14	-42.67	0.00	560.80	0.572	0.000	86.41	0.00	0.0000	0.0000	0.0000	0.00
106	SEABED	-467.19	-42.67	0.00	566.85	0.572	0.000	86.41	0.00	0.0000	0.0000	0.0000	0.00
107	SEABED	-473.24	-42.67	0.00	572.90	0.572	0.000	86.41	0.00	0.0000	0.0000	0.0000	0.00
108	SEABED	-479.29	-42.67	0.00	578.95	0.572	0.000	86.41	0.00	0.0000	0.0000	0.0000	0.00
109	SEABED	-485.34	-42.67	0.00	585.00	0.572	0.000	86.41	0.00	0.0000	0.0000	0.0000	0.00
110	SEABED	-491.39	-42.67	0.00	591.05	0.572	0.000	86.41	0.00	0.0000	0.0000	0.0000	0.00
111	SEABED	-497.44	-42.67	0.00	597.10	0.572	0.000	86.41	0.00	0.0000	0.0000	0.0000	0.00
112	SEABED	-503.49	-42.67	0.00	603.15	0.572	0.000	86.41	0.00	0.0000	0.0000	0.0000	0.00
113	SEABED	-509.54	-42.67	0.00	609.20	0.572	0.000	86.41	0.00	0.0000	0.0000	0.0000	0.00
114	SEABED	-515.59	-42.67	0.00	615.25	0.572	0.000	86.41	0.00	0.0000	0.0000	0.0000	0.00
115	SEABED	-521.64	-42.67	0.00	621.30	0.572	0.000	86.41	0.00	0.0000	0.0000	0.0000	0.00
116	SEABED	-527.69	-42.67	0.00	627.35	0.572	0.000	86.41	0.00	0.0000	0.0000	0.0000	0.00
117	SEABED	-533.74	-42.67	0.00	633.40	0.572	0.000	86.41	0.00	0.0000	0.0000	0.0000	0.00
118	SEABED	-539.79	-42.67	0.00	639.45	0.572	0.000	86.41	0.00	0.0000	0.0000	0.0000	0.00
119	SEABED	-545.84	-42.67	0.00	645.50	0.572	0.000	86.41	0.00	0.0000	0.0000	0.0000	0.00
120	SEABED	-551.89	-42.67	0.00	651.55	0.572	0.000	86.41	0.00	0.0000	0.0000	0.0000	0.00
121	SEABED	-557.94	-42.67	0.00	657.60	0.572	0.000	86.41	0.00	0.0000	0.0000	0.0000	0.00
122	SEABED	-563.99	-42.67	0.00	663.65	0.572	0.000	86.41	0.00	0.0000	0.0000	0.0000	0.00
123	SEABED	-570.04	-42.67	0.00	669.70	0.572	0.000	86.41	0.00	0.0000	0.0000	0.0000	0.00
124	SEABED	-576.09	-42.67	0.00	675.75	0.572	0.000	86.41	0.00	0.0000	0.0000	0.0000	0.00
125	SEABED	-582.14	-42.67	0.00	681.80	0.572	0.000	86.41	0.00	0.0000	0.0000	0.0000	0.00
126	SEABED	-588.19	-42.67	0.00	687.85	0.572	0.000	86.41	0.00	0.0000	0.0000	0.0000	0.00
127	SEABED	-594.24	-42.67	0.00	693.90	0.572	0.000	86.41	0.00	0.0000	0.0000	0.0000	0.00
128	SEABED	-600.29	-42.67	0.00	699.95	0.568	0.000	86.41	0.00	0.0000	0.0000	0.0000	0.00
129	SEABED	-606.34	-42.67	-0.01	706.00	0.424	0.000	86.41	0.00	0.0000	0.0000	0.0000	0.00
130	SEABED	-610.44	-42.67	-0.11	710.11	0.000	0.000	86.41	0.00	0.0000	0.0000	0.0000	0.00

S T A T I C P I P E C O O R D I N A T E S, F O R C E S A N D S T R A I N S

NODE NO.	PIPE SECTION	X COORD (M)	Y COORD (M)	VERT ANGLE (DEG)	PIPE LENGTH (M)	SUPPORT REACTION (KN)	SEPARA -TION (M)	AXIAL TENSION (KN)	BENDING MOMENT (KN-M)	TENSILE STRAIN (PCT)	BENDING STRAIN (PCT)	TOTAL STRAIN (PCT)	PERCNT ALLOW (PCT)
1	LAYBARGE	96.31	6.41	1.93	0.00	9.928	0.000	0.00	2.74	0.0000	0.0021	0.0021	0.00
3	LAYBARGE	84.28	6.05	1.58	12.04	24.172	0.000	-0.73	-19.24	0.0000	-0.0144	0.0144	0.00
5	LAYBARGE	73.45	5.73	1.90	22.87	24.309	0.000	-1.39	-29.27	-0.0001	-0.0219	0.0220	0.00
7	TENSIONR	60.10	5.24	2.31	36.23	32.181	0.000	98.21	-23.82	0.0046	-0.0178	0.0224	0.00
9	LAYBARGE	51.10	4.87	2.20	45.24	0.000	0.000	97.49	30.74	0.0045	0.0230	0.0275	0.00
10	LAYBARGE	46.45	4.70	1.91	49.89	9.808	0.000	97.17	13.10	0.0045	0.0098	0.0143	0.00
12	LAYBARGE	35.36	4.31	2.62	60.99	31.114	0.000	96.16	-80.78	0.0045	-0.0604	0.0649	0.00
14	LAYBARGE	25.34	3.64	5.22	71.03	39.497	0.000	94.62	-127.93	0.0044	-0.0957	0.1001	0.00
16	LAYBARGE	19.31	3.01	6.50	77.09	0.000	0.000	93.74	-39.61	0.0044	-0.0296	0.0340	0.00
17	LAYBARGE	8.88	1.76	7.26	87.60	35.795	0.000	91.20	-46.01	0.0042	-0.0344	0.0387	0.00
19	LAYBARGE	4.88	1.24	7.42	91.63	0.000	0.000	90.21	20.23	0.0042	0.0151	0.0193	0.00
20	LAYBARGE	3.05	1.00	7.26	93.48	0.000	0.385	89.70	44.37	0.0042	0.0332	0.0374	0.00
24	STINGER	-7.55	-0.17	5.20	104.15	0.000	0.440	87.44	76.45	0.0041	0.0572	0.0612	0.00
26	STINGER	-16.66	-0.90	4.21	113.28	17.894	0.000	86.84	-3.05	0.0040	-0.0023	0.0063	0.00
29	STINGER	-26.49	-1.61	4.06	123.13	8.062	0.000	86.13	0.00	0.0040	0.0000	0.0040	0.00
31	STINGER	-37.35	-2.83	7.80	134.07	4.075	0.000	86.18	0.00	0.0000	0.0000	0.0000	0.00
33	STINGER	-40.32	-3.31	9.14	137.08	0.000	0.310	86.20	0.00	0.0000	0.0000	0.0000	0.00
35	SAGBEND	-46.51	-4.31	9.13	143.35	0.000	0.000	86.20	0.00	0.0000	0.0000	0.0000	0.00
36	SAGBEND	-52.49	-5.27	9.12	149.40	0.000	0.000	86.20	0.00	0.0000	0.0000	0.0000	0.00
37	SAGBEND	-58.46	-6.23	9.11	155.45	0.000	0.000	86.19	0.00	0.0000	0.0000	0.0000	0.00
38	SAGBEND	-64.44	-7.18	9.10	161.50	0.000	0.000	86.19	0.00	0.0000	0.0000	0.0000	0.00
39	SAGBEND	-70.41	-8.14	9.09	167.55	0.000	0.000	86.19	0.00	0.0000	0.0000	0.0000	0.00
40	SAGBEND	-76.38	-9.09	9.08	173.60	0.000	0.000	86.19	0.00	0.0000	0.0000	0.0000	0.00
41	SAGBEND	-82.36	-10.05	9.07	179.65	0.000	0.000	86.18	0.00	0.0000	0.0000	0.0000	0.00
42	SAGBEND	-88.33	-11.00	9.06	185.70	0.000	0.000	86.18	0.00	0.0000	0.0000	0.0000	0.00
43	SAGBEND	-94.31	-11.95	9.04	191.75	0.000	0.000	86.18	0.00	0.0000	0.0000	0.0000	0.00
44	SAGBEND	-100.28	-12.90	9.03	197.80	0.000	0.000	86.18	0.00	0.0000	0.0000	0.0000	0.00
45	SAGBEND	-106.26	-13.85	9.02	203.85	0.000	0.000	86.17	0.00	0.0000	0.0000	0.0000	0.00
46	SAGBEND	-112.23	-14.80	9.01	209.90	0.000	0.000	86.17	0.00	0.0000	0.0000	0.0000	0.00
47	SAGBEND	-118.21	-15.75	9.00	215.95	0.000	0.000	86.17	0.00	0.0000	0.0000	0.0000	0.00
48	SAGBEND	-124.18	-16.69	8.99	222.00	0.000	0.000	86.17	0.00	0.0000	0.0000	0.0000	0.00
49	SAGBEND	-130.16	-17.64	8.98	228.05	0.000	0.000	86.16	0.00	0.0000	0.0000	0.0000	0.00
50	SAGBEND	-136.13	-18.58	8.97	234.10	0.000	0.000	86.16	0.00	0.0000	0.0000	0.0000	0.00
51	SAGBEND	-142.11	-19.53	8.96	240.15	0.000	0.000	86.16	0.00	0.0000	0.0000	0.0000	0.00
52	SAGBEND	-148.09	-20.47	8.95	246.20	0.000	0.000	86.16	0.00	0.0000	0.0000	0.0000	0.00
53	SAGBEND	-154.06	-21.41	8.94	252.25	0.000	0.000	86.15	0.00	0.0000	0.0000	0.0000	0.00
54	SAGBEND	-160.04	-22.35	8.93	258.30	0.000	0.000	86.15	0.00	0.0000	0.0000	0.0000	0.00
55	SAGBEND	-166.02	-23.29	8.92	264.35	0.000	0.000	86.15	0.00	0.0000	0.0000	0.0000	0.00
56	SAGBEND	-171.99	-24.23	8.91	270.40	0.000	0.000	86.15	0.00	0.0000	0.0000	0.0000	0.00
57	SAGBEND	-177.97	-25.16	8.90	276.45	0.000	0.000	86.15	0.00	0.0000	0.0000	0.0000	0.00
58	SAGBEND	-183.95	-26.10	8.89	282.50	0.000	0.000	86.14	0.00	0.0000	0.0000	0.0000	0.00
59	SAGBEND	-189.93	-27.03	8.88	288.55	0.000	0.000	86.14	0.00	0.0000	0.0000	0.0000	0.00
60	SAGBEND	-195.90	-27.96	8.87	294.60	0.000	0.000	86.14	0.00	0.0000	0.0000	0.0000	0.00

S T A T I C P I P E C O O R D I N A T E S, F O R C E S A N D S T R A I N S

NODE NO.	PIPE SECTION	X COORD (M)	Y COORD (M)	VERT ANGLE (DEG)	PIPE LENGTH (M)	SUPPORT REACTION (KN)	SEPARA -TION (M)	AXIAL TENSION (KN)	BENDING MOMENT (KN-M)	TENSILE STRAIN (PCT)	BENDING STRAIN (PCT)	TOTAL STRAIN (PCT)	PERCNT ALLOW (PCT)
61	SAGBEND	-201.88	-28.90	8.86	300.65	0.000	0.000	86.14	0.00	0.0000	0.0000	0.0000	0.00
62	SAGBEND	-207.86	-29.83	8.85	306.70	0.000	0.000	86.13	0.00	0.0000	0.0000	0.0000	0.00
63	SAGBEND	-213.84	-30.76	8.84	312.75	0.000	0.000	86.13	0.00	0.0000	0.0000	0.0000	0.00
64	SAGBEND	-217.47	-31.32	8.83	316.43	0.000	0.000	86.13	0.00	0.0000	0.0000	0.0000	0.00
65	SAGBEND	-221.11	-31.89	8.82	320.11	0.000	0.000	86.13	0.00	0.0000	0.0000	0.0000	0.00
66	SAGBEND	-225.80	-32.60	8.53	324.85	0.000	0.000	86.06	0.00	0.0000	0.0000	0.0000	0.00
67	SAGBEND	-231.78	-33.48	8.15	330.90	0.000	0.000	85.98	0.00	0.0000	0.0000	0.0000	0.00
68	SAGBEND	-237.77	-34.32	7.77	336.95	0.000	0.000	85.90	0.00	0.0000	0.0000	0.0000	0.00
69	SAGBEND	-243.77	-35.12	7.40	343.00	0.000	0.000	85.82	0.00	0.0000	0.0000	0.0000	0.00
70	SAGBEND	-249.77	-35.88	7.02	349.05	0.000	0.000	85.75	0.00	0.0000	0.0000	0.0000	0.00
71	SAGBEND	-255.78	-36.60	6.64	355.10	0.000	0.000	85.68	0.00	0.0000	0.0000	0.0000	0.00
72	SAGBEND	-261.79	-37.28	6.26	361.15	0.000	0.000	85.62	0.00	0.0000	0.0000	0.0000	0.00
73	SAGBEND	-267.81	-37.91	5.88	367.20	0.000	0.000	85.56	0.00	0.0000	0.0000	0.0000	0.00
74	SAGBEND	-273.83	-38.51	5.50	373.25	0.000	0.000	85.50	0.00	0.0000	0.0000	0.0000	0.00
75	SAGBEND	-279.85	-39.07	5.11	379.30	0.000	0.000	85.45	0.00	0.0000	0.0000	0.0000	0.00
76	SAGBEND	-285.88	-39.59	4.73	385.35	0.000	0.000	85.40	0.00	0.0000	0.0000	0.0000	0.00
77	SAGBEND	-291.91	-40.07	4.35	391.40	0.000	0.000	85.35	0.00	0.0000	0.0000	0.0000	0.00
78	SAGBEND	-297.94	-40.51	3.97	397.45	0.000	0.000	85.31	0.00	0.0000	0.0000	0.0000	0.00
79	SAGBEND	-303.98	-40.91	3.58	403.50	0.000	0.000	85.27	0.00	0.0000	0.0000	0.0000	0.00
80	SAGBEND	-310.02	-41.27	3.20	409.55	0.000	0.000	85.24	0.00	0.0000	0.0000	0.0000	0.00

81	SAGBEND	-316.06	-41.58	2.82	415.60	0.000	0.000	85.21	0.00	0.0000	0.0000	0.0000	0.00
82	SAGBEND	-322.11	-41.86	2.43	421.65	0.000	0.000	85.18	0.00	0.0000	0.0000	0.0000	0.00
83	SAGBEND	-328.15	-42.10	2.05	427.70	0.000	0.000	85.16	0.00	0.0000	0.0000	0.0000	0.00
84	SAGBEND	-334.20	-42.29	1.66	433.75	0.000	0.000	85.14	0.00	0.0000	0.0000	0.0000	0.00
85	SAGBEND	-340.25	-42.45	1.28	439.80	0.000	0.000	85.13	0.00	0.0000	0.0000	0.0000	0.00
86	SAGBEND	-346.29	-42.56	0.89	445.85	0.000	0.000	85.12	0.00	0.0000	0.0000	0.0000	0.00
87	SAGBEND	-352.34	-42.64	0.51	451.90	0.000	0.000	85.11	0.00	0.0000	0.0000	0.0000	0.00
88	SAGBEND	-358.39	-42.67	0.12	457.95	0.148	0.000	85.11	0.01	0.0000	0.0000	0.0000	0.00
89	SEABED	-364.44	-42.67	0.01	464.00	0.530	0.000	85.11	0.01	0.0000	0.0000	0.0000	0.00
90	SEABED	-370.49	-42.67	0.00	470.05	0.571	0.000	85.11	0.00	0.0000	0.0000	0.0000	0.00
91	SEABED	-376.54	-42.67	0.00	476.10	0.572	0.000	85.11	0.00	0.0000	0.0000	0.0000	0.00
92	SEABED	-382.59	-42.67	0.00	482.15	0.572	0.000	85.11	0.00	0.0000	0.0000	0.0000	0.00
93	SEABED	-388.64	-42.67	0.00	488.20	0.572	0.000	85.11	0.00	0.0000	0.0000	0.0000	0.00
94	SEABED	-394.69	-42.67	0.00	494.25	0.572	0.000	85.11	0.00	0.0000	0.0000	0.0000	0.00
95	SEABED	-400.74	-42.67	0.00	500.30	0.572	0.000	85.11	0.00	0.0000	0.0000	0.0000	0.00
96	SEABED	-406.79	-42.67	0.00	506.35	0.572	0.000	85.11	0.00	0.0000	0.0000	0.0000	0.00
97	SEABED	-412.84	-42.67	0.00	512.40	0.572	0.000	85.11	0.00	0.0000	0.0000	0.0000	0.00
98	SEABED	-418.89	-42.67	0.00	518.45	0.572	0.000	85.11	0.00	0.0000	0.0000	0.0000	0.00
99	SEABED	-424.94	-42.67	0.00	524.50	0.572	0.000	85.11	0.00	0.0000	0.0000	0.0000	0.00
100	SEABED	-430.99	-42.67	0.00	530.55	0.572	0.000	85.11	0.00	0.0000	0.0000	0.0000	0.00
101	SEABED	-437.04	-42.67	0.00	536.60	0.572	0.000	85.11	0.00	0.0000	0.0000	0.0000	0.00
102	SEABED	-443.09	-42.67	0.00	542.65	0.572	0.000	85.11	0.00	0.0000	0.0000	0.0000	0.00
103	SEABED	-449.14	-42.67	0.00	548.70	0.572	0.000	85.11	0.00	0.0000	0.0000	0.0000	0.00
104	SEABED	-455.19	-42.67	0.00	554.75	0.572	0.000	85.11	0.00	0.0000	0.0000	0.0000	0.00

S T A T I C P I P E C O O R D I N A T E S, F O R C E S A N D S T R A I N S

NODE NO.	PIPE SECTION	X COORD (M)	Y COORD (M)	VERT ANGLE (DEG)	PIPE LENGTH (M)	SUPPORT REACTION (KN)	SEPARA -TION (M)	AXIAL TENSION (KN)	BENDING MOMENT (KN-M)	TENSILE STRAIN (PCT)	BENDING STRAIN (PCT)	TOTAL STRAIN (PCT)	PERCNT ALLOW (PCT)
105	SEABED	-461.24	-42.67	0.00	560.80	0.572	0.000	85.11	0.00	0.0000	0.0000	0.0000	0.00
106	SEABED	-467.29	-42.67	0.00	566.85	0.572	0.000	85.11	0.00	0.0000	0.0000	0.0000	0.00
107	SEABED	-473.34	-42.67	0.00	572.90	0.572	0.000	85.11	0.00	0.0000	0.0000	0.0000	0.00
108	SEABED	-479.39	-42.67	0.00	578.95	0.572	0.000	85.11	0.00	0.0000	0.0000	0.0000	0.00
109	SEABED	-485.44	-42.67	0.00	585.00	0.572	0.000	85.11	0.00	0.0000	0.0000	0.0000	0.00
110	SEABED	-491.49	-42.67	0.00	591.05	0.572	0.000	85.11	0.00	0.0000	0.0000	0.0000	0.00
111	SEABED	-497.54	-42.67	0.00	597.10	0.572	0.000	85.11	0.00	0.0000	0.0000	0.0000	0.00
112	SEABED	-503.59	-42.67	0.00	603.15	0.572	0.000	85.11	0.00	0.0000	0.0000	0.0000	0.00
113	SEABED	-509.64	-42.67	0.00	609.20	0.572	0.000	85.11	0.00	0.0000	0.0000	0.0000	0.00
114	SEABED	-515.69	-42.67	0.00	615.25	0.572	0.000	85.11	0.00	0.0000	0.0000	0.0000	0.00
115	SEABED	-521.74	-42.67	0.00	621.30	0.572	0.000	85.11	0.00	0.0000	0.0000	0.0000	0.00
116	SEABED	-527.79	-42.67	0.00	627.35	0.572	0.000	85.11	0.00	0.0000	0.0000	0.0000	0.00
117	SEABED	-533.84	-42.67	0.00	633.40	0.572	0.000	85.11	0.00	0.0000	0.0000	0.0000	0.00
118	SEABED	-539.89	-42.67	0.00	639.45	0.572	0.000	85.11	0.00	0.0000	0.0000	0.0000	0.00
119	SEABED	-545.94	-42.67	0.00	645.50	0.572	0.000	85.11	0.00	0.0000	0.0000	0.0000	0.00
120	SEABED	-551.99	-42.67	0.00	651.55	0.572	0.000	85.11	0.00	0.0000	0.0000	0.0000	0.00
121	SEABED	-558.04	-42.67	0.00	657.60	0.572	0.000	85.11	0.00	0.0000	0.0000	0.0000	0.00
122	SEABED	-564.09	-42.67	0.00	663.65	0.572	0.000	85.11	0.00	0.0000	0.0000	0.0000	0.00
123	SEABED	-570.14	-42.67	0.00	669.70	0.572	0.000	85.11	0.00	0.0000	0.0000	0.0000	0.00
124	SEABED	-576.19	-42.67	0.00	675.75	0.572	0.000	85.11	0.00	0.0000	0.0000	0.0000	0.00
125	SEABED	-582.24	-42.67	0.00	681.80	0.572	0.000	85.11	0.00	0.0000	0.0000	0.0000	0.00
126	SEABED	-588.29	-42.67	0.00	687.85	0.572	0.000	85.11	0.00	0.0000	0.0000	0.0000	0.00
127	SEABED	-594.34	-42.67	0.00	693.90	0.572	0.000	85.11	0.00	0.0000	0.0000	0.0000	0.00
128	SEABED	-600.39	-42.67	0.00	699.95	0.572	0.000	85.11	0.00	0.0000	0.0000	0.0000	0.00
129	SEABED	-606.44	-42.67	0.00	706.00	0.572	0.000	85.11	0.00	0.0000	0.0000	0.0000	0.00
130	SEABED	-612.49	-42.67	0.00	712.05	0.471	0.000	85.11	0.00	0.0000	0.0000	0.0000	0.00
131	SEABED	-616.52	-42.67	-0.01	716.08	0.327	0.000	85.11	0.00	0.0000	0.0000	0.0000	0.00
132	SEABED	-620.55	-42.67	-0.11	720.11	0.000	0.000	85.11	0.00	0.0000	0.0000	0.0000	0.00

S T A T I C P I P E C O O R D I N A T E S, F O R C E S A N D S T R A I N S

NODE NO.	PIPE SECTION	X COORD (M)	Y COORD (M)	VERT ANGLE (DEG)	PIPE LENGTH (M)	SUPPORT REACTION (KN)	SEPARA -TION (M)	AXIAL TENSION (KN)	BENDING MOMENT (KN-M)	TENSILE STRAIN (PCT)	BENDING STRAIN (PCT)	TOTAL STRAIN (PCT)	PERCNT ALLOW (PCT)
1	LAYBARGE	96.31	6.41	1.93	0.00	9.930	0.000	0.00	2.74	0.0000	0.0021	0.0021	0.00
3	LAYBARGE	84.28	6.05	1.58	12.04	24.162	0.000	-0.73	-19.23	0.0000	-0.0144	0.0144	0.00
5	LAYBARGE	73.45	5.73	1.90	22.87	24.341	0.000	-1.39	-29.34	-0.0001	-0.0219	0.0220	0.00
7	TENSIONR	60.10	5.24	2.31	36.23	32.149	0.000	144.92	-23.60	0.0067	-0.0177	0.0244	0.00
9	LAYBARGE	51.10	4.87	2.20	45.24	0.000	0.000	144.19	30.22	0.0067	0.0226	0.0293	0.00
10	LAYBARGE	46.45	4.70	1.91	49.89	9.400	0.000	143.87	13.42	0.0067	0.0100	0.0167	0.00
12	LAYBARGE	35.36	4.31	2.63	60.99	32.755	0.000	142.85	-80.98	0.0066	-0.0606	0.0672	0.00
14	LAYBARGE	25.34	3.64	5.22	71.03	41.657	0.000	141.31	-129.08	0.0066	-0.0965	0.1031	0.00
16	LAYBARGE	19.31	3.01	6.50	77.09	0.000	0.000	140.44	-39.07	0.0065	-0.0292	0.0358	0.00
17	LAYBARGE	8.88	1.76	7.27	87.60	35.958	0.000	137.89	-48.68	0.0064	-0.0364	0.0428	0.00
19	LAYBARGE	4.88	1.24	7.47	91.63	0.000	0.000	136.91	14.77	0.0064	0.0110	0.0174	0.00
20	LAYBARGE	3.05	1.00	7.34	93.48	0.000	0.381	136.41	37.57	0.0063	0.0281	0.0344	0.00
24	STINGER	-7.55	-0.21	5.51	104.14	0.000	0.435	134.12	69.49	0.0062	0.0520	0.0582	0.00
26	STINGER	-16.64	-0.99	4.57	113.27	15.864	0.000	133.45	1.00	0.0062	0.0008	0.0070	0.00
29	STINGER	-26.48	-1.76	4.36	123.14	10.224	0.000	132.68	0.00	0.0061	0.0000	0.0062	0.00
31	STINGER	-37.33	-3.04	7.44	134.07	3.387	0.000	132.78	0.00	0.0000	0.0000	0.0000	0.00
33	STINGER	-40.31	-3.46	8.17	137.08	0.000	0.375	132.79	0.00	0.0000	0.0000	0.0000	0.00
35	SAGBEND	-46.52	-4.36	8.16	143.35	0.000	0.000	132.79	0.00	0.0000	0.0000	0.0000	0.00
36	SAGBEND	-52.51	-5.21	8.15	149.40	0.000	0.000	132.78	0.00	0.0000	0.0000	0.0000	0.00
37	SAGBEND	-58.50	-6.07	8.14	155.45	0.000	0.000	132.78	0.00	0.0000	0.0000	0.0000	0.00
38	SAGBEND	-64.49	-6.93	8.14	161.50	0.000	0.000	132.78	0.00	0.0000	0.0000	0.0000	0.00
39	SAGBEND	-70.48	-7.78	8.13	167.55	0.000	0.000	132.78	0.00	0.0000	0.0000	0.0000	0.00
40	SAGBEND	-76.46	-8.64	8.12	173.60	0.000	0.000	132.78	0.00	0.0000	0.0000	0.0000	0.00
41	SAGBEND	-82.45	-9.49	8.12	179.65	0.000	0.000	132.77	0.00	0.0000	0.0000	0.0000	0.00
42	SAGBEND	-88.44	-10.35	8.11	185.70	0.000	0.000	132.77	0.00	0.0000	0.0000	0.0000	0.00
43	SAGBEND	-94.43	-11.20	8.10	191.75	0.000	0.000	132.77	0.00	0.0000	0.0000	0.0000	0.00
44	SAGBEND	-100.42	-12.05	8.10	197.80	0.000	0.000	132.77	0.00	0.0000	0.0000	0.0000	0.00
45	SAGBEND	-106.41	-12.91	8.09	203.85	0.000	0.000	132.76	0.00	0.0000	0.0000	0.0000	0.00
46	SAGBEND	-112.40	-13.76	8.08	209.90	0.000	0.000	132.76	0.00	0.0000	0.0000	0.0000	0.00
47	SAGBEND	-118.39	-14.61	8.08	215.95	0.000	0.000	132.76	0.00	0.0000	0.0000	0.0000	0.00
48	SAGBEND	-124.38	-15.46	8.07	222.00	0.000	0.000	132.76	0.00	0.0000	0.0000	0.0000	0.00
49	SAGBEND	-130.37	-16.31	8.06	228.05	0.000	0.000	132.76	0.00	0.0000	0.0000	0.0000	0.00
50	SAGBEND	-136.36	-17.15	8.06	234.10	0.000	0.000	132.75	0.00	0.0000	0.0000	0.0000	0.00
51	SAGBEND	-142.35	-18.00	8.05	240.15	0.000	0.000	132.75	0.00	0.0000	0.0000	0.0000	0.00
52	SAGBEND	-148.34	-18.85	8.04	246.20	0.000	0.000	132.75	0.00	0.0000	0.0000	0.0000	0.00
53	SAGBEND	-154.33	-19.69	8.04	252.25	0.000	0.000	132.75	0.00	0.0000	0.0000	0.0000	0.00
54	SAGBEND	-160.32	-20.54	8.03	258.30	0.000	0.000	132.74	0.00	0.0000	0.0000	0.0000	0.00
55	SAGBEND	-166.31	-21.38	8.02	264.35	0.000	0.000	132.74	0.00	0.0000	0.0000	0.0000	0.00
56	SAGBEND	-172.31	-22.23	8.02	270.40	0.000	0.000	132.74	0.00	0.0000	0.0000	0.0000	0.00
57	SAGBEND	-178.30	-23.07	8.01	276.45	0.000	0.000	132.74	0.00	0.0000	0.0000	0.0000	0.00
58	SAGBEND	-184.29	-23.91	8.00	282.50	0.000	0.000	132.74	0.00	0.0000	0.0000	0.0000	0.00
59	SAGBEND	-190.28	-24.76	8.00	288.55	0.000	0.000	132.73	0.00	0.0000	0.0000	0.0000	0.00
60	SAGBEND	-196.27	-25.60	7.99	294.60	0.000	0.000	132.73	0.00	0.0000	0.0000	0.0000	0.00

S T A T I C P I P E C O O R D I N A T E S, F O R C E S A N D S T R A I N S

NODE NO.	PIPE SECTION	X COORD (M)	Y COORD (M)	VERT ANGLE (DEG)	PIPE LENGTH (M)	SUPPORT REACTION (KN)	SEPARA -TION (M)	AXIAL TENSION (KN)	BENDING MOMENT (KN-M)	TENSILE STRAIN (PCT)	BENDING STRAIN (PCT)	TOTAL STRAIN (PCT)	PERCNT ALLOW (PCT)
61	SAGBEND	-202.26	-26.44	7.98	300.65	0.000	0.000	132.73	0.00	0.0000	0.0000	0.0000	0.00
62	SAGBEND	-208.25	-27.28	7.98	306.70	0.000	0.000	132.73	0.00	0.0000	0.0000	0.0000	0.00
63	SAGBEND	-214.24	-28.12	7.97	312.75	0.000	0.000	132.72	0.00	0.0000	0.0000	0.0000	0.00
64	SAGBEND	-217.89	-28.63	7.96	316.43	0.000	0.000	132.72	0.00	0.0000	0.0000	0.0000	0.00
65	SAGBEND	-221.53	-29.14	7.96	320.11	0.000	0.000	132.72	0.00	0.0000	0.0000	0.0000	0.00
66	SAGBEND	-226.23	-29.79	7.77	324.85	0.000	0.000	132.66	0.00	0.0000	0.0000	0.0000	0.00
67	SAGBEND	-232.22	-30.59	7.52	330.90	0.000	0.000	132.58	0.00	0.0000	0.0000	0.0000	0.00
68	SAGBEND	-238.22	-31.37	7.28	336.95	0.000	0.000	132.51	0.00	0.0000	0.0000	0.0000	0.00
69	SAGBEND	-244.23	-32.12	7.03	343.00	0.000	0.000	132.44	0.00	0.0000	0.0000	0.0000	0.00
70	SAGBEND	-250.23	-32.85	6.79	349.05	0.000	0.000	132.37	0.00	0.0000	0.0000	0.0000	0.00
71	SAGBEND	-256.24	-33.55	6.54	355.10	0.000	0.000	132.30	0.00	0.0000	0.0000	0.0000	0.00
72	SAGBEND	-262.25	-34.23	6.30	361.15	0.000	0.000	132.24	0.00	0.0000	0.0000	0.0000	0.00
73	SAGBEND	-268.27	-34.88	6.05	367.20	0.000	0.000	132.18	0.00	0.0000	0.0000	0.0000	0.00
74	SAGBEND	-274.29	-35.51	5.80	373.25	0.000	0.000	132.12	0.00	0.0000	0.0000	0.0000	0.00
75	SAGBEND	-280.31	-36.10	5.56	379.30	0.000	0.000	132.06	0.00	0.0000	0.0000	0.0000	0.00
76	SAGBEND	-286.33	-36.68	5.31	385.35	0.000	0.000	132.01	0.00	0.0000	0.0000	0.0000	0.00
77	SAGBEND	-292.36	-37.22	5.06	391.40	0.000	0.000	131.96	0.00	0.0000	0.0000	0.0000	0.00
78	SAGBEND	-298.38	-37.75	4.82	397.45	0.000	0.000	131.91	0.00	0.0000	0.0000	0.0000	0.00
79	SAGBEND	-304.41	-38.24	4.57	403.50	0.000	0.000	131.86	0.00	0.0000	0.0000	0.0000	0.00
80	SAGBEND	-310.44	-38.71	4.32	409.55	0.000	0.000	131.82	0.00	0.0000	0.0000	0.0000	0.00
81	SAGBEND	-316.48	-39.15	4.07	415.60	0.000	0.000	131.78	0.00	0.0000	0.0000	0.0000	0.00
82	SAGBEND	-322.51	-39.57	3.82	421.65	0.000	0.000	131.74	0.00	0.0000	0.0000	0.0000	0.00
83	SAGBEND	-328.55	-39.96	3.58	427.70	0.000	0.000	131.70	0.00	0.0000	0.0000	0.0000	0.00
84	SAGBEND	-334.59	-40.32	3.33	433.75	0.000	0.000	131.66	0.00	0.0000	0.0000	0.0000	0.00
85	SAGBEND	-340.63	-40.66	3.08	439.80	0.000	0.000	131.63	0.00	0.0000	0.0000	0.0000	0.00
86	SAGBEND	-346.67	-40.97	2.83	445.85	0.000	0.000	131.60	0.00	0.0000	0.0000	0.0000	0.00
87	SAGBEND	-352.72	-41.26	2.58	451.90	0.000	0.000	131.58	0.00	0.0000	0.0000	0.0000	0.00
88	SAGBEND	-358.76	-41.52	2.33	457.95	0.000	0.000	131.55	0.00	0.0000	0.0000	0.0000	0.00
89	SAGBEND	-364.81	-41.75	2.08	464.00	0.000	0.000	131.53	0.00	0.0000	0.0000	0.0000	0.00
90	SAGBEND	-370.85	-41.96	1.84	470.05	0.000	0.000	131.51	0.00	0.0000	0.0000	0.0000	0.00
91	SAGBEND	-376.90	-42.14	1.59	476.10	0.000	0.000	131.49	0.00	0.0000	0.0000	0.0000	0.00
92	SAGBEND	-382.95	-42.29	1.34	482.15	0.000	0.000	131.48	0.00	0.0000	0.0000	0.0000	0.00

93	SAGBEND	-389.00	-42.42	1.09	488.20	0.000	0.000	131.47	0.00	0.0000	0.0000	0.0000	0.00
94	SAGBEND	-395.04	-42.52	0.84	494.25	0.000	0.000	131.46	0.00	0.0000	0.0000	0.0000	0.00
95	SAGBEND	-401.09	-42.60	0.59	500.30	0.000	0.000	131.45	0.00	0.0000	0.0000	0.0000	0.00
96	SAGBEND	-407.14	-42.65	0.34	506.35	0.000	0.000	131.44	0.00	0.0000	0.0000	0.0000	0.00
97	SAGBEND	-413.19	-42.67	0.09	512.40	0.139	0.000	131.44	0.01	0.0000	0.0000	0.0000	0.00
98	SEABED	-419.24	-42.67	0.01	518.45	0.512	0.000	131.44	0.00	0.0000	0.0000	0.0000	0.00
99	SEABED	-425.29	-42.67	0.00	524.50	0.568	0.000	131.44	0.00	0.0000	0.0000	0.0000	0.00
100	SEABED	-431.34	-42.67	0.00	530.55	0.571	0.000	131.44	0.00	0.0000	0.0000	0.0000	0.00
101	SEABED	-437.39	-42.67	0.00	536.60	0.572	0.000	131.44	0.00	0.0000	0.0000	0.0000	0.00
102	SEABED	-443.44	-42.67	0.00	542.65	0.572	0.000	131.44	0.00	0.0000	0.0000	0.0000	0.00
103	SEABED	-449.49	-42.67	0.00	548.70	0.572	0.000	131.44	0.00	0.0000	0.0000	0.0000	0.00
104	SEABED	-455.54	-42.67	0.00	554.75	0.572	0.000	131.44	0.00	0.0000	0.0000	0.0000	0.00

S T A T I C P I P E C O O R D I N A T E S, F O R C E S A N D S T R A I N S

NODE NO.	PIPE SECTION	X COORD (M)	Y COORD (M)	VERT ANGLE (DEG)	PIPE LENGTH (M)	SUPPORT REACTION (KN)	SEPARA -TION (M)	AXIAL TENSION (KN)	BENDING MOMENT (KN-M)	TENSILE STRAIN (PCT)	BENDING STRAIN (PCT)	TOTAL STRAIN (PCT)	PERCNT ALLOW (PCT)
105	SEABED	-461.59	-42.67	0.00	560.80	0.572	0.000	131.44	0.00	0.0000	0.0000	0.0000	0.00
106	SEABED	-467.64	-42.67	0.00	566.85	0.572	0.000	131.44	0.00	0.0000	0.0000	0.0000	0.00
107	SEABED	-473.69	-42.67	0.00	572.90	0.572	0.000	131.44	0.00	0.0000	0.0000	0.0000	0.00
108	SEABED	-479.74	-42.67	0.00	578.95	0.572	0.000	131.44	0.00	0.0000	0.0000	0.0000	0.00
109	SEABED	-485.79	-42.67	0.00	585.00	0.572	0.000	131.44	0.00	0.0000	0.0000	0.0000	0.00
110	SEABED	-491.84	-42.67	0.00	591.05	0.572	0.000	131.44	0.00	0.0000	0.0000	0.0000	0.00
111	SEABED	-497.89	-42.67	0.00	597.10	0.572	0.000	131.44	0.00	0.0000	0.0000	0.0000	0.00
112	SEABED	-503.94	-42.67	0.00	603.15	0.572	0.000	131.44	0.00	0.0000	0.0000	0.0000	0.00
113	SEABED	-509.99	-42.67	0.00	609.20	0.572	0.000	131.44	0.00	0.0000	0.0000	0.0000	0.00
114	SEABED	-516.04	-42.67	0.00	615.25	0.572	0.000	131.44	0.00	0.0000	0.0000	0.0000	0.00
115	SEABED	-522.09	-42.67	0.00	621.30	0.572	0.000	131.44	0.00	0.0000	0.0000	0.0000	0.00
116	SEABED	-528.14	-42.67	0.00	627.35	0.572	0.000	131.44	0.00	0.0000	0.0000	0.0000	0.00
117	SEABED	-534.19	-42.67	0.00	633.40	0.572	0.000	131.44	0.00	0.0000	0.0000	0.0000	0.00
118	SEABED	-540.24	-42.67	0.00	639.45	0.572	0.000	131.44	0.00	0.0000	0.0000	0.0000	0.00
119	SEABED	-546.29	-42.67	0.00	645.50	0.572	0.000	131.44	0.00	0.0000	0.0000	0.0000	0.00
120	SEABED	-552.34	-42.67	0.00	651.55	0.572	0.000	131.44	0.00	0.0000	0.0000	0.0000	0.00
121	SEABED	-558.39	-42.67	0.00	657.60	0.572	0.000	131.44	0.00	0.0000	0.0000	0.0000	0.00
122	SEABED	-564.44	-42.67	0.00	663.65	0.572	0.000	131.44	0.00	0.0000	0.0000	0.0000	0.00
123	SEABED	-570.49	-42.67	0.00	669.70	0.572	0.000	131.44	0.00	0.0000	0.0000	0.0000	0.00
124	SEABED	-576.54	-42.67	0.00	675.75	0.572	0.000	131.44	0.00	0.0000	0.0000	0.0000	0.00
125	SEABED	-582.59	-42.67	0.00	681.80	0.572	0.000	131.44	0.00	0.0000	0.0000	0.0000	0.00
126	SEABED	-588.64	-42.67	0.00	687.85	0.572	0.000	131.44	0.00	0.0000	0.0000	0.0000	0.00
127	SEABED	-594.69	-42.67	0.00	693.90	0.572	0.000	131.44	0.00	0.0000	0.0000	0.0000	0.00
128	SEABED	-600.74	-42.67	0.00	699.95	0.572	0.000	131.44	0.00	0.0000	0.0000	0.0000	0.00
129	SEABED	-606.79	-42.67	0.00	706.00	0.570	0.000	131.44	0.00	0.0000	0.0000	0.0000	0.00
130	SEABED	-612.84	-42.67	0.00	712.05	0.464	0.000	131.44	0.00	0.0000	0.0000	0.0000	0.00
131	SEABED	-616.87	-42.67	-0.01	716.08	0.305	0.000	131.44	0.00	0.0000	0.0000	0.0000	0.00
132	SEABED	-620.90	-42.67	-0.09	720.11	0.000	0.000	131.44	0.00	0.0000	0.0000	0.0000	0.00

S T A T I C P I P E C O O R D I N A T E S, F O R C E S A N D S T R A I N S

NODE NO.	PIPE SECTION	X COORD (M)	Y COORD (M)	VERT ANGLE (DEG)	PIPE LENGTH (M)	SUPPORT REACTION (KN)	SEPARA -TION (M)	AXIAL TENSION (KN)	BENDING MOMENT (KN-M)	TENSILE STRAIN (PCT)	BENDING STRAIN (PCT)	TOTAL STRAIN (PCT)	PERCNT ALLOW (PCT)
1	LAYBARGE	96.31	6.41	1.93	0.00	9.927	0.000	0.00	2.74	0.0000	0.0021	0.0021	0.00
3	LAYBARGE	84.28	6.05	1.58	12.04	24.178	0.000	-0.73	-19.25	0.0000	-0.0144	0.0144	0.00
5	LAYBARGE	73.45	5.73	1.90	22.87	24.289	0.000	-1.39	-29.23	-0.0001	-0.0219	0.0219	0.00
7	TENSIONR	60.10	5.24	2.31	36.23	32.326	0.000	144.92	-23.87	0.0067	-0.0179	0.0246	0.00
9	LAYBARGE	51.10	4.87	2.20	45.24	0.000	0.000	144.19	31.07	0.0067	0.0232	0.0299	0.00
10	LAYBARGE	46.45	4.70	1.90	49.89	8.478	0.000	143.87	14.78	0.0067	0.0111	0.0177	0.00
12	LAYBARGE	35.36	4.31	2.68	60.99	37.058	0.000	142.82	-84.75	0.0066	-0.0634	0.0700	0.00
14	LAYBARGE	25.34	3.64	5.01	71.03	30.550	0.000	141.47	-103.70	0.0066	-0.0776	0.0841	0.00
16	LAYBARGE	19.31	3.04	6.17	77.09	0.000	0.000	140.49	-51.80	0.0065	-0.0387	0.0453	0.00
17	LAYBARGE	8.88	1.76	8.34	87.60	52.814	0.000	137.43	-141.11	0.0064	-0.1056	0.1120	0.00
19	LAYBARGE	4.90	1.13	9.42	91.63	0.000	0.000	136.63	-59.67	0.0064	-0.0446	0.0510	0.00
20	LAYBARGE	3.08	0.82	9.63	93.48	0.000	0.204	136.07	-29.05	0.0063	-0.0217	0.0281	0.00
24	STINGER	-7.59	-0.96	9.03	104.29	0.000	0.191	133.43	47.10	0.0062	0.0352	0.0414	0.00
26	STINGER	-16.63	-2.32	8.12	113.43	4.988	0.000	132.12	19.84	0.0061	0.0148	0.0210	0.00
29	STINGER	-26.32	-3.68	8.18	123.22	21.103	0.000	130.72	-40.74	0.0060	-0.0305	0.0365	0.00
31	STINGER	-37.13	-5.28	8.47	134.15	0.000	0.069	129.16	0.00	0.0059	0.0000	0.0060	0.00
33	STINGER	-40.13	-5.69	7.68	137.18	0.000	0.578	129.17	0.00	0.0000	0.0000	0.0000	0.00
35	SAGBEND	-46.25	-6.51	7.68	143.35	0.000	0.000	129.17	0.00	0.0000	0.0000	0.0000	0.00
36	SAGBEND	-52.25	-7.32	7.67	149.40	0.000	0.000	129.17	0.00	0.0000	0.0000	0.0000	0.00
37	SAGBEND	-58.24	-8.13	7.66	155.45	0.000	0.000	129.17	0.00	0.0000	0.0000	0.0000	0.00
38	SAGBEND	-64.24	-8.93	7.65	161.50	0.000	0.000	129.17	0.00	0.0000	0.0000	0.0000	0.00
39	SAGBEND	-70.23	-9.74	7.65	167.55	0.000	0.000	129.16	0.00	0.0000	0.0000	0.0000	0.00
40	SAGBEND	-76.23	-10.54	7.64	173.60	0.000	0.000	129.16	0.00	0.0000	0.0000	0.0000	0.00
41	SAGBEND	-82.23	-11.35	7.63	179.65	0.000	0.000	129.16	0.00	0.0000	0.0000	0.0000	0.00
42	SAGBEND	-88.22	-12.15	7.63	185.70	0.000	0.000	129.16	0.00	0.0000	0.0000	0.0000	0.00
43	SAGBEND	-94.22	-12.95	7.62	191.75	0.000	0.000	129.15	0.00	0.0000	0.0000	0.0000	0.00
44	SAGBEND	-100.22	-13.75	7.61	197.80	0.000	0.000	129.15	0.00	0.0000	0.0000	0.0000	0.00
45	SAGBEND	-106.21	-14.56	7.61	203.85	0.000	0.000	129.15	0.00	0.0000	0.0000	0.0000	0.00
46	SAGBEND	-112.21	-15.36	7.60	209.90	0.000	0.000	129.15	0.00	0.0000	0.0000	0.0000	0.00
47	SAGBEND	-118.21	-16.16	7.59	215.95	0.000	0.000	129.15	0.00	0.0000	0.0000	0.0000	0.00
48	SAGBEND	-124.20	-16.95	7.58	222.00	0.000	0.000	129.14	0.00	0.0000	0.0000	0.0000	0.00
49	SAGBEND	-130.20	-17.75	7.58	228.05	0.000	0.000	129.14	0.00	0.0000	0.0000	0.0000	0.00
50	SAGBEND	-136.20	-18.55	7.57	234.10	0.000	0.000	129.14	0.00	0.0000	0.0000	0.0000	0.00
51	SAGBEND	-142.20	-19.35	7.56	240.15	0.000	0.000	129.14	0.00	0.0000	0.0000	0.0000	0.00
52	SAGBEND	-148.19	-20.14	7.56	246.20	0.000	0.000	129.14	0.00	0.0000	0.0000	0.0000	0.00
53	SAGBEND	-154.19	-20.94	7.55	252.25	0.000	0.000	129.13	0.00	0.0000	0.0000	0.0000	0.00
54	SAGBEND	-160.19	-21.73	7.54	258.30	0.000	0.000	129.13	0.00	0.0000	0.0000	0.0000	0.00
55	SAGBEND	-166.19	-22.53	7.54	264.35	0.000	0.000	129.13	0.00	0.0000	0.0000	0.0000	0.00
56	SAGBEND	-172.18	-23.32	7.53	270.40	0.000	0.000	129.13	0.00	0.0000	0.0000	0.0000	0.00
57	SAGBEND	-178.18	-24.11	7.52	276.45	0.000	0.000	129.13	0.00	0.0000	0.0000	0.0000	0.00
58	SAGBEND	-184.18	-24.90	7.51	282.50	0.000	0.000	129.12	0.00	0.0000	0.0000	0.0000	0.00
59	SAGBEND	-190.18	-25.69	7.51	288.55	0.000	0.000	129.12	0.00	0.0000	0.0000	0.0000	0.00
60	SAGBEND	-196.17	-26.48	7.50	294.60	0.000	0.000	129.12	0.00	0.0000	0.0000	0.0000	0.00

S T A T I C P I P E C O O R D I N A T E S, F O R C E S A N D S T R A I N S

NODE NO.	PIPE SECTION	X COORD (M)	Y COORD (M)	VERT ANGLE (DEG)	PIPE LENGTH (M)	SUPPORT REACTION (KN)	SEPARA -TION (M)	AXIAL TENSION (KN)	BENDING MOMENT (KN-M)	TENSILE STRAIN (PCT)	BENDING STRAIN (PCT)	TOTAL STRAIN (PCT)	PERCNT ALLOW (PCT)
61	SAGBEND	-202.17	-27.27	7.49	300.65	0.000	0.000	129.12	0.00	0.0000	0.0000	0.0000	0.00
62	SAGBEND	-208.17	-28.06	7.49	306.70	0.000	0.000	129.12	0.00	0.0000	0.0000	0.0000	0.00
63	SAGBEND	-214.17	-28.85	7.48	312.75	0.000	0.000	129.11	0.00	0.0000	0.0000	0.0000	0.00
64	SAGBEND	-220.17	-29.64	7.47	318.80	0.000	0.000	129.11	0.00	0.0000	0.0000	0.0000	0.00
65	SAGBEND	-226.17	-30.42	7.47	324.85	0.000	0.000	129.11	0.00	0.0000	0.0000	0.0000	0.00
66	SAGBEND	-231.38	-31.11	7.46	330.11	0.000	0.000	129.11	0.00	0.0000	0.0000	0.0000	0.00
67	SAGBEND	-238.17	-31.98	7.18	336.95	0.000	0.000	129.02	0.00	0.0000	0.0000	0.0000	0.00
68	SAGBEND	-244.17	-32.72	6.92	343.00	0.000	0.000	128.95	0.00	0.0000	0.0000	0.0000	0.00
69	SAGBEND	-250.18	-33.44	6.67	349.05	0.000	0.000	128.89	0.00	0.0000	0.0000	0.0000	0.00
70	SAGBEND	-256.19	-34.13	6.42	355.10	0.000	0.000	128.82	0.00	0.0000	0.0000	0.0000	0.00
71	SAGBEND	-262.20	-34.79	6.17	361.15	0.000	0.000	128.76	0.00	0.0000	0.0000	0.0000	0.00
72	SAGBEND	-268.22	-35.43	5.91	367.20	0.000	0.000	128.70	0.00	0.0000	0.0000	0.0000	0.00
73	SAGBEND	-274.24	-36.04	5.66	373.25	0.000	0.000	128.64	0.00	0.0000	0.0000	0.0000	0.00
74	SAGBEND	-280.26	-36.62	5.41	379.30	0.000	0.000	128.59	0.00	0.0000	0.0000	0.0000	0.00
75	SAGBEND	-286.28	-37.18	5.15	385.35	0.000	0.000	128.53	0.00	0.0000	0.0000	0.0000	0.00
76	SAGBEND	-292.31	-37.71	4.90	391.40	0.000	0.000	128.48	0.00	0.0000	0.0000	0.0000	0.00
77	SAGBEND	-298.34	-38.21	4.64	397.45	0.000	0.000	128.44	0.00	0.0000	0.0000	0.0000	0.00
78	SAGBEND	-304.37	-38.69	4.39	403.50	0.000	0.000	128.39	0.00	0.0000	0.0000	0.0000	0.00
79	SAGBEND	-310.40	-39.14	4.14	409.55	0.000	0.000	128.35	0.00	0.0000	0.0000	0.0000	0.00
80	SAGBEND	-316.44	-39.56	3.88	415.60	0.000	0.000	128.31	0.00	0.0000	0.0000	0.0000	0.00
81	SAGBEND	-322.48	-39.95	3.63	421.65	0.000	0.000	128.27	0.00	0.0000	0.0000	0.0000	0.00
82	SAGBEND	-328.51	-40.32	3.37	427.70	0.000	0.000	128.24	0.00	0.0000	0.0000	0.0000	0.00
83	SAGBEND	-334.55	-40.67	3.12	433.75	0.000	0.000	128.20	0.00	0.0000	0.0000	0.0000	0.00
84	SAGBEND	-340.60	-40.98	2.86	439.80	0.000	0.000	128.17	0.00	0.0000	0.0000	0.0000	0.00
85	SAGBEND	-346.64	-41.27	2.61	445.85	0.000	0.000	128.15	0.00	0.0000	0.0000	0.0000	0.00
86	SAGBEND	-352.68	-41.53	2.35	451.90	0.000	0.000	128.12	0.00	0.0000	0.0000	0.0000	0.00
87	SAGBEND	-358.73	-41.77	2.09	457.95	0.000	0.000	128.10	0.00	0.0000	0.0000	0.0000	0.00
88	SAGBEND	-364.77	-41.97	1.84	464.00	0.000	0.000	128.08	0.00	0.0000	0.0000	0.0000	0.00
89	SAGBEND	-370.82	-42.15	1.58	470.05	0.000	0.000	128.06	0.00	0.0000	0.0000	0.0000	0.00
90	SAGBEND	-376.87	-42.31	1.33	476.10	0.000	0.000	128.05	0.00	0.0000	0.0000	0.0000	0.00
91	SAGBEND	-382.92	-42.43	1.07	482.15	0.000	0.000	128.04	0.00	0.0000	0.0000	0.0000	0.00
92	SAGBEND	-388.97	-42.53	0.82	488.20	0.000	0.000	128.03	0.00	0.0000	0.0000	0.0000	0.00
93	SAGBEND	-395.02	-42.61	0.56	494.25	0.000	0.000	128.02	0.00	0.0000	0.0000	0.0000	0.00
94	SAGBEND	-401.07	-42.65	0.30	500.30	0.000	0.000	128.02	0.00	0.0000	0.0000	0.0000	0.00
95	SEABED	-407.12	-42.67	0.05	506.35	0.215	0.000	128.01	0.00	0.0000	0.0000	0.0000	0.00
96	SEABED	-413.17	-42.67	0.00	512.40	0.536	0.000	128.01	0.00	0.0000	0.0000	0.0000	0.00
97	SEABED	-419.22	-42.67	0.00	518.45	0.570	0.000	128.01	0.00	0.0000	0.0000	0.0000	0.00
98	SEABED	-425.27	-42.67	0.00	524.50	0.572	0.000	128.01	0.00	0.0000	0.0000	0.0000	0.00
99	SEABED	-431.32	-42.67	0.00	530.55	0.572	0.000	128.01	0.00	0.0000	0.0000	0.0000	0.00
100	SEABED	-437.37	-42.67	0.00	536.60	0.572	0.000	128.01	0.00	0.0000	0.0000	0.0000	0.00
101	SEABED	-443.42	-42.67	0.00	542.65	0.572	0.000	128.01	0.00	0.0000	0.0000	0.0000	0.00
102	SEABED	-449.47	-42.67	0.00	548.70	0.572	0.000	128.01	0.00	0.0000	0.0000	0.0000	0.00
103	SEABED	-455.52	-42.67	0.00	554.75	0.572	0.000	128.01	0.00	0.0000	0.0000	0.0000	0.00

104	SEABED	-461.57	-42.67	0.00	560.80	0.572	0.000	128.01	0.00	0.0000	0.0000	0.0000	0.00

S T A T I C P I P E C O O R D I N A T E S, F O R C E S A N D S T R A I N S

NODE NO.	PIPE SECTION	X COORD (M)	Y COORD (M)	VERT ANGLE (DEG)	PIPE LENGTH (M)	SUPPORT REACTION (KN)	SEPARA -TION (M)	AXIAL TENSION (KN)	BENDING MOMENT (KN-M)	TENSILE STRAIN (PCT)	BENDING STRAIN (PCT)	TOTAL STRAIN (PCT)	PERCNT ALLOW (PCT)
105	SEABED	-467.62	-42.67	0.00	566.85	0.572	0.000	128.01	0.00	0.0000	0.0000	0.0000	0.00
106	SEABED	-473.67	-42.67	0.00	572.90	0.572	0.000	128.01	0.00	0.0000	0.0000	0.0000	0.00
107	SEABED	-479.71	-42.67	0.00	578.94	0.572	0.000	128.01	0.00	0.0000	0.0000	0.0000	0.00
108	SEABED	-485.76	-42.67	0.00	584.99	0.572	0.000	128.01	0.00	0.0000	0.0000	0.0000	0.00
109	SEABED	-491.81	-42.67	0.00	591.04	0.572	0.000	128.01	0.00	0.0000	0.0000	0.0000	0.00
110	SEABED	-497.86	-42.67	0.00	597.09	0.572	0.000	128.01	0.00	0.0000	0.0000	0.0000	0.00
111	SEABED	-503.91	-42.67	0.00	603.14	0.572	0.000	128.01	0.00	0.0000	0.0000	0.0000	0.00
112	SEABED	-509.96	-42.67	0.00	609.19	0.572	0.000	128.01	0.00	0.0000	0.0000	0.0000	0.00
113	SEABED	-516.01	-42.67	0.00	615.24	0.572	0.000	128.01	0.00	0.0000	0.0000	0.0000	0.00
114	SEABED	-522.06	-42.67	0.00	621.29	0.572	0.000	128.01	0.00	0.0000	0.0000	0.0000	0.00
115	SEABED	-528.11	-42.67	0.00	627.34	0.572	0.000	128.01	0.00	0.0000	0.0000	0.0000	0.00
116	SEABED	-534.16	-42.67	0.00	633.39	0.572	0.000	128.01	0.00	0.0000	0.0000	0.0000	0.00
117	SEABED	-540.21	-42.67	0.00	639.44	0.572	0.000	128.01	0.00	0.0000	0.0000	0.0000	0.00
118	SEABED	-546.26	-42.67	0.00	645.49	0.572	0.000	128.01	0.00	0.0000	0.0000	0.0000	0.00
119	SEABED	-552.31	-42.67	0.00	651.54	0.572	0.000	128.01	0.00	0.0000	0.0000	0.0000	0.00
120	SEABED	-558.36	-42.67	0.00	657.59	0.572	0.000	128.01	0.00	0.0000	0.0000	0.0000	0.00
121	SEABED	-564.41	-42.67	0.00	663.64	0.572	0.000	128.01	0.00	0.0000	0.0000	0.0000	0.00
122	SEABED	-570.46	-42.67	0.00	669.69	0.572	0.000	128.01	0.00	0.0000	0.0000	0.0000	0.00
123	SEABED	-576.51	-42.67	0.00	675.74	0.572	0.000	128.01	0.00	0.0000	0.0000	0.0000	0.00
124	SEABED	-582.56	-42.67	0.00	681.79	0.572	0.000	128.01	0.00	0.0000	0.0000	0.0000	0.00
125	SEABED	-588.61	-42.67	0.00	687.84	0.572	0.000	128.01	0.00	0.0000	0.0000	0.0000	0.00
126	SEABED	-594.66	-42.67	0.00	693.89	0.572	0.000	128.01	0.00	0.0000	0.0000	0.0000	0.00
127	SEABED	-600.71	-42.67	0.00	699.94	0.572	0.000	128.01	0.00	0.0000	0.0000	0.0000	0.00
128	SEABED	-606.76	-42.67	0.00	705.99	0.572	0.000	128.01	0.00	0.0000	0.0000	0.0000	0.00
129	SEABED	-612.81	-42.67	0.00	712.04	0.572	0.000	128.01	0.00	0.0000	0.0000	0.0000	0.00
130	SEABED	-618.86	-42.67	0.00	718.09	0.568	0.000	128.01	0.00	0.0000	0.0000	0.0000	0.00
131	SEABED	-624.91	-42.67	-0.01	724.14	0.509	0.000	128.01	0.00	0.0000	0.0000	0.0000	0.00
132	SEABED	-630.87	-42.67	-0.08	730.10	0.000	0.000	128.01	0.00	0.0000	0.0000	0.0000	0.00

S T A T I C P I P E C O O R D I N A T E S, F O R C E S A N D S T R A I N S

NODE NO.	PIPE SECTION	X COORD (M)	Y COORD (M)	VERT ANGLE (DEG)	PIPE LENGTH (M)	SUPPORT REACTION (KN)	SEPARA -TION (M)	AXIAL TENSION (KN)	BENDING MOMENT (KN-M)	TENSILE STRAIN (PCT)	BENDING STRAIN (PCT)	TOTAL STRAIN (PCT)	PERCNT ALLOW (PCT)
1	LAYBARGE	96.31	6.41	1.93	0.00	9.928	0.000	0.00	2.74	0.0000	0.0021	0.0021	0.00
3	LAYBARGE	84.28	6.05	1.58	12.04	24.175	0.000	-0.73	-19.25	0.0000	-0.0144	0.0144	0.00
5	LAYBARGE	73.45	5.73	1.90	22.87	24.297	0.000	-1.39	-29.25	-0.0001	-0.0219	0.0219	0.00
7	TENSIONR	60.10	5.24	2.31	36.23	32.310	0.000	153.42	-23.81	0.0071	-0.0178	0.0249	0.00
9	LAYBARGE	51.10	4.87	2.20	45.24	0.000	0.000	152.69	30.92	0.0071	0.0231	0.0302	0.00
10	LAYBARGE	46.45	4.70	1.90	49.89	8.455	0.000	152.37	14.76	0.0071	0.0110	0.0181	0.00
12	LAYBARGE	35.36	4.31	2.68	60.99	37.129	0.000	151.32	-84.58	0.0070	-0.0633	0.0703	0.00
14	LAYBARGE	25.34	3.64	5.02	71.03	31.490	0.000	149.96	-105.24	0.0070	-0.0787	0.0857	0.00
16	LAYBARGE	19.31	3.04	6.19	77.09	0.000	0.000	148.99	-50.97	0.0069	-0.0381	0.0451	0.00
17	LAYBARGE	8.88	1.76	8.29	87.60	52.435	0.000	145.95	-137.22	0.0068	-0.1026	0.1094	0.00
19	LAYBARGE	4.89	1.13	9.33	91.63	0.000	0.000	145.14	-56.53	0.0068	-0.0423	0.0490	0.00
20	LAYBARGE	3.07	0.83	9.53	93.48	0.000	0.212	144.59	-26.34	0.0067	-0.0197	0.0264	0.00
24	STINGER	-7.58	-0.93	8.88	104.28	0.000	0.202	141.96	47.55	0.0066	0.0356	0.0422	0.00
26	STINGER	-16.63	-2.26	7.97	113.42	5.045	0.000	140.67	19.63	0.0065	0.0147	0.0212	0.00
29	STINGER	-26.33	-3.60	8.04	123.21	21.093	0.000	139.30	-40.53	0.0064	-0.0303	0.0368	0.00
31	STINGER	-37.14	-5.18	8.32	134.15	0.000	0.083	137.77	0.00	0.0063	0.0000	0.0064	0.00
33	STINGER	-40.15	-5.57	7.57	137.17	0.000	0.594	137.78	0.00	0.0000	0.0000	0.0000	0.00
35	SAGBEND	-46.27	-6.39	7.57	143.35	0.000	0.000	137.78	0.00	0.0000	0.0000	0.0000	0.00
36	SAGBEND	-52.27	-7.18	7.56	149.40	0.000	0.000	137.78	0.00	0.0000	0.0000	0.0000	0.00
37	SAGBEND	-58.26	-7.98	7.55	155.45	0.000	0.000	137.77	0.00	0.0000	0.0000	0.0000	0.00
38	SAGBEND	-64.26	-8.77	7.55	161.50	0.000	0.000	137.77	0.00	0.0000	0.0000	0.0000	0.00
39	SAGBEND	-70.26	-9.57	7.54	167.55	0.000	0.000	137.77	0.00	0.0000	0.0000	0.0000	0.00
40	SAGBEND	-76.26	-10.36	7.53	173.60	0.000	0.000	137.77	0.00	0.0000	0.0000	0.0000	0.00
41	SAGBEND	-82.25	-11.15	7.53	179.65	0.000	0.000	137.77	0.00	0.0000	0.0000	0.0000	0.00
42	SAGBEND	-88.25	-11.95	7.52	185.70	0.000	0.000	137.76	0.00	0.0000	0.0000	0.0000	0.00
43	SAGBEND	-94.25	-12.74	7.51	191.75	0.000	0.000	137.76	0.00	0.0000	0.0000	0.0000	0.00
44	SAGBEND	-100.25	-13.53	7.51	197.80	0.000	0.000	137.76	0.00	0.0000	0.0000	0.0000	0.00
45	SAGBEND	-106.25	-14.32	7.50	203.85	0.000	0.000	137.76	0.00	0.0000	0.0000	0.0000	0.00
46	SAGBEND	-112.24	-15.11	7.49	209.90	0.000	0.000	137.76	0.00	0.0000	0.0000	0.0000	0.00
47	SAGBEND	-118.24	-15.90	7.49	215.95	0.000	0.000	137.75	0.00	0.0000	0.0000	0.0000	0.00
48	SAGBEND	-124.24	-16.69	7.48	222.00	0.000	0.000	137.75	0.00	0.0000	0.0000	0.0000	0.00
49	SAGBEND	-130.24	-17.47	7.47	228.05	0.000	0.000	137.75	0.00	0.0000	0.0000	0.0000	0.00
50	SAGBEND	-136.24	-18.26	7.47	234.10	0.000	0.000	137.75	0.00	0.0000	0.0000	0.0000	0.00
51	SAGBEND	-142.24	-19.05	7.46	240.15	0.000	0.000	137.75	0.00	0.0000	0.0000	0.0000	0.00
52	SAGBEND	-148.24	-19.83	7.45	246.20	0.000	0.000	137.74	0.00	0.0000	0.0000	0.0000	0.00
53	SAGBEND	-154.24	-20.61	7.45	252.25	0.000	0.000	137.74	0.00	0.0000	0.0000	0.0000	0.00
54	SAGBEND	-160.23	-21.40	7.44	258.30	0.000	0.000	137.74	0.00	0.0000	0.0000	0.0000	0.00
55	SAGBEND	-166.23	-22.18	7.43	264.35	0.000	0.000	137.74	0.00	0.0000	0.0000	0.0000	0.00
56	SAGBEND	-172.23	-22.96	7.43	270.40	0.000	0.000	137.74	0.00	0.0000	0.0000	0.0000	0.00
57	SAGBEND	-178.23	-23.75	7.42	276.45	0.000	0.000	137.73	0.00	0.0000	0.0000	0.0000	0.00
58	SAGBEND	-184.23	-24.53	7.42	282.50	0.000	0.000	137.73	0.00	0.0000	0.0000	0.0000	0.00
59	SAGBEND	-190.23	-25.31	7.41	288.55	0.000	0.000	137.73	0.00	0.0000	0.0000	0.0000	0.00
60	SAGBEND	-196.23	-26.09	7.40	294.60	0.000	0.000	137.73	0.00	0.0000	0.0000	0.0000	0.00

S T A T I C P I P E C O O R D I N A T E S, F O R C E S A N D S T R A I N S

NODE NO.	PIPE SECTION	X COORD (M)	Y COORD (M)	VERT ANGLE (DEG)	PIPE LENGTH (M)	SUPPORT REACTION (KN)	SEPARA -TION (M)	AXIAL TENSION (KN)	BENDING MOMENT (KN-M)	TENSILE STRAIN (PCT)	BENDING STRAIN (PCT)	TOTAL STRAIN (PCT)	PERCNT ALLOW (PCT)
61	SAGBEND	-202.23	-26.87	7.40	300.65	0.000	0.000	137.73	0.00	0.0000	0.0000	0.0000	0.00
62	SAGBEND	-208.23	-27.65	7.39	306.70	0.000	0.000	137.72	0.00	0.0000	0.0000	0.0000	0.00
63	SAGBEND	-214.23	-28.42	7.38	312.75	0.000	0.000	137.72	0.00	0.0000	0.0000	0.0000	0.00
64	SAGBEND	-220.23	-29.20	7.38	318.80	0.000	0.000	137.72	0.00	0.0000	0.0000	0.0000	0.00
65	SAGBEND	-226.23	-29.98	7.37	324.85	0.000	0.000	137.72	0.00	0.0000	0.0000	0.0000	0.00
66	SAGBEND	-231.44	-30.65	7.36	330.11	0.000	0.000	137.72	0.00	0.0000	0.0000	0.0000	0.00
67	SAGBEND	-238.23	-31.51	7.10	336.95	0.000	0.000	137.63	0.00	0.0000	0.0000	0.0000	0.00
68	SAGBEND	-244.24	-32.25	6.86	343.00	0.000	0.000	137.56	0.00	0.0000	0.0000	0.0000	0.00
69	SAGBEND	-250.24	-32.96	6.62	349.05	0.000	0.000	137.50	0.00	0.0000	0.0000	0.0000	0.00
70	SAGBEND	-256.25	-33.64	6.39	355.10	0.000	0.000	137.43	0.00	0.0000	0.0000	0.0000	0.00
71	SAGBEND	-262.27	-34.30	6.15	361.15	0.000	0.000	137.37	0.00	0.0000	0.0000	0.0000	0.00
72	SAGBEND	-268.28	-34.94	5.91	367.20	0.000	0.000	137.31	0.00	0.0000	0.0000	0.0000	0.00
73	SAGBEND	-274.30	-35.55	5.68	373.25	0.000	0.000	137.25	0.00	0.0000	0.0000	0.0000	0.00
74	SAGBEND	-280.32	-36.14	5.44	379.30	0.000	0.000	137.20	0.00	0.0000	0.0000	0.0000	0.00
75	SAGBEND	-286.35	-36.70	5.20	385.35	0.000	0.000	137.14	0.00	0.0000	0.0000	0.0000	0.00
76	SAGBEND	-292.37	-37.23	4.96	391.40	0.000	0.000	137.09	0.00	0.0000	0.0000	0.0000	0.00
77	SAGBEND	-298.40	-37.74	4.72	397.45	0.000	0.000	137.04	0.00	0.0000	0.0000	0.0000	0.00
78	SAGBEND	-304.43	-38.23	4.49	403.50	0.000	0.000	137.00	0.00	0.0000	0.0000	0.0000	0.00
79	SAGBEND	-310.47	-38.69	4.25	409.55	0.000	0.000	136.96	0.00	0.0000	0.0000	0.0000	0.00
80	SAGBEND	-316.50	-39.13	4.01	415.60	0.000	0.000	136.91	0.00	0.0000	0.0000	0.0000	0.00
81	SAGBEND	-322.54	-39.54	3.77	421.65	0.000	0.000	136.88	0.00	0.0000	0.0000	0.0000	0.00
82	SAGBEND	-328.57	-39.92	3.53	427.70	0.000	0.000	136.84	0.00	0.0000	0.0000	0.0000	0.00
83	SAGBEND	-334.61	-40.28	3.29	433.75	0.000	0.000	136.81	0.00	0.0000	0.0000	0.0000	0.00
84	SAGBEND	-340.65	-40.62	3.05	439.80	0.000	0.000	136.77	0.00	0.0000	0.0000	0.0000	0.00
85	SAGBEND	-346.70	-40.93	2.81	445.85	0.000	0.000	136.74	0.00	0.0000	0.0000	0.0000	0.00
86	SAGBEND	-352.74	-41.21	2.58	451.90	0.000	0.000	136.72	0.00	0.0000	0.0000	0.0000	0.00
87	SAGBEND	-358.78	-41.47	2.34	457.95	0.000	0.000	136.69	0.00	0.0000	0.0000	0.0000	0.00
88	SAGBEND	-364.83	-41.70	2.10	464.00	0.000	0.000	136.67	0.00	0.0000	0.0000	0.0000	0.00
89	SAGBEND	-370.87	-41.91	1.86	470.05	0.000	0.000	136.65	0.00	0.0000	0.0000	0.0000	0.00
90	SAGBEND	-376.92	-42.10	1.62	476.10	0.000	0.000	136.63	0.00	0.0000	0.0000	0.0000	0.00
91	SAGBEND	-382.97	-42.25	1.38	482.15	0.000	0.000	136.62	0.00	0.0000	0.0000	0.0000	0.00
92	SAGBEND	-389.02	-42.39	1.14	488.20	0.000	0.000	136.61	0.00	0.0000	0.0000	0.0000	0.00
93	SAGBEND	-395.07	-42.49	0.90	494.25	0.000	0.000	136.60	0.00	0.0000	0.0000	0.0000	0.00
94	SAGBEND	-401.12	-42.58	0.66	500.30	0.000	0.000	136.59	0.00	0.0000	0.0000	0.0000	0.00
95	SAGBEND	-407.17	-42.63	0.42	506.35	0.000	0.000	136.58	0.00	0.0000	0.0000	0.0000	0.00
96	SAGBEND	-413.22	-42.66	0.18	512.40	0.031	0.000	136.58	0.00	0.0000	0.0000	0.0000	0.00
97	SEABED	-419.27	-42.67	0.02	518.45	0.412	0.000	136.58	0.00	0.0000	0.0000	0.0000	0.00
98	SEABED	-425.32	-42.67	0.00	524.50	0.560	0.000	136.58	0.00	0.0000	0.0000	0.0000	0.00
99	SEABED	-431.37	-42.67	0.00	530.55	0.571	0.000	136.58	0.00	0.0000	0.0000	0.0000	0.00
100	SEABED	-437.42	-42.67	0.00	536.60	0.572	0.000	136.58	0.00	0.0000	0.0000	0.0000	0.00
101	SEABED	-443.47	-42.67	0.00	542.65	0.572	0.000	136.58	0.00	0.0000	0.0000	0.0000	0.00
102	SEABED	-449.52	-42.67	0.00	548.70	0.572	0.000	136.58	0.00	0.0000	0.0000	0.0000	0.00
103	SEABED	-455.56	-42.67	0.00	554.75	0.572	0.000	136.58	0.00	0.0000	0.0000	0.0000	0.00
104	SEABED	-461.61	-42.67	0.00	560.80	0.572	0.000	136.58	0.00	0.0000	0.0000	0.0000	0.00

S T A T I C P I P E C O O R D I N A T E S, F O R C E S A N D S T R A I N S

NODE	PIPE	X	Y	VERT	PIPE	SUPPORT	SEPARA	AXIAL	BENDING	TENSILE	BENDING	TOTAL	PERCNT

NO.	SECTION	COORD (M)	COORD (M)	ANGLE (DEG)	LENGTH (M)	REACTION (KN)	-TION (M)	TENSION (KN)	MOMENT (KN-M)	STRAIN (PCT)	STRAIN (PCT)	STRAIN (PCT)	ALLOW (PCT)
105	SEABED	-467.66	-42.67	0.00	566.85	0.572	0.000	136.58	0.00	0.0000	0.0000	0.0000	0.00
106	SEABED	-473.71	-42.67	0.00	572.90	0.572	0.000	136.58	0.00	0.0000	0.0000	0.0000	0.00
107	SEABED	-479.76	-42.67	0.00	578.95	0.572	0.000	136.58	0.00	0.0000	0.0000	0.0000	0.00
108	SEABED	-485.81	-42.67	0.00	585.00	0.572	0.000	136.58	0.00	0.0000	0.0000	0.0000	0.00
109	SEABED	-491.86	-42.67	0.00	591.05	0.572	0.000	136.58	0.00	0.0000	0.0000	0.0000	0.00
110	SEABED	-497.91	-42.67	0.00	597.09	0.572	0.000	136.58	0.00	0.0000	0.0000	0.0000	0.00
111	SEABED	-503.96	-42.67	0.00	603.14	0.572	0.000	136.58	0.00	0.0000	0.0000	0.0000	0.00
112	SEABED	-510.01	-42.67	0.00	609.19	0.572	0.000	136.58	0.00	0.0000	0.0000	0.0000	0.00
113	SEABED	-516.06	-42.67	0.00	615.24	0.572	0.000	136.58	0.00	0.0000	0.0000	0.0000	0.00
114	SEABED	-522.11	-42.67	0.00	621.29	0.572	0.000	136.58	0.00	0.0000	0.0000	0.0000	0.00
115	SEABED	-528.16	-42.67	0.00	627.34	0.572	0.000	136.58	0.00	0.0000	0.0000	0.0000	0.00
116	SEABED	-534.21	-42.67	0.00	633.39	0.572	0.000	136.58	0.00	0.0000	0.0000	0.0000	0.00
117	SEABED	-540.26	-42.67	0.00	639.44	0.572	0.000	136.58	0.00	0.0000	0.0000	0.0000	0.00
118	SEABED	-546.31	-42.67	0.00	645.49	0.572	0.000	136.58	0.00	0.0000	0.0000	0.0000	0.00
119	SEABED	-552.36	-42.67	0.00	651.54	0.572	0.000	136.58	0.00	0.0000	0.0000	0.0000	0.00
120	SEABED	-558.41	-42.67	0.00	657.59	0.572	0.000	136.58	0.00	0.0000	0.0000	0.0000	0.00
121	SEABED	-564.46	-42.67	0.00	663.64	0.572	0.000	136.58	0.00	0.0000	0.0000	0.0000	0.00
122	SEABED	-570.51	-42.67	0.00	669.69	0.572	0.000	136.58	0.00	0.0000	0.0000	0.0000	0.00
123	SEABED	-576.56	-42.67	0.00	675.74	0.572	0.000	136.58	0.00	0.0000	0.0000	0.0000	0.00
124	SEABED	-582.61	-42.67	0.00	681.79	0.572	0.000	136.58	0.00	0.0000	0.0000	0.0000	0.00
125	SEABED	-588.66	-42.67	0.00	687.84	0.572	0.000	136.58	0.00	0.0000	0.0000	0.0000	0.00
126	SEABED	-594.71	-42.67	0.00	693.89	0.572	0.000	136.58	0.00	0.0000	0.0000	0.0000	0.00
127	SEABED	-600.76	-42.67	0.00	699.94	0.572	0.000	136.58	0.00	0.0000	0.0000	0.0000	0.00
128	SEABED	-606.81	-42.67	0.00	705.99	0.572	0.000	136.58	0.00	0.0000	0.0000	0.0000	0.00
129	SEABED	-612.86	-42.67	0.00	712.04	0.571	0.000	136.58	0.00	0.0000	0.0000	0.0000	0.00
130	SEABED	-618.91	-42.67	0.00	718.09	0.567	0.000	136.58	0.00	0.0000	0.0000	0.0000	0.00
131	SEABED	-624.96	-42.67	-0.01	724.14	0.506	0.000	136.58	0.00	0.0000	0.0000	0.0000	0.00
132	SEABED	-630.92	-42.67	-0.08	730.10	0.000	0.000	136.58	0.00	0.0000	0.0000	0.0000	0.00

S T A T I C P I P E C O O R D I N A T E S, F O R C E S A N D S T R A I N S

NODE NO.	PIPE SECTION	X COORD (M)	Y COORD (M)	VERT ANGLE (DEG)	PIPE LENGTH (M)	SUPPORT REACTION (KN)	SEPARA -TION (M)	AXIAL TENSION (KN)	BENDING MOMENT (KN-M)	TENSILE STRAIN (PCT)	BENDING STRAIN (PCT)	TOTAL STRAIN (PCT)	PERCNT ALLOW (PCT)
1	LAYBARGE	96.31	6.41	1.93	0.00	9.927	0.000	0.00	2.74	0.0000	0.0021	0.0021	0.00
3	LAYBARGE	84.28	6.05	1.58	12.04	24.179	0.000	-0.73	-19.25	0.0000	-0.0144	0.0144	0.00
5	LAYBARGE	73.45	5.73	1.90	22.87	24.286	0.000	-1.39	-29.23	-0.0001	-0.0219	0.0219	0.00
7	TENSIONR	60.10	5.24	2.31	36.23	32.350	0.000	153.42	-23.87	0.0071	-0.0179	0.0250	0.00
9	LAYBARGE	51.10	4.87	2.20	45.24	0.000	0.000	152.69	31.11	0.0071	0.0233	0.0304	0.00
10	LAYBARGE	46.45	4.70	1.90	49.89	8.246	0.000	152.37	15.07	0.0071	0.0113	0.0184	0.00
12	LAYBARGE	35.36	4.31	2.69	60.99	38.102	0.000	151.31	-85.43	0.0070	-0.0639	0.0709	0.00
14	LAYBARGE	25.34	3.64	4.98	71.03	28.966	0.000	149.99	-99.49	0.0070	-0.0744	0.0814	0.00
16	LAYBARGE	19.31	3.05	6.11	77.09	0.000	0.000	149.00	-53.84	0.0069	-0.0403	0.0472	0.00
17	LAYBARGE	8.88	1.76	8.54	87.60	56.368	0.000	145.79	-158.25	0.0068	-0.1187	0.1255	0.00
19	LAYBARGE	4.90	1.11	9.78	91.63	0.000	0.000	145.05	-73.29	0.0067	-0.0548	0.0616	0.00
20	LAYBARGE	3.08	0.79	10.04	93.48	0.000	0.172	144.49	-41.26	0.0067	-0.0309	0.0376	0.00
24	STINGER	-7.61	-1.11	9.68	104.34	0.000	0.149	141.80	41.37	0.0066	0.0309	0.0375	0.00
26	STINGER	-16.64	-2.57	8.85	113.49	4.720	0.000	140.36	19.13	0.0065	0.0143	0.0208	0.00
29	STINGER	-26.31	-4.06	8.90	123.27	21.139	0.000	138.85	-38.42	0.0063	-0.0287	0.0352	0.00
31	STINGER	-37.10	-5.78	9.05	134.20	0.000	0.039	137.16	7.53	0.0062	0.0056	0.0120	0.00
33	STINGER	-40.06	-6.25	9.01	137.19	0.000	0.503	136.69	0.00	0.0062	0.0000	0.0064	0.00
35	SAGBEND	-46.17	-7.04	7.35	143.36	0.000	0.000	136.75	0.00	0.0000	0.0000	0.0000	0.00
36	SAGBEND	-52.17	-7.82	7.34	149.41	0.000	0.000	136.75	0.00	0.0000	0.0000	0.0000	0.00
37	SAGBEND	-58.17	-8.59	7.33	155.46	0.000	0.000	136.74	0.00	0.0000	0.0000	0.0000	0.00
38	SAGBEND	-64.17	-9.36	7.33	161.51	0.000	0.000	136.74	0.00	0.0000	0.0000	0.0000	0.00
39	SAGBEND	-70.17	-10.13	7.32	167.55	0.000	0.000	136.74	0.00	0.0000	0.0000	0.0000	0.00
40	SAGBEND	-76.17	-10.90	7.31	173.60	0.000	0.000	136.74	0.00	0.0000	0.0000	0.0000	0.00
41	SAGBEND	-82.17	-11.67	7.31	179.65	0.000	0.000	136.74	0.00	0.0000	0.0000	0.0000	0.00
42	SAGBEND	-88.18	-12.44	7.30	185.70	0.000	0.000	136.73	0.00	0.0000	0.0000	0.0000	0.00
43	SAGBEND	-94.18	-13.21	7.29	191.75	0.000	0.000	136.73	0.00	0.0000	0.0000	0.0000	0.00
44	SAGBEND	-100.18	-13.98	7.29	197.80	0.000	0.000	136.73	0.00	0.0000	0.0000	0.0000	0.00
45	SAGBEND	-106.18	-14.74	7.28	203.85	0.000	0.000	136.73	0.00	0.0000	0.0000	0.0000	0.00
46	SAGBEND	-112.18	-15.51	7.27	209.90	0.000	0.000	136.73	0.00	0.0000	0.0000	0.0000	0.00
47	SAGBEND	-118.18	-16.28	7.27	215.95	0.000	0.000	136.72	0.00	0.0000	0.0000	0.0000	0.00
48	SAGBEND	-124.18	-17.04	7.26	222.00	0.000	0.000	136.72	0.00	0.0000	0.0000	0.0000	0.00
49	SAGBEND	-130.18	-17.81	7.25	228.05	0.000	0.000	136.72	0.00	0.0000	0.0000	0.0000	0.00
50	SAGBEND	-136.19	-18.57	7.25	234.10	0.000	0.000	136.72	0.00	0.0000	0.0000	0.0000	0.00
51	SAGBEND	-142.19	-19.33	7.24	240.15	0.000	0.000	136.72	0.00	0.0000	0.0000	0.0000	0.00
52	SAGBEND	-148.19	-20.10	7.24	246.20	0.000	0.000	136.71	0.00	0.0000	0.0000	0.0000	0.00
53	SAGBEND	-154.19	-20.86	7.23	252.25	0.000	0.000	136.71	0.00	0.0000	0.0000	0.0000	0.00
54	SAGBEND	-160.19	-21.62	7.22	258.30	0.000	0.000	136.71	0.00	0.0000	0.0000	0.0000	0.00
55	SAGBEND	-166.19	-22.38	7.22	264.35	0.000	0.000	136.71	0.00	0.0000	0.0000	0.0000	0.00
56	SAGBEND	-172.20	-23.14	7.21	270.40	0.000	0.000	136.71	0.00	0.0000	0.0000	0.0000	0.00
57	SAGBEND	-178.20	-23.90	7.20	276.45	0.000	0.000	136.70	0.00	0.0000	0.0000	0.0000	0.00
58	SAGBEND	-184.20	-24.65	7.20	282.50	0.000	0.000	136.70	0.00	0.0000	0.0000	0.0000	0.00
59	SAGBEND	-190.20	-25.41	7.19	288.55	0.000	0.000	136.70	0.00	0.0000	0.0000	0.0000	0.00
60	SAGBEND	-196.21	-26.17	7.18	294.60	0.000	0.000	136.70	0.00	0.0000	0.0000	0.0000	0.00

S T A T I C P I P E C O O R D I N A T E S, F O R C E S A N D S T R A I N S

NODE NO.	PIPE SECTION	X COORD (M)	Y COORD (M)	VERT ANGLE (DEG)	PIPE LENGTH (M)	SUPPORT REACTION (KN)	SEPARA -TION (M)	AXIAL TENSION (KN)	BENDING MOMENT (KN-M)	TENSILE STRAIN (PCT)	BENDING STRAIN (PCT)	TOTAL STRAIN (PCT)	PERCNT ALLOW (PCT)
61	SAGBEND	-202.21	-26.92	7.18	300.65	0.000	0.000	136.70	0.00	0.0000	0.0000	0.0000	0.00
62	SAGBEND	-208.21	-27.68	7.17	306.70	0.000	0.000	136.69	0.00	0.0000	0.0000	0.0000	0.00
63	SAGBEND	-214.21	-28.43	7.16	312.75	0.000	0.000	136.69	0.00	0.0000	0.0000	0.0000	0.00
64	SAGBEND	-220.22	-29.19	7.16	318.80	0.000	0.000	136.69	0.00	0.0000	0.0000	0.0000	0.00
65	SAGBEND	-226.22	-29.94	7.15	324.85	0.000	0.000	136.69	0.00	0.0000	0.0000	0.0000	0.00
66	SAGBEND	-232.22	-30.69	7.14	330.90	0.000	0.000	136.69	0.00	0.0000	0.0000	0.0000	0.00
67	SAGBEND	-235.30	-31.08	7.14	334.01	0.000	0.000	136.69	0.00	0.0000	0.0000	0.0000	0.00
68	SAGBEND	-238.38	-31.47	7.14	337.11	0.000	0.000	136.68	0.00	0.0000	0.0000	0.0000	0.00
69	SAGBEND	-244.23	-32.19	6.90	343.00	0.000	0.000	136.62	0.00	0.0000	0.0000	0.0000	0.00
70	SAGBEND	-250.24	-32.90	6.67	349.05	0.000	0.000	136.55	0.00	0.0000	0.0000	0.0000	0.00
71	SAGBEND	-256.25	-33.59	6.43	355.10	0.000	0.000	136.48	0.00	0.0000	0.0000	0.0000	0.00
72	SAGBEND	-262.26	-34.26	6.19	361.15	0.000	0.000	136.42	0.00	0.0000	0.0000	0.0000	0.00
73	SAGBEND	-268.28	-34.90	5.95	367.20	0.000	0.000	136.36	0.00	0.0000	0.0000	0.0000	0.00
74	SAGBEND	-274.30	-35.51	5.71	373.25	0.000	0.000	136.30	0.00	0.0000	0.0000	0.0000	0.00
75	SAGBEND	-280.32	-36.10	5.47	379.30	0.000	0.000	136.25	0.00	0.0000	0.0000	0.0000	0.00
76	SAGBEND	-286.34	-36.66	5.23	385.35	0.000	0.000	136.19	0.00	0.0000	0.0000	0.0000	0.00
77	SAGBEND	-292.37	-37.20	4.99	391.40	0.000	0.000	136.14	0.00	0.0000	0.0000	0.0000	0.00
78	SAGBEND	-298.39	-37.72	4.75	397.45	0.000	0.000	136.09	0.00	0.0000	0.0000	0.0000	0.00
79	SAGBEND	-304.42	-38.21	4.51	403.50	0.000	0.000	136.05	0.00	0.0000	0.0000	0.0000	0.00
80	SAGBEND	-310.46	-38.67	4.27	409.55	0.000	0.000	136.00	0.00	0.0000	0.0000	0.0000	0.00
81	SAGBEND	-316.49	-39.11	4.03	415.60	0.000	0.000	135.96	0.00	0.0000	0.0000	0.0000	0.00
82	SAGBEND	-322.53	-39.52	3.79	421.65	0.000	0.000	135.92	0.00	0.0000	0.0000	0.0000	0.00
83	SAGBEND	-328.56	-39.91	3.55	427.70	0.000	0.000	135.89	0.00	0.0000	0.0000	0.0000	0.00
84	SAGBEND	-334.60	-40.27	3.31	433.75	0.000	0.000	135.85	0.00	0.0000	0.0000	0.0000	0.00
85	SAGBEND	-340.64	-40.61	3.07	439.80	0.000	0.000	135.82	0.00	0.0000	0.0000	0.0000	0.00
86	SAGBEND	-346.68	-40.92	2.83	445.85	0.000	0.000	135.79	0.00	0.0000	0.0000	0.0000	0.00
87	SAGBEND	-352.73	-41.20	2.59	451.90	0.000	0.000	135.76	0.00	0.0000	0.0000	0.0000	0.00
88	SAGBEND	-358.77	-41.47	2.35	457.95	0.000	0.000	135.74	0.00	0.0000	0.0000	0.0000	0.00
89	SAGBEND	-364.82	-41.70	2.11	464.00	0.000	0.000	135.72	0.00	0.0000	0.0000	0.0000	0.00
90	SAGBEND	-370.86	-41.91	1.87	470.05	0.000	0.000	135.70	0.00	0.0000	0.0000	0.0000	0.00
91	SAGBEND	-376.91	-42.09	1.62	476.10	0.000	0.000	135.68	0.00	0.0000	0.0000	0.0000	0.00
92	SAGBEND	-382.96	-42.25	1.38	482.15	0.000	0.000	135.67	0.00	0.0000	0.0000	0.0000	0.00
93	SAGBEND	-389.01	-42.39	1.14	488.20	0.000	0.000	135.65	0.00	0.0000	0.0000	0.0000	0.00
94	SAGBEND	-395.06	-42.49	0.90	494.25	0.000	0.000	135.64	0.00	0.0000	0.0000	0.0000	0.00
95	SAGBEND	-401.11	-42.58	0.66	500.30	0.000	0.000	135.63	0.00	0.0000	0.0000	0.0000	0.00
96	SAGBEND	-407.15	-42.63	0.42	506.35	0.000	0.000	135.63	0.00	0.0000	0.0000	0.0000	0.00
97	SAGBEND	-413.20	-42.66	0.18	512.40	0.034	0.000	135.63	0.00	0.0000	0.0000	0.0000	0.00
98	SEABED	-419.25	-42.67	0.01	518.45	0.418	0.000	135.63	0.00	0.0000	0.0000	0.0000	0.00
99	SEABED	-425.30	-42.67	0.00	524.50	0.561	0.000	135.63	0.00	0.0000	0.0000	0.0000	0.00
100	SEABED	-431.35	-42.67	0.00	530.55	0.571	0.000	135.63	0.00	0.0000	0.0000	0.0000	0.00
101	SEABED	-437.40	-42.67	0.00	536.60	0.572	0.000	135.63	0.00	0.0000	0.0000	0.0000	0.00
102	SEABED	-443.45	-42.67	0.00	542.65	0.572	0.000	135.63	0.00	0.0000	0.0000	0.0000	0.00
103	SEABED	-449.50	-42.67	0.00	548.70	0.572	0.000	135.63	0.00	0.0000	0.0000	0.0000	0.00
104	SEABED	-455.55	-42.67	0.00	554.75	0.572	0.000	135.63	0.00	0.0000	0.0000	0.0000	0.00

S T A T I C P I P E C O O R D I N A T E S, F O R C E S A N D S T R A I N S

NODE NO.	PIPE SECTION	X COORD (M)	Y COORD (M)	VERT ANGLE (DEG)	PIPE LENGTH (M)	SUPPORT REACTION (KN)	SEPARA -TION (M)	AXIAL TENSION (KN)	BENDING MOMENT (KN-M)	TENSILE STRAIN (PCT)	BENDING STRAIN (PCT)	TOTAL STRAIN (PCT)	PERCNT ALLOW (PCT)
105	SEABED	-461.60	-42.67	0.00	560.80	0.572	0.000	135.63	0.00	0.0000	0.0000	0.0000	0.00
106	SEABED	-467.65	-42.67	0.00	566.85	0.572	0.000	135.63	0.00	0.0000	0.0000	0.0000	0.00
107	SEABED	-473.70	-42.67	0.00	572.90	0.572	0.000	135.63	0.00	0.0000	0.0000	0.0000	0.00
108	SEABED	-479.75	-42.67	0.00	578.95	0.572	0.000	135.63	0.00	0.0000	0.0000	0.0000	0.00
109	SEABED	-485.80	-42.67	0.00	585.00	0.572	0.000	135.63	0.00	0.0000	0.0000	0.0000	0.00
110	SEABED	-491.85	-42.67	0.00	591.05	0.572	0.000	135.63	0.00	0.0000	0.0000	0.0000	0.00
111	SEABED	-497.90	-42.67	0.00	597.10	0.572	0.000	135.63	0.00	0.0000	0.0000	0.0000	0.00
112	SEABED	-503.95	-42.67	0.00	603.15	0.572	0.000	135.63	0.00	0.0000	0.0000	0.0000	0.00
113	SEABED	-510.00	-42.67	0.00	609.20	0.572	0.000	135.63	0.00	0.0000	0.0000	0.0000	0.00

114	SEABED	-516.05	-42.67	0.00	615.25	0.572	0.000	135.63	0.00	0.0000	0.0000	0.0000	0.00
115	SEABED	-522.10	-42.67	0.00	621.30	0.572	0.000	135.63	0.00	0.0000	0.0000	0.0000	0.00
116	SEABED	-528.15	-42.67	0.00	627.35	0.572	0.000	135.63	0.00	0.0000	0.0000	0.0000	0.00
117	SEABED	-534.20	-42.67	0.00	633.40	0.572	0.000	135.63	0.00	0.0000	0.0000	0.0000	0.00
118	SEABED	-540.25	-42.67	0.00	639.45	0.572	0.000	135.63	0.00	0.0000	0.0000	0.0000	0.00
119	SEABED	-546.30	-42.67	0.00	645.50	0.572	0.000	135.63	0.00	0.0000	0.0000	0.0000	0.00
120	SEABED	-552.35	-42.67	0.00	651.55	0.572	0.000	135.63	0.00	0.0000	0.0000	0.0000	0.00
121	SEABED	-558.40	-42.67	0.00	657.60	0.572	0.000	135.63	0.00	0.0000	0.0000	0.0000	0.00
122	SEABED	-564.45	-42.67	0.00	663.65	0.572	0.000	135.63	0.00	0.0000	0.0000	0.0000	0.00
123	SEABED	-570.50	-42.67	0.00	669.70	0.572	0.000	135.63	0.00	0.0000	0.0000	0.0000	0.00
124	SEABED	-576.55	-42.67	0.00	675.75	0.572	0.000	135.63	0.00	0.0000	0.0000	0.0000	0.00
125	SEABED	-582.60	-42.67	0.00	681.80	0.572	0.000	135.63	0.00	0.0000	0.0000	0.0000	0.00
126	SEABED	-588.65	-42.67	0.00	687.85	0.572	0.000	135.63	0.00	0.0000	0.0000	0.0000	0.00
127	SEABED	-594.70	-42.67	0.00	693.90	0.572	0.000	135.63	0.00	0.0000	0.0000	0.0000	0.00
128	SEABED	-600.75	-42.67	0.00	699.95	0.572	0.000	135.63	0.00	0.0000	0.0000	0.0000	0.00
129	SEABED	-606.80	-42.67	0.00	706.00	0.572	0.000	135.63	0.00	0.0000	0.0000	0.0000	0.00
130	SEABED	-612.85	-42.67	0.00	712.05	0.572	0.000	135.63	0.00	0.0000	0.0000	0.0000	0.00
131	SEABED	-618.90	-42.67	0.00	718.10	0.571	0.000	135.63	0.00	0.0000	0.0000	0.0000	0.00
132	SEABED	-624.95	-42.67	0.00	724.15	0.569	0.000	135.63	0.00	0.0000	0.0000	0.0000	0.00
133	SEABED	-631.00	-42.67	0.00	730.20	0.430	0.000	135.63	0.00	0.0000	0.0000	0.0000	0.00
134	SEABED	-634.46	-42.67	-0.02	733.65	0.246	0.000	135.63	0.00	0.0000	0.0000	0.0000	0.00
135	SEABED	-637.91	-42.67	-0.09	737.11	0.000	0.000	135.63	0.00	0.0000	0.0000	0.0000	0.00

S T A T I C P I P E C O O R D I N A T E S, F O R C E S A N D S T R A I N S

NODE NO.	PIPE SECTION	X COORD (M)	Y COORD (M)	VERT ANGLE (DEG)	PIPE LENGTH (M)	SUPPORT REACTION (KN)	SEPARA -TION (M)	AXIAL TENSION (KN)	BENDING MOMENT (KN-M)	TENSILE STRAIN (PCT)	BENDING STRAIN (PCT)	TOTAL STRAIN (PCT)	PERCNT ALLOW (PCT)
1	LAYBARGE	96.31	6.41	1.93	0.00	9.928	0.000	0.00	2.74	0.0000	0.0021	0.0021	0.00
3	LAYBARGE	84.28	6.05	1.58	12.04	24.171	0.000	-0.73	-19.24	0.0000	-0.0144	0.0144	0.00
5	LAYBARGE	73.45	5.73	1.90	22.87	24.311	0.000	-1.39	-29.28	-0.0001	-0.0219	0.0220	0.00
7	TENSIONR	60.10	5.24	2.31	36.23	32.302	0.000	177.52	-23.71	0.0083	-0.0177	0.0260	0.00
9	LAYBARGE	51.10	4.87	2.20	45.24	0.000	0.000	176.79	30.70	0.0082	0.0230	0.0312	0.00
10	LAYBARGE	46.45	4.70	1.90	49.89	8.194	0.000	176.47	14.99	0.0082	0.0112	0.0194	0.00
12	LAYBARGE	35.36	4.31	2.68	60.99	38.237	0.000	175.42	-84.89	0.0082	-0.0635	0.0716	0.00
14	LAYBARGE	25.34	3.64	5.01	71.03	31.801	0.000	174.06	-104.26	0.0081	-0.0780	0.0861	0.00
16	LAYBARGE	19.31	3.04	6.16	77.09	0.000	0.000	173.09	-51.32	0.0081	-0.0384	0.0464	0.00
17	LAYBARGE	8.88	1.76	8.37	87.60	55.071	0.000	169.99	-145.78	0.0079	-0.1091	0.1170	0.00
19	LAYBARGE	4.90	1.12	9.49	91.63	0.000	0.000	169.21	-63.14	0.0079	-0.0472	0.0551	0.00
20	LAYBARGE	3.08	0.82	9.72	93.48	0.000	0.198	168.66	-32.44	0.0078	-0.0243	0.0321	0.00
24	STINGER	-7.57	-0.99	9.22	104.28	0.000	0.185	166.01	43.15	0.0077	0.0323	0.0400	0.00
26	STINGER	-16.61	-2.38	8.38	113.43	4.911	0.000	164.65	18.69	0.0076	0.0140	0.0216	0.00
29	STINGER	-26.32	-3.80	8.42	123.23	21.108	0.000	163.22	-37.80	0.0075	-0.0283	0.0359	0.00
31	STINGER	-37.13	-5.43	8.56	134.17	0.000	0.082	161.61	7.72	0.0074	0.0058	0.0133	0.00
33	STINGER	-40.13	-5.88	8.52	137.20	0.000	0.559	161.17	0.00	0.0073	0.0000	0.0075	0.00
35	SAGBEND	-46.23	-6.64	7.09	143.36	0.000	0.000	161.21	0.00	0.0000	0.0000	0.0000	0.00
36	SAGBEND	-52.24	-7.39	7.09	149.41	0.000	0.000	161.21	0.00	0.0000	0.0000	0.0000	0.00
37	SAGBEND	-58.24	-8.13	7.08	155.46	0.000	0.000	161.21	0.00	0.0000	0.0000	0.0000	0.00
38	SAGBEND	-64.25	-8.88	7.08	161.50	0.000	0.000	161.21	0.00	0.0000	0.0000	0.0000	0.00
39	SAGBEND	-70.25	-9.63	7.07	167.55	0.000	0.000	161.21	0.00	0.0000	0.0000	0.0000	0.00
40	SAGBEND	-76.25	-10.37	7.06	173.60	0.000	0.000	161.20	0.00	0.0000	0.0000	0.0000	0.00
41	SAGBEND	-82.26	-11.11	7.06	179.65	0.000	0.000	161.20	0.00	0.0000	0.0000	0.0000	0.00
42	SAGBEND	-88.26	-11.86	7.05	185.70	0.000	0.000	161.20	0.00	0.0000	0.0000	0.0000	0.00
43	SAGBEND	-94.27	-12.60	7.05	191.75	0.000	0.000	161.20	0.00	0.0000	0.0000	0.0000	0.00
44	SAGBEND	-100.27	-13.34	7.04	197.80	0.000	0.000	161.20	0.00	0.0000	0.0000	0.0000	0.00
45	SAGBEND	-106.27	-14.08	7.04	203.85	0.000	0.000	161.19	0.00	0.0000	0.0000	0.0000	0.00
46	SAGBEND	-112.28	-14.82	7.03	209.90	0.000	0.000	161.19	0.00	0.0000	0.0000	0.0000	0.00
47	SAGBEND	-118.28	-15.56	7.03	215.95	0.000	0.000	161.19	0.00	0.0000	0.0000	0.0000	0.00
48	SAGBEND	-124.29	-16.30	7.02	222.00	0.000	0.000	161.19	0.00	0.0000	0.0000	0.0000	0.00
49	SAGBEND	-130.29	-17.04	7.01	228.05	0.000	0.000	161.19	0.00	0.0000	0.0000	0.0000	0.00
50	SAGBEND	-136.30	-17.78	7.01	234.10	0.000	0.000	161.18	0.00	0.0000	0.0000	0.0000	0.00
51	SAGBEND	-142.30	-18.52	7.00	240.15	0.000	0.000	161.18	0.00	0.0000	0.0000	0.0000	0.00
52	SAGBEND	-148.31	-19.26	7.00	246.20	0.000	0.000	161.18	0.00	0.0000	0.0000	0.0000	0.00
53	SAGBEND	-154.31	-19.99	6.99	252.25	0.000	0.000	161.18	0.00	0.0000	0.0000	0.0000	0.00
54	SAGBEND	-160.32	-20.73	6.99	258.30	0.000	0.000	161.18	0.00	0.0000	0.0000	0.0000	0.00
55	SAGBEND	-166.32	-21.47	6.98	264.35	0.000	0.000	161.17	0.00	0.0000	0.0000	0.0000	0.00
56	SAGBEND	-172.33	-22.20	6.98	270.40	0.000	0.000	161.17	0.00	0.0000	0.0000	0.0000	0.00
57	SAGBEND	-178.33	-22.93	6.97	276.45	0.000	0.000	161.17	0.00	0.0000	0.0000	0.0000	0.00
58	SAGBEND	-184.34	-23.67	6.96	282.50	0.000	0.000	161.17	0.00	0.0000	0.0000	0.0000	0.00
59	SAGBEND	-190.34	-24.40	6.96	288.55	0.000	0.000	161.17	0.00	0.0000	0.0000	0.0000	0.00
60	SAGBEND	-196.35	-25.13	6.95	294.60	0.000	0.000	161.17	0.00	0.0000	0.0000	0.0000	0.00

S T A T I C P I P E C O O R D I N A T E S, F O R C E S A N D S T R A I N S

NODE NO.	PIPE SECTION	X COORD (M)	Y COORD (M)	VERT ANGLE (DEG)	PIPE LENGTH (M)	SUPPORT REACTION (KN)	SEPARA -TION (M)	AXIAL TENSION (KN)	BENDING MOMENT (KN-M)	TENSILE STRAIN (PCT)	BENDING STRAIN (PCT)	TOTAL STRAIN (PCT)	PERCNT ALLOW (PCT)
61	SAGBEND	-202.35	-25.87	6.95	300.65	0.000	0.000	161.16	0.00	0.0000	0.0000	0.0000	0.00
62	SAGBEND	-208.36	-26.60	6.94	306.70	0.000	0.000	161.16	0.00	0.0000	0.0000	0.0000	0.00
63	SAGBEND	-214.37	-27.33	6.94	312.75	0.000	0.000	161.16	0.00	0.0000	0.0000	0.0000	0.00
64	SAGBEND	-220.37	-28.06	6.93	318.80	0.000	0.000	161.16	0.00	0.0000	0.0000	0.0000	0.00
65	SAGBEND	-226.38	-28.79	6.93	324.85	0.000	0.000	161.16	0.00	0.0000	0.0000	0.0000	0.00
66	SAGBEND	-232.38	-29.52	6.92	330.90	0.000	0.000	161.15	0.00	0.0000	0.0000	0.0000	0.00
67	SAGBEND	-235.46	-29.89	6.92	334.01	0.000	0.000	161.15	0.00	0.0000	0.0000	0.0000	0.00
68	SAGBEND	-238.55	-30.27	6.91	337.11	0.000	0.000	161.15	0.00	0.0000	0.0000	0.0000	0.00
69	SAGBEND	-244.40	-30.97	6.72	343.00	0.000	0.000	161.09	0.00	0.0000	0.0000	0.0000	0.00
70	SAGBEND	-250.41	-31.66	6.52	349.05	0.000	0.000	161.02	0.00	0.0000	0.0000	0.0000	0.00
71	SAGBEND	-256.42	-32.34	6.31	355.10	0.000	0.000	160.96	0.00	0.0000	0.0000	0.0000	0.00
72	SAGBEND	-262.43	-32.99	6.11	361.15	0.000	0.000	160.89	0.00	0.0000	0.0000	0.0000	0.00
73	SAGBEND	-268.45	-33.63	5.91	367.20	0.000	0.000	160.83	0.00	0.0000	0.0000	0.0000	0.00
74	SAGBEND	-274.47	-34.24	5.71	373.25	0.000	0.000	160.78	0.00	0.0000	0.0000	0.0000	0.00
75	SAGBEND	-280.49	-34.83	5.50	379.30	0.000	0.000	160.72	0.00	0.0000	0.0000	0.0000	0.00
76	SAGBEND	-286.51	-35.40	5.30	385.35	0.000	0.000	160.67	0.00	0.0000	0.0000	0.0000	0.00
77	SAGBEND	-292.54	-35.95	5.10	391.40	0.000	0.000	160.62	0.00	0.0000	0.0000	0.0000	0.00
78	SAGBEND	-298.56	-36.47	4.89	397.45	0.000	0.000	160.57	0.00	0.0000	0.0000	0.0000	0.00
79	SAGBEND	-304.59	-36.98	4.69	403.50	0.000	0.000	160.52	0.00	0.0000	0.0000	0.0000	0.00
80	SAGBEND	-310.62	-37.46	4.49	409.55	0.000	0.000	160.47	0.00	0.0000	0.0000	0.0000	0.00
81	SAGBEND	-316.65	-37.93	4.28	415.60	0.000	0.000	160.43	0.00	0.0000	0.0000	0.0000	0.00
82	SAGBEND	-322.69	-38.37	4.08	421.65	0.000	0.000	160.39	0.00	0.0000	0.0000	0.0000	0.00
83	SAGBEND	-328.72	-38.79	3.88	427.70	0.000	0.000	160.35	0.00	0.0000	0.0000	0.0000	0.00
84	SAGBEND	-334.76	-39.19	3.67	433.75	0.000	0.000	160.31	0.00	0.0000	0.0000	0.0000	0.00
85	SAGBEND	-340.80	-39.56	3.47	439.80	0.000	0.000	160.27	0.00	0.0000	0.0000	0.0000	0.00
86	SAGBEND	-346.84	-39.92	3.27	445.85	0.000	0.000	160.24	0.00	0.0000	0.0000	0.0000	0.00
87	SAGBEND	-352.88	-40.25	3.06	451.90	0.000	0.000	160.21	0.00	0.0000	0.0000	0.0000	0.00
88	SAGBEND	-358.92	-40.56	2.86	457.95	0.000	0.000	160.18	0.00	0.0000	0.0000	0.0000	0.00
89	SAGBEND	-364.96	-40.86	2.65	464.00	0.000	0.000	160.15	0.00	0.0000	0.0000	0.0000	0.00
90	SAGBEND	-371.01	-41.12	2.45	470.05	0.000	0.000	160.13	0.00	0.0000	0.0000	0.0000	0.00
91	SAGBEND	-377.05	-41.37	2.24	476.10	0.000	0.000	160.10	0.00	0.0000	0.0000	0.0000	0.00
92	SAGBEND	-383.10	-41.60	2.04	482.15	0.000	0.000	160.08	0.00	0.0000	0.0000	0.0000	0.00
93	SAGBEND	-389.14	-41.80	1.84	488.20	0.000	0.000	160.06	0.00	0.0000	0.0000	0.0000	0.00
94	SAGBEND	-395.19	-41.99	1.63	494.25	0.000	0.000	160.04	0.00	0.0000	0.0000	0.0000	0.00
95	SAGBEND	-401.24	-42.15	1.43	500.30	0.000	0.000	160.03	0.00	0.0000	0.0000	0.0000	0.00
96	SAGBEND	-407.29	-42.29	1.22	506.35	0.000	0.000	160.02	0.00	0.0000	0.0000	0.0000	0.00
97	SAGBEND	-413.34	-42.40	1.02	512.40	0.000	0.000	160.00	0.00	0.0000	0.0000	0.0000	0.00
98	SAGBEND	-419.39	-42.50	0.81	518.45	0.000	0.000	160.00	0.00	0.0000	0.0000	0.0000	0.00
99	SAGBEND	-425.44	-42.58	0.61	524.50	0.000	0.000	159.99	0.00	0.0000	0.0000	0.0000	0.00
100	SAGBEND	-431.48	-42.63	0.40	530.55	0.000	0.000	159.98	0.00	0.0000	0.0000	0.0000	0.00
101	SAGBEND	-437.53	-42.66	0.20	536.60	0.008	0.000	159.98	-0.01	0.0000	0.0000	0.0000	0.00
102	SEABED	-443.58	-42.67	0.02	542.65	0.322	0.000	159.98	0.00	0.0000	0.0000	0.0000	0.00
103	SEABED	-449.63	-42.67	0.00	548.70	0.548	0.000	159.98	0.00	0.0000	0.0000	0.0000	0.00
104	SEABED	-455.68	-42.67	0.00	554.75	0.570	0.000	159.98	0.00	0.0000	0.0000	0.0000	0.00

S T A T I C P I P E C O O R D I N A T E S, F O R C E S A N D S T R A I N S

NODE NO.	PIPE SECTION	X COORD (M)	Y COORD (M)	VERT ANGLE (DEG)	PIPE LENGTH (M)	SUPPORT REACTION (KN)	SEPARA -TION (M)	AXIAL TENSION (KN)	BENDING MOMENT (KN-M)	TENSILE STRAIN (PCT)	BENDING STRAIN (PCT)	TOTAL STRAIN (PCT)	PERCNT ALLOW (PCT)
105	SEABED	-461.73	-42.67	0.00	560.80	0.571	0.000	159.98	0.00	0.0000	0.0000	0.0000	0.00
106	SEABED	-467.78	-42.67	0.00	566.85	0.572	0.000	159.98	0.00	0.0000	0.0000	0.0000	0.00
107	SEABED	-473.83	-42.67	0.00	572.90	0.572	0.000	159.98	0.00	0.0000	0.0000	0.0000	0.00
108	SEABED	-479.88	-42.67	0.00	578.95	0.572	0.000	159.98	0.00	0.0000	0.0000	0.0000	0.00
109	SEABED	-485.93	-42.67	0.00	585.00	0.572	0.000	159.98	0.00	0.0000	0.0000	0.0000	0.00
110	SEABED	-491.98	-42.67	0.00	591.05	0.572	0.000	159.98	0.00	0.0000	0.0000	0.0000	0.00
111	SEABED	-498.03	-42.67	0.00	597.10	0.572	0.000	159.98	0.00	0.0000	0.0000	0.0000	0.00
112	SEABED	-504.08	-42.67	0.00	603.15	0.572	0.000	159.98	0.00	0.0000	0.0000	0.0000	0.00
113	SEABED	-510.13	-42.67	0.00	609.20	0.572	0.000	159.98	0.00	0.0000	0.0000	0.0000	0.00
114	SEABED	-516.18	-42.67	0.00	615.25	0.572	0.000	159.98	0.00	0.0000	0.0000	0.0000	0.00
115	SEABED	-522.23	-42.67	0.00	621.30	0.572	0.000	159.98	0.00	0.0000	0.0000	0.0000	0.00
116	SEABED	-528.28	-42.67	0.00	627.35	0.572	0.000	159.98	0.00	0.0000	0.0000	0.0000	0.00
117	SEABED	-534.33	-42.67	0.00	633.40	0.572	0.000	159.98	0.00	0.0000	0.0000	0.0000	0.00
118	SEABED	-540.38	-42.67	0.00	639.45	0.572	0.000	159.98	0.00	0.0000	0.0000	0.0000	0.00
119	SEABED	-546.43	-42.67	0.00	645.50	0.572	0.000	159.98	0.00	0.0000	0.0000	0.0000	0.00
120	SEABED	-552.48	-42.67	0.00	651.55	0.572	0.000	159.98	0.00	0.0000	0.0000	0.0000	0.00
121	SEABED	-558.53	-42.67	0.00	657.60	0.572	0.000	159.98	0.00	0.0000	0.0000	0.0000	0.00
122	SEABED	-564.58	-42.67	0.00	663.65	0.572	0.000	159.98	0.00	0.0000	0.0000	0.0000	0.00

123	SEABED	-570.63	-42.67	0.00	669.70	0.572	0.000	159.98	0.00	0.0000	0.0000	0.0000	0.00
124	SEABED	-576.68	-42.67	0.00	675.75	0.572	0.000	159.98	0.00	0.0000	0.0000	0.0000	0.00
125	SEABED	-582.73	-42.67	0.00	681.80	0.572	0.000	159.98	0.00	0.0000	0.0000	0.0000	0.00
126	SEABED	-588.78	-42.67	0.00	687.85	0.572	0.000	159.98	0.00	0.0000	0.0000	0.0000	0.00
127	SEABED	-594.83	-42.67	0.00	693.90	0.572	0.000	159.98	0.00	0.0000	0.0000	0.0000	0.00
128	SEABED	-600.88	-42.67	0.00	699.95	0.572	0.000	159.98	0.00	0.0000	0.0000	0.0000	0.00
129	SEABED	-606.93	-42.67	0.00	706.00	0.572	0.000	159.98	0.00	0.0000	0.0000	0.0000	0.00
130	SEABED	-612.98	-42.67	0.00	712.05	0.572	0.000	159.98	0.00	0.0000	0.0000	0.0000	0.00
131	SEABED	-619.03	-42.67	0.00	718.10	0.571	0.000	159.98	0.00	0.0000	0.0000	0.0000	0.00
132	SEABED	-625.08	-42.67	0.00	724.15	0.568	0.000	159.98	0.00	0.0000	0.0000	0.0000	0.00
133	SEABED	-631.13	-42.67	0.00	730.20	0.425	0.000	159.98	0.00	0.0000	0.0000	0.0000	0.00
134	SEABED	-634.59	-42.67	-0.02	733.65	0.237	0.000	159.98	0.00	0.0000	0.0000	0.0000	0.00
135	SEABED	-638.04	-42.67	-0.08	737.11	0.000	0.000	159.98	0.00	0.0000	0.0000	0.0000	0.00

S T A T I C P I P E C O O R D I N A T E S, F O R C E S A N D S T R A I N S

NODE NO.	PIPE SECTION	X COORD (M)	Y COORD (M)	VERT ANGLE (DEG)	PIPE LENGTH (M)	SUPPORT REACTION (KN)	SEPARA -TION (M)	AXIAL TENSION (KN)	BENDING MOMENT (KN-M)	TENSILE STRAIN (PCT)	BENDING STRAIN (PCT)	TOTAL STRAIN (PCT)	PERCNT ALLOW (PCT)
1	LAYBARGE	96.31	6.41	1.93	0.00	9.928	0.000	0.00	2.74	0.0000	0.0021	0.0021	0.00
3	LAYBARGE	84.28	6.05	1.58	12.04	24.174	0.000	-0.73	-19.24	0.0000	-0.0144	0.0144	0.00
5	LAYBARGE	73.45	5.73	1.90	22.87	24.301	0.000	-1.39	-29.26	-0.0001	-0.0219	0.0219	0.00
7	TENSIONR	60.10	5.24	2.31	36.23	32.337	0.000	177.52	-23.76	0.0083	-0.0178	0.0260	0.00
9	LAYBARGE	51.10	4.87	2.20	45.24	0.000	0.000	176.79	30.86	0.0082	0.0231	0.0313	0.00
10	LAYBARGE	46.45	4.70	1.90	49.89	8.006	0.000	176.47	15.26	0.0082	0.0114	0.0196	0.00
12	LAYBARGE	35.36	4.31	2.69	60.99	39.121	0.000	175.41	-85.65	0.0082	-0.0641	0.0722	0.00
14	LAYBARGE	25.34	3.64	4.97	71.03	29.483	0.000	174.09	-99.03	0.0081	-0.0741	0.0822	0.00
16	LAYBARGE	19.31	3.05	6.10	77.09	0.000	0.000	173.10	-53.90	0.0081	-0.0403	0.0484	0.00
17	LAYBARGE	8.88	1.76	8.60	87.60	58.948	0.000	169.83	-165.20	0.0079	-0.1242	0.1321	0.00
19	LAYBARGE	4.90	1.10	9.90	91.63	0.000	0.000	169.12	-78.20	0.0079	-0.0585	0.0664	0.00
20	LAYBARGE	3.08	0.78	10.19	93.48	0.000	0.161	168.56	-45.65	0.0078	-0.0341	0.0420	0.00
24	STINGER	-7.61	-1.15	9.93	104.35	0.000	0.135	165.86	38.19	0.0077	0.0286	0.0363	0.00
26	STINGER	-16.63	-2.66	9.15	113.49	4.619	0.000	164.37	18.75	0.0076	0.0140	0.0217	0.00
29	STINGER	-26.29	-4.20	9.16	123.27	21.149	0.000	162.82	-34.98	0.0075	-0.0262	0.0337	0.00
31	STINGER	-37.08	-5.96	9.14	134.20	0.000	0.044	161.08	16.95	0.0073	0.0127	0.0202	0.00
33	STINGER	-40.04	-6.43	9.02	137.20	0.000	0.517	160.61	12.30	0.0073	0.0092	0.0167	0.00
35	SAGBEND	-42.91	-6.89	8.97	140.11	0.000	0.000	160.16	0.00	0.0073	0.0000	0.0074	0.00
36	SAGBEND	-46.13	-7.28	6.96	143.36	0.000	0.000	160.26	0.00	0.0000	0.0000	0.0000	0.00
37	SAGBEND	-52.14	-8.01	6.96	149.40	0.000	0.000	160.26	0.00	0.0000	0.0000	0.0000	0.00
38	SAGBEND	-58.14	-8.75	6.95	155.45	0.000	0.000	160.25	0.00	0.0000	0.0000	0.0000	0.00
39	SAGBEND	-64.15	-9.48	6.94	161.50	0.000	0.000	160.25	0.00	0.0000	0.0000	0.0000	0.00
40	SAGBEND	-70.15	-10.21	6.94	167.55	0.000	0.000	160.25	0.00	0.0000	0.0000	0.0000	0.00
41	SAGBEND	-76.16	-10.94	6.93	173.60	0.000	0.000	160.25	0.00	0.0000	0.0000	0.0000	0.00
42	SAGBEND	-82.17	-11.67	6.93	179.65	0.000	0.000	160.25	0.00	0.0000	0.0000	0.0000	0.00
43	SAGBEND	-88.17	-12.40	6.92	185.70	0.000	0.000	160.24	0.00	0.0000	0.0000	0.0000	0.00
44	SAGBEND	-94.18	-13.13	6.92	191.75	0.000	0.000	160.24	0.00	0.0000	0.0000	0.0000	0.00
45	SAGBEND	-100.18	-13.86	6.91	197.80	0.000	0.000	160.24	0.00	0.0000	0.0000	0.0000	0.00
46	SAGBEND	-106.19	-14.58	6.91	203.85	0.000	0.000	160.24	0.00	0.0000	0.0000	0.0000	0.00
47	SAGBEND	-112.20	-15.31	6.90	209.90	0.000	0.000	160.24	0.00	0.0000	0.0000	0.0000	0.00
48	SAGBEND	-118.20	-16.04	6.89	215.95	0.000	0.000	160.23	0.00	0.0000	0.0000	0.0000	0.00
49	SAGBEND	-124.21	-16.76	6.89	222.00	0.000	0.000	160.23	0.00	0.0000	0.0000	0.0000	0.00
50	SAGBEND	-130.21	-17.49	6.88	228.05	0.000	0.000	160.23	0.00	0.0000	0.0000	0.0000	0.00
51	SAGBEND	-136.22	-18.21	6.88	234.10	0.000	0.000	160.23	0.00	0.0000	0.0000	0.0000	0.00
52	SAGBEND	-142.23	-18.94	6.87	240.15	0.000	0.000	160.23	0.00	0.0000	0.0000	0.0000	0.00
53	SAGBEND	-148.23	-19.66	6.87	246.20	0.000	0.000	160.22	0.00	0.0000	0.0000	0.0000	0.00
54	SAGBEND	-154.24	-20.39	6.86	252.25	0.000	0.000	160.22	0.00	0.0000	0.0000	0.0000	0.00
55	SAGBEND	-160.25	-21.11	6.85	258.30	0.000	0.000	160.22	0.00	0.0000	0.0000	0.0000	0.00
56	SAGBEND	-166.25	-21.83	6.85	264.35	0.000	0.000	160.22	0.00	0.0000	0.0000	0.0000	0.00
57	SAGBEND	-172.26	-22.55	6.84	270.40	0.000	0.000	160.22	0.00	0.0000	0.0000	0.0000	0.00
58	SAGBEND	-178.27	-23.27	6.84	276.45	0.000	0.000	160.22	0.00	0.0000	0.0000	0.0000	0.00
59	SAGBEND	-184.27	-23.99	6.83	282.50	0.000	0.000	160.21	0.00	0.0000	0.0000	0.0000	0.00
60	SAGBEND	-190.28	-24.71	6.83	288.55	0.000	0.000	160.21	0.00	0.0000	0.0000	0.0000	0.00

S T A T I C P I P E C O O R D I N A T E S, F O R C E S A N D S T R A I N S

NODE NO.	PIPE SECTION	X COORD (M)	Y COORD (M)	VERT ANGLE (DEG)	PIPE LENGTH (M)	SUPPORT REACTION (KN)	SEPARA -TION (M)	AXIAL TENSION (KN)	BENDING MOMENT (KN-M)	TENSILE STRAIN (PCT)	BENDING STRAIN (PCT)	TOTAL STRAIN (PCT)	PERCNT ALLOW (PCT)
61	SAGBEND	-196.29	-25.43	6.82	294.60	0.000	0.000	160.21	0.00	0.0000	0.0000	0.0000	0.00
62	SAGBEND	-202.30	-26.15	6.82	300.65	0.000	0.000	160.21	0.00	0.0000	0.0000	0.0000	0.00
63	SAGBEND	-208.30	-26.87	6.81	306.70	0.000	0.000	160.21	0.00	0.0000	0.0000	0.0000	0.00
64	SAGBEND	-214.31	-27.58	6.80	312.75	0.000	0.000	160.20	0.00	0.0000	0.0000	0.0000	0.00
65	SAGBEND	-220.32	-28.30	6.80	318.80	0.000	0.000	160.20	0.00	0.0000	0.0000	0.0000	0.00
66	SAGBEND	-226.32	-29.01	6.79	324.85	0.000	0.000	160.20	0.00	0.0000	0.0000	0.0000	0.00
67	SAGBEND	-232.33	-29.73	6.79	330.90	0.000	0.000	160.20	0.00	0.0000	0.0000	0.0000	0.00
68	SAGBEND	-238.34	-30.44	6.78	336.95	0.000	0.000	160.20	0.00	0.0000	0.0000	0.0000	0.00
69	SAGBEND	-241.48	-30.82	6.78	340.11	0.000	0.000	160.20	0.00	0.0000	0.0000	0.0000	0.00
70	SAGBEND	-245.92	-31.34	6.63	344.58	0.000	0.000	160.15	0.00	0.0000	0.0000	0.0000	0.00
71	SAGBEND	-250.36	-31.85	6.48	349.05	0.000	0.000	160.10	0.00	0.0000	0.0000	0.0000	0.00
72	SAGBEND	-256.37	-32.52	6.28	355.10	0.000	0.000	160.03	0.00	0.0000	0.0000	0.0000	0.00
73	SAGBEND	-262.39	-33.17	6.07	361.15	0.000	0.000	159.97	0.00	0.0000	0.0000	0.0000	0.00
74	SAGBEND	-268.40	-33.80	5.87	367.20	0.000	0.000	159.91	0.00	0.0000	0.0000	0.0000	0.00
75	SAGBEND	-274.42	-34.41	5.66	373.25	0.000	0.000	159.86	0.00	0.0000	0.0000	0.0000	0.00
76	SAGBEND	-280.44	-35.00	5.46	379.30	0.000	0.000	159.80	0.00	0.0000	0.0000	0.0000	0.00
77	SAGBEND	-286.47	-35.56	5.26	385.35	0.000	0.000	159.75	0.00	0.0000	0.0000	0.0000	0.00
78	SAGBEND	-292.49	-36.10	5.05	391.40	0.000	0.000	159.70	0.00	0.0000	0.0000	0.0000	0.00
79	SAGBEND	-298.52	-36.63	4.85	397.45	0.000	0.000	159.65	0.00	0.0000	0.0000	0.0000	0.00
80	SAGBEND	-304.55	-37.13	4.64	403.50	0.000	0.000	159.60	0.00	0.0000	0.0000	0.0000	0.00
81	SAGBEND	-310.58	-37.61	4.44	409.55	0.000	0.000	159.55	0.00	0.0000	0.0000	0.0000	0.00
82	SAGBEND	-316.61	-38.06	4.23	415.60	0.000	0.000	159.51	0.00	0.0000	0.0000	0.0000	0.00
83	SAGBEND	-322.65	-38.50	4.03	421.65	0.000	0.000	159.47	0.00	0.0000	0.0000	0.0000	0.00
84	SAGBEND	-328.68	-38.91	3.82	427.70	0.000	0.000	159.43	0.00	0.0000	0.0000	0.0000	0.00
85	SAGBEND	-334.72	-39.31	3.62	433.75	0.000	0.000	159.39	0.00	0.0000	0.0000	0.0000	0.00
86	SAGBEND	-340.76	-39.68	3.41	439.80	0.000	0.000	159.36	0.00	0.0000	0.0000	0.0000	0.00
87	SAGBEND	-346.80	-40.03	3.21	445.85	0.000	0.000	159.33	0.00	0.0000	0.0000	0.0000	0.00
88	SAGBEND	-352.84	-40.35	3.00	451.90	0.000	0.000	159.29	0.00	0.0000	0.0000	0.0000	0.00
89	SAGBEND	-358.88	-40.66	2.80	457.95	0.000	0.000	159.27	0.00	0.0000	0.0000	0.0000	0.00
90	SAGBEND	-364.92	-40.95	2.59	464.00	0.000	0.000	159.24	0.00	0.0000	0.0000	0.0000	0.00
91	SAGBEND	-370.97	-41.21	2.39	470.05	0.000	0.000	159.21	0.00	0.0000	0.0000	0.0000	0.00
92	SAGBEND	-377.01	-41.45	2.18	476.10	0.000	0.000	159.19	0.00	0.0000	0.0000	0.0000	0.00
93	SAGBEND	-383.06	-41.67	1.98	482.15	0.000	0.000	159.17	0.00	0.0000	0.0000	0.0000	0.00
94	SAGBEND	-389.11	-41.87	1.77	488.20	0.000	0.000	159.15	0.00	0.0000	0.0000	0.0000	0.00
95	SAGBEND	-395.15	-42.04	1.57	494.25	0.000	0.000	159.14	0.00	0.0000	0.0000	0.0000	0.00
96	SAGBEND	-401.20	-42.20	1.36	500.30	0.000	0.000	159.12	0.00	0.0000	0.0000	0.0000	0.00
97	SAGBEND	-407.25	-42.33	1.15	506.35	0.000	0.000	159.11	0.00	0.0000	0.0000	0.0000	0.00
98	SAGBEND	-413.30	-42.44	0.95	512.40	0.000	0.000	159.10	0.00	0.0000	0.0000	0.0000	0.00
99	SAGBEND	-419.35	-42.53	0.74	518.45	0.000	0.000	159.09	0.00	0.0000	0.0000	0.0000	0.00
100	SAGBEND	-425.40	-42.60	0.54	524.50	0.000	0.000	159.08	0.00	0.0000	0.0000	0.0000	0.00
101	SAGBEND	-431.45	-42.64	0.33	530.55	0.000	0.000	159.08	0.00	0.0000	0.0000	0.0000	0.00
102	SAGBEND	-437.50	-42.67	0.12	536.60	0.066	0.000	159.08	0.00	0.0000	0.0000	0.0000	0.00
103	SEABED	-443.55	-42.67	0.01	542.65	0.455	0.000	159.08	0.00	0.0000	0.0000	0.0000	0.00
104	SEABED	-449.60	-42.67	0.00	548.70	0.562	0.000	159.08	0.00	0.0000	0.0000	0.0000	0.00

S T A T I C P I P E C O O R D I N A T E S, F O R C E S A N D S T R A I N S

NODE NO.	PIPE SECTION	X COORD (M)	Y COORD (M)	VERT ANGLE (DEG)	PIPE LENGTH (M)	SUPPORT REACTION (KN)	SEPARA -TION (M)	AXIAL TENSION (KN)	BENDING MOMENT (KN-M)	TENSILE STRAIN (PCT)	BENDING STRAIN (PCT)	TOTAL STRAIN (PCT)	PERCNT ALLOW (PCT)
105	SEABED	-455.65	-42.67	0.00	554.75	0.571	0.000	159.08	0.00	0.0000	0.0000	0.0000	0.00
106	SEABED	-461.70	-42.67	0.00	560.80	0.571	0.000	159.08	0.00	0.0000	0.0000	0.0000	0.00
107	SEABED	-467.75	-42.67	0.00	566.85	0.572	0.000	159.08	0.00	0.0000	0.0000	0.0000	0.00
108	SEABED	-473.80	-42.67	0.00	572.90	0.572	0.000	159.08	0.00	0.0000	0.0000	0.0000	0.00
109	SEABED	-479.85	-42.67	0.00	578.95	0.572	0.000	159.08	0.00	0.0000	0.0000	0.0000	0.00
110	SEABED	-485.90	-42.67	0.00	585.00	0.572	0.000	159.08	0.00	0.0000	0.0000	0.0000	0.00
111	SEABED	-491.95	-42.67	0.00	591.05	0.572	0.000	159.08	0.00	0.0000	0.0000	0.0000	0.00
112	SEABED	-498.00	-42.67	0.00	597.10	0.572	0.000	159.08	0.00	0.0000	0.0000	0.0000	0.00
113	SEABED	-504.05	-42.67	0.00	603.15	0.572	0.000	159.08	0.00	0.0000	0.0000	0.0000	0.00
114	SEABED	-510.10	-42.67	0.00	609.20	0.572	0.000	159.08	0.00	0.0000	0.0000	0.0000	0.00
115	SEABED	-516.14	-42.67	0.00	615.25	0.572	0.000	159.08	0.00	0.0000	0.0000	0.0000	0.00
116	SEABED	-522.19	-42.67	0.00	621.30	0.572	0.000	159.08	0.00	0.0000	0.0000	0.0000	0.00
117	SEABED	-528.24	-42.67	0.00	627.35	0.572	0.000	159.08	0.00	0.0000	0.0000	0.0000	0.00
118	SEABED	-534.29	-42.67	0.00	633.40	0.572	0.000	159.08	0.00	0.0000	0.0000	0.0000	0.00
119	SEABED	-540.34	-42.67	0.00	639.45	0.572	0.000	159.08	0.00	0.0000	0.0000	0.0000	0.00
120	SEABED	-546.39	-42.67	0.00	645.50	0.572	0.000	159.08	0.00	0.0000	0.0000	0.0000	0.00
121	SEABED	-552.44	-42.67	0.00	651.55	0.572	0.000	159.08	0.00	0.0000	0.0000	0.0000	0.00
122	SEABED	-558.49	-42.67	0.00	657.60	0.572	0.000	159.08	0.00	0.0000	0.0000	0.0000	0.00
123	SEABED	-564.54	-42.67	0.00	663.65	0.572	0.000	159.08	0.00	0.0000	0.0000	0.0000	0.00
124	SEABED	-570.59	-42.67	0.00	669.70	0.572	0.000	159.08	0.00	0.0000	0.0000	0.0000	0.00
125	SEABED	-576.64	-42.67	0.00	675.75	0.572	0.000	159.08	0.00	0.0000	0.0000	0.0000	0.00
126	SEABED	-582.69	-42.67	0.00	681.80	0.572	0.000	159.08	0.00	0.0000	0.0000	0.0000	0.00
127	SEABED	-588.74	-42.67	0.00	687.85	0.572	0.000	159.08	0.00	0.0000	0.0000	0.0000	0.00
128	SEABED	-594.79	-42.67	0.00	693.90	0.572	0.000	159.08	0.00	0.0000	0.0000	0.0000	0.00
129	SEABED	-600.84	-42.67	0.00	699.95	0.572	0.000	159.08	0.00	0.0000	0.0000	0.0000	0.00
130	SEABED	-606.89	-42.67	0.00	706.00	0.572	0.000	159.08	0.00	0.0000	0.0000	0.0000	0.00
131	SEABED	-612.94	-42.67	0.00	712.05	0.572	0.000	159.08	0.00	0.0000	0.0000	0.0000	0.00

132	SEABED	-618.99	-42.67	0.00	718.10	0.571	0.000	159.08	0.00	0.0000	0.0000	0.0000	0.00
133	SEABED	-625.04	-42.67	0.00	724.15	0.570	0.000	159.08	0.00	0.0000	0.0000	0.0000	0.00
134	SEABED	-631.09	-42.67	0.00	730.20	0.558	0.000	159.08	0.00	0.0000	0.0000	0.0000	0.00
135	SEABED	-637.14	-42.67	-0.02	736.25	0.375	0.000	159.08	0.00	0.0000	0.0000	0.0000	0.00
136	SEABED	-641.00	-42.67	-0.08	740.10	0.000	0.000	159.08	0.00	0.0000	0.0000	0.0000	0.00

S T A T I C P I P E C O O R D I N A T E S, F O R C E S A N D S T R A I N S

NODE NO.	PIPE SECTION	X COORD (M)	Y COORD (M)	VERT ANGLE (DEG)	PIPE LENGTH (M)	SUPPORT REACTION (KN)	SEPARA -TION (M)	AXIAL TENSION (KN)	BENDING MOMENT (KN-M)	TENSILE STRAIN (PCT)	BENDING STRAIN (PCT)	TOTAL STRAIN (PCT)	PERCNT ALLOW (PCT)
1	LAYBARGE	96.31	6.41	1.93	0.00	9.929	0.000	0.00	2.74	0.0000	0.0021	0.0021	0.00
3	LAYBARGE	84.28	6.05	1.58	12.04	24.164	0.000	-0.73	-19.23	0.0000	-0.0144	0.0144	0.00
5	LAYBARGE	73.45	5.73	1.90	22.87	24.335	0.000	-1.39	-29.33	-0.0001	-0.0219	0.0220	0.00
7	TENSIONR	60.10	5.24	2.31	36.23	32.277	0.000	210.12	-23.55	0.0098	-0.0176	0.0274	0.00
9	LAYBARGE	51.10	4.87	2.20	45.24	0.000	0.000	209.39	30.31	0.0097	0.0227	0.0324	0.00
10	LAYBARGE	46.45	4.70	1.90	49.89	7.934	0.000	209.07	15.15	0.0097	0.0113	0.0211	0.00
12	LAYBARGE	35.36	4.31	2.68	60.99	39.307	0.000	208.01	-84.93	0.0097	-0.0635	0.0732	0.00
14	LAYBARGE	25.34	3.64	5.01	71.03	33.336	0.000	206.66	-105.46	0.0096	-0.0789	0.0885	0.00
16	LAYBARGE	19.31	3.04	6.17	77.09	0.000	0.000	205.69	-50.54	0.0096	-0.0378	0.0474	0.00
17	LAYBARGE	8.88	1.76	8.38	87.60	56.956	0.000	202.57	-148.03	0.0094	-0.1108	0.1202	0.00
19	LAYBARGE	4.90	1.12	9.52	91.63	0.000	0.000	201.81	-64.47	0.0094	-0.0482	0.0576	0.00
20	LAYBARGE	3.08	0.81	9.74	93.48	0.000	0.196	201.25	-33.81	0.0094	-0.0253	0.0346	0.00
24	STINGER	-7.58	-1.01	9.30	104.29	0.000	0.184	198.60	40.52	0.0092	0.0303	0.0395	0.00
26	STINGER	-16.61	-2.41	8.51	113.43	4.879	0.000	197.22	17.89	0.0091	0.0134	0.0225	0.00
29	STINGER	-26.29	-3.85	8.52	123.22	21.108	0.000	195.77	-34.59	0.0090	-0.0259	0.0350	0.00
31	STINGER	-37.11	-5.49	8.50	134.16	0.000	0.102	194.15	16.82	0.0089	0.0126	0.0216	0.00
33	STINGER	-40.11	-5.93	8.38	137.19	0.000	0.590	193.71	12.20	0.0088	0.0091	0.0181	0.00
35	SAGBEND	-43.00	-6.36	8.33	140.11	0.000	0.000	193.29	0.00	0.0088	0.0000	0.0090	0.00
36	SAGBEND	-46.22	-6.73	6.68	143.35	0.000	0.000	193.37	0.00	0.0000	0.0000	0.0000	0.00
37	SAGBEND	-52.23	-7.44	6.68	149.40	0.000	0.000	193.37	0.00	0.0000	0.0000	0.0000	0.00
38	SAGBEND	-58.24	-8.14	6.68	155.45	0.000	0.000	193.37	0.00	0.0000	0.0000	0.0000	0.00
39	SAGBEND	-64.25	-8.84	6.67	161.50	0.000	0.000	193.37	0.00	0.0000	0.0000	0.0000	0.00
40	SAGBEND	-70.26	-9.55	6.67	167.55	0.000	0.000	193.36	0.00	0.0000	0.0000	0.0000	0.00
41	SAGBEND	-76.27	-10.25	6.66	173.60	0.000	0.000	193.36	0.00	0.0000	0.0000	0.0000	0.00
42	SAGBEND	-82.27	-10.95	6.66	179.65	0.000	0.000	193.36	0.00	0.0000	0.0000	0.0000	0.00
43	SAGBEND	-88.28	-11.65	6.65	185.70	0.000	0.000	193.36	0.00	0.0000	0.0000	0.0000	0.00
44	SAGBEND	-94.29	-12.35	6.65	191.75	0.000	0.000	193.36	0.00	0.0000	0.0000	0.0000	0.00
45	SAGBEND	-100.30	-13.05	6.64	197.80	0.000	0.000	193.35	0.00	0.0000	0.0000	0.0000	0.00
46	SAGBEND	-106.31	-13.75	6.64	203.85	0.000	0.000	193.35	0.00	0.0000	0.0000	0.0000	0.00
47	SAGBEND	-112.32	-14.45	6.63	209.90	0.000	0.000	193.35	0.00	0.0000	0.0000	0.0000	0.00
48	SAGBEND	-118.33	-15.15	6.63	215.95	0.000	0.000	193.35	0.00	0.0000	0.0000	0.0000	0.00
49	SAGBEND	-124.34	-15.85	6.62	222.00	0.000	0.000	193.35	0.00	0.0000	0.0000	0.0000	0.00
50	SAGBEND	-130.35	-16.55	6.62	228.05	0.000	0.000	193.35	0.00	0.0000	0.0000	0.0000	0.00
51	SAGBEND	-136.36	-17.24	6.61	234.10	0.000	0.000	193.34	0.00	0.0000	0.0000	0.0000	0.00
52	SAGBEND	-142.37	-17.94	6.61	240.15	0.000	0.000	193.34	0.00	0.0000	0.0000	0.0000	0.00
53	SAGBEND	-148.38	-18.64	6.61	246.20	0.000	0.000	193.34	0.00	0.0000	0.0000	0.0000	0.00
54	SAGBEND	-154.39	-19.33	6.60	252.25	0.000	0.000	193.34	0.00	0.0000	0.0000	0.0000	0.00
55	SAGBEND	-160.40	-20.03	6.60	258.30	0.000	0.000	193.34	0.00	0.0000	0.0000	0.0000	0.00
56	SAGBEND	-166.41	-20.72	6.59	264.35	0.000	0.000	193.33	0.00	0.0000	0.0000	0.0000	0.00
57	SAGBEND	-172.42	-21.42	6.59	270.40	0.000	0.000	193.33	0.00	0.0000	0.0000	0.0000	0.00
58	SAGBEND	-178.43	-22.11	6.58	276.45	0.000	0.000	193.33	0.00	0.0000	0.0000	0.0000	0.00
59	SAGBEND	-184.44	-22.80	6.58	282.50	0.000	0.000	193.33	0.00	0.0000	0.0000	0.0000	0.00
60	SAGBEND	-190.45	-23.50	6.57	288.55	0.000	0.000	193.33	0.00	0.0000	0.0000	0.0000	0.00

S T A T I C P I P E C O O R D I N A T E S, F O R C E S A N D S T R A I N S

NODE NO.	PIPE SECTION	X COORD (M)	Y COORD (M)	VERT ANGLE (DEG)	PIPE LENGTH (M)	SUPPORT REACTION (KN)	SEPARA -TION (M)	AXIAL TENSION (KN)	BENDING MOMENT (KN-M)	TENSILE STRAIN (PCT)	BENDING STRAIN (PCT)	TOTAL STRAIN (PCT)	PERCNT ALLOW (PCT)
61	SAGBEND	-196.46	-24.19	6.57	294.60	0.000	0.000	193.33	0.00	0.0000	0.0000	0.0000	0.00
62	SAGBEND	-202.47	-24.88	6.56	300.65	0.000	0.000	193.32	0.00	0.0000	0.0000	0.0000	0.00
63	SAGBEND	-208.48	-25.57	6.56	306.70	0.000	0.000	193.32	0.00	0.0000	0.0000	0.0000	0.00
64	SAGBEND	-214.49	-26.26	6.55	312.75	0.000	0.000	193.32	0.00	0.0000	0.0000	0.0000	0.00
65	SAGBEND	-220.50	-26.95	6.55	318.80	0.000	0.000	193.32	0.00	0.0000	0.0000	0.0000	0.00
66	SAGBEND	-226.51	-27.64	6.55	324.85	0.000	0.000	193.32	0.00	0.0000	0.0000	0.0000	0.00
67	SAGBEND	-232.52	-28.33	6.54	330.90	0.000	0.000	193.31	0.00	0.0000	0.0000	0.0000	0.00
68	SAGBEND	-238.53	-29.02	6.54	336.95	0.000	0.000	193.31	0.00	0.0000	0.0000	0.0000	0.00
69	SAGBEND	-241.67	-29.38	6.53	340.11	0.000	0.000	193.31	0.00	0.0000	0.0000	0.0000	0.00
70	SAGBEND	-246.11	-29.88	6.41	344.58	0.000	0.000	193.26	0.00	0.0000	0.0000	0.0000	0.00
71	SAGBEND	-250.56	-30.38	6.28	349.05	0.000	0.000	193.22	0.00	0.0000	0.0000	0.0000	0.00
72	SAGBEND	-256.57	-31.03	6.12	355.10	0.000	0.000	193.16	0.00	0.0000	0.0000	0.0000	0.00
73	SAGBEND	-262.59	-31.67	5.95	361.15	0.000	0.000	193.10	0.00	0.0000	0.0000	0.0000	0.00
74	SAGBEND	-268.61	-32.28	5.78	367.20	0.000	0.000	193.04	0.00	0.0000	0.0000	0.0000	0.00
75	SAGBEND	-274.63	-32.88	5.61	373.25	0.000	0.000	192.98	0.00	0.0000	0.0000	0.0000	0.00
76	SAGBEND	-280.65	-33.47	5.44	379.30	0.000	0.000	192.93	0.00	0.0000	0.0000	0.0000	0.00
77	SAGBEND	-286.67	-34.03	5.27	385.35	0.000	0.000	192.87	0.00	0.0000	0.0000	0.0000	0.00
78	SAGBEND	-292.70	-34.58	5.10	391.40	0.000	0.000	192.82	0.00	0.0000	0.0000	0.0000	0.00
79	SAGBEND	-298.72	-35.11	4.93	397.45	0.000	0.000	192.77	0.00	0.0000	0.0000	0.0000	0.00
80	SAGBEND	-304.75	-35.62	4.76	403.50	0.000	0.000	192.72	0.00	0.0000	0.0000	0.0000	0.00
81	SAGBEND	-310.78	-36.11	4.60	409.55	0.000	0.000	192.68	0.00	0.0000	0.0000	0.0000	0.00
82	SAGBEND	-316.81	-36.59	4.43	415.60	0.000	0.000	192.63	0.00	0.0000	0.0000	0.0000	0.00
83	SAGBEND	-322.84	-37.05	4.26	421.65	0.000	0.000	192.59	0.00	0.0000	0.0000	0.0000	0.00
84	SAGBEND	-328.88	-37.49	4.09	427.70	0.000	0.000	192.55	0.00	0.0000	0.0000	0.0000	0.00
85	SAGBEND	-334.91	-37.91	3.92	433.75	0.000	0.000	192.51	0.00	0.0000	0.0000	0.0000	0.00
86	SAGBEND	-340.95	-38.31	3.75	439.80	0.000	0.000	192.47	0.00	0.0000	0.0000	0.0000	0.00
87	SAGBEND	-346.99	-38.70	3.58	445.85	0.000	0.000	192.43	0.00	0.0000	0.0000	0.0000	0.00
88	SAGBEND	-353.03	-39.07	3.41	451.90	0.000	0.000	192.40	0.00	0.0000	0.0000	0.0000	0.00
89	SAGBEND	-359.07	-39.42	3.24	457.95	0.000	0.000	192.36	0.00	0.0000	0.0000	0.0000	0.00
90	SAGBEND	-365.11	-39.75	3.07	464.00	0.000	0.000	192.33	0.00	0.0000	0.0000	0.0000	0.00
91	SAGBEND	-371.15	-40.07	2.90	470.05	0.000	0.000	192.30	0.00	0.0000	0.0000	0.0000	0.00
92	SAGBEND	-377.19	-40.36	2.73	476.10	0.000	0.000	192.27	0.00	0.0000	0.0000	0.0000	0.00
93	SAGBEND	-383.23	-40.64	2.56	482.15	0.000	0.000	192.25	0.00	0.0000	0.0000	0.0000	0.00
94	SAGBEND	-389.28	-40.90	2.39	488.20	0.000	0.000	192.22	0.00	0.0000	0.0000	0.0000	0.00
95	SAGBEND	-395.32	-41.15	2.22	494.25	0.000	0.000	192.20	0.00	0.0000	0.0000	0.0000	0.00
96	SAGBEND	-401.37	-41.37	2.05	500.30	0.000	0.000	192.18	0.00	0.0000	0.0000	0.0000	0.00
97	SAGBEND	-407.42	-41.58	1.88	506.35	0.000	0.000	192.16	0.00	0.0000	0.0000	0.0000	0.00
98	SAGBEND	-413.46	-41.77	1.71	512.40	0.000	0.000	192.14	0.00	0.0000	0.0000	0.0000	0.00
99	SAGBEND	-419.51	-41.94	1.54	518.45	0.000	0.000	192.13	0.00	0.0000	0.0000	0.0000	0.00
100	SAGBEND	-425.56	-42.09	1.37	524.50	0.000	0.000	192.11	0.00	0.0000	0.0000	0.0000	0.00
101	SAGBEND	-431.61	-42.23	1.20	530.55	0.000	0.000	192.10	0.00	0.0000	0.0000	0.0000	0.00
102	SAGBEND	-437.66	-42.35	1.03	536.60	0.000	0.000	192.09	0.00	0.0000	0.0000	0.0000	0.00
103	SAGBEND	-443.70	-42.45	0.86	542.65	0.000	0.000	192.08	0.00	0.0000	0.0000	0.0000	0.00
104	SAGBEND	-449.75	-42.53	0.68	548.70	0.000	0.000	192.07	0.00	0.0000	0.0000	0.0000	0.00
105	SAGBEND	-455.80	-42.59	0.51	554.75	0.000	0.000	192.06	0.00	0.0000	0.0000	0.0000	0.00

S T A T I C P I P E C O O R D I N A T E S, F O R C E S A N D S T R A I N S

NODE NO.	PIPE SECTION	X COORD (M)	Y COORD (M)	VERT ANGLE (DEG)	PIPE LENGTH (M)	SUPPORT REACTION (KN)	SEPARA -TION (M)	AXIAL TENSION (KN)	BENDING MOMENT (KN-M)	TENSILE STRAIN (PCT)	BENDING STRAIN (PCT)	TOTAL STRAIN (PCT)	PERCNT ALLOW (PCT)
106	SAGBEND	-461.85	-42.64	0.34	560.80	0.000	0.000	192.06	0.00	0.0000	0.0000	0.0000	0.00
107	SAGBEND	-467.90	-42.66	0.18	566.85	0.007	0.000	192.06	-0.01	0.0000	0.0000	0.0000	0.00
108	SEABED	-473.95	-42.67	0.03	572.90	0.304	0.000	192.06	0.00	0.0000	0.0000	0.0000	0.00
109	SEABED	-480.00	-42.67	0.00	578.95	0.540	0.000	192.06	0.00	0.0000	0.0000	0.0000	0.00
110	SEABED	-486.05	-42.67	0.00	585.00	0.568	0.000	192.06	0.00	0.0000	0.0000	0.0000	0.00
111	SEABED	-492.10	-42.67	0.00	591.05	0.571	0.000	192.06	0.00	0.0000	0.0000	0.0000	0.00
112	SEABED	-498.15	-42.67	0.00	597.10	0.571	0.000	192.06	0.00	0.0000	0.0000	0.0000	0.00
113	SEABED	-504.20	-42.67	0.00	603.15	0.571	0.000	192.06	0.00	0.0000	0.0000	0.0000	0.00
114	SEABED	-510.25	-42.67	0.00	609.20	0.571	0.000	192.06	0.00	0.0000	0.0000	0.0000	0.00
115	SEABED	-516.30	-42.67	0.00	615.25	0.571	0.000	192.06	0.00	0.0000	0.0000	0.0000	0.00
116	SEABED	-522.35	-42.67	0.00	621.30	0.571	0.000	192.06	0.00	0.0000	0.0000	0.0000	0.00
117	SEABED	-528.40	-42.67	0.00	627.35	0.571	0.000	192.06	0.00	0.0000	0.0000	0.0000	0.00
118	SEABED	-534.45	-42.67	0.00	633.40	0.571	0.000	192.06	0.00	0.0000	0.0000	0.0000	0.00
119	SEABED	-540.50	-42.67	0.00	639.45	0.571	0.000	192.06	0.00	0.0000	0.0000	0.0000	0.00
120	SEABED	-546.55	-42.67	0.00	645.50	0.571	0.000	192.06	0.00	0.0000	0.0000	0.0000	0.00
121	SEABED	-552.60	-42.67	0.00	651.55	0.571	0.000	192.06	0.00	0.0000	0.0000	0.0000	0.00
122	SEABED	-558.65	-42.67	0.00	657.60	0.571	0.000	192.06	0.00	0.0000	0.0000	0.0000	0.00
123	SEABED	-564.70	-42.67	0.00	663.65	0.571	0.000	192.06	0.00	0.0000	0.0000	0.0000	0.00
124	SEABED	-570.75	-42.67	0.00	669.70	0.571	0.000	192.06	0.00	0.0000	0.0000	0.0000	0.00
125	SEABED	-576.80	-42.67	0.00	675.75	0.571	0.000	192.06	0.00	0.0000	0.0000	0.0000	0.00
126	SEABED	-582.85	-42.67	0.00	681.80	0.571	0.000	192.06	0.00	0.0000	0.0000	0.0000	0.00
127	SEABED	-588.90	-42.67	0.00	687.85	0.571	0.000	192.06	0.00	0.0000	0.0000	0.0000	0.00
128	SEABED	-594.95	-42.67	0.00	693.90	0.571	0.000	192.06	0.00	0.0000	0.0000	0.0000	0.00
129	SEABED	-601.00	-42.67	0.00	699.95	0.571	0.000	192.06	0.00	0.0000	0.0000	0.0000	0.00
130	SEABED	-607.05	-42.67	0.00	706.00	0.571	0.000	192.06	0.00	0.0000	0.0000	0.0000	0.00
131	SEABED	-613.10	-42.67	0.00	712.05	0.571	0.000	192.06	0.00	0.0000	0.0000	0.0000	0.00
132	SEABED	-619.15	-42.67	0.00	718.10	0.571	0.000	192.06	0.00	0.0000	0.0000	0.0000	0.00
133	SEABED	-625.20	-42.67	0.00	724.15	0.569	0.000	192.06	0.00	0.0000	0.0000	0.0000	0.00
134	SEABED	-631.25	-42.67	0.00	730.20	0.553	0.000	192.06	0.00	0.0000	0.0000	0.0000	0.00
135	SEABED	-637.30	-42.67	-0.02	736.25	0.362	0.000	192.06	0.00	0.0000	0.0000	0.0000	0.00
136	SEABED	-641.16	-42.67	-0.07	740.11	0.000	0.000	192.06	0.00	0.0000	0.0000	0.0000	0.00

PROJECT - 10 PL DYNAMIC START UP STRAIN AT BC PLATFORM HEADING 0 JOB NO. - FINAL PROJECT
USER ID - MZR LICENSED BY - PT Timas Suplindo CASE 15

S T A T I C P I P E C O O R D I N A T E S, F O R C E S A N D S T R A I N S

NODE NO.	PIPE SECTION	X COORD (M)	Y COORD (M)	VERT ANGLE (DEG)	PIPE LENGTH (M)	SUPPORT REACTION (KN)	SEPARA -TION (M)	AXIAL TENSION (KN)	BENDING MOMENT (KN-M)	TENSILE STRAIN (PCT)	BENDING STRAIN (PCT)	TOTAL STRAIN (PCT)	PERCNT ALLOW (PCT)
1	LAYBARGE	96.31	6.41	1.93	0.00	9.928	0.000	0.00	2.74	0.0000	0.0021	0.0021	0.00
3	LAYBARGE	84.28	6.05	1.58	12.04	24.173	0.000	-0.73	-19.24	0.0000	-0.0144	0.0144	0.00
5	LAYBARGE	73.45	5.73	1.90	22.87	24.305	0.000	-1.39	-29.27	-0.0001	-0.0219	0.0220	0.00
7	TENSIONR	60.10	5.24	2.31	36.23	32.378	0.000	210.12	-23.70	0.0098	-0.0177	0.0275	0.00
9	LAYBARGE	51.10	4.87	2.20	45.24	0.000	0.000	209.39	30.80	0.0097	0.0230	0.0328	0.00
10	LAYBARGE	46.45	4.70	1.90	49.89	7.381	0.000	209.07	15.96	0.0097	0.0119	0.0217	0.00
12	LAYBARGE	35.36	4.31	2.72	60.99	41.928	0.000	207.99	-87.18	0.0097	-0.0652	0.0749	0.00
14	LAYBARGE	25.34	3.64	4.89	71.03	26.365	0.000	206.74	-89.95	0.0096	-0.0673	0.0769	0.00
16	LAYBARGE	19.31	3.06	5.97	77.09	0.000	0.000	205.71	-58.05	0.0096	-0.0434	0.0530	0.00
17	LAYBARGE	8.88	1.76	9.04	87.60	69.572	0.000	202.03	-206.85	0.0094	-0.1945	0.2038	0.00
19	LAYBARGE	4.91	1.06	10.73	91.63	0.000	0.000	201.50	-108.83	0.0094	-0.0814	0.0908	0.00
20	LAYBARGE	3.10	0.71	11.15	93.48	0.000	0.087	200.95	-72.25	0.0093	-0.0540	0.0634	0.00
24	STINGER	-7.58	-1.47	11.42	104.38	0.000	0.037	198.16	25.47	0.0092	0.0190	0.0283	0.00
26	STINGER	-16.56	-3.23	10.83	113.52	5.258	0.000	196.41	14.59	0.0090	0.0109	0.0200	0.00
29	STINGER	-26.17	-5.05	10.75	123.30	19.797	0.000	194.59	-23.10	0.0089	-0.0173	0.0263	0.00
31	STINGER	-36.91	-7.07	10.26	134.23	0.449	0.000	192.54	41.73	0.0088	0.0312	0.0402	0.00
33	STINGER	-39.85	-7.59	9.92	137.22	0.000	0.480	192.01	46.07	0.0087	0.0345	0.0434	0.00
35	SAGBEND	-45.90	-8.61	9.23	143.35	0.000	0.000	191.01	38.32	0.0086	0.0287	0.0375	0.00
36	SAGBEND	-49.23	-9.15	8.95	146.73	0.000	0.000	190.50	23.68	0.0086	0.0177	0.0266	0.00
37	SAGBEND	-52.57	-9.67	8.84	150.11	0.000	0.000	189.99	0.00	0.0086	0.0000	0.0088	0.00
38	SAGBEND	-57.88	-10.25	6.26	155.46	0.000	0.000	190.18	0.00	0.0000	0.0000	0.0000	0.00
39	SAGBEND	-63.90	-10.91	6.26	161.51	0.000	0.000	190.18	0.00	0.0000	0.0000	0.0000	0.00
40	SAGBEND	-69.91	-11.57	6.25	167.56	0.000	0.000	190.17	0.00	0.0000	0.0000	0.0000	0.00
41	SAGBEND	-75.92	-12.23	6.25	173.61	0.000	0.000	190.17	0.00	0.0000	0.0000	0.0000	0.00
42	SAGBEND	-81.94	-12.89	6.24	179.66	0.000	0.000	190.17	0.00	0.0000	0.0000	0.0000	0.00
43	SAGBEND	-87.95	-13.54	6.24	185.71	0.000	0.000	190.17	0.00	0.0000	0.0000	0.0000	0.00
44	SAGBEND	-93.97	-14.20	6.24	191.76	0.000	0.000	190.17	0.00	0.0000	0.0000	0.0000	0.00
45	SAGBEND	-99.98	-14.86	6.23	197.80	0.000	0.000	190.17	0.00	0.0000	0.0000	0.0000	0.00
46	SAGBEND	-106.00	-15.52	6.23	203.85	0.000	0.000	190.16	0.00	0.0000	0.0000	0.0000	0.00
47	SAGBEND	-112.01	-16.17	6.22	209.90	0.000	0.000	190.16	0.00	0.0000	0.0000	0.0000	0.00
48	SAGBEND	-118.02	-16.83	6.22	215.95	0.000	0.000	190.16	0.00	0.0000	0.0000	0.0000	0.00
49	SAGBEND	-124.04	-17.48	6.21	222.00	0.000	0.000	190.16	0.00	0.0000	0.0000	0.0000	0.00
50	SAGBEND	-130.05	-18.14	6.21	228.05	0.000	0.000	190.16	0.00	0.0000	0.0000	0.0000	0.00
51	SAGBEND	-136.07	-18.79	6.20	234.10	0.000	0.000	190.16	0.00	0.0000	0.0000	0.0000	0.00
52	SAGBEND	-142.08	-19.44	6.20	240.15	0.000	0.000	190.15	0.00	0.0000	0.0000	0.0000	0.00
53	SAGBEND	-148.10	-20.10	6.19	246.20	0.000	0.000	190.15	0.00	0.0000	0.0000	0.0000	0.00
54	SAGBEND	-154.11	-20.75	6.19	252.25	0.000	0.000	190.15	0.00	0.0000	0.0000	0.0000	0.00
55	SAGBEND	-160.13	-21.40	6.18	258.30	0.000	0.000	190.15	0.00	0.0000	0.0000	0.0000	0.00
56	SAGBEND	-166.14	-22.05	6.18	264.35	0.000	0.000	190.15	0.00	0.0000	0.0000	0.0000	0.00
57	SAGBEND	-172.16	-22.70	6.17	270.40	0.000	0.000	190.15	0.00	0.0000	0.0000	0.0000	0.00
58	SAGBEND	-178.17	-23.35	6.17	276.45	0.000	0.000	190.14	0.00	0.0000	0.0000	0.0000	0.00
59	SAGBEND	-184.19	-24.00	6.16	282.50	0.000	0.000	190.14	0.00	0.0000	0.0000	0.0000	0.00
60	SAGBEND	-190.20	-24.65	6.16	288.55	0.000	0.000	190.14	0.00	0.0000	0.0000	0.0000	0.00

OFFPIPE-3 OFFSHORE PIPELINE ANALYSIS SYSTEM - VERSION NO. - 3.02EX DATE - 2/23/2019 TIME - 10:24:42 PAGE 221
PROJECT - 10 PL DYNAMIC START UP STRAIN AT BC PLATFORM HEADING 0 JOB NO. - FINAL PROJECT
USER ID - MZR LICENSED BY - PT Timas Suplindo CASE 15

S T A T I C P I P E C O O R D I N A T E S, F O R C E S A N D S T R A I N S

NODE NO.	PIPE SECTION	X COORD (M)	Y COORD (M)	VERT ANGLE (DEG)	PIPE LENGTH (M)	SUPPORT REACTION (KN)	SEPARA -TION (M)	AXIAL TENSION (KN)	BENDING MOMENT (KN-M)	TENSILE STRAIN (PCT)	BENDING STRAIN (PCT)	TOTAL STRAIN (PCT)	PERCNT ALLOW (PCT)
61	SAGBEND	-196.22	-25.30	6.15	294.60	0.000	0.000	190.14	0.00	0.0000	0.0000	0.0000	0.00
62	SAGBEND	-202.23	-25.95	6.15	300.65	0.000	0.000	190.14	0.00	0.0000	0.0000	0.0000	0.00
63	SAGBEND	-208.25	-26.60	6.15	306.70	0.000	0.000	190.14	0.00	0.0000	0.0000	0.0000	0.00
64	SAGBEND	-214.26	-27.24	6.14	312.75	0.000	0.000	190.13	0.00	0.0000	0.0000	0.0000	0.00
65	SAGBEND	-220.28	-27.89	6.14	318.80	0.000	0.000	190.13	0.00	0.0000	0.0000	0.0000	0.00
66	SAGBEND	-226.29	-28.54	6.13	324.85	0.000	0.000	190.13	0.00	0.0000	0.0000	0.0000	0.00
67	SAGBEND	-232.31	-29.18	6.13	330.90	0.000	0.000	190.13	0.00	0.0000	0.0000	0.0000	0.00
68	SAGBEND	-238.32	-29.83	6.12	336.95	0.000	0.000	190.13	0.00	0.0000	0.0000	0.0000	0.00
69	SAGBEND	-244.34	-30.47	6.12	343.00	0.000	0.000	190.12	0.00	0.0000	0.0000	0.0000	0.00
70	SAGBEND	-247.87	-30.85	6.11	346.56	0.000	0.000	190.12	0.00	0.0000	0.0000	0.0000	0.00
71	SAGBEND	-251.40	-31.23	6.11	350.11	0.000	0.000	190.12	0.00	0.0000	0.0000	0.0000	0.00
72	SAGBEND	-256.37	-31.76	5.97	355.10	0.000	0.000	190.07	0.00	0.0000	0.0000	0.0000	0.00
73	SAGBEND	-262.39	-32.38	5.80	361.15	0.000	0.000	190.01	0.00	0.0000	0.0000	0.0000	0.00
74	SAGBEND	-268.41	-32.98	5.63	367.20	0.000	0.000	189.96	0.00	0.0000	0.0000	0.0000	0.00
75	SAGBEND	-274.43	-33.56	5.46	373.25	0.000	0.000	189.90	0.00	0.0000	0.0000	0.0000	0.00
76	SAGBEND	-280.45	-34.13	5.28	379.30	0.000	0.000	189.85	0.00	0.0000	0.0000	0.0000	0.00
77	SAGBEND	-286.48	-34.68	5.11	385.35	0.000	0.000	189.80	0.00	0.0000	0.0000	0.0000	0.00
78	SAGBEND	-292.50	-35.21	4.94	391.40	0.000	0.000	189.75	0.00	0.0000	0.0000	0.0000	0.00
79	SAGBEND	-298.53	-35.72	4.77	397.45	0.000	0.000	189.70	0.00	0.0000	0.0000	0.0000	0.00
80	SAGBEND	-304.56	-36.21	4.60	403.50	0.000	0.000	189.65	0.00	0.0000	0.0000	0.0000	0.00
81	SAGBEND	-310.59	-36.69	4.42	409.55	0.000	0.000	189.61	0.00	0.0000	0.0000	0.0000	0.00
82	SAGBEND	-316.62	-37.15	4.25	415.60	0.000	0.000	189.56	0.00	0.0000	0.0000	0.0000	0.00
83	SAGBEND	-322.66	-37.59	4.08	421.65	0.000	0.000	189.52	0.00	0.0000	0.0000	0.0000	0.00
84	SAGBEND	-328.69	-38.01	3.91	427.70	0.000	0.000	189.48	0.00	0.0000	0.0000	0.0000	0.00
85	SAGBEND	-334.73	-38.41	3.74	433.75	0.000	0.000	189.44	0.00	0.0000	0.0000	0.0000	0.00
86	SAGBEND	-340.77	-38.80	3.56	439.80	0.000	0.000	189.41	0.00	0.0000	0.0000	0.0000	0.00
87	SAGBEND	-346.81	-39.16	3.39	445.85	0.000	0.000	189.37	0.00	0.0000	0.0000	0.0000	0.00
88	SAGBEND	-352.85	-39.51	3.22	451.90	0.000	0.000	189.34	0.00	0.0000	0.0000	0.0000	0.00
89	SAGBEND	-358.89	-39.84	3.04	457.95	0.000	0.000	189.31	0.00	0.0000	0.0000	0.0000	0.00
90	SAGBEND	-364.93	-40.15	2.87	464.00	0.000	0.000	189.28	0.00	0.0000	0.0000	0.0000	0.00
91	SAGBEND	-370.97	-40.45	2.70	470.05	0.000	0.000	189.25	0.00	0.0000	0.0000	0.0000	0.00
92	SAGBEND	-377.02	-40.72	2.53	476.10	0.000	0.000	189.23	0.00	0.0000	0.0000	0.0000	0.00
93	SAGBEND	-383.06	-40.98	2.35	482.15	0.000	0.000	189.20	0.00	0.0000	0.0000	0.0000	0.00
94	SAGBEND	-389.11	-41.22	2.18	488.20	0.000	0.000	189.18	0.00	0.0000	0.0000	0.0000	0.00
95	SAGBEND	-395.15	-41.44	2.01	494.25	0.000	0.000	189.16	0.00	0.0000	0.0000	0.0000	0.00
96	SAGBEND	-401.20	-41.64	1.83	500.30	0.000	0.000	189.14	0.00	0.0000	0.0000	0.0000	0.00
97	SAGBEND	-407.24	-41.83	1.66	506.35	0.000	0.000	189.12	0.00	0.0000	0.0000	0.0000	0.00
98	SAGBEND	-413.29	-42.00	1.49	512.40	0.000	0.000	189.11	0.00	0.0000	0.0000	0.0000	0.00
99	SAGBEND	-419.34	-42.14	1.32	518.45	0.000	0.000	189.09	0.00	0.0000	0.0000	0.0000	0.00
100	SAGBEND	-425.39	-42.27	1.14	524.50	0.000	0.000	189.08	0.00	0.0000	0.0000	0.0000	0.00
101	SAGBEND	-431.44	-42.39	0.97	530.55	0.000	0.000	189.07	0.00	0.0000	0.0000	0.0000	0.00
102	SAGBEND	-437.49	-42.48	0.80	536.60	0.000	0.000	189.06	0.00	0.0000	0.0000	0.0000	0.00
103	SAGBEND	-443.54	-42.55	0.62	542.65	0.000	0.000	189.05	0.00	0.0000	0.0000	0.0000	0.00
104	SAGBEND	-449.59	-42.61	0.45	548.70	0.000	0.000	189.05	0.00	0.0000	0.0000	0.0000	0.00
105	SAGBEND	-455.64	-42.65	0.28	554.75	0.000	0.000	189.04	0.00	0.0000	0.0000	0.0000	0.00

OFFPIPE-3 OFFSHORE PIPELINE ANALYSIS SYSTEM - VERSION NO. - 3.02EX DATE - 2/23/2019 TIME - 10:24:42 PAGE 222
PROJECT - 10 PL DYNAMIC START UP STRAIN AT BC PLATFORM HEADING 0 JOB NO. - FINAL PROJECT
USER ID - MZR LICENSED BY - PT Timas Suplindo CASE 15

S T A T I C P I P E C O O R D I N A T E S, F O R C E S A N D S T R A I N S

NODE NO.	PIPE SECTION	X COORD (M)	Y COORD (M)	VERT ANGLE (DEG)	PIPE LENGTH (M)	SUPPORT REACTION (KN)	SEPARA -TION (M)	AXIAL TENSION (KN)	BENDING MOMENT (KN-M)	TENSILE STRAIN (PCT)	BENDING STRAIN (PCT)	TOTAL STRAIN (PCT)	PERCNT ALLOW (PCT)
106	SAGBEND	-461.69	-42.67	0.10	560.80	0.074	0.000	189.04	0.00	0.0000	0.0000	0.0000	0.00
107	SEABED	-467.73	-42.67	0.01	566.85	0.454	0.000	189.04	0.00	0.0000	0.0000	0.0000	0.00
108	SEABED	-473.78	-42.67	0.00	572.90	0.560	0.000	189.04	0.00	0.0000	0.0000	0.0000	0.00
109	SEABED	-479.83	-42.67	0.00	578.95	0.570	0.000	189.04	0.00	0.0000	0.0000	0.0000	0.00
110	SEABED	-485.88	-42.67	0.00	585.00	0.571	0.000	189.04	0.00	0.0000	0.0000	0.0000	0.00
111	SEABED	-491.93	-42.67	0.00	591.05	0.571	0.000	189.04	0.00	0.0000	0.0000	0.0000	0.00
112	SEABED	-497.98	-42.67	0.00	597.10	0.571	0.000	189.04	0.00	0.0000	0.0000	0.0000	0.00
113	SEABED	-504.03	-42.67	0.00	603.15	0.571	0.000	189.04	0.00	0.0000	0.0000	0.0000	0.00
114	SEABED	-510.08	-42.67	0.00	609.20	0.571	0.000	189.04	0.00	0.0000	0.0000	0.0000	0.00
115	SEABED	-516.13	-42.67	0.00	615.25	0.571	0.000	189.04	0.00	0.0000	0.0000	0.0000	0.00
116	SEABED	-522.18	-42.67	0.00	621.30	0.571	0.000	189.04	0.00	0.0000	0.0000	0.0000	0.00
117	SEABED	-528.23	-42.67	0.00	627.35	0.571	0.000	189.04	0.00	0.0000	0.0000	0.0000	0.00
118	SEABED	-534.28	-42.67	0.00	633.40	0.571	0.000	189.04	0.00	0.0000	0.0000	0.0000	0.00
119	SEABED	-540.33	-42.67	0.00	639.45	0.571	0.000	189.04	0.00	0.0000	0.0000	0.0000	0.00
120	SEABED	-546.38	-42.67	0.00	645.50	0.571	0.000	189.04	0.00	0.0000	0.0000	0.0000	0.00
121	SEABED	-552.43	-42.67	0.00	651.55	0.571	0.000	189.04	0.00	0.0000	0.0000	0.0000	0.00
122	SEABED	-558.48	-42.67	0.00	657.60	0.571	0.000	189.04	0.00	0.0000	0.0000	0.0000	0.00
123	SEABED	-564.53	-42.67	0.00	663.65	0.571	0.000	189.04	0.00	0.0000	0.0000	0.0000	0.00
124	SEABED	-570.58	-42.67	0.00	669.70	0.571	0.000	189.04	0.00	0.0000	0.0000	0.0000	0.00
125	SEABED	-576.63	-42.67	0.00	675.75	0.571	0.000	189.04	0.00	0.0000	0.0000	0.0000	0.00
126	SEABED	-582.68	-42.67	0.00	681.80	0.571	0.000	189.04	0.00	0.0000	0.0000	0.0000	0.00
127	SEABED	-588.73	-42.67	0.00	687.85	0.571	0.000	189.04	0.00	0.0000	0.0000	0.0000	0.00
128	SEABED	-594.78	-42.67	0.00	693.90	0.571	0.000	189.04	0.00	0.0000	0.0000	0.0000	0.00
129	SEABED	-600.83	-42.67	0.00	699.95	0.571	0.000	189.04	0.00	0.0000	0.0000	0.0000	0.00
130	SEABED	-606.88	-42.67	0.00	706.00	0.571	0.000	189.04	0.00	0.0000	0.0000	0.0000	0.00
131	SEABED	-612.93	-42.67	0.00	712.05	0.571	0.000	189.04	0.00	0.0000	0.0000	0.0000	0.00
132	SEABED	-618.98	-42.67	0.00	718.10	0.571	0.000	189.04	0.00	0.0000	0.0000	0.0000	0.00
133	SEABED	-625.03	-42.67	0.00	724.15	0.571	0.000	189.04	0.00	0.0000	0.0000	0.0000	0.00
134	SEABED	-631.08	-42.67	0.00	730.20	0.571	0.000	189.04	0.00	0.0000	0.0000	0.0000	0.00
135	SEABED	-637.13	-42.67	0.00	736.24	0.567	0.000	189.04	0.00	0.0000	0.0000	0.0000	0.00
136	SEABED	-643.18	-42.67	0.00	742.29	0.447	0.000	189.04	0.00	0.0000	0.0000	0.0000	0.00
137	SEABED	-647.09	-42.67	-0.02	746.20	0.272	0.000	189.04	0.00	0.0000	0.0000	0.0000	0.00
138	SEABED	-650.99	-42.67	-0.07	750.10	0.000	0.000	189.04	0.00	0.0000	0.0000	0.0000	0.00

OFFPIPE-3 OFFSHORE PIPELINE ANALYSIS SYSTEM - VERSION NO. - 3.02EX DATE - 2/23/2019 TIME - 10:24:42 PAGE 228
PROJECT - 10 PL DYNAMIC START UP STRAIN AT BC PLATFORM HEADING 0 JOB NO. - FINAL PROJECT
USER ID - MZR LICENSED BY - PT Timas Suplindo CASE 16

S T A T I C P I P E C O O R D I N A T E S, F O R C E S A N D S T R A I N S

NODE NO.	PIPE SECTION	X COORD (M)	Y COORD (M)	VERT ANGLE (DEG)	PIPE LENGTH (M)	SUPPORT REACTION (KN)	SEPARA -TION (M)	AXIAL TENSION (KN)	BENDING MOMENT (KN-M)	TENSILE STRAIN (PCT)	BENDING STRAIN (PCT)	TOTAL STRAIN (PCT)	PERCNT ALLOW (PCT)
1	LAYBARGE	96.31	6.41	1.93	0.00	9.936	0.000	0.00	2.74	0.0000	0.0021	0.0021	0.00
3	LAYBARGE	84.28	6.05	1.58	12.04	24.116	0.000	-0.73	-19.16	0.0000	-0.0143	0.0144	0.00
5	LAYBARGE	73.45	5.73	1.90	22.87	24.493	0.000	-1.39	-29.64	-0.0001	-0.0222	0.0222	0.00
7	TENSIONR	60.10	5.24	2.30	36.23	31.940	0.000	331.64	-22.59	0.0154	-0.0169	0.0323	0.00
9	LAYBARGE	51.10	4.87	2.21	45.24	0.000	0.000	330.91	27.71	0.0154	0.0207	0.0361	0.00
10	LAYBARGE	46.45	4.70	1.94	49.89	8.533	0.000	330.59	13.50	0.0154	0.0101	0.0255	0.00
12	LAYBARGE	35.36	4.31	2.59	60.99	35.638	0.000	329.57	-78.70	0.0153	-0.0589	0.0742	0.00
14	LAYBARGE	25.34	3.64	5.38	71.03	60.559	0.000	327.81	-155.45	0.0152	-0.1165	0.1317	0.00
16	LAYBARGE	19.32	2.98	6.77	77.09	0.000	0.000	327.13	-27.08	0.0152	-0.0203	0.0355	0.00
17	LAYBARGE	8.88	1.76	6.35	87.60	15.708	0.000	324.67	30.34	0.0151	0.0227	0.0378	0.00
19	LAYBARGE	4.87	1.33	5.87	91.63	0.000	0.000	323.73	63.52	0.0151	0.0475	0.0626	0.00
20	LAYBARGE	3.06	1.14	5.55	93.45	0.000	0.526	323.34	74.21	0.0150	0.0555	0.0705	0.00
24	STINGER	-7.48	0.33	3.22	104.02	0.000	0.641	321.67	83.37	0.0150	0.0624	0.0773	0.00
26	STINGER	-16.58	-0.05	1.86	113.13	0.000	0.053	321.10	18.86	0.0149	0.0141	0.0290	0.00
29	STINGER	-26.47	-0.44	3.45	123.03	55.262	0.000	320.04	-174.62	0.0149	-0.1325	0.1473	0.00
31	STINGER	-37.35	-1.41	6.24	133.96	17.593	0.000	319.64	-71.61	0.0148	-0.0536	0.0684	0.00
33	STINGER	-40.34	-1.75	6.64	136.96	0.000	0.379	319.39	-34.51	0.0148	-0.0258	0.0407	0.00
35	SAGBEND	-46.69	-2.50	6.83	143.35	0.000	0.000	318.66	3.55	0.0148	0.0027	0.0175	0.00
36	SAGBEND	-50.04	-2.90	6.77	146.73	0.000	0.000	318.26	6.94	0.0147	0.0052	0.0200	0.00
37	SAGBEND	-53.40	-3.30	6.74	150.11	0.000	0.000	317.87	0.00	0.0147	0.0000	0.0148	0.00
38	SAGBEND	-58.71	-3.86	6.08	155.46	0.000	0.000	317.89	0.00	0.0000	0.0000	0.0000	0.00
39	SAGBEND	-64.73	-4.50	6.07	161.51	0.000	0.000	317.88	0.00	0.0000	0.0000	0.0000	0.00
40	SAGBEND	-70.74	-5.14	6.07	167.56	0.000	0.000	317.88	0.00	0.0000	0.0000	0.0000	0.00
41	SAGBEND	-76.76	-5.78	6.07	173.61	0.000	0.000	317.88	0.00	0.0000	0.0000	0.0000	0.00
42	SAGBEND	-82.78	-6.42	6.06	179.66	0.000	0.000	317.88	0.00	0.0000	0.0000	0.0000	0.00
43	SAGBEND	-88.79	-7.06	6.06	185.71	0.000	0.000	317.88	0.00	0.0000	0.0000	0.0000	0.00
44	SAGBEND	-94.81	-7.70	6.06	191.76	0.000	0.000	317.88	0.00	0.0000	0.0000	0.0000	0.00
45	SAGBEND	-100.83	-8.34	6.06	197.81	0.000	0.000	317.87	0.00	0.0000	0.0000	0.0000	0.00
46	SAGBEND	-106.84	-8.98	6.05	203.86	0.000	0.000	317.87	0.00	0.0000	0.0000	0.0000	0.00
47	SAGBEND	-112.86	-9.62	6.05	209.91	0.000	0.000	317.87	0.00	0.0000	0.0000	0.0000	0.00
48	SAGBEND	-118.87	-10.25	6.05	215.96	0.000	0.000	317.87	0.00	0.0000	0.0000	0.0000	0.00
49	SAGBEND	-124.89	-10.89	6.04	222.01	0.000	0.000	317.87	0.00	0.0000	0.0000	0.0000	0.00
50	SAGBEND	-130.91	-11.53	6.04	228.06	0.000	0.000	317.87	0.00	0.0000	0.0000	0.0000	0.00
51	SAGBEND	-136.92	-12.16	6.04	234.11	0.000	0.000	317.86	0.00	0.0000	0.0000	0.0000	0.00
52	SAGBEND	-142.94	-12.80	6.04	240.16	0.000	0.000	317.86	0.00	0.0000	0.0000	0.0000	0.00
53	SAGBEND	-148.96	-13.44	6.03	246.21	0.000	0.000	317.86	0.00	0.0000	0.0000	0.0000	0.00
54	SAGBEND	-154.97	-14.07	6.03	252.26	0.000	0.000	317.86	0.00	0.0000	0.0000	0.0000	0.00
55	SAGBEND	-160.99	-14.71	6.03	258.31	0.000	0.000	317.86	0.00	0.0000	0.0000	0.0000	0.00
56	SAGBEND	-167.01	-15.34	6.02	264.36	0.000	0.000	317.86	0.00	0.0000	0.0000	0.0000	0.00
57	SAGBEND	-173.02	-15.98	6.02	270.41	0.000	0.000	317.85	0.00	0.0000	0.0000	0.0000	0.00
58	SAGBEND	-179.04	-16.61	6.02	276.46	0.000	0.000	317.85	0.00	0.0000	0.0000	0.0000	0.00
59	SAGBEND	-185.06	-17.25	6.02	282.51	0.000	0.000	317.85	0.00	0.0000	0.0000	0.0000	0.00
60	SAGBEND	-191.07	-17.88	6.01	288.56	0.000	0.000	317.85	0.00	0.0000	0.0000	0.0000	0.00

S T A T I C P I P E C O O R D I N A T E S, F O R C E S A N D S T R A I N S

NODE NO.	PIPE SECTION	X COORD (M)	Y COORD (M)	VERT ANGLE (DEG)	PIPE LENGTH (M)	SUPPORT REACTION (KN)	SEPARA -TION (M)	AXIAL TENSION (KN)	BENDING MOMENT (KN-M)	TENSILE STRAIN (PCT)	BENDING STRAIN (PCT)	TOTAL STRAIN (PCT)	PERCNT ALLOW (PCT)
61	SAGBEND	-197.09	-18.51	6.01	294.61	0.000	0.000	317.85	0.00	0.0000	0.0000	0.0000	0.00
62	SAGBEND	-203.11	-19.15	6.01	300.66	0.000	0.000	317.85	0.00	0.0000	0.0000	0.0000	0.00
63	SAGBEND	-209.12	-19.78	6.00	306.71	0.000	0.000	317.84	0.00	0.0000	0.0000	0.0000	0.00
64	SAGBEND	-215.14	-20.41	6.00	312.76	0.000	0.000	317.84	0.00	0.0000	0.0000	0.0000	0.00
65	SAGBEND	-221.16	-21.04	6.00	318.81	0.000	0.000	317.84	0.00	0.0000	0.0000	0.0000	0.00
66	SAGBEND	-227.18	-21.68	6.00	324.86	0.000	0.000	317.84	0.00	0.0000	0.0000	0.0000	0.00
67	SAGBEND	-233.19	-22.31	5.99	330.91	0.000	0.000	317.84	0.00	0.0000	0.0000	0.0000	0.00
68	SAGBEND	-239.21	-22.94	5.99	336.96	0.000	0.000	317.84	0.00	0.0000	0.0000	0.0000	0.00
69	SAGBEND	-245.23	-23.57	5.99	343.01	0.000	0.000	317.83	0.00	0.0000	0.0000	0.0000	0.00
70	SAGBEND	-248.76	-23.94	5.99	346.56	0.000	0.000	317.83	0.00	0.0000	0.0000	0.0000	0.00
71	SAGBEND	-252.30	-24.31	5.98	350.12	0.000	0.000	317.83	0.00	0.0000	0.0000	0.0000	0.00
72	SAGBEND	-257.26	-24.83	5.90	355.11	0.000	0.000	317.78	0.00	0.0000	0.0000	0.0000	0.00
73	SAGBEND	-263.28	-25.45	5.80	361.16	0.000	0.000	317.73	0.00	0.0000	0.0000	0.0000	0.00
74	SAGBEND	-269.30	-26.05	5.70	367.21	0.000	0.000	317.67	0.00	0.0000	0.0000	0.0000	0.00
75	SAGBEND	-275.32	-26.65	5.59	373.26	0.000	0.000	317.61	0.00	0.0000	0.0000	0.0000	0.00
76	SAGBEND	-281.34	-27.23	5.49	379.31	0.000	0.000	317.56	0.00	0.0000	0.0000	0.0000	0.00
77	SAGBEND	-287.37	-27.80	5.39	385.36	0.000	0.000	317.50	0.00	0.0000	0.0000	0.0000	0.00
78	SAGBEND	-293.39	-28.37	5.29	391.41	0.000	0.000	317.45	0.00	0.0000	0.0000	0.0000	0.00
79	SAGBEND	-299.41	-28.92	5.18	397.46	0.000	0.000	317.40	0.00	0.0000	0.0000	0.0000	0.00
80	SAGBEND	-305.44	-29.46	5.08	403.51	0.000	0.000	317.35	0.00	0.0000	0.0000	0.0000	0.00
81	SAGBEND	-311.47	-29.99	4.98	409.56	0.000	0.000	317.30	0.00	0.0000	0.0000	0.0000	0.00
82	SAGBEND	-317.50	-30.51	4.87	415.61	0.000	0.000	317.25	0.00	0.0000	0.0000	0.0000	0.00
83	SAGBEND	-323.52	-31.02	4.77	421.66	0.000	0.000	317.20	0.00	0.0000	0.0000	0.0000	0.00
84	SAGBEND	-329.55	-31.52	4.67	427.71	0.000	0.000	317.15	0.00	0.0000	0.0000	0.0000	0.00
85	SAGBEND	-335.58	-32.00	4.57	433.76	0.000	0.000	317.11	0.00	0.0000	0.0000	0.0000	0.00
86	SAGBEND	-341.62	-32.48	4.46	439.81	0.000	0.000	317.06	0.00	0.0000	0.0000	0.0000	0.00
87	SAGBEND	-347.65	-32.95	4.36	445.86	0.000	0.000	317.02	0.00	0.0000	0.0000	0.0000	0.00
88	SAGBEND	-353.68	-33.40	4.26	451.91	0.000	0.000	316.98	0.00	0.0000	0.0000	0.0000	0.00
89	SAGBEND	-359.72	-33.84	4.15	457.96	0.000	0.000	316.93	0.00	0.0000	0.0000	0.0000	0.00
90	SAGBEND	-365.75	-34.28	4.05	464.01	0.000	0.000	316.89	0.00	0.0000	0.0000	0.0000	0.00
91	SAGBEND	-371.79	-34.70	3.95	470.06	0.000	0.000	316.85	0.00	0.0000	0.0000	0.0000	0.00
92	SAGBEND	-377.82	-35.11	3.85	476.11	0.000	0.000	316.81	0.00	0.0000	0.0000	0.0000	0.00
93	SAGBEND	-383.86	-35.51	3.74	482.16	0.000	0.000	316.78	0.00	0.0000	0.0000	0.0000	0.00
94	SAGBEND	-389.90	-35.90	3.64	488.21	0.000	0.000	316.74	0.00	0.0000	0.0000	0.0000	0.00
95	SAGBEND	-395.93	-36.28	3.54	494.26	0.000	0.000	316.70	0.00	0.0000	0.0000	0.0000	0.00
96	SAGBEND	-401.97	-36.65	3.43	500.31	0.000	0.000	316.67	0.00	0.0000	0.0000	0.0000	0.00
97	SAGBEND	-408.01	-37.00	3.33	506.36	0.000	0.000	316.64	0.00	0.0000	0.0000	0.0000	0.00
98	SAGBEND	-414.05	-37.35	3.23	512.41	0.000	0.000	316.60	0.00	0.0000	0.0000	0.0000	0.00
99	SAGBEND	-420.09	-37.68	3.12	518.46	0.000	0.000	316.57	0.00	0.0000	0.0000	0.0000	0.00
100	SAGBEND	-426.14	-38.01	3.02	524.51	0.000	0.000	316.54	0.00	0.0000	0.0000	0.0000	0.00
101	SAGBEND	-432.18	-38.32	2.92	530.57	0.000	0.000	316.51	0.00	0.0000	0.0000	0.0000	0.00
102	SAGBEND	-438.22	-38.62	2.81	536.62	0.000	0.000	316.48	0.00	0.0000	0.0000	0.0000	0.00
103	SAGBEND	-444.26	-38.92	2.71	542.67	0.000	0.000	316.45	0.00	0.0000	0.0000	0.0000	0.00
104	SAGBEND	-450.31	-39.20	2.61	548.72	0.000	0.000	316.43	0.00	0.0000	0.0000	0.0000	0.00
105	SAGBEND	-456.35	-39.47	2.50	554.77	0.000	0.000	316.40	0.00	0.0000	0.0000	0.0000	0.00

S T A T I C P I P E C O O R D I N A T E S, F O R C E S A N D S T R A I N S

NODE NO.	PIPE SECTION	X COORD (M)	Y COORD (M)	VERT ANGLE (DEG)	PIPE LENGTH (M)	SUPPORT REACTION (KN)	SEPARA -TION (M)	AXIAL TENSION (KN)	BENDING MOMENT (KN-M)	TENSILE STRAIN (PCT)	BENDING STRAIN (PCT)	TOTAL STRAIN (PCT)	PERCNT ALLOW (PCT)
106	SAGBEND	-462.40	-39.73	2.40	560.82	0.000	0.000	316.38	0.00	0.0000	0.0000	0.0000	0.00
107	SAGBEND	-468.44	-39.97	2.30	566.87	0.000	0.000	316.35	0.00	0.0000	0.0000	0.0000	0.00
108	SAGBEND	-474.49	-40.21	2.20	572.92	0.000	0.000	316.33	0.00	0.0000	0.0000	0.0000	0.00
109	SAGBEND	-480.53	-40.44	2.09	578.97	0.000	0.000	316.31	0.00	0.0000	0.0000	0.0000	0.00
110	SAGBEND	-486.58	-40.65	1.99	585.02	0.000	0.000	316.29	0.00	0.0000	0.0000	0.0000	0.00
111	SAGBEND	-492.63	-40.86	1.89	591.07	0.000	0.000	316.27	0.00	0.0000	0.0000	0.0000	0.00
112	SAGBEND	-498.67	-41.05	1.78	597.12	0.000	0.000	316.25	0.00	0.0000	0.0000	0.0000	0.00
113	SAGBEND	-504.72	-41.23	1.68	603.17	0.000	0.000	316.24	0.00	0.0000	0.0000	0.0000	0.00
114	SAGBEND	-510.77	-41.41	1.58	609.22	0.000	0.000	316.22	0.00	0.0000	0.0000	0.0000	0.00
115	SAGBEND	-516.82	-41.57	1.47	615.27	0.000	0.000	316.20	0.00	0.0000	0.0000	0.0000	0.00
116	SAGBEND	-522.86	-41.72	1.37	621.32	0.000	0.000	316.19	0.00	0.0000	0.0000	0.0000	0.00
117	SAGBEND	-528.91	-41.86	1.26	627.37	0.000	0.000	316.18	0.00	0.0000	0.0000	0.0000	0.00
118	SAGBEND	-534.96	-41.98	1.16	633.42	0.000	0.000	316.17	0.00	0.0000	0.0000	0.0000	0.00
119	SAGBEND	-541.01	-42.10	1.06	639.47	0.000	0.000	316.15	0.00	0.0000	0.0000	0.0000	0.00
120	SAGBEND	-547.06	-42.21	0.95	645.52	0.000	0.000	316.14	0.00	0.0000	0.0000	0.0000	0.00
121	SAGBEND	-553.11	-42.30	0.85	651.57	0.000	0.000	316.14	0.00	0.0000	0.0000	0.0000	0.00
122	SAGBEND	-559.16	-42.39	0.75	657.62	0.000	0.000	316.13	0.00	0.0000	0.0000	0.0000	0.00
123	SAGBEND	-565.21	-42.46	0.64	663.67	0.000	0.000	316.12	0.00	0.0000	0.0000	0.0000	0.00
124	SAGBEND	-571.26	-42.52	0.54	669.72	0.000	0.000	316.11	0.00	0.0000	0.0000	0.0000	0.00
125	SAGBEND	-577.31	-42.57	0.44	675.77	0.000	0.000	316.11	0.00	0.0000	0.0000	0.0000	0.00
126	SAGBEND	-583.36	-42.61	0.33	681.82	0.000	0.000	316.11	0.00	0.0000	0.0000	0.0000	0.00
127	SAGBEND	-589.41	-42.64	0.23	687.87	0.000	0.000	316.10	0.00	0.0000	0.0000	0.0000	0.00
128	SAGBEND	-595.46	-42.66	0.13	693.92	0.002	0.000	316.10	0.00	0.0000	0.0000	0.0000	0.00
129	SEABED	-601.51	-42.67	0.03	699.97	0.232	0.000	316.10	0.00	0.0000	0.0000	0.0000	0.00
130	SEABED	-607.56	-42.67	0.01	706.02	0.506	0.000	316.10	0.00	0.0000	0.0000	0.0000	0.00
131	SEABED	-613.61	-42.67	0.00	712.07	0.560	0.000	316.10	0.00	0.0000	0.0000	0.0000	0.00
132	SEABED	-619.66	-42.67	0.00	718.12	0.569	0.000	316.10	0.00	0.0000	0.0000	0.0000	0.00
133	SEABED	-625.71	-42.67	0.00	724.17	0.570	0.000	316.10	0.00	0.0000	0.0000	0.0000	0.00
134	SEABED	-631.76	-42.67	0.00	730.22	0.569	0.000	316.10	0.00	0.0000	0.0000	0.0000	0.00
135	SEABED	-637.81	-42.67	0.00	736.27	0.559	0.000	316.10	0.00	0.0000	0.0000	0.0000	0.00
136	SEABED	-643.86	-42.67	-0.01	742.32	0.425	0.000	316.10	0.00	0.0000	0.0000	0.0000	0.00
137	SEABED	-647.76	-42.67	-0.02	746.22	0.241	0.000	316.10	0.00	0.0000	0.0000	0.0000	0.00
138	SEABED	-651.67	-42.67	-0.06	750.13	0.000	0.000	316.10	0.00	0.0000	0.0000	0.0000	0.00

S T A T I C P I P E C O O R D I N A T E S, F O R C E S A N D S T R A I N S

NODE NO.	PIPE SECTION	X COORD (M)	Y COORD (M)	VERT ANGLE (DEG)	PIPE LENGTH (M)	SUPPORT REACTION (KN)	SEPARA -TION (M)	AXIAL TENSION (KN)	BENDING MOMENT (KN-M)	TENSILE STRAIN (PCT)	BENDING STRAIN (PCT)	TOTAL STRAIN (PCT)	PERCNT ALLOW (PCT)
1	LAYBARGE	96.31	6.41	1.93	0.00	9.932	0.000	0.00	2.74	0.0000	0.0021	0.0021	0.00

3	LAYBARGE	84.28	6.05	1.58	12.04	24.144	0.000	-0.73	-19.20	0.0000	-0.0144	0.0144	0.00
5	LAYBARGE	73.45	5.73	1.90	22.87	24.399	0.000	-1.39	-29.45	-0.0001	-0.0220	0.0221	0.00
7	TENSIONR	60.10	5.24	2.30	36.23	32.259	0.000	331.62	-23.07	0.0154	-0.0173	0.0327	0.00
9	LAYBARGE	51.10	4.87	2.21	45.24	0.000	0.000	330.89	29.24	0.0154	0.0219	0.0373	0.00
10	LAYBARGE	46.45	4.70	1.91	49.89	6.629	0.000	330.58	16.22	0.0154	0.0121	0.0275	0.00
12	LAYBARGE	35.36	4.31	2.70	60.99	44.939	0.000	329.49	-86.45	0.0153	-0.0647	0.0800	0.00
14	LAYBARGE	25.34	3.64	4.95	71.03	34.475	0.000	328.19	-100.12	0.0153	-0.0749	0.0901	0.00
16	LAYBARGE	19.31	3.05	6.06	77.09	0.000	0.000	327.21	-52.27	0.0152	-0.0391	0.0543	0.00
17	LAYBARGE	8.88	1.76	8.82	87.60	73.846	0.000	323.63	-195.96	0.0151	-0.1615	0.1766	0.00
19	LAYBARGE	4.90	1.08	10.39	91.63	0.000	0.000	323.09	-99.62	0.0150	-0.0745	0.0895	0.00
20	LAYBARGE	3.09	0.74	10.78	93.48	0.000	0.118	322.53	-66.30	0.0150	-0.0496	0.0646	0.00
24	STINGER	-7.61	-1.38	11.32	104.39	0.000	0.121	319.77	-4.50	0.0148	-0.0034	0.0182	0.00
26	STINGER	-16.57	-3.21	12.06	113.53	22.002	0.000	317.81	-77.67	0.0147	-0.0581	0.0729	0.00
29	STINGER	-26.17	-5.42	14.00	123.38	27.531	0.000	315.47	-108.44	0.0145	-0.0811	0.0958	0.00
31	STINGER	-36.72	-8.27	16.09	134.31	25.863	0.000	312.74	-80.81	0.0143	-0.0604	0.0750	0.00
33	STINGER	-39.59	-9.11	16.53	137.30	0.000	0.386	312.02	-36.42	0.0143	-0.0272	0.0417	0.00
35	SAGBEND	-45.39	-10.84	16.63	143.35	0.000	0.000	310.31	17.55	0.0141	0.0131	0.0276	0.00
36	SAGBEND	-51.19	-12.55	16.13	149.40	0.000	0.000	308.57	44.28	0.0140	0.0331	0.0475	0.00
37	SAGBEND	-57.01	-14.20	15.33	155.45	0.000	0.000	306.90	57.70	0.0139	0.0432	0.0574	0.00
38	SAGBEND	-62.86	-15.75	14.37	161.50	0.000	0.000	305.33	64.59	0.0138	0.0483	0.0625	0.00
39	SAGBEND	-68.74	-17.20	13.34	167.55	0.000	0.000	303.87	68.24	0.0137	0.0510	0.0652	0.00
40	SAGBEND	-74.64	-18.54	12.26	173.60	0.000	0.000	302.53	70.19	0.0136	0.0525	0.0666	0.00
41	SAGBEND	-80.56	-19.77	11.17	179.65	0.000	0.000	301.30	71.16	0.0135	0.0532	0.0672	0.00
42	SAGBEND	-86.51	-20.88	10.06	185.70	0.000	0.000	300.18	71.35	0.0134	0.0534	0.0673	0.00
43	SAGBEND	-92.47	-21.88	8.96	191.75	0.000	0.000	299.19	70.57	0.0133	0.0528	0.0667	0.00
44	SAGBEND	-98.46	-22.76	7.88	197.80	0.000	0.000	298.31	68.20	0.0133	0.0510	0.0649	0.00
45	SAGBEND	-104.46	-23.54	6.86	203.85	0.000	0.000	297.55	62.81	0.0132	0.0470	0.0608	0.00
46	SAGBEND	-110.47	-24.21	5.96	209.90	0.000	0.000	296.91	51.50	0.0131	0.0385	0.0523	0.00
47	SAGBEND	-116.49	-24.81	5.32	215.95	0.000	0.000	296.36	28.41	0.0131	0.0213	0.0350	0.00
48	SAGBEND	-120.63	-25.18	5.16	220.11	0.000	0.000	296.00	0.00	0.0131	0.0000	0.0138	0.00
49	SAGBEND	-124.59	-25.42	3.49	224.08	0.000	0.000	296.12	0.00	0.0000	0.0000	0.0000	0.00
50	SAGBEND	-128.56	-25.67	3.49	228.05	0.000	0.000	296.12	0.00	0.0000	0.0000	0.0000	0.00
51	SAGBEND	-134.60	-26.03	3.48	234.10	0.000	0.000	296.12	0.00	0.0000	0.0000	0.0000	0.00
52	SAGBEND	-140.64	-26.40	3.48	240.15	0.000	0.000	296.12	0.00	0.0000	0.0000	0.0000	0.00
53	SAGBEND	-146.67	-26.77	3.48	246.20	0.000	0.000	296.12	0.00	0.0000	0.0000	0.0000	0.00
54	SAGBEND	-152.71	-27.14	3.47	252.25	0.000	0.000	296.12	0.00	0.0000	0.0000	0.0000	0.00
55	SAGBEND	-158.75	-27.50	3.47	258.30	0.000	0.000	296.12	0.00	0.0000	0.0000	0.0000	0.00
56	SAGBEND	-164.79	-27.87	3.47	264.35	0.000	0.000	296.12	0.00	0.0000	0.0000	0.0000	0.00
57	SAGBEND	-170.83	-28.23	3.46	270.40	0.000	0.000	296.11	0.00	0.0000	0.0000	0.0000	0.00
58	SAGBEND	-176.87	-28.60	3.46	276.45	0.000	0.000	296.11	0.00	0.0000	0.0000	0.0000	0.00
59	SAGBEND	-182.91	-28.96	3.46	282.50	0.000	0.000	296.11	0.00	0.0000	0.0000	0.0000	0.00
60	SAGBEND	-188.95	-29.33	3.46	288.55	0.000	0.000	296.11	0.00	0.0000	0.0000	0.0000	0.00

S T A T I C P I P E C O O R D I N A T E S, F O R C E S A N D S T R A I N S

NODE NO.	PIPE SECTION	X COORD (M)	Y COORD (M)	VERT ANGLE (DEG)	PIPE LENGTH (M)	SUPPORT REACTION (KN)	SEPARA -TION (M)	AXIAL TENSION (KN)	BENDING MOMENT (KN-M)	TENSILE STRAIN (PCT)	BENDING STRAIN (PCT)	TOTAL STRAIN (PCT)	PERCNT ALLOW (PCT)
61	SAGBEND	-194.98	-29.69	3.45	294.60	0.000	0.000	296.11	0.00	0.0000	0.0000	0.0000	0.00
62	SAGBEND	-201.02	-30.06	3.45	300.65	0.000	0.000	296.11	0.00	0.0000	0.0000	0.0000	0.00
63	SAGBEND	-207.06	-30.42	3.45	306.70	0.000	0.000	296.11	0.00	0.0000	0.0000	0.0000	0.00
64	SAGBEND	-213.10	-30.78	3.44	312.75	0.000	0.000	296.11	0.00	0.0000	0.0000	0.0000	0.00
65	SAGBEND	-219.14	-31.15	3.44	318.80	0.000	0.000	296.11	0.00	0.0000	0.0000	0.0000	0.00
66	SAGBEND	-225.18	-31.51	3.44	324.85	0.000	0.000	296.11	0.00	0.0000	0.0000	0.0000	0.00
67	SAGBEND	-231.22	-31.87	3.43	330.90	0.000	0.000	296.11	0.00	0.0000	0.0000	0.0000	0.00
68	SAGBEND	-237.26	-32.24	3.43	336.95	0.000	0.000	296.10	0.00	0.0000	0.0000	0.0000	0.00
69	SAGBEND	-243.30	-32.60	3.43	343.00	0.000	0.000	296.10	0.00	0.0000	0.0000	0.0000	0.00
70	SAGBEND	-249.33	-32.96	3.43	349.05	0.000	0.000	296.10	0.00	0.0000	0.0000	0.0000	0.00
71	SAGBEND	-255.37	-33.32	3.42	355.10	0.000	0.000	296.10	0.00	0.0000	0.0000	0.0000	0.00
72	SAGBEND	-261.41	-33.68	3.42	361.15	0.000	0.000	296.10	0.00	0.0000	0.0000	0.0000	0.00
73	SAGBEND	-267.45	-34.04	3.42	367.20	0.000	0.000	296.10	0.00	0.0000	0.0000	0.0000	0.00
74	SAGBEND	-273.49	-34.40	3.41	373.25	0.000	0.000	296.10	0.00	0.0000	0.0000	0.0000	0.00
75	SAGBEND	-279.53	-34.76	3.41	379.30	0.000	0.000	296.10	0.00	0.0000	0.0000	0.0000	0.00
76	SAGBEND	-285.57	-35.12	3.41	385.35	0.000	0.000	296.10	0.00	0.0000	0.0000	0.0000	0.00
77	SAGBEND	-291.61	-35.48	3.40	391.40	0.000	0.000	296.10	0.00	0.0000	0.0000	0.0000	0.00
78	SAGBEND	-297.65	-35.84	3.40	397.45	0.000	0.000	296.09	0.00	0.0000	0.0000	0.0000	0.00
79	SAGBEND	-303.69	-36.20	3.40	403.50	0.000	0.000	296.09	0.00	0.0000	0.0000	0.0000	0.00
80	SAGBEND	-309.73	-36.56	3.39	409.55	0.000	0.000	296.09	0.00	0.0000	0.0000	0.0000	0.00
81	SAGBEND	-315.77	-36.92	3.39	415.60	0.000	0.000	296.09	0.00	0.0000	0.0000	0.0000	0.00
82	SAGBEND	-320.27	-37.18	3.39	420.11	0.000	0.000	296.09	0.00	0.0000	0.0000	0.0000	0.00
83	SAGBEND	-324.05	-37.40	3.32	423.90	0.000	0.000	296.07	0.00	0.0000	0.0000	0.0000	0.00
84	SAGBEND	-327.84	-37.62	3.25	427.70	0.000	0.000	296.05	0.00	0.0000	0.0000	0.0000	0.00
85	SAGBEND	-333.88	-37.96	3.14	433.75	0.000	0.000	296.02	0.00	0.0000	0.0000	0.0000	0.00
86	SAGBEND	-339.93	-38.29	3.03	439.80	0.000	0.000	295.99	0.00	0.0000	0.0000	0.0000	0.00
87	SAGBEND	-345.97	-38.60	2.92	445.85	0.000	0.000	295.96	0.00	0.0000	0.0000	0.0000	0.00
88	SAGBEND	-352.01	-38.90	2.81	451.90	0.000	0.000	295.93	0.00	0.0000	0.0000	0.0000	0.00
89	SAGBEND	-358.05	-39.19	2.70	457.95	0.000	0.000	295.90	0.00	0.0000	0.0000	0.0000	0.00
90	SAGBEND	-364.10	-39.47	2.59	464.00	0.000	0.000	295.88	0.00	0.0000	0.0000	0.0000	0.00
91	SAGBEND	-370.14	-39.74	2.48	470.05	0.000	0.000	295.85	0.00	0.0000	0.0000	0.0000	0.00
92	SAGBEND	-376.18	-39.99	2.37	476.10	0.000	0.000	295.83	0.00	0.0000	0.0000	0.0000	0.00
93	SAGBEND	-382.23	-40.24	2.26	482.15	0.000	0.000	295.80	0.00	0.0000	0.0000	0.0000	0.00
94	SAGBEND	-388.27	-40.47	2.15	488.20	0.000	0.000	295.78	0.00	0.0000	0.0000	0.0000	0.00
95	SAGBEND	-394.32	-40.69	2.04	494.25	0.000	0.000	295.76	0.00	0.0000	0.0000	0.0000	0.00
96	SAGBEND	-400.37	-40.90	1.93	500.30	0.000	0.000	295.74	0.00	0.0000	0.0000	0.0000	0.00
97	SAGBEND	-406.41	-41.10	1.82	506.35	0.000	0.000	295.72	0.00	0.0000	0.0000	0.0000	0.00
98	SAGBEND	-412.46	-41.28	1.70	512.40	0.000	0.000	295.70	0.00	0.0000	0.0000	0.0000	0.00
99	SAGBEND	-418.51	-41.46	1.59	518.45	0.000	0.000	295.69	0.00	0.0000	0.0000	0.0000	0.00
100	SAGBEND	-424.55	-41.62	1.48	524.49	0.000	0.000	295.67	0.00	0.0000	0.0000	0.0000	0.00
101	SAGBEND	-430.60	-41.77	1.37	530.54	0.000	0.000	295.66	0.00	0.0000	0.0000	0.0000	0.00
102	SAGBEND	-436.65	-41.91	1.26	536.59	0.000	0.000	295.65	0.00	0.0000	0.0000	0.0000	0.00
103	SAGBEND	-442.70	-42.04	1.15	542.64	0.000	0.000	295.63	0.00	0.0000	0.0000	0.0000	0.00
104	SAGBEND	-448.75	-42.15	1.04	548.69	0.000	0.000	295.62	0.00	0.0000	0.0000	0.0000	0.00
105	SAGBEND	-454.80	-42.26	0.93	554.74	0.000	0.000	295.61	0.00	0.0000	0.0000	0.0000	0.00

S T A T I C P I P E C O O R D I N A T E S, F O R C E S A N D S T R A I N S

NODE NO.	PIPE SECTION	X COORD (M)	Y COORD (M)	VERT ANGLE (DEG)	PIPE LENGTH (M)	SUPPORT REACTION (KN)	SEPARA -TION (M)	AXIAL TENSION (KN)	BENDING MOMENT (KN-M)	TENSILE STRAIN (PCT)	BENDING STRAIN (PCT)	TOTAL STRAIN (PCT)	PERCNT ALLOW (PCT)
106	SAGBEND	-460.84	-42.35	0.82	560.79	0.000	0.000	295.60	0.00	0.0000	0.0000	0.0000	0.00
107	SAGBEND	-466.89	-42.43	0.71	566.84	0.000	0.000	295.60	0.00	0.0000	0.0000	0.0000	0.00
108	SAGBEND	-472.94	-42.50	0.60	572.89	0.000	0.000	295.59	0.00	0.0000	0.0000	0.0000	0.00
109	SAGBEND	-478.99	-42.56	0.49	578.94	0.000	0.000	295.58	0.00	0.0000	0.0000	0.0000	0.00
110	SAGBEND	-485.04	-42.60	0.38	584.99	0.000	0.000	295.58	0.00	0.0000	0.0000	0.0000	0.00
111	SAGBEND	-491.09	-42.64	0.27	591.04	0.000	0.000	295.58	0.00	0.0000	0.0000	0.0000	0.00
112	SAGBEND	-497.14	-42.66	0.16	597.09	0.000	0.000	295.57	0.00	0.0000	0.0000	0.0000	0.00
113	SEABED	-503.19	-42.67	0.05	603.14	0.156	0.000	295.57	0.00	0.0000	0.0000	0.0000	0.00
114	SEABED	-509.24	-42.67	0.01	609.19	0.482	0.000	295.57	0.00	0.0000	0.0000	0.0000	0.00
115	SEABED	-515.29	-42.67	0.00	615.24	0.557	0.000	295.57	0.00	0.0000	0.0000	0.0000	0.00
116	SEABED	-521.34	-42.67	0.00	621.29	0.569	0.000	295.57	0.00	0.0000	0.0000	0.0000	0.00
117	SEABED	-527.39	-42.67	0.00	627.34	0.571	0.000	295.57	0.00	0.0000	0.0000	0.0000	0.00
118	SEABED	-533.44	-42.67	0.00	633.39	0.571	0.000	295.57	0.00	0.0000	0.0000	0.0000	0.00
119	SEABED	-539.49	-42.67	0.00	639.44	0.571	0.000	295.57	0.00	0.0000	0.0000	0.0000	0.00
120	SEABED	-545.54	-42.67	0.00	645.49	0.571	0.000	295.57	0.00	0.0000	0.0000	0.0000	0.00
121	SEABED	-551.59	-42.67	0.00	651.54	0.571	0.000	295.57	0.00	0.0000	0.0000	0.0000	0.00
122	SEABED	-557.64	-42.67	0.00	657.59	0.571	0.000	295.57	0.00	0.0000	0.0000	0.0000	0.00
123	SEABED	-563.69	-42.67	0.00	663.64	0.571	0.000	295.57	0.00	0.0000	0.0000	0.0000	0.00
124	SEABED	-569.74	-42.67	0.00	669.69	0.571	0.000	295.57	0.00	0.0000	0.0000	0.0000	0.00
125	SEABED	-575.79	-42.67	0.00	675.74	0.571	0.000	295.57	0.00	0.0000	0.0000	0.0000	0.00
126	SEABED	-581.84	-42.67	0.00	681.79	0.571	0.000	295.57	0.00	0.0000	0.0000	0.0000	0.00
127	SEABED	-587.89	-42.67	0.00	687.84	0.571	0.000	295.57	0.00	0.0000	0.0000	0.0000	0.00
128	SEABED	-593.94	-42.67	0.00	693.89	0.571	0.000	295.57	0.00	0.0000	0.0000	0.0000	0.00
129	SEABED	-599.99	-42.67	0.00	699.94	0.571	0.000	295.57	0.00	0.0000	0.0000	0.0000	0.00
130	SEABED	-606.04	-42.67	0.00	705.99	0.571	0.000	295.57	0.00	0.0000	0.0000	0.0000	0.00
131	SEABED	-612.09	-42.67	0.00	712.04	0.571	0.000	295.57	0.00	0.0000	0.0000	0.0000	0.00
132	SEABED	-618.14	-42.67	0.00	718.09	0.571	0.000	295.57	0.00	0.0000	0.0000	0.0000	0.00
133	SEABED	-624.19	-42.67	0.00	724.14	0.571	0.000	295.57	0.00	0.0000	0.0000	0.0000	0.00
134	SEABED	-630.24	-42.67	0.00	730.19	0.571	0.000	295.57	0.00	0.0000	0.0000	0.0000	0.00
135	SEABED	-636.29	-42.67	0.00	736.24	0.571	0.000	295.57	0.00	0.0000	0.0000	0.0000	0.00
136	SEABED	-642.34	-42.67	0.00	742.29	0.571	0.000	295.57	0.00	0.0000	0.0000	0.0000	0.00
137	SEABED	-648.38	-42.67	0.00	748.34	0.571	0.000	295.57	0.00	0.0000	0.0000	0.0000	0.00
138	SEABED	-654.43	-42.67	0.00	754.38	0.571	0.000	295.57	0.00	0.0000	0.0000	0.0000	0.00
139	SEABED	-660.48	-42.67	0.00	760.43	0.571	0.000	295.57	0.00	0.0000	0.0000	0.0000	0.00
140	SEABED	-666.53	-42.67	0.00	766.48	0.571	0.000	295.57	0.00	0.0000	0.0000	0.0000	0.00
141	SEABED	-672.58	-42.67	0.00	772.53	0.571	0.000	295.57	0.00	0.0000	0.0000	0.0000	0.00
142	SEABED	-678.63	-42.67	0.00	778.58	0.571	0.000	295.57	0.00	0.0000	0.0000	0.0000	0.00
143	SEABED	-684.68	-42.67	0.00	784.63	0.571	0.000	295.57	0.00	0.0000	0.0000	0.0000	0.00
144	SEABED	-690.73	-42.67	0.00	790.68	0.571	0.000	295.57	0.00	0.0000	0.0000	0.0000	0.00
145	SEABED	-696.78	-42.67	0.00	796.73	0.570	0.000	295.57	0.00	0.0000	0.0000	0.0000	0.00
146	SEABED	-702.83	-42.67	0.00	802.78	0.567	0.000	295.57	0.00	0.0000	0.0000	0.0000	0.00
147	SEABED	-708.88	-42.67	0.00	808.83	0.548	0.000	295.57	0.00	0.0000	0.0000	0.0000	0.00
148	SEABED	-714.93	-42.67	-0.01	814.88	0.410	0.000	295.57	0.00	0.0000	0.0000	0.0000	0.00
149	SEABED	-720.14	-42.67	-0.06	820.09	0.000	0.000	295.57	0.00	0.0000	0.0000	0.0000	0.00

S T A T I C P I P E C O O R D I N A T E S, F O R C E S A N D S T R A I N S

NODE NO.	PIPE SECTION	X COORD (M)	Y COORD (M)	VERT ANGLE (DEG)	PIPE LENGTH (M)	SUPPORT REACTION (KN)	SEPARA -TION (M)	AXIAL TENSION (KN)	BENDING MOMENT (KN-M)	TENSILE STRAIN (PCT)	BENDING STRAIN (PCT)	TOTAL STRAIN (PCT)	PERCNT ALLOW (PCT)
1	LAYBARGE	96.31	6.41	1.93	0.00	9.935	0.000	0.00	2.74	0.0000	0.0021	0.0021	0.00
3	LAYBARGE	84.28	6.05	1.58	12.04	24.123	0.000	-0.73	-19.17	0.0000	-0.0143	0.0144	0.00
5	LAYBARGE	73.45	5.73	1.90	22.87	24.472	0.000	-1.39	-29.59	-0.0001	-0.0221	0.0222	0.00
7	TENSIONR	60.10	5.24	2.30	36.23	32.058	0.000	359.82	-22.66	0.0167	-0.0169	0.0337	0.00
9	LAYBARGE	51.10	4.87	2.21	45.24	0.000	0.000	359.10	28.04	0.0167	0.0210	0.0377	0.00
10	LAYBARGE	46.45	4.70	1.93	49.89	7.542	0.000	358.77	14.73	0.0167	0.0110	0.0277	0.00
12	LAYBARGE	35.36	4.31	2.64	60.99	40.286	0.000	357.73	-81.86	0.0166	-0.0612	0.0779	0.00
14	LAYBARGE	25.34	3.64	5.21	71.03	51.592	0.000	356.16	-134.35	0.0166	-0.1005	0.1171	0.00
16	LAYBARGE	19.31	3.01	6.49	77.09	0.000	0.000	355.35	-36.71	0.0165	-0.0275	0.0440	0.00
17	LAYBARGE	8.88	1.76	7.33	87.60	38.687	0.000	352.76	-60.41	0.0164	-0.0452	0.0616	0.00
19	LAYBARGE	4.88	1.23	7.69	91.63	0.000	0.000	351.81	-4.73	0.0164	-0.0035	0.0199	0.00
20	LAYBARGE	3.05	0.98	7.66	93.48	0.000	0.363	351.31	13.48	0.0163	0.0101	0.0264	0.00
24	STINGER	-7.58	-0.37	6.76	104.19	0.000	0.441	348.95	29.67	0.0162	0.0222	0.0384	0.00
26	STINGER	-16.65	-1.43	6.80	113.32	9.573	0.000	347.87	-47.48	0.0161	-0.0355	0.0517	0.00
29	STINGER	-26.47	-2.77	9.41	123.24	51.652	0.000	345.69	-199.14	0.0160	-0.1690	0.1850	0.00
31	STINGER	-37.18	-4.96	13.61	134.17	42.697	0.000	343.78	-165.00	0.0159	-0.1241	0.1401	0.00
33	STINGER	-40.10	-5.70	14.59	137.18	0.000	0.317	343.45	-94.29	0.0158	-0.0705	0.0865	0.00
35	SAGBEND	-46.06	-7.31	15.33	143.35	0.000	0.000	342.05	-10.18	0.0157	-0.0076	0.0235	0.00
36	SAGBEND	-51.89	-8.90	15.15	149.40	0.000	0.000	340.44	28.68	0.0156	0.0214	0.0373	0.00
37	SAGBEND	-57.74	-10.45	14.55	155.45	0.000	0.000	338.86	47.32	0.0155	0.0354	0.0511	0.00
38	SAGBEND	-63.61	-11.93	13.73	161.50	0.000	0.000	337.36	56.40	0.0154	0.0422	0.0579	0.00
39	SAGBEND	-69.49	-13.32	12.82	167.55	0.000	0.000	335.96	60.93	0.0153	0.0456	0.0612	0.00
40	SAGBEND	-75.40	-14.62	11.86	173.60	0.000	0.000	334.66	63.23	0.0152	0.0473	0.0628	0.00
41	SAGBEND	-81.34	-15.81	10.87	179.65	0.000	0.000	333.47	64.35	0.0151	0.0481	0.0636	0.00
42	SAGBEND	-87.29	-16.90	9.86	185.70	0.000	0.000	332.38	64.67	0.0150	0.0484	0.0638	0.00
43	SAGBEND	-93.26	-17.88	8.86	191.75	0.000	0.000	331.40	64.13	0.0149	0.0480	0.0634	0.00
44	SAGBEND	-99.24	-18.76	7.88	197.80	0.000	0.000	330.52	62.22	0.0149	0.0465	0.0619	0.00
45	SAGBEND	-105.24	-19.54	6.95	203.85	0.000	0.000	329.75	57.67	0.0148	0.0431	0.0584	0.00
46	SAGBEND	-111.25	-20.23	6.12	209.90	0.000	0.000	329.09	47.73	0.0148	0.0357	0.0510	0.00
47	SAGBEND	-117.27	-20.84	5.52	215.95	0.000	0.000	328.52	26.68	0.0147	0.0200	0.0352	0.00
48	SAGBEND	-121.41	-21.23	5.37	220.11	0.000	0.000	328.14	0.00	0.0147	0.0000	0.0153	0.00
49	SAGBEND	-125.37	-21.51	3.94	224.08	0.000	0.000	328.24	0.00	0.0000	0.0000	0.0000	0.00
50	SAGBEND	-129.33	-21.78	3.94	228.05	0.000	0.000	328.24	0.00	0.0000	0.0000	0.0000	0.00
51	SAGBEND	-135.37	-22.19	3.93	234.10	0.000	0.000	328.24	0.00	0.0000	0.0000	0.0000	0.00
52	SAGBEND	-141.40	-22.61	3.93	240.15	0.000	0.000	328.24	0.00	0.0000	0.0000	0.0000	0.00
53	SAGBEND	-147.44	-23.02	3.93	246.20	0.000	0.000	328.24	0.00	0.0000	0.0000	0.0000	0.00
54	SAGBEND	-153.48	-23.44	3.93	252.25	0.000	0.000	328.24	0.00	0.0000	0.0000	0.0000	0.00
55	SAGBEND	-159.51	-23.85	3.92	258.30	0.000	0.000	328.24	0.00	0.0000	0.0000	0.0000	0.00
56	SAGBEND	-165.55	-24.27	3.92	264.35	0.000	0.000	328.23	0.00	0.0000	0.0000	0.0000	0.00
57	SAGBEND	-171.58	-24.68	3.92	270.40	0.000	0.000	328.23	0.00	0.0000	0.0000	0.0000	0.00
58	SAGBEND	-177.62	-25.09	3.92	276.45	0.000	0.000	328.23	0.00	0.0000	0.0000	0.0000	0.00
59	SAGBEND	-183.66	-25.51	3.91	282.50	0.000	0.000	328.23	0.00	0.0000	0.0000	0.0000	0.00
60	SAGBEND	-189.69	-25.92	3.91	288.55	0.000	0.000	328.23	0.00	0.0000	0.0000	0.0000	0.00

S T A T I C P I P E C O O R D I N A T E S, F O R C E S A N D S T R A I N S

NODE NO.	PIPE SECTION	X COORD (M)	Y COORD (M)	VERT ANGLE (DEG)	PIPE LENGTH (M)	SUPPORT REACTION (KN)	SEPARA -TION (M)	AXIAL TENSION (KN)	BENDING MOMENT (KN-M)	TENSILE STRAIN (PCT)	BENDING STRAIN (PCT)	TOTAL STRAIN (PCT)	PERCNT ALLOW (PCT)
61	SAGBEND	-195.73	-26.33	3.91	294.60	0.000	0.000	328.23	0.00	0.0000	0.0000	0.0000	0.00
62	SAGBEND	-201.76	-26.74	3.90	300.65	0.000	0.000	328.23	0.00	0.0000	0.0000	0.0000	0.00
63	SAGBEND	-207.80	-27.15	3.90	306.70	0.000	0.000	328.23	0.00	0.0000	0.0000	0.0000	0.00
64	SAGBEND	-213.84	-27.57	3.90	312.75	0.000	0.000	328.23	0.00	0.0000	0.0000	0.0000	0.00
65	SAGBEND	-219.87	-27.98	3.90	318.80	0.000	0.000	328.22	0.00	0.0000	0.0000	0.0000	0.00
66	SAGBEND	-225.91	-28.39	3.89	324.85	0.000	0.000	328.22	0.00	0.0000	0.0000	0.0000	0.00
67	SAGBEND	-231.94	-28.80	3.89	330.90	0.000	0.000	328.22	0.00	0.0000	0.0000	0.0000	0.00
68	SAGBEND	-237.98	-29.21	3.89	336.95	0.000	0.000	328.22	0.00	0.0000	0.0000	0.0000	0.00
69	SAGBEND	-244.02	-29.62	3.89	343.00	0.000	0.000	328.22	0.00	0.0000	0.0000	0.0000	0.00
70	SAGBEND	-250.05	-30.03	3.88	349.05	0.000	0.000	328.22	0.00	0.0000	0.0000	0.0000	0.00
71	SAGBEND	-256.09	-30.44	3.88	355.10	0.000	0.000	328.22	0.00	0.0000	0.0000	0.0000	0.00
72	SAGBEND	-262.12	-30.85	3.88	361.15	0.000	0.000	328.22	0.00	0.0000	0.0000	0.0000	0.00
73	SAGBEND	-268.16	-31.26	3.87	367.20	0.000	0.000	328.22	0.00	0.0000	0.0000	0.0000	0.00
74	SAGBEND	-274.20	-31.66	3.87	373.25	0.000	0.000	328.21	0.00	0.0000	0.0000	0.0000	0.00
75	SAGBEND	-280.23	-32.07	3.87	379.30	0.000	0.000	328.21	0.00	0.0000	0.0000	0.0000	0.00
76	SAGBEND	-286.27	-32.48	3.87	385.35	0.000	0.000	328.21	0.00	0.0000	0.0000	0.0000	0.00
77	SAGBEND	-292.30	-32.89	3.86	391.40	0.000	0.000	328.21	0.00	0.0000	0.0000	0.0000	0.00
78	SAGBEND	-298.34	-33.30	3.86	397.45	0.000	0.000	328.21	0.00	0.0000	0.0000	0.0000	0.00
79	SAGBEND	-304.38	-33.70	3.86	403.50	0.000	0.000	328.21	0.00	0.0000	0.0000	0.0000	0.00
80	SAGBEND	-310.41	-34.11	3.85	409.55	0.000	0.000	328.21	0.00	0.0000	0.0000	0.0000	0.00
81	SAGBEND	-316.45	-34.52	3.85	415.60	0.000	0.000	328.21	0.00	0.0000	0.0000	0.0000	0.00
82	SAGBEND	-320.95	-34.82	3.85	420.11	0.000	0.000	328.21	0.00	0.0000	0.0000	0.0000	0.00
83	SAGBEND	-324.73	-35.07	3.79	423.91	0.000	0.000	328.18	0.00	0.0000	0.0000	0.0000	0.00
84	SAGBEND	-328.52	-35.32	3.73	427.70	0.000	0.000	328.16	0.00	0.0000	0.0000	0.0000	0.00
85	SAGBEND	-334.56	-35.71	3.63	433.75	0.000	0.000	328.12	0.00	0.0000	0.0000	0.0000	0.00
86	SAGBEND	-340.60	-36.09	3.53	439.80	0.000	0.000	328.09	0.00	0.0000	0.0000	0.0000	0.00
87	SAGBEND	-346.64	-36.45	3.43	445.85	0.000	0.000	328.05	0.00	0.0000	0.0000	0.0000	0.00
88	SAGBEND	-352.68	-36.81	3.33	451.90	0.000	0.000	328.02	0.00	0.0000	0.0000	0.0000	0.00
89	SAGBEND	-358.72	-37.16	3.23	457.95	0.000	0.000	327.99	0.00	0.0000	0.0000	0.0000	0.00
90	SAGBEND	-364.76	-37.49	3.13	464.00	0.000	0.000	327.95	0.00	0.0000	0.0000	0.0000	0.00
91	SAGBEND	-370.80	-37.82	3.03	470.05	0.000	0.000	327.92	0.00	0.0000	0.0000	0.0000	0.00
92	SAGBEND	-376.84	-38.13	2.93	476.10	0.000	0.000	327.89	0.00	0.0000	0.0000	0.0000	0.00
93	SAGBEND	-382.88	-38.43	2.83	482.15	0.000	0.000	327.87	0.00	0.0000	0.0000	0.0000	0.00
94	SAGBEND	-388.93	-38.73	2.73	488.20	0.000	0.000	327.84	0.00	0.0000	0.0000	0.0000	0.00
95	SAGBEND	-394.97	-39.01	2.63	494.25	0.000	0.000	327.81	0.00	0.0000	0.0000	0.0000	0.00
96	SAGBEND	-401.01	-39.28	2.53	500.30	0.000	0.000	327.79	0.00	0.0000	0.0000	0.0000	0.00
97	SAGBEND	-407.06	-39.54	2.43	506.35	0.000	0.000	327.76	0.00	0.0000	0.0000	0.0000	0.00
98	SAGBEND	-413.10	-39.80	2.33	512.40	0.000	0.000	327.74	0.00	0.0000	0.0000	0.0000	0.00
99	SAGBEND	-419.15	-40.04	2.23	518.45	0.000	0.000	327.71	0.00	0.0000	0.0000	0.0000	0.00
100	SAGBEND	-425.19	-40.27	2.13	524.50	0.000	0.000	327.69	0.00	0.0000	0.0000	0.0000	0.00
101	SAGBEND	-431.24	-40.49	2.03	530.55	0.000	0.000	327.67	0.00	0.0000	0.0000	0.0000	0.00
102	SAGBEND	-437.28	-40.70	1.93	536.60	0.000	0.000	327.65	0.00	0.0000	0.0000	0.0000	0.00
103	SAGBEND	-443.33	-40.90	1.83	542.65	0.000	0.000	327.63	0.00	0.0000	0.0000	0.0000	0.00
104	SAGBEND	-449.38	-41.08	1.73	548.70	0.000	0.000	327.62	0.00	0.0000	0.0000	0.0000	0.00
105	SAGBEND	-455.43	-41.26	1.63	554.75	0.000	0.000	327.60	0.00	0.0000	0.0000	0.0000	0.00

S T A T I C P I P E C O O R D I N A T E S, F O R C E S A N D S T R A I N S

NODE NO.	PIPE SECTION	X COORD (M)	Y COORD (M)	VERT ANGLE (DEG)	PIPE LENGTH (M)	SUPPORT REACTION (KN)	SEPARA -TION (M)	AXIAL TENSION (KN)	BENDING MOMENT (KN-M)	TENSILE STRAIN (PCT)	BENDING STRAIN (PCT)	TOTAL STRAIN (PCT)	PERCNT ALLOW (PCT)
106	SAGBEND	-461.47	-41.43	1.53	560.80	0.000	0.000	327.58	0.00	0.0000	0.0000	0.0000	0.00
107	SAGBEND	-467.52	-41.58	1.43	566.85	0.000	0.000	327.57	0.00	0.0000	0.0000	0.0000	0.00
108	SAGBEND	-473.57	-41.73	1.33	572.90	0.000	0.000	327.55	0.00	0.0000	0.0000	0.0000	0.00
109	SAGBEND	-479.62	-41.87	1.23	578.95	0.000	0.000	327.54	0.00	0.0000	0.0000	0.0000	0.00
110	SAGBEND	-485.67	-41.99	1.13	585.00	0.000	0.000	327.53	0.00	0.0000	0.0000	0.0000	0.00
111	SAGBEND	-491.71	-42.11	1.03	591.05	0.000	0.000	327.52	0.00	0.0000	0.0000	0.0000	0.00
112	SAGBEND	-497.76	-42.21	0.93	597.10	0.000	0.000	327.51	0.00	0.0000	0.0000	0.0000	0.00
113	SAGBEND	-503.81	-42.30	0.83	603.15	0.000	0.000	327.50	0.00	0.0000	0.0000	0.0000	0.00
114	SAGBEND	-509.86	-42.39	0.73	609.20	0.000	0.000	327.49	0.00	0.0000	0.0000	0.0000	0.00
115	SAGBEND	-515.91	-42.46	0.63	615.25	0.000	0.000	327.49	0.00	0.0000	0.0000	0.0000	0.00
116	SAGBEND	-521.96	-42.52	0.54	621.30	0.000	0.000	327.48	0.00	0.0000	0.0000	0.0000	0.00
117	SAGBEND	-528.01	-42.57	0.44	627.35	0.000	0.000	327.48	0.00	0.0000	0.0000	0.0000	0.00
118	SAGBEND	-534.06	-42.61	0.34	633.40	0.000	0.000	327.47	0.00	0.0000	0.0000	0.0000	0.00
119	SAGBEND	-540.11	-42.64	0.24	639.45	0.000	0.000	327.47	0.00	0.0000	0.0000	0.0000	0.00
120	SAGBEND	-546.16	-42.66	0.14	645.50	0.000	0.000	327.47	0.00	0.0000	0.0000	0.0000	0.00
121	SEABED	-552.21	-42.67	0.04	651.55	0.181	0.000	327.47	0.00	0.0000	0.0000	0.0000	0.00
122	SEABED	-558.26	-42.67	0.01	657.60	0.487	0.000	327.47	0.00	0.0000	0.0000	0.0000	0.00
123	SEABED	-564.31	-42.67	0.00	663.65	0.556	0.000	327.47	0.00	0.0000	0.0000	0.0000	0.00
124	SEABED	-570.36	-42.67	0.00	669.70	0.568	0.000	327.47	0.00	0.0000	0.0000	0.0000	0.00
125	SEABED	-576.41	-42.67	0.00	675.75	0.570	0.000	327.47	0.00	0.0000	0.0000	0.0000	0.00
126	SEABED	-582.46	-42.67	0.00	681.80	0.571	0.000	327.47	0.00	0.0000	0.0000	0.0000	0.00
127	SEABED	-588.51	-42.67	0.00	687.85	0.571	0.000	327.47	0.00	0.0000	0.0000	0.0000	0.00
128	SEABED	-594.56	-42.67	0.00	693.90	0.571	0.000	327.47	0.00	0.0000	0.0000	0.0000	0.00
129	SEABED	-600.61	-42.67	0.00	699.95	0.571	0.000	327.47	0.00	0.0000	0.0000	0.0000	0.00
130	SEABED	-606.66	-42.67	0.00	706.00	0.571	0.000	327.47	0.00	0.0000	0.0000	0.0000	0.00
131	SEABED	-612.71	-42.67	0.00	712.05	0.571	0.000	327.47	0.00	0.0000	0.0000	0.0000	0.00
132	SEABED	-618.76	-42.67	0.00	718.10	0.571	0.000	327.47	0.00	0.0000	0.0000	0.0000	0.00
133	SEABED	-624.81	-42.67	0.00	724.15	0.571	0.000	327.47	0.00	0.0000	0.0000	0.0000	0.00
134	SEABED	-630.86	-42.67	0.00	730.20	0.571	0.000	327.47	0.00	0.0000	0.0000	0.0000	0.00
135	SEABED	-636.91	-42.67	0.00	736.25	0.571	0.000	327.47	0.00	0.0000	0.0000	0.0000	0.00
136	SEABED	-642.96	-42.67	0.00	742.30	0.571	0.000	327.47	0.00	0.0000	0.0000	0.0000	0.00
137	SEABED	-649.01	-42.67	0.00	748.35	0.571	0.000	327.47	0.00	0.0000	0.0000	0.0000	0.00
138	SEABED	-655.06	-42.67	0.00	754.40	0.571	0.000	327.47	0.00	0.0000	0.0000	0.0000	0.00
139	SEABED	-661.11	-42.67	0.00	760.45	0.571	0.000	327.47	0.00	0.0000	0.0000	0.0000	0.00
140	SEABED	-667.16	-42.67	0.00	766.50	0.571	0.000	327.47	0.00	0.0000	0.0000	0.0000	0.00
141	SEABED	-673.21	-42.67	0.00	772.55	0.571	0.000	327.47	0.00	0.0000	0.0000	0.0000	0.00
142	SEABED	-679.26	-42.67	0.00	778.60	0.571	0.000	327.47	0.00	0.0000	0.0000	0.0000	0.00
143	SEABED	-685.31	-42.67	0.00	784.65	0.571	0.000	327.47	0.00	0.0000	0.0000	0.0000	0.00
144	SEABED	-691.36	-42.67	0.00	790.70	0.571	0.000	327.47	0.00	0.0000	0.0000	0.0000	0.00
145	SEABED	-697.41	-42.67	0.00	796.75	0.570	0.000	327.47	0.00	0.0000	0.0000	0.0000	0.00
146	SEABED	-703.46	-42.67	0.00	802.80	0.566	0.000	327.47	0.00	0.0000	0.0000	0.0000	0.00
147	SEABED	-709.51	-42.67	0.00	808.85	0.544	0.000	327.47	0.00	0.0000	0.0000	0.0000	0.00
148	SEABED	-715.56	-42.67	-0.01	814.90	0.401	0.000	327.47	0.00	0.0000	0.0000	0.0000	0.00
149	SEABED	-720.77	-42.67	-0.06	820.11	0.000	0.000	327.47	0.00	0.0000	0.0000	0.0000	0.00

S T A T I C P I P E C O O R D I N A T E S, F O R C E S A N D S T R A I N S

NODE NO.	PIPE SECTION	X COORD (M)	Y COORD (M)	VERT ANGLE (DEG)	PIPE LENGTH (M)	SUPPORT REACTION (KN)	SEPARA -TION (M)	AXIAL TENSION (KN)	BENDING MOMENT (KN-M)	TENSILE STRAIN (PCT)	BENDING STRAIN (PCT)	TOTAL STRAIN (PCT)	PERCNT ALLOW (PCT)
1	LAYBARGE	96.31	6.41	1.93	0.00	9.933	0.000	0.00	2.74	0.0000	0.0021	0.0021	0.00
3	LAYBARGE	84.28	6.05	1.58	12.04	24.141	0.000	-0.73	-19.19	0.0000	-0.0144	0.0144	0.00
5	LAYBARGE	73.45	5.73	1.90	22.87	24.412	0.000	-1.39	-29.48	-0.0001	-0.0220	0.0221	0.00
7	TENSIONR	60.10	5.24	2.30	36.23	32.262	0.000	359.82	-22.97	0.0167	-0.0172	0.0339	0.00
9	LAYBARGE	51.10	4.87	2.21	45.24	0.000	0.000	359.10	29.02	0.0167	0.0217	0.0384	0.00
10	LAYBARGE	46.45	4.70	1.91	49.89	6.301	0.000	358.78	16.49	0.0167	0.0123	0.0290	0.00
12	LAYBARGE	35.36	4.31	2.71	60.99	46.389	0.000	357.68	-86.91	0.0166	-0.0650	0.0816	0.00
14	LAYBARGE	25.34	3.64	4.93	71.03	34.272	0.000	356.40	-98.01	0.0166	-0.0733	0.0899	0.00
16	LAYBARGE	19.31	3.06	6.02	77.09	0.000	0.000	355.42	-53.02	0.0165	-0.0397	0.0562	0.00
17	LAYBARGE	8.88	1.76	8.96	87.60	79.400	0.000	351.67	-211.37	0.0164	-0.2168	0.2332	0.00
19	LAYBARGE	4.91	1.06	10.67	91.63	0.000	0.000	351.21	-110.50	0.0163	-0.0826	0.0990	0.00
20	LAYBARGE	3.09	0.71	11.11	93.48	0.000	0.093	350.66	-76.21	0.0163	-0.0570	0.0733	0.00
24	STINGER	-7.56	-1.49	11.98	104.35	0.000	0.107	347.86	-21.61	0.0161	-0.0162	0.0323	0.00
26	STINGER	-16.48	-3.47	13.41	113.50	35.052	0.000	345.53	-126.38	0.0160	-0.0945	0.1106	0.00
29	STINGER	-26.05	-5.98	15.99	123.39	20.310	0.000	343.07	-117.59	0.0158	-0.0879	0.1039	0.00
31	STINGER	-36.47	-9.27	19.38	134.33	51.571	0.000	339.37	-179.36	0.0155	-0.1372	0.1529	0.00
33	STINGER	-39.31	-10.30	20.46	137.34	0.000	0.324	338.82	-104.99	0.0155	-0.0785	0.0943	0.00
35	SAGBEND	-44.92	-12.46	21.33	143.35	0.000	0.000	336.91	-17.74	0.0153	-0.0133	0.0289	0.00
36	SAGBEND	-50.56	-14.66	21.24	149.40	0.000	0.000	334.70	24.36	0.0152	0.0182	0.0338	0.00
37	SAGBEND	-56.21	-16.83	20.68	155.45	0.000	0.000	332.51	44.77	0.0150	0.0335	0.0489	0.00
38	SAGBEND	-61.88	-18.93	19.90	161.50	0.000	0.000	330.39	54.89	0.0149	0.0411	0.0564	0.00
39	SAGBEND	-67.58	-20.94	19.00	167.55	0.000	0.000	328.36	60.12	0.0147	0.0450	0.0602	0.00
40	SAGBEND	-73.32	-22.86	18.05	173.60	0.000	0.000	326.43	63.00	0.0146	0.0471	0.0623	0.00
41	SAGBEND	-79.09	-24.69	17.06	179.65	0.000	0.000	324.60	64.74	0.0144	0.0484	0.0635	0.00
42	SAGBEND	-84.89	-26.41	16.04	185.70	0.000	0.000	322.88	65.93	0.0143	0.0493	0.0643	0.00
43	SAGBEND	-90.72	-28.03	15.01	191.75	0.000	0.000	321.26	66.83	0.0142	0.0500	0.0649	0.00
44	SAGBEND	-96.57	-29.55	13.97	197.80	0.000	0.000	319.74	67.56	0.0141	0.0505	0.0654	0.00
45	SAGBEND	-102.46	-30.95	12.92	203.85	0.000	0.000	318.34	68.20	0.0140	0.0510	0.0658	0.00
46	SAGBEND	-108.37	-32.25	11.85	209.90	0.000	0.000	317.04	68.75	0.0139	0.0514	0.0661	0.00
47	SAGBEND	-114.30	-33.44	10.78	215.95	0.000	0.000	315.85	69.22	0.0138	0.0518	0.0664	0.00
48	SAGBEND	-120.25	-34.51	9.71	222.00	0.000	0.000	314.78	69.57	0.0137	0.0520	0.0666	0.00
49	SAGBEND	-126.23	-35.48	8.63	228.05	0.000	0.000	313.81	69.74	0.0136	0.0522	0.0667	0.00
50	SAGBEND	-132.22	-36.33	7.55	234.10	0.000	0.000	312.96	69.59	0.0136	0.0520	0.0666	0.00
51	SAGBEND	-138.22	-37.07	6.47	240.15	0.000	0.000	312.23	68.85	0.0135	0.0515	0.0660	0.00
52	SAGBEND	-144.24	-37.69	5.42	246.20	0.000	0.000	311.61	66.94	0.0135	0.0501	0.0645	0.00
53	SAGBEND	-150.27	-38.21	4.41	252.25	0.000	0.000	311.10	62.70	0.0134	0.0469	0.0613	0.00
54	SAGBEND	-156.30	-38.63	3.50	258.30	0.000	0.000	310.71	53.76	0.0134	0.0402	0.0546	0.00
55	SAGBEND	-162.34	-38.96	2.79	264.35	0.000	0.000	310.42	35.31	0.0134	0.0264	0.0408	0.00
56	SAGBEND	-168.09	-39.22	2.50	270.11	0.000	0.000	310.19	0.00	0.0134	0.0000	0.0145	0.00
57	SAGBEND	-174.44	-39.32	0.93	276.45	0.000	0.000	310.30	0.00	0.0000	0.0000	0.0000	0.00
58	SAGBEND	-180.48	-39.42	0.93	282.50	0.000	0.000	310.30	0.00	0.0000	0.0000	0.0000	0.00
59	SAGBEND	-186.53	-39.52	0.93	288.55	0.000	0.000	310.30	0.00	0.0000	0.0000	0.0000	0.00
60	SAGBEND	-192.58	-39.61	0.92	294.60	0.000	0.000	310.30	0.00	0.0000	0.0000	0.0000	0.00

S T A T I C P I P E C O O R D I N A T E S, F O R C E S A N D S T R A I N S

NODE NO.	PIPE SECTION	X COORD (M)	Y COORD (M)	VERT ANGLE (DEG)	PIPE LENGTH (M)	SUPPORT REACTION (KN)	SEPARA -TION (M)	AXIAL TENSION (KN)	BENDING MOMENT (KN-M)	TENSILE STRAIN (PCT)	BENDING STRAIN (PCT)	TOTAL STRAIN (PCT)	PERCNT ALLOW (PCT)
61	SAGBEND	-198.63	-39.71	0.92	300.65	0.000	0.000	310.30	0.00	0.0000	0.0000	0.0000	0.00
62	SAGBEND	-204.68	-39.81	0.92	306.70	0.000	0.000	310.30	0.00	0.0000	0.0000	0.0000	0.00
63	SAGBEND	-210.73	-39.91	0.92	312.75	0.000	0.000	310.30	0.00	0.0000	0.0000	0.0000	0.00
64	SAGBEND	-216.78	-40.00	0.91	318.80	0.000	0.000	310.30	0.00	0.0000	0.0000	0.0000	0.00
65	SAGBEND	-222.83	-40.10	0.91	324.85	0.000	0.000	310.30	0.00	0.0000	0.0000	0.0000	0.00
66	SAGBEND	-228.87	-40.19	0.91	330.90	0.000	0.000	310.30	0.00	0.0000	0.0000	0.0000	0.00
67	SAGBEND	-234.92	-40.29	0.90	336.95	0.000	0.000	310.30	0.00	0.0000	0.0000	0.0000	0.00
68	SAGBEND	-240.97	-40.39	0.90	343.00	0.000	0.000	310.30	0.00	0.0000	0.0000	0.0000	0.00
69	SAGBEND	-247.02	-40.48	0.90	349.05	0.000	0.000	310.30	0.00	0.0000	0.0000	0.0000	0.00
70	SAGBEND	-253.07	-40.58	0.90	355.10	0.000	0.000	310.30	0.00	0.0000	0.0000	0.0000	0.00
71	SAGBEND	-259.12	-40.67	0.89	361.15	0.000	0.000	310.30	0.00	0.0000	0.0000	0.0000	0.00
72	SAGBEND	-265.17	-40.76	0.89	367.20	0.000	0.000	310.30	0.00	0.0000	0.0000	0.0000	0.00
73	SAGBEND	-271.22	-40.86	0.89	373.25	0.000	0.000	310.30	0.00	0.0000	0.0000	0.0000	0.00
74	SAGBEND	-277.27	-40.95	0.88	379.30	0.000	0.000	310.30	0.00	0.0000	0.0000	0.0000	0.00
75	SAGBEND	-283.31	-41.04	0.88	385.35	0.000	0.000	310.30	0.00	0.0000	0.0000	0.0000	0.00
76	SAGBEND	-289.36	-41.14	0.88	391.40	0.000	0.000	310.30	0.00	0.0000	0.0000	0.0000	0.00
77	SAGBEND	-295.41	-41.23	0.88	397.45	0.000	0.000	310.30	0.00	0.0000	0.0000	0.0000	0.00
78	SAGBEND	-301.46	-41.32	0.87	403.50	0.000	0.000	310.30	0.00	0.0000	0.0000	0.0000	0.00
79	SAGBEND	-307.51	-41.41	0.87	409.55	0.000	0.000	310.30	0.00	0.0000	0.0000	0.0000	0.00
80	SAGBEND	-313.56	-41.51	0.87	415.59	0.000	0.000	310.30	0.00	0.0000	0.0000	0.0000	0.00
81	SAGBEND	-319.61	-41.60	0.86	421.64	0.000	0.000	310.30	0.00	0.0000	0.0000	0.0000	0.00
82	SAGBEND	-325.66	-41.69	0.86	427.69	0.000	0.000	310.30	0.00	0.0000	0.0000	0.0000	0.00
83	SAGBEND	-331.71	-41.78	0.86	433.74	0.000	0.000	310.30	0.00	0.0000	0.0000	0.0000	0.00
84	SAGBEND	-337.75	-41.87	0.85	439.79	0.000	0.000	310.30	0.00	0.0000	0.0000	0.0000	0.00
85	SAGBEND	-343.80	-41.96	0.85	445.84	0.000	0.000	310.29	0.00	0.0000	0.0000	0.0000	0.00
86	SAGBEND	-349.85	-42.05	0.85	451.89	0.000	0.000	310.29	0.00	0.0000	0.0000	0.0000	0.00
87	SAGBEND	-355.90	-42.14	0.85	457.94	0.000	0.000	310.29	0.00	0.0000	0.0000	0.0000	0.00
88	SAGBEND	-361.95	-42.23	0.84	463.99	0.000	0.000	310.29	0.00	0.0000	0.0000	0.0000	0.00
89	SAGBEND	-365.00	-42.27	0.84	467.05	0.000	0.000	310.29	0.00	0.0000	0.0000	0.0000	0.00
90	SAGBEND	-368.06	-42.32	0.84	470.10	0.000	0.000	310.29	0.00	0.0000	0.0000	0.0000	0.00
91	SAGBEND	-374.05	-42.40	0.74	476.09	0.000	0.000	310.29	0.00	0.0000	0.0000	0.0000	0.00
92	SAGBEND	-380.10	-42.47	0.63	482.14	0.000	0.000	310.28	0.00	0.0000	0.0000	0.0000	0.00
93	SAGBEND	-386.15	-42.53	0.53	488.19	0.000	0.000	310.27	0.00	0.0000	0.0000	0.0000	0.00
94	SAGBEND	-392.20	-42.58	0.42	494.24	0.000	0.000	310.27	0.00	0.0000	0.0000	0.0000	0.00
95	SAGBEND	-398.24	-42.62	0.31	500.29	0.000	0.000	310.27	0.00	0.0000	0.0000	0.0000	0.00
96	SAGBEND	-404.29	-42.65	0.21	506.34	0.000	0.000	310.26	0.00	0.0000	0.0000	0.0000	0.00
97	SAGBEND	-410.34	-42.67	0.10	512.39	0.017	0.000	310.26	-0.01	0.0000	0.0000	0.0000	0.00
98	SEABED	-416.39	-42.67	0.02	518.44	0.328	0.000	310.26	0.00	0.0000	0.0000	0.0000	0.00
99	SEABED	-422.44	-42.67	0.00	524.49	0.529	0.000	310.26	0.00	0.0000	0.0000	0.0000	0.00
100	SEABED	-428.49	-42.67	0.00	530.53	0.564	0.000	310.26	0.00	0.0000	0.0000	0.0000	0.00
101	SEABED	-434.54	-42.67	0.00	536.58	0.570	0.000	310.26	0.00	0.0000	0.0000	0.0000	0.00
102	SEABED	-440.59	-42.67	0.00	542.63	0.571	0.000	310.26	0.00	0.0000	0.0000	0.0000	0.00
103	SEABED	-446.64	-42.67	0.00	548.68	0.571	0.000	310.26	0.00	0.0000	0.0000	0.0000	0.00
104	SEABED	-452.69	-42.67	0.00	554.73	0.571	0.000	310.26	0.00	0.0000	0.0000	0.0000	0.00

S T A T I C P I P E C O O R D I N A T E S, F O R C E S A N D S T R A I N S

NODE NO.	PIPE SECTION	X COORD (M)	Y COORD (M)	VERT ANGLE (DEG)	PIPE LENGTH (M)	SUPPORT REACTION (KN)	SEPARA -TION (M)	AXIAL TENSION (KN)	BENDING MOMENT (KN-M)	TENSILE STRAIN (PCT)	BENDING STRAIN (PCT)	TOTAL STRAIN (PCT)	PERCNT ALLOW (PCT)
105	SEABED	-458.74	-42.67	0.00	560.78	0.571	0.000	310.26	0.00	0.0000	0.0000	0.0000	0.00
106	SEABED	-464.79	-42.67	0.00	566.83	0.571	0.000	310.26	0.00	0.0000	0.0000	0.0000	0.00
107	SEABED	-470.84	-42.67	0.00	572.88	0.571	0.000	310.26	0.00	0.0000	0.0000	0.0000	0.00
108	SEABED	-476.89	-42.67	0.00	578.93	0.571	0.000	310.26	0.00	0.0000	0.0000	0.0000	0.00
109	SEABED	-482.94	-42.67	0.00	584.98	0.571	0.000	310.26	0.00	0.0000	0.0000	0.0000	0.00
110	SEABED	-488.98	-42.67	0.00	591.03	0.571	0.000	310.26	0.00	0.0000	0.0000	0.0000	0.00
111	SEABED	-495.03	-42.67	0.00	597.08	0.571	0.000	310.26	0.00	0.0000	0.0000	0.0000	0.00
112	SEABED	-501.08	-42.67	0.00	603.13	0.571	0.000	310.26	0.00	0.0000	0.0000	0.0000	0.00
113	SEABED	-507.13	-42.67	0.00	609.18	0.571	0.000	310.26	0.00	0.0000	0.0000	0.0000	0.00
114	SEABED	-513.18	-42.67	0.00	615.23	0.571	0.000	310.26	0.00	0.0000	0.0000	0.0000	0.00
115	SEABED	-519.23	-42.67	0.00	621.28	0.571	0.000	310.26	0.00	0.0000	0.0000	0.0000	0.00
116	SEABED	-525.28	-42.67	0.00	627.32	0.571	0.000	310.26	0.00	0.0000	0.0000	0.0000	0.00
117	SEABED	-531.33	-42.67	0.00	633.37	0.571	0.000	310.26	0.00	0.0000	0.0000	0.0000	0.00
118	SEABED	-537.38	-42.67	0.00	639.42	0.571	0.000	310.26	0.00	0.0000	0.0000	0.0000	0.00
119	SEABED	-543.43	-42.67	0.00	645.47	0.571	0.000	310.26	0.00	0.0000	0.0000	0.0000	0.00
120	SEABED	-549.48	-42.67	0.00	651.52	0.571	0.000	310.26	0.00	0.0000	0.0000	0.0000	0.00
121	SEABED	-555.53	-42.67	0.00	657.57	0.571	0.000	310.26	0.00	0.0000	0.0000	0.0000	0.00
122	SEABED	-561.58	-42.67	0.00	663.62	0.571	0.000	310.26	0.00	0.0000	0.0000	0.0000	0.00
123	SEABED	-567.63	-42.67	0.00	669.67	0.571	0.000	310.26	0.00	0.0000	0.0000	0.0000	0.00
124	SEABED	-573.68	-42.67	0.00	675.72	0.571	0.000	310.26	0.00	0.0000	0.0000	0.0000	0.00
125	SEABED	-579.72	-42.67	0.00	681.77	0.571	0.000	310.26	0.00	0.0000	0.0000	0.0000	0.00
126	SEABED	-585.77	-42.67	0.00	687.82	0.571	0.000	310.26	0.00	0.0000	0.0000	0.0000	0.00
127	SEABED	-591.82	-42.67	0.00	693.87	0.571	0.000	310.26	0.00	0.0000	0.0000	0.0000	0.00
128	SEABED	-597.87	-42.67	0.00	699.92	0.571	0.000	310.26	0.00	0.0000	0.0000	0.0000	0.00
129	SEABED	-603.92	-42.67	0.00	705.97	0.571	0.000	310.26	0.00	0.0000	0.0000	0.0000	0.00
130	SEABED	-609.97	-42.67	0.00	712.02	0.571	0.000	310.26	0.00	0.0000	0.0000	0.0000	0.00
131	SEABED	-616.02	-42.67	0.00	718.07	0.571	0.000	310.26	0.00	0.0000	0.0000	0.0000	0.00
132	SEABED	-622.07	-42.67	0.00	724.11	0.571	0.000	310.26	0.00	0.0000	0.0000	0.0000	0.00
133	SEABED	-628.12	-42.67	0.00	730.16	0.571	0.000	310.26	0.00	0.0000	0.0000	0.0000	0.00
134	SEABED	-634.17	-42.67	0.00	736.21	0.571	0.000	310.26	0.00	0.0000	0.0000	0.0000	0.00
135	SEABED	-640.22	-42.67	0.00	742.26	0.571	0.000	310.26	0.00	0.0000	0.0000	0.0000	0.00
136	SEABED	-646.27	-42.67	0.00	748.31	0.571	0.000	310.26	0.00	0.0000	0.0000	0.0000	0.00
137	SEABED	-652.32	-42.67	0.00	754.36	0.571	0.000	310.26	0.00	0.0000	0.0000	0.0000	0.00
138	SEABED	-658.37	-42.67	0.00	760.41	0.571	0.000	310.26	0.00	0.0000	0.0000	0.0000	0.00
139	SEABED	-664.42	-42.67	0.00	766.46	0.571	0.000	310.26	0.00	0.0000	0.0000	0.0000	0.00
140	SEABED	-670.47	-42.67	0.00	772.51	0.571	0.000	310.26	0.00	0.0000	0.0000	0.0000	0.00
141	SEABED	-676.51	-42.67	0.00	778.56	0.571	0.000	310.26	0.00	0.0000	0.0000	0.0000	0.00
142	SEABED	-682.56	-42.67	0.00	784.61	0.571	0.000	310.26	0.00	0.0000	0.0000	0.0000	0.00
143	SEABED	-688.61	-42.67	0.00	790.66	0.571	0.000	310.26	0.00	0.0000	0.0000	0.0000	0.00
144	SEABED	-694.66	-42.67	0.00	796.71	0.571	0.000	310.26	0.00	0.0000	0.0000	0.0000	0.00
145	SEABED	-700.71	-42.67	0.00	802.76	0.571	0.000	310.26	0.00	0.0000	0.0000	0.0000	0.00
146	SEABED	-706.76	-42.67	0.00	808.81	0.571	0.000	310.26	0.00	0.0000	0.0000	0.0000	0.00
147	SEABED	-712.81	-42.67	0.00	814.85	0.571	0.000	310.26	0.00	0.0000	0.0000	0.0000	0.00
148	SEABED	-718.86	-42.67	0.00	820.90	0.571	0.000	310.26	0.00	0.0000	0.0000	0.0000	0.00
149	SEABED	-724.91	-42.67	0.00	826.95	0.571	0.000	310.26	0.00	0.0000	0.0000	0.0000	0.00

S T A T I C P I P E C O O R D I N A T E S, F O R C E S A N D S T R A I N S

NODE NO.	PIPE SECTION	X COORD (M)	Y COORD (M)	VERT ANGLE (DEG)	PIPE LENGTH (M)	SUPPORT REACTION (KN)	SEPARA -TION (M)	AXIAL TENSION (KN)	BENDING MOMENT (KN-M)	TENSILE STRAIN (PCT)	BENDING STRAIN (PCT)	TOTAL STRAIN (PCT)	PERCNT ALLOW (PCT)
150	SEABED	-730.96	-42.67	0.00	833.00	0.571	0.000	310.26	0.00	0.0000	0.0000	0.0000	0.00
151	SEABED	-737.01	-42.67	0.00	839.05	0.571	0.000	310.26	0.00	0.0000	0.0000	0.0000	0.00
152	SEABED	-743.06	-42.67	0.00	845.10	0.570	0.000	310.26	0.00	0.0000	0.0000	0.0000	0.00
153	SEABED	-749.11	-42.67	0.00	851.15	0.568	0.000	310.26	0.00	0.0000	0.0000	0.0000	0.00
154	SEABED	-755.16	-42.67	0.00	857.20	0.555	0.000	310.26	0.00	0.0000	0.0000	0.0000	0.00
155	SEABED	-761.21	-42.67	-0.01	863.25	0.393	0.000	310.26	0.00	0.0000	0.0000	0.0000	0.00
156	SEABED	-764.61	-42.67	-0.02	866.65	0.196	0.000	310.26	0.00	0.0000	0.0000	0.0000	0.00
157	SEABED	-768.01	-42.67	-0.06	870.06	0.000	0.000	310.26	0.00	0.0000	0.0000	0.0000	0.00

S T A T I C P I P E C O O R D I N A T E S, F O R C E S A N D S T R A I N S

NODE NO.	PIPE SECTION	X COORD (M)	Y COORD (M)	VERT ANGLE (DEG)	PIPE LENGTH (M)	SUPPORT REACTION (KN)	SEPARA -TION (M)	AXIAL TENSION (KN)	BENDING MOMENT (KN-M)	TENSILE STRAIN (PCT)	BENDING STRAIN (PCT)	TOTAL STRAIN (PCT)	PERCNT ALLOW (PCT)
1	LAYBARGE	96.31	6.41	1.93	0.00	9.934	0.000	0.00	2.74	0.0000	0.0021	0.0021	0.00
3	LAYBARGE	84.28	6.05	1.58	12.04	24.128	0.000	-0.73	-19.18	0.0000	-0.0143	0.0144	0.00
5	LAYBARGE	73.45	5.73	1.90	22.87	24.453	0.000	-1.39	-29.56	-0.0001	-0.0221	0.0222	0.00
7	TENSIONR	60.10	5.24	2.30	36.23	32.166	0.000	386.42	-22.72	0.0180	-0.0170	0.0350	0.00
9	LAYBARGE	51.10	4.87	2.21	45.24	0.000	0.000	385.70	28.34	0.0179	0.0212	0.0391	0.00
10	LAYBARGE	46.45	4.70	1.92	49.89	6.607	0.000	385.38	15.88	0.0179	0.0119	0.0298	0.00
12	LAYBARGE	35.36	4.31	2.68	60.99	44.715	0.000	384.30	-84.84	0.0179	-0.0634	0.0813	0.00
14	LAYBARGE	25.34	3.64	5.05	71.03	42.778	0.000	382.90	-114.14	0.0178	-0.0854	0.1032	0.00
16	LAYBARGE	19.31	3.04	6.22	77.09	0.000	0.000	381.99	-45.68	0.0178	-0.0342	0.0519	0.00
17	LAYBARGE	8.88	1.76	8.28	87.60	63.716	0.000	378.85	-149.83	0.0176	-0.1122	0.1298	0.00
19	LAYBARGE	4.90	1.13	9.44	91.63	0.000	0.000	378.12	-67.75	0.0176	-0.0507	0.0683	0.00
20	LAYBARGE	3.07	0.82	9.69	93.48	0.000	0.205	377.57	-40.64	0.0176	-0.0304	0.0480	0.00
24	STINGER	-7.62	-1.04	9.93	104.34	0.000	0.253	374.91	-6.98	0.0174	-0.0052	0.0227	0.00
26	STINGER	-16.62	-2.67	11.06	113.48	29.398	0.000	372.99	-114.00	0.0173	-0.0853	0.1026	0.00
29	STINGER	-26.28	-4.81	14.06	123.38	37.645	0.000	370.50	-170.30	0.0171	-0.1286	0.1458	0.00
31	STINGER	-36.78	-7.83	18.15	134.31	51.605	0.000	367.34	-187.19	0.0169	-0.1465	0.1636	0.00
33	STINGER	-39.64	-8.80	19.28	137.32	0.000	0.310	366.90	-109.22	0.0168	-0.0817	0.0987	0.00
35	SAGBEND	-45.31	-10.85	20.18	143.35	0.000	0.000	365.11	-19.52	0.0167	-0.0146	0.0316	0.00
36	SAGBEND	-50.99	-12.94	20.12	149.40	0.000	0.000	363.02	22.25	0.0165	0.0166	0.0335	0.00
37	SAGBEND	-56.68	-15.00	19.61	155.45	0.000	0.000	360.94	41.84	0.0164	0.0313	0.0481	0.00
38	SAGBEND	-62.39	-16.99	18.88	161.50	0.000	0.000	358.92	51.22	0.0162	0.0383	0.0550	0.00
39	SAGBEND	-68.13	-18.91	18.04	167.55	0.000	0.000	357.00	55.90	0.0161	0.0418	0.0584	0.00
40	SAGBEND	-73.89	-20.74	17.15	173.60	0.000	0.000	355.17	58.38	0.0160	0.0437	0.0602	0.00
41	SAGBEND	-79.69	-22.48	16.23	179.65	0.000	0.000	353.43	59.84	0.0158	0.0448	0.0612	0.00
42	SAGBEND	-85.51	-24.12	15.30	185.70	0.000	0.000	351.78	60.81	0.0157	0.0455	0.0618	0.00
43	SAGBEND	-91.36	-25.67	14.35	191.75	0.000	0.000	350.23	61.53	0.0156	0.0460	0.0623	0.00
44	SAGBEND	-97.23	-27.12	13.39	197.80	0.000	0.000	348.78	62.13	0.0155	0.0465	0.0627	0.00
45	SAGBEND	-103.13	-28.47	12.42	203.85	0.000	0.000	347.43	62.64	0.0154	0.0469	0.0630	0.00
46	SAGBEND	-109.05	-29.72	11.45	209.90	0.000	0.000	346.18	63.09	0.0153	0.0472	0.0633	0.00
47	SAGBEND	-114.99	-30.87	10.47	215.95	0.000	0.000	345.03	63.48	0.0152	0.0475	0.0635	0.00
48	SAGBEND	-120.95	-31.92	9.48	222.00	0.000	0.000	343.98	63.78	0.0151	0.0477	0.0637	0.00
49	SAGBEND	-126.92	-32.86	8.49	228.05	0.000	0.000	343.04	63.93	0.0151	0.0478	0.0637	0.00
50	SAGBEND	-132.91	-33.70	7.50	234.10	0.000	0.000	342.20	63.84	0.0150	0.0477	0.0636	0.00
51	SAGBEND	-138.92	-34.44	6.51	240.15	0.000	0.000	341.46	63.26	0.0149	0.0473	0.0632	0.00
52	SAGBEND	-144.94	-35.08	5.54	246.20	0.000	0.000	340.83	61.68	0.0149	0.0461	0.0620	0.00
53	SAGBEND	-150.96	-35.61	4.61	252.25	0.000	0.000	340.31	58.06	0.0149	0.0434	0.0592	0.00
54	SAGBEND	-157.00	-36.05	3.76	258.30	0.000	0.000	339.89	50.15	0.0148	0.0375	0.0533	0.00
55	SAGBEND	-163.04	-36.41	3.10	264.35	0.000	0.000	339.56	33.29	0.0148	0.0249	0.0407	0.00
56	SAGBEND	-168.79	-36.70	2.82	270.11	0.000	0.000	339.29	0.00	0.0148	0.0000	0.0158	0.00
57	SAGBEND	-175.13	-36.87	1.46	276.45	0.000	0.000	339.39	0.00	0.0000	0.0000	0.0000	0.00
58	SAGBEND	-181.17	-37.02	1.45	282.50	0.000	0.000	339.39	0.00	0.0000	0.0000	0.0000	0.00
59	SAGBEND	-187.22	-37.17	1.45	288.55	0.000	0.000	339.39	0.00	0.0000	0.0000	0.0000	0.00
60	SAGBEND	-193.27	-37.33	1.45	294.60	0.000	0.000	339.39	0.00	0.0000	0.0000	0.0000	0.00

S T A T I C P I P E C O O R D I N A T E S, F O R C E S A N D S T R A I N S

NODE NO.	PIPE SECTION	X COORD (M)	Y COORD (M)	VERT ANGLE (DEG)	PIPE LENGTH (M)	SUPPORT REACTION (KN)	SEPARA -TION (M)	AXIAL TENSION (KN)	BENDING MOMENT (KN-M)	TENSILE STRAIN (PCT)	BENDING STRAIN (PCT)	TOTAL STRAIN (PCT)	PERCNT ALLOW (PCT)
61	SAGBEND	-199.32	-37.48	1.45	300.65	0.000	0.000	339.39	0.00	0.0000	0.0000	0.0000	0.00
62	SAGBEND	-205.36	-37.63	1.44	306.70	0.000	0.000	339.39	0.00	0.0000	0.0000	0.0000	0.00
63	SAGBEND	-211.41	-37.78	1.44	312.75	0.000	0.000	339.39	0.00	0.0000	0.0000	0.0000	0.00
64	SAGBEND	-217.46	-37.93	1.44	318.80	0.000	0.000	339.39	0.00	0.0000	0.0000	0.0000	0.00
65	SAGBEND	-223.51	-38.09	1.43	324.85	0.000	0.000	339.39	0.00	0.0000	0.0000	0.0000	0.00
66	SAGBEND	-229.55	-38.24	1.43	330.90	0.000	0.000	339.39	0.00	0.0000	0.0000	0.0000	0.00
67	SAGBEND	-235.60	-38.39	1.43	336.95	0.000	0.000	339.39	0.00	0.0000	0.0000	0.0000	0.00
68	SAGBEND	-241.65	-38.54	1.43	343.00	0.000	0.000	339.38	0.00	0.0000	0.0000	0.0000	0.00
69	SAGBEND	-247.70	-38.69	1.42	349.05	0.000	0.000	339.38	0.00	0.0000	0.0000	0.0000	0.00
70	SAGBEND	-253.75	-38.84	1.42	355.10	0.000	0.000	339.38	0.00	0.0000	0.0000	0.0000	0.00
71	SAGBEND	-259.79	-38.99	1.42	361.15	0.000	0.000	339.38	0.00	0.0000	0.0000	0.0000	0.00
72	SAGBEND	-265.84	-39.14	1.42	367.20	0.000	0.000	339.38	0.00	0.0000	0.0000	0.0000	0.00
73	SAGBEND	-271.89	-39.29	1.41	373.25	0.000	0.000	339.38	0.00	0.0000	0.0000	0.0000	0.00
74	SAGBEND	-277.94	-39.44	1.41	379.30	0.000	0.000	339.38	0.00	0.0000	0.0000	0.0000	0.00
75	SAGBEND	-283.99	-39.59	1.41	385.35	0.000	0.000	339.38	0.00	0.0000	0.0000	0.0000	0.00
76	SAGBEND	-290.03	-39.74	1.41	391.40	0.000	0.000	339.38	0.00	0.0000	0.0000	0.0000	0.00
77	SAGBEND	-296.08	-39.88	1.40	397.45	0.000	0.000	339.38	0.00	0.0000	0.0000	0.0000	0.00
78	SAGBEND	-302.13	-40.03	1.40	403.50	0.000	0.000	339.38	0.00	0.0000	0.0000	0.0000	0.00
79	SAGBEND	-308.18	-40.18	1.40	409.55	0.000	0.000	339.38	0.00	0.0000	0.0000	0.0000	0.00
80	SAGBEND	-314.22	-40.33	1.39	415.60	0.000	0.000	339.38	0.00	0.0000	0.0000	0.0000	0.00
81	SAGBEND	-320.27	-40.47	1.39	421.65	0.000	0.000	339.38	0.00	0.0000	0.0000	0.0000	0.00
82	SAGBEND	-326.32	-40.62	1.39	427.70	0.000	0.000	339.38	0.00	0.0000	0.0000	0.0000	0.00
83	SAGBEND	-332.37	-40.77	1.39	433.75	0.000	0.000	339.38	0.00	0.0000	0.0000	0.0000	0.00
84	SAGBEND	-338.42	-40.91	1.38	439.80	0.000	0.000	339.38	0.00	0.0000	0.0000	0.0000	0.00
85	SAGBEND	-344.46	-41.06	1.38	445.85	0.000	0.000	339.38	0.00	0.0000	0.0000	0.0000	0.00
86	SAGBEND	-350.51	-41.21	1.38	451.89	0.000	0.000	339.38	0.00	0.0000	0.0000	0.0000	0.00
87	SAGBEND	-356.56	-41.35	1.38	457.94	0.000	0.000	339.38	0.00	0.0000	0.0000	0.0000	0.00
88	SAGBEND	-362.61	-41.50	1.37	463.99	0.000	0.000	339.38	0.00	0.0000	0.0000	0.0000	0.00
89	SAGBEND	-365.66	-41.57	1.37	467.05	0.000	0.000	339.38	0.00	0.0000	0.0000	0.0000	0.00
90	SAGBEND	-368.71	-41.64	1.37	470.10	0.000	0.000	339.38	0.00	0.0000	0.0000	0.0000	0.00
91	SAGBEND	-374.70	-41.78	1.28	476.09	0.000	0.000	339.36	0.00	0.0000	0.0000	0.0000	0.00
92	SAGBEND	-380.75	-41.91	1.18	482.14	0.000	0.000	339.35	0.00	0.0000	0.0000	0.0000	0.00
93	SAGBEND	-386.80	-42.03	1.08	488.19	0.000	0.000	339.34	0.00	0.0000	0.0000	0.0000	0.00
94	SAGBEND	-392.85	-42.14	0.99	494.24	0.000	0.000	339.33	0.00	0.0000	0.0000	0.0000	0.00
95	SAGBEND	-398.90	-42.24	0.89	500.29	0.000	0.000	339.32	0.00	0.0000	0.0000	0.0000	0.00
96	SAGBEND	-404.95	-42.33	0.79	506.34	0.000	0.000	339.31	0.00	0.0000	0.0000	0.0000	0.00
97	SAGBEND	-411.00	-42.41	0.70	512.39	0.000	0.000	339.30	0.00	0.0000	0.0000	0.0000	0.00
98	SAGBEND	-417.04	-42.47	0.60	518.44	0.000	0.000	339.30	0.00	0.0000	0.0000	0.0000	0.00
99	SAGBEND	-423.09	-42.53	0.50	524.49	0.000	0.000	339.29	0.00	0.0000	0.0000	0.0000	0.00
100	SAGBEND	-429.14	-42.58	0.41	530.54	0.000	0.000	339.29	0.00	0.0000	0.0000	0.0000	0.00
101	SAGBEND	-435.19	-42.62	0.31	536.59	0.000	0.000	339.28	0.00	0.0000	0.0000	0.0000	0.00
102	SAGBEND	-441.24	-42.65	0.22	542.64	0.000	0.000	339.28	0.00	0.0000	0.0000	0.0000	0.00
103	SAGBEND	-447.29	-42.66	0.12	548.69	0.003	0.000	339.28	0.00	0.0000	0.0000	0.0000	0.00
104	SEABED	-453.34	-42.67	0.03	554.74	0.231	0.000	339.28	0.00	0.0000	0.0000	0.0000	0.00

S T A T I C P I P E C O O R D I N A T E S, F O R C E S A N D S T R A I N S

NODE NO.	PIPE SECTION	X COORD (M)	Y COORD (M)	VERT ANGLE (DEG)	PIPE LENGTH (M)	SUPPORT REACTION (KN)	SEPARA -TION (M)	AXIAL TENSION (KN)	BENDING MOMENT (KN-M)	TENSILE STRAIN (PCT)	BENDING STRAIN (PCT)	TOTAL STRAIN (PCT)	PERCNT ALLOW (PCT)
105	SEABED	-459.39	-42.67	0.01	560.79	0.502	0.000	339.28	0.00	0.0000	0.0000	0.0000	0.00
106	SEABED	-465.44	-42.67	0.00	566.84	0.558	0.000	339.28	0.00	0.0000	0.0000	0.0000	0.00
107	SEABED	-471.49	-42.67	0.00	572.89	0.568	0.000	339.28	0.00	0.0000	0.0000	0.0000	0.00
108	SEABED	-477.54	-42.67	0.00	578.93	0.570	0.000	339.28	0.00	0.0000	0.0000	0.0000	0.00
109	SEABED	-483.59	-42.67	0.00	584.98	0.571	0.000	339.28	0.00	0.0000	0.0000	0.0000	0.00
110	SEABED	-489.64	-42.67	0.00	591.03	0.571	0.000	339.28	0.00	0.0000	0.0000	0.0000	0.00
111	SEABED	-495.69	-42.67	0.00	597.08	0.571	0.000	339.28	0.00	0.0000	0.0000	0.0000	0.00
112	SEABED	-501.74	-42.67	0.00	603.13	0.571	0.000	339.28	0.00	0.0000	0.0000	0.0000	0.00
113	SEABED	-507.79	-42.67	0.00	609.18	0.571	0.000	339.28	0.00	0.0000	0.0000	0.0000	0.00
114	SEABED	-513.84	-42.67	0.00	615.23	0.571	0.000	339.28	0.00	0.0000	0.0000	0.0000	0.00
115	SEABED	-519.89	-42.67	0.00	621.28	0.571	0.000	339.28	0.00	0.0000	0.0000	0.0000	0.00
116	SEABED	-525.93	-42.67	0.00	627.33	0.571	0.000	339.28	0.00	0.0000	0.0000	0.0000	0.00
117	SEABED	-531.98	-42.67	0.00	633.38	0.571	0.000	339.28	0.00	0.0000	0.0000	0.0000	0.00
118	SEABED	-538.03	-42.67	0.00	639.43	0.571	0.000	339.28	0.00	0.0000	0.0000	0.0000	0.00
119	SEABED	-544.08	-42.67	0.00	645.48	0.571	0.000	339.28	0.00	0.0000	0.0000	0.0000	0.00
120	SEABED	-550.13	-42.67	0.00	651.53	0.571	0.000	339.28	0.00	0.0000	0.0000	0.0000	0.00
121	SEABED	-556.18	-42.67	0.00	657.58	0.571	0.000	339.28	0.00	0.0000	0.0000	0.0000	0.00
122	SEABED	-562.23	-42.67	0.00	663.63	0.571	0.000	339.28	0.00	0.0000	0.0000	0.0000	0.00

123	SEABED	-568.28	-42.67	0.00	669.68	0.571	0.000	339.28	0.00	0.0000	0.0000	0.0000	0.00
124	SEABED	-574.33	-42.67	0.00	675.73	0.571	0.000	339.28	0.00	0.0000	0.0000	0.0000	0.00
125	SEABED	-580.38	-42.67	0.00	681.78	0.571	0.000	339.28	0.00	0.0000	0.0000	0.0000	0.00
126	SEABED	-586.43	-42.67	0.00	687.83	0.571	0.000	339.28	0.00	0.0000	0.0000	0.0000	0.00
127	SEABED	-592.48	-42.67	0.00	693.88	0.571	0.000	339.28	0.00	0.0000	0.0000	0.0000	0.00
128	SEABED	-598.53	-42.67	0.00	699.92	0.571	0.000	339.28	0.00	0.0000	0.0000	0.0000	0.00
129	SEABED	-604.58	-42.67	0.00	705.97	0.571	0.000	339.28	0.00	0.0000	0.0000	0.0000	0.00
130	SEABED	-610.63	-42.67	0.00	712.02	0.571	0.000	339.28	0.00	0.0000	0.0000	0.0000	0.00
131	SEABED	-616.68	-42.67	0.00	718.07	0.571	0.000	339.28	0.00	0.0000	0.0000	0.0000	0.00
132	SEABED	-622.73	-42.67	0.00	724.12	0.571	0.000	339.28	0.00	0.0000	0.0000	0.0000	0.00
133	SEABED	-628.78	-42.67	0.00	730.17	0.571	0.000	339.28	0.00	0.0000	0.0000	0.0000	0.00
134	SEABED	-634.83	-42.67	0.00	736.22	0.571	0.000	339.28	0.00	0.0000	0.0000	0.0000	0.00
135	SEABED	-640.87	-42.67	0.00	742.27	0.571	0.000	339.28	0.00	0.0000	0.0000	0.0000	0.00
136	SEABED	-646.92	-42.67	0.00	748.32	0.571	0.000	339.28	0.00	0.0000	0.0000	0.0000	0.00
137	SEABED	-652.97	-42.67	0.00	754.37	0.571	0.000	339.28	0.00	0.0000	0.0000	0.0000	0.00
138	SEABED	-659.02	-42.67	0.00	760.42	0.571	0.000	339.28	0.00	0.0000	0.0000	0.0000	0.00
139	SEABED	-665.07	-42.67	0.00	766.47	0.571	0.000	339.28	0.00	0.0000	0.0000	0.0000	0.00
140	SEABED	-671.12	-42.67	0.00	772.52	0.571	0.000	339.28	0.00	0.0000	0.0000	0.0000	0.00
141	SEABED	-677.17	-42.67	0.00	778.57	0.571	0.000	339.28	0.00	0.0000	0.0000	0.0000	0.00
142	SEABED	-683.22	-42.67	0.00	784.62	0.571	0.000	339.28	0.00	0.0000	0.0000	0.0000	0.00
143	SEABED	-689.27	-42.67	0.00	790.67	0.571	0.000	339.28	0.00	0.0000	0.0000	0.0000	0.00
144	SEABED	-695.32	-42.67	0.00	796.72	0.571	0.000	339.28	0.00	0.0000	0.0000	0.0000	0.00
145	SEABED	-701.37	-42.67	0.00	802.77	0.571	0.000	339.28	0.00	0.0000	0.0000	0.0000	0.00
146	SEABED	-707.42	-42.67	0.00	808.82	0.571	0.000	339.28	0.00	0.0000	0.0000	0.0000	0.00
147	SEABED	-713.47	-42.67	0.00	814.86	0.571	0.000	339.28	0.00	0.0000	0.0000	0.0000	0.00
148	SEABED	-719.52	-42.67	0.00	820.91	0.571	0.000	339.28	0.00	0.0000	0.0000	0.0000	0.00
149	SEABED	-725.57	-42.67	0.00	826.96	0.571	0.000	339.28	0.00	0.0000	0.0000	0.0000	0.00

S T A T I C P I P E C O O R D I N A T E S, F O R C E S A N D S T R A I N S

NODE NO.	PIPE SECTION	X COORD (M)	Y COORD (M)	VERT ANGLE (DEG)	PIPE LENGTH (M)	SUPPORT REACTION (KN)	SEPARA -TION (M)	AXIAL TENSION (KN)	BENDING MOMENT (KN-M)	TENSILE STRAIN (PCT)	BENDING STRAIN (PCT)	TOTAL STRAIN (PCT)	PERCNT ALLOW (PCT)
150	SEABED	-731.62	-42.67	0.00	833.01	0.571	0.000	339.28	0.00	0.0000	0.0000	0.0000	0.00
151	SEABED	-737.67	-42.67	0.00	839.06	0.571	0.000	339.28	0.00	0.0000	0.0000	0.0000	0.00
152	SEABED	-743.72	-42.67	0.00	845.11	0.570	0.000	339.28	0.00	0.0000	0.0000	0.0000	0.00
153	SEABED	-749.77	-42.67	0.00	851.16	0.567	0.000	339.28	0.00	0.0000	0.0000	0.0000	0.00
154	SEABED	-755.82	-42.67	0.00	857.21	0.553	0.000	339.28	0.00	0.0000	0.0000	0.0000	0.00
155	SEABED	-761.86	-42.67	-0.01	863.26	0.388	0.000	339.28	0.00	0.0000	0.0000	0.0000	0.00
156	SEABED	-765.27	-42.67	-0.02	866.66	0.191	0.000	339.28	0.00	0.0000	0.0000	0.0000	0.00
157	SEABED	-768.67	-42.67	-0.06	870.07	0.000	0.000	339.28	0.00	0.0000	0.0000	0.0000	0.00

S T A T I C P I P E C O O R D I N A T E S, F O R C E S A N D S T R A I N S

NODE NO.	PIPE SECTION	X COORD (M)	Y COORD (M)	VERT ANGLE (DEG)	PIPE LENGTH (M)	SUPPORT REACTION (KN)	SEPARA -TION (M)	AXIAL TENSION (KN)	BENDING MOMENT (KN-M)	TENSILE STRAIN (PCT)	BENDING STRAIN (PCT)	TOTAL STRAIN (PCT)	PERCNT ALLOW (PCT)
1	LAYBARGE	96.31	6.41	1.93	0.00	9.934	0.000	0.00	2.74	0.0000	0.0021	0.0021	0.00
3	LAYBARGE	84.28	6.05	1.58	12.04	24.131	0.000	-0.73	-19.18	0.0000	-0.0143	0.0144	0.00
5	LAYBARGE	73.45	5.73	1.90	22.87	24.443	0.000	-1.39	-29.54	-0.0001	-0.0221	0.0222	0.00
7	TENSIONR	60.10	5.24	2.30	36.23	32.200	0.000	386.42	-22.77	0.0180	-0.0170	0.0350	0.00
9	LAYBARGE	51.10	4.87	2.21	45.24	0.000	0.000	385.70	28.51	0.0179	0.0213	0.0393	0.00
10	LAYBARGE	46.45	4.70	1.92	49.89	6.394	0.000	385.38	16.18	0.0179	0.0121	0.0300	0.00
12	LAYBARGE	35.36	4.31	2.69	60.99	45.770	0.000	384.29	-85.70	0.0179	-0.0641	0.0820	0.00
14	LAYBARGE	25.34	3.64	5.00	71.03	39.751	0.000	382.94	-107.85	0.0178	-0.0807	0.0985	0.00
16	LAYBARGE	19.31	3.04	6.14	77.09	0.000	0.000	382.00	-48.46	0.0178	-0.0362	0.0540	0.00
17	LAYBARGE	8.88	1.76	8.56	87.60	71.180	0.000	378.62	-176.32	0.0176	-0.1341	0.1517	0.00
19	LAYBARGE	4.90	1.10	9.96	91.63	0.000	0.000	378.00	-85.80	0.0176	-0.0642	0.0818	0.00
20	LAYBARGE	3.08	0.78	10.29	93.48	0.000	0.158	377.44	-55.69	0.0176	-0.0417	0.0592	0.00
24	STINGER	-7.61	-1.23	10.82	104.36	0.000	0.194	374.72	-15.16	0.0174	-0.0113	0.0288	0.00
26	STINGER	-16.57	-3.02	12.17	113.50	33.945	0.000	372.57	-127.46	0.0172	-0.0953	0.1127	0.00
29	STINGER	-26.19	-5.35	15.17	123.39	31.958	0.000	370.07	-155.50	0.0171	-0.1165	0.1337	0.00
31	STINGER	-36.64	-8.56	19.10	134.33	53.179	0.000	366.60	-189.66	0.0168	-0.1502	0.1672	0.00
33	STINGER	-39.48	-9.57	20.25	137.34	0.000	0.311	366.12	-111.06	0.0168	-0.0831	0.1001	0.00
35	SAGBEND	-45.10	-11.71	21.18	143.35	0.000	0.000	364.25	-20.75	0.0166	-0.0155	0.0325	0.00
36	SAGBEND	-50.74	-13.90	21.13	149.40	0.000	0.000	362.06	21.53	0.0165	0.0161	0.0329	0.00
37	SAGBEND	-56.39	-16.06	20.62	155.45	0.000	0.000	359.88	41.39	0.0163	0.0310	0.0477	0.00
38	SAGBEND	-62.06	-18.15	19.90	161.50	0.000	0.000	357.77	50.92	0.0161	0.0381	0.0547	0.00
39	SAGBEND	-67.77	-20.17	19.07	167.55	0.000	0.000	355.74	55.69	0.0160	0.0417	0.0582	0.00
40	SAGBEND	-73.50	-22.11	18.18	173.60	0.000	0.000	353.80	58.24	0.0159	0.0436	0.0600	0.00
41	SAGBEND	-79.26	-23.95	17.27	179.65	0.000	0.000	351.96	59.75	0.0157	0.0447	0.0610	0.00
42	SAGBEND	-85.05	-25.70	16.33	185.70	0.000	0.000	350.21	60.77	0.0156	0.0454	0.0617	0.00
43	SAGBEND	-90.87	-27.35	15.38	191.75	0.000	0.000	348.55	61.54	0.0155	0.0460	0.0622	0.00
44	SAGBEND	-96.72	-28.91	14.42	197.80	0.000	0.000	347.00	62.18	0.0153	0.0465	0.0626	0.00
45	SAGBEND	-102.59	-30.36	13.45	203.85	0.000	0.000	345.54	62.74	0.0152	0.0469	0.0630	0.00
46	SAGBEND	-108.49	-31.72	12.48	209.90	0.000	0.000	344.18	63.25	0.0151	0.0473	0.0633	0.00
47	SAGBEND	-114.41	-32.98	11.49	215.95	0.000	0.000	342.93	63.70	0.0150	0.0476	0.0636	0.00
48	SAGBEND	-120.34	-34.13	10.50	222.00	0.000	0.000	341.77	64.11	0.0150	0.0479	0.0638	0.00
49	SAGBEND	-126.30	-35.18	9.50	228.05	0.000	0.000	340.72	64.45	0.0149	0.0482	0.0640	0.00
50	SAGBEND	-132.28	-36.13	8.50	234.10	0.000	0.000	339.78	64.68	0.0148	0.0484	0.0642	0.00
51	SAGBEND	-138.27	-36.97	7.50	240.15	0.000	0.000	338.94	64.74	0.0148	0.0484	0.0642	0.00
52	SAGBEND	-144.27	-37.71	6.50	246.20	0.000	0.000	338.20	64.48	0.0147	0.0482	0.0639	0.00
53	SAGBEND	-150.29	-38.34	5.50	252.25	0.000	0.000	337.57	63.58	0.0147	0.0476	0.0632	0.00
54	SAGBEND	-156.32	-38.87	4.53	258.30	0.000	0.000	337.05	61.39	0.0146	0.0459	0.0616	0.00
55	SAGBEND	-162.35	-39.30	3.61	264.35	0.000	0.000	336.63	56.51	0.0146	0.0423	0.0579	0.00
56	SAGBEND	-168.39	-39.63	2.81	270.40	0.000	0.000	336.32	46.06	0.0146	0.0344	0.0501	0.00
57	SAGBEND	-174.44	-39.90	2.24	276.45	0.000	0.000	336.09	23.95	0.0145	0.0179	0.0335	0.00
58	SAGBEND	-178.09	-40.04	2.12	280.11	0.000	0.000	335.97	0.00	0.0145	0.0000	0.0157	0.00
59	SAGBEND	-182.31	-40.09	0.73	284.33	0.000	0.000	336.07	0.00	0.0000	0.0000	0.0000	0.00
60	SAGBEND	-186.53	-40.14	0.73	288.55	0.000	0.000	336.07	0.00	0.0000	0.0000	0.0000	0.00

S T A T I C P I P E C O O R D I N A T E S, F O R C E S A N D S T R A I N S

NODE NO.	PIPE SECTION	X COORD (M)	Y COORD (M)	VERT ANGLE (DEG)	PIPE LENGTH (M)	SUPPORT REACTION (KN)	SEPARA -TION (M)	AXIAL TENSION (KN)	BENDING MOMENT (KN-M)	TENSILE STRAIN (PCT)	BENDING STRAIN (PCT)	TOTAL STRAIN (PCT)	PERCNT ALLOW (PCT)
61	SAGBEND	-192.58	-40.22	0.73	294.60	0.000	0.000	336.07	0.00	0.0000	0.0000	0.0000	0.00
62	SAGBEND	-198.63	-40.30	0.73	300.65	0.000	0.000	336.07	0.00	0.0000	0.0000	0.0000	0.00
63	SAGBEND	-204.68	-40.37	0.72	306.70	0.000	0.000	336.07	0.00	0.0000	0.0000	0.0000	0.00
64	SAGBEND	-210.73	-40.45	0.72	312.75	0.000	0.000	336.07	0.00	0.0000	0.0000	0.0000	0.00
65	SAGBEND	-216.78	-40.53	0.72	318.80	0.000	0.000	336.07	0.00	0.0000	0.0000	0.0000	0.00
66	SAGBEND	-222.83	-40.60	0.72	324.85	0.000	0.000	336.07	0.00	0.0000	0.0000	0.0000	0.00
67	SAGBEND	-228.88	-40.68	0.71	330.90	0.000	0.000	336.07	0.00	0.0000	0.0000	0.0000	0.00
68	SAGBEND	-234.93	-40.75	0.71	336.95	0.000	0.000	336.06	0.00	0.0000	0.0000	0.0000	0.00
69	SAGBEND	-240.97	-40.83	0.71	343.00	0.000	0.000	336.06	0.00	0.0000	0.0000	0.0000	0.00
70	SAGBEND	-247.02	-40.90	0.70	349.05	0.000	0.000	336.06	0.00	0.0000	0.0000	0.0000	0.00
71	SAGBEND	-253.07	-40.98	0.70	355.10	0.000	0.000	336.06	0.00	0.0000	0.0000	0.0000	0.00
72	SAGBEND	-259.12	-41.05	0.70	361.15	0.000	0.000	336.06	0.00	0.0000	0.0000	0.0000	0.00
73	SAGBEND	-265.17	-41.12	0.70	367.20	0.000	0.000	336.06	0.00	0.0000	0.0000	0.0000	0.00
74	SAGBEND	-271.22	-41.20	0.69	373.25	0.000	0.000	336.06	0.00	0.0000	0.0000	0.0000	0.00
75	SAGBEND	-277.27	-41.27	0.69	379.30	0.000	0.000	336.06	0.00	0.0000	0.0000	0.0000	0.00
76	SAGBEND	-283.32	-41.34	0.69	385.35	0.000	0.000	336.06	0.00	0.0000	0.0000	0.0000	0.00
77	SAGBEND	-289.37	-41.41	0.69	391.40	0.000	0.000	336.06	0.00	0.0000	0.0000	0.0000	0.00
78	SAGBEND	-295.42	-41.49	0.68	397.45	0.000	0.000	336.06	0.00	0.0000	0.0000	0.0000	0.00
79	SAGBEND	-301.47	-41.56	0.68	403.50	0.000	0.000	336.06	0.00	0.0000	0.0000	0.0000	0.00
80	SAGBEND	-307.52	-41.63	0.68	409.55	0.000	0.000	336.06	0.00	0.0000	0.0000	0.0000	0.00
81	SAGBEND	-313.57	-41.70	0.67	415.60	0.000	0.000	336.06	0.00	0.0000	0.0000	0.0000	0.00
82	SAGBEND	-319.61	-41.77	0.67	421.65	0.000	0.000	336.06	0.00	0.0000	0.0000	0.0000	0.00
83	SAGBEND	-325.66	-41.84	0.67	427.69	0.000	0.000	336.06	0.00	0.0000	0.0000	0.0000	0.00
84	SAGBEND	-331.71	-41.91	0.67	433.74	0.000	0.000	336.06	0.00	0.0000	0.0000	0.0000	0.00
85	SAGBEND	-337.76	-41.98	0.66	439.79	0.000	0.000	336.06	0.00	0.0000	0.0000	0.0000	0.00
86	SAGBEND	-343.81	-42.05	0.66	445.84	0.000	0.000	336.06	0.00	0.0000	0.0000	0.0000	0.00
87	SAGBEND	-349.86	-42.12	0.66	451.89	0.000	0.000	336.06	0.00	0.0000	0.0000	0.0000	0.00
88	SAGBEND	-355.91	-42.19	0.66	457.94	0.000	0.000	336.06	0.00	0.0000	0.0000	0.0000	0.00
89	SAGBEND	-361.96	-42.26	0.65	463.99	0.000	0.000	336.06	0.00	0.0000	0.0000	0.0000	0.00
90	SAGBEND	-368.01	-42.33	0.65	470.04	0.000	0.000	336.06	0.00	0.0000	0.0000	0.0000	0.00
91	SAGBEND	-374.06	-42.40	0.65	476.09	0.000	0.000	336.06	0.00	0.0000	0.0000	0.0000	0.00
92	SAGBEND	-378.06	-42.45	0.65	480.10	0.000	0.000	336.06	0.00	0.0000	0.0000	0.0000	0.00
93	SAGBEND	-382.11	-42.49	0.58	484.14	0.000	0.000	336.06	0.00	0.0000	0.0000	0.0000	0.00
94	SAGBEND	-386.16	-42.53	0.52	488.19	0.000	0.000	336.05	0.00	0.0000	0.0000	0.0000	0.00
95	SAGBEND	-392.20	-42.58	0.42	494.24	0.000	0.000	336.05	0.00	0.0000	0.0000	0.0000	0.00
96	SAGBEND	-398.25	-42.62	0.32	500.29	0.000	0.000	336.04	0.00	0.0000	0.0000	0.0000	0.00
97	SAGBEND	-404.30	-42.64	0.22	506.34	0.000	0.000	336.04	0.00	0.0000	0.0000	0.0000	0.00
98	SAGBEND	-410.35	-42.66	0.13	512.39	0.001	0.000	336.04	0.00	0.0000	0.0000	0.0000	0.00
99	SEABED	-416.40	-42.67	0.03	518.44	0.205	0.000	336.04	0.00	0.0000	0.0000	0.0000	0.00
100	SEABED	-422.45	-42.67	0.01	524.49	0.494	0.000	336.04	0.00	0.0000	0.0000	0.0000	0.00
101	SEABED	-428.50	-42.67	0.00	530.54	0.557	0.000	336.04	0.00	0.0000	0.0000	0.0000	0.00
102	SEABED	-434.55	-42.67	0.00	536.59	0.568	0.000	336.04	0.00	0.0000	0.0000	0.0000	0.00
103	SEABED	-440.60	-42.67	0.00	542.63	0.570	0.000	336.04	0.00	0.0000	0.0000	0.0000	0.00
104	SEABED	-446.65	-42.67	0.00	548.68	0.571	0.000	336.04	0.00	0.0000	0.0000	0.0000	0.00

S T A T I C P I P E C O O R D I N A T E S, F O R C E S A N D S T R A I N S

NODE NO.	PIPE SECTION	X COORD (M)	Y COORD (M)	VERT ANGLE (DEG)	PIPE LENGTH (M)	SUPPORT REACTION (KN)	SEPARA -TION (M)	AXIAL TENSION (KN)	BENDING MOMENT (KN-M)	TENSILE STRAIN (PCT)	BENDING STRAIN (PCT)	TOTAL STRAIN (PCT)	PERCNT ALLOW (PCT)
105	SEABED	-452.70	-42.67	0.00	554.73	0.571	0.000	336.04	0.00	0.0000	0.0000	0.0000	0.00
106	SEABED	-458.75	-42.67	0.00	560.78	0.571	0.000	336.04	0.00	0.0000	0.0000	0.0000	0.00
107	SEABED	-464.80	-42.67	0.00	566.83	0.571	0.000	336.04	0.00	0.0000	0.0000	0.0000	0.00
108	SEABED	-470.85	-42.67	0.00	572.88	0.571	0.000	336.04	0.00	0.0000	0.0000	0.0000	0.00
109	SEABED	-476.90	-42.67	0.00	578.93	0.571	0.000	336.04	0.00	0.0000	0.0000	0.0000	0.00
110	SEABED	-482.94	-42.67	0.00	584.98	0.571	0.000	336.04	0.00	0.0000	0.0000	0.0000	0.00
111	SEABED	-488.99	-42.67	0.00	591.03	0.571	0.000	336.04	0.00	0.0000	0.0000	0.0000	0.00
112	SEABED	-495.04	-42.67	0.00	597.08	0.571	0.000	336.04	0.00	0.0000	0.0000	0.0000	0.00
113	SEABED	-501.09	-42.67	0.00	603.13	0.571	0.000	336.04	0.00	0.0000	0.0000	0.0000	0.00
114	SEABED	-507.14	-42.67	0.00	609.18	0.571	0.000	336.04	0.00	0.0000	0.0000	0.0000	0.00
115	SEABED	-513.19	-42.67	0.00	615.23	0.571	0.000	336.04	0.00	0.0000	0.0000	0.0000	0.00
116	SEABED	-519.24	-42.67	0.00	621.28	0.571	0.000	336.04	0.00	0.0000	0.0000	0.0000	0.00
117	SEABED	-525.29	-42.67	0.00	627.33	0.571	0.000	336.04	0.00	0.0000	0.0000	0.0000	0.00
118	SEABED	-531.34	-42.67	0.00	633.38	0.571	0.000	336.04	0.00	0.0000	0.0000	0.0000	0.00
119	SEABED	-537.39	-42.67	0.00	639.42	0.571	0.000	336.04	0.00	0.0000	0.0000	0.0000	0.00
120	SEABED	-543.44	-42.67	0.00	645.47	0.571	0.000	336.04	0.00	0.0000	0.0000	0.0000	0.00
121	SEABED	-549.49	-42.67	0.00	651.52	0.571	0.000	336.04	0.00	0.0000	0.0000	0.0000	0.00
122	SEABED	-555.54	-42.67	0.00	657.57	0.571	0.000	336.04	0.00	0.0000	0.0000	0.0000	0.00
123	SEABED	-561.59	-42.67	0.00	663.62	0.571	0.000	336.04	0.00	0.0000	0.0000	0.0000	0.00
124	SEABED	-567.64	-42.67	0.00	669.67	0.571	0.000	336.04	0.00	0.0000	0.0000	0.0000	0.00
125	SEABED	-573.69	-42.67	0.00	675.72	0.571	0.000	336.04	0.00	0.0000	0.0000	0.0000	0.00
126	SEABED	-579.73	-42.67	0.00	681.77	0.571	0.000	336.04	0.00	0.0000	0.0000	0.0000	0.00
127	SEABED	-585.78	-42.67	0.00	687.82	0.571	0.000	336.04	0.00	0.0000	0.0000	0.0000	0.00
128	SEABED	-591.83	-42.67	0.00	693.87	0.571	0.000	336.04	0.00	0.0000	0.0000	0.0000	0.00
129	SEABED	-597.88	-42.67	0.00	699.92	0.571	0.000	336.04	0.00	0.0000	0.0000	0.0000	0.00
130	SEABED	-603.93	-42.67	0.00	705.97	0.571	0.000	336.04	0.00	0.0000	0.0000	0.0000	0.00
131	SEABED	-609.98	-42.67	0.00	712.02	0.571	0.000	336.04	0.00	0.0000	0.0000	0.0000	0.00
132	SEABED	-616.03	-42.67	0.00	718.07	0.571	0.000	336.04	0.00	0.0000	0.0000	0.0000	0.00
133	SEABED	-622.08	-42.67	0.00	724.12	0.571	0.000	336.04	0.00	0.0000	0.0000	0.0000	0.00
134	SEABED	-628.13	-42.67	0.00	730.17	0.571	0.000	336.04	0.00	0.0000	0.0000	0.0000	0.00
135	SEABED	-634.18	-42.67	0.00	736.21	0.571	0.000	336.04	0.00	0.0000	0.0000	0.0000	0.00
136	SEABED	-640.23	-42.67	0.00	742.26	0.571	0.000	336.04	0.00	0.0000	0.0000	0.0000	0.00
137	SEABED	-646.28	-42.67	0.00	748.31	0.571	0.000	336.04	0.00	0.0000	0.0000	0.0000	0.00
138	SEABED	-652.33	-42.67	0.00	754.36	0.571	0.000	336.04	0.00	0.0000	0.0000	0.0000	0.00
139	SEABED	-658.38	-42.67	0.00	760.41	0.571	0.000	336.04	0.00	0.0000	0.0000	0.0000	0.00
140	SEABED	-664.43	-42.67	0.00	766.46	0.571	0.000	336.04	0.00	0.0000	0.0000	0.0000	0.00
141	SEABED	-670.48	-42.67	0.00	772.51	0.571	0.000	336.04	0.00	0.0000	0.0000	0.0000	0.00
142	SEABED	-676.53	-42.67	0.00	778.56	0.571	0.000	336.04	0.00	0.0000	0.0000	0.0000	0.00
143	SEABED	-682.57	-42.67	0.00	784.61	0.571	0.000	336.04	0.00	0.0000	0.0000	0.0000	0.00
144	SEABED	-688.62	-42.67	0.00	790.66	0.571	0.000	336.04	0.00	0.0000	0.0000	0.0000	0.00
145	SEABED	-694.67	-42.67	0.00	796.71	0.571	0.000	336.04	0.00	0.0000	0.0000	0.0000	0.00
146	SEABED	-700.72	-42.67	0.00	802.76	0.571	0.000	336.04	0.00	0.0000	0.0000	0.0000	0.00
147	SEABED	-706.77	-42.67	0.00	808.81	0.571	0.000	336.04	0.00	0.0000	0.0000	0.0000	0.00
148	SEABED	-712.82	-42.67	0.00	814.86	0.571	0.000	336.04	0.00	0.0000	0.0000	0.0000	0.00
149	SEABED	-718.87	-42.67	0.00	820.91	0.571	0.000	336.04	0.00	0.0000	0.0000	0.0000	0.00

INITIATION STRESS HEADING 45°

S T A T I C P I P E C O O R D I N A T E S, F O R C E S A N D S T R E S S E S

NODE NO.	PIPE SECTION	X COORD (M)	Y COORD (M)	VERT ANGLE (DEG)	PIPE LENGTH (M)	SUPPORT REACTION (KN)	SEPARA -TION (M)	AXIAL TENSION (KN)	BENDING MOMENT (KN-M)	TENSILE STRESS (MPA)	BENDING STRESS (MPA)	TOTAL STRESS (MPA)	PERCNT YIELD (PCT)
1	LAYBARGE	96.31	6.41	1.93	0.00	9.930	0.000	0.00	2.74	0.00	4.25	4.25	1.18
3	LAYBARGE	84.28	6.05	1.58	12.04	24.162	0.000	-0.73	-19.23	-0.07	-29.76	29.83	8.29
5	LAYBARGE	73.45	5.73	1.90	22.87	24.342	0.000	-1.39	-29.34	-0.13	-45.42	45.55	12.65
7	TENSIONR	60.11	5.24	2.31	36.23	32.025	0.000	70.92	-23.69	6.83	-36.67	43.50	12.08
9	LAYBARGE	51.10	4.87	2.20	45.24	0.000	0.000	70.19	30.21	6.76	46.76	53.52	14.87
10	LAYBARGE	46.45	4.70	1.92	49.89	10.916	0.000	69.87	11.60	6.73	17.97	24.69	6.86
12	LAYBARGE	35.36	4.31	2.57	60.99	40.261	0.000	68.89	-66.64	6.63	-103.17	109.81	30.50
14	LAYBARGE	23.33	3.62	3.64	73.04	16.532	0.000	67.70	-19.49	6.52	-30.18	36.70	10.19
16	LAYBARGE	19.25	3.36	3.74	77.13	0.000	0.000	67.18	0.00	6.47	0.00	6.47	1.80
17	LAYBARGE	8.84	2.43	5.04	87.58	0.000	0.669	67.18	0.00	0.00	0.00	0.00	0.00
19	LAYBARGE	4.82	2.08	4.93	91.62	0.000	0.000	67.17	0.00	0.00	0.00	0.00	0.00
20	LAYBARGE	3.01	1.92	4.83	93.44	0.000	1.305	67.16	0.00	0.00	0.00	0.00	0.00
24	STINGER	-7.53	1.04	4.65	104.01	0.000	1.309	67.14	0.00	0.00	0.00	0.00	0.00
26	STINGER	-16.59	0.32	4.46	113.10	0.000	0.306	67.12	0.00	0.00	0.00	0.00	0.00
29	STINGER	-26.48	-0.43	5.62	123.02	2.957	0.000	67.10	0.00	0.00	0.00	0.00	0.00
31	STINGER	-37.33	-1.74	9.05	133.95	5.191	0.000	67.06	0.00	0.00	0.00	0.00	0.00
33	STINGER	-40.30	-2.33	11.25	136.97	0.000	0.219	67.11	0.00	0.00	0.00	0.00	0.00
35	SAGBEND	-46.49	-3.56	11.23	143.29	0.000	0.000	67.10	0.00	0.00	0.00	0.00	0.00
36	SAGBEND	-52.42	-4.73	11.21	149.34	0.000	0.000	67.10	0.00	0.00	0.00	0.00	0.00
37	SAGBEND	-58.36	-5.91	11.20	155.39	0.000	0.000	67.10	0.00	0.00	0.00	0.00	0.00
38	SAGBEND	-64.29	-7.08	11.19	161.44	0.000	0.000	67.09	0.00	0.00	0.00	0.00	0.00
39	SAGBEND	-70.23	-8.26	11.17	167.49	0.000	0.000	67.09	0.00	0.00	0.00	0.00	0.00
40	SAGBEND	-76.16	-9.43	11.16	173.54	0.000	0.000	67.09	0.00	0.00	0.00	0.00	0.00
41	SAGBEND	-82.10	-10.60	11.15	179.59	0.000	0.000	67.09	0.00	0.00	0.00	0.00	0.00
42	SAGBEND	-88.04	-11.77	11.13	185.64	0.000	0.000	67.08	0.00	0.00	0.00	0.00	0.00
43	SAGBEND	-93.97	-12.94	11.12	191.69	0.000	0.000	67.08	0.00	0.00	0.00	0.00	0.00
44	SAGBEND	-99.91	-14.10	11.11	197.74	0.000	0.000	67.08	0.00	0.00	0.00	0.00	0.00
45	SAGBEND	-105.85	-15.27	11.09	203.79	0.000	0.000	67.07	0.00	0.00	0.00	0.00	0.00
46	SAGBEND	-111.78	-16.43	11.08	209.84	0.000	0.000	67.07	0.00	0.00	0.00	0.00	0.00
47	SAGBEND	-117.72	-17.59	11.07	215.89	0.000	0.000	67.07	0.00	0.00	0.00	0.00	0.00
48	SAGBEND	-123.66	-18.75	11.05	221.94	0.000	0.000	67.06	0.00	0.00	0.00	0.00	0.00
49	SAGBEND	-129.60	-19.91	11.04	227.99	0.000	0.000	67.06	0.00	0.00	0.00	0.00	0.00
50	SAGBEND	-135.53	-21.07	11.03	234.04	0.000	0.000	67.06	0.00	0.00	0.00	0.00	0.00
51	SAGBEND	-141.47	-22.23	11.01	240.09	0.000	0.000	67.06	0.00	0.00	0.00	0.00	0.00
52	SAGBEND	-147.41	-23.38	11.00	246.14	0.000	0.000	67.05	0.00	0.00	0.00	0.00	0.00
53	SAGBEND	-153.35	-24.53	10.99	252.19	0.000	0.000	67.05	0.00	0.00	0.00	0.00	0.00
54	SAGBEND	-159.29	-25.69	10.97	258.24	0.000	0.000	67.05	0.00	0.00	0.00	0.00	0.00
55	SAGBEND	-165.23	-26.84	10.96	264.29	0.000	0.000	67.04	0.00	0.00	0.00	0.00	0.00
56	SAGBEND	-171.17	-27.99	10.95	270.34	0.000	0.000	67.04	0.00	0.00	0.00	0.00	0.00
57	SAGBEND	-177.11	-29.13	10.93	276.39	0.000	0.000	67.04	0.00	0.00	0.00	0.00	0.00
58	SAGBEND	-180.67	-29.82	10.92	280.02	0.000	0.000	67.04	0.00	0.00	0.00	0.00	0.00
59	SAGBEND	-184.83	-30.61	10.59	284.25	0.000	0.000	66.96	0.00	0.00	0.00	0.00	0.00
60	SAGBEND	-189.00	-31.38	10.25	288.49	0.000	0.000	66.89	0.00	0.00	0.00	0.00	0.00

S T A T I C P I P E C O O R D I N A T E S, F O R C E S A N D S T R E S S E S

NODE NO.	PIPE SECTION	X COORD (M)	Y COORD (M)	VERT ANGLE (DEG)	PIPE LENGTH (M)	SUPPORT REACTION (KN)	SEPARA -TION (M)	AXIAL TENSION (KN)	BENDING MOMENT (KN-M)	TENSILE STRESS (MPA)	BENDING STRESS (MPA)	TOTAL STRESS (MPA)	PERCNT YIELD (PCT)
61	SAGBEND	-194.96	-32.43	9.77	294.54	0.000	0.000	66.79	0.00	0.00	0.00	0.00	0.00
62	SAGBEND	-200.92	-33.43	9.28	300.59	0.000	0.000	66.69	0.00	0.00	0.00	0.00	0.00
63	SAGBEND	-206.90	-34.38	8.80	306.64	0.000	0.000	66.60	0.00	0.00	0.00	0.00	0.00
64	SAGBEND	-212.88	-35.28	8.31	312.69	0.000	0.000	66.52	0.00	0.00	0.00	0.00	0.00
65	SAGBEND	-218.87	-36.13	7.82	318.74	0.000	0.000	66.44	0.00	0.00	0.00	0.00	0.00
66	SAGBEND	-224.87	-36.93	7.33	324.79	0.000	0.000	66.36	0.00	0.00	0.00	0.00	0.00
67	SAGBEND	-230.87	-37.68	6.84	330.84	0.000	0.000	66.29	0.00	0.00	0.00	0.00	0.00
68	SAGBEND	-236.88	-38.37	6.35	336.89	0.000	0.000	66.23	0.00	0.00	0.00	0.00	0.00
69	SAGBEND	-242.90	-39.02	5.86	342.94	0.000	0.000	66.17	0.00	0.00	0.00	0.00	0.00
70	SAGBEND	-248.92	-39.61	5.37	348.99	0.000	0.000	66.11	0.00	0.00	0.00	0.00	0.00
71	SAGBEND	-254.95	-40.15	4.87	355.04	0.000	0.000	66.06	0.00	0.00	0.00	0.00	0.00
72	SAGBEND	-260.98	-40.63	4.38	361.09	0.000	0.000	66.01	0.00	0.00	0.00	0.00	0.00
73	SAGBEND	-267.01	-41.07	3.88	367.14	0.000	0.000	65.97	0.00	0.00	0.00	0.00	0.00
74	SAGBEND	-273.05	-41.45	3.39	373.19	0.000	0.000	65.94	0.00	0.00	0.00	0.00	0.00
75	SAGBEND	-279.09	-41.79	2.89	379.24	0.000	0.000	65.90	0.00	0.00	0.00	0.00	0.00
76	SAGBEND	-285.13	-42.06	2.39	385.29	0.000	0.000	65.88	0.00	0.00	0.00	0.00	0.00
77	SAGBEND	-291.18	-42.29	1.90	391.34	0.000	0.000	65.86	0.00	0.00	0.00	0.00	0.00
78	SAGBEND	-297.23	-42.46	1.40	397.39	0.000	0.000	65.84	0.00	0.00	0.00	0.00	0.00
79	SAGBEND	-303.27	-42.59	0.90	403.44	0.000	0.000	65.83	0.00	0.00	0.00	0.00	0.00
80	SAGBEND	-309.32	-42.65	0.41	409.49	0.013	0.000	65.82	-0.01	0.00	0.00	0.00	0.00
81	SEABED	-315.37	-42.67	0.01	415.54	0.388	0.000	65.82	-0.01	0.00	0.00	0.00	0.00
82	SEABED	-321.42	-42.67	0.00	421.59	0.567	0.000	65.82	0.00	0.00	0.00	0.00	0.00
83	SEABED	-327.47	-42.67	0.00	427.64	0.572	0.000	65.82	0.00	0.00	0.00	0.00	0.00
84	SEABED	-333.52	-42.67	0.00	433.69	0.572	0.000	65.82	0.00	0.00	0.00	0.00	0.00
85	SEABED	-339.57	-42.67	0.00	439.74	0.572	0.000	65.82	0.00	0.00	0.00	0.00	0.00
86	SEABED	-345.62	-42.67	0.00	445.79	0.572	0.000	65.82	0.00	0.00	0.00	0.00	0.00
87	SEABED	-351.67	-42.67	0.00	451.84	0.572	0.000	65.82	0.00	0.00	0.00	0.00	0.00
88	SEABED	-357.72	-42.67	0.00	457.89	0.572	0.000	65.82	0.00	0.00	0.00	0.00	0.00
89	SEABED	-363.77	-42.67	0.00	463.94	0.572	0.000	65.82	0.00	0.00	0.00	0.00	0.00
90	SEABED	-369.82	-42.67	0.00	469.99	0.572	0.000	65.82	0.00	0.00	0.00	0.00	0.00
91	SEABED	-375.87	-42.67	0.00	476.04	0.572	0.000	65.82	0.00	0.00	0.00	0.00	0.00
92	SEABED	-381.92	-42.67	0.00	482.09	0.572	0.000	65.82	0.00	0.00	0.00	0.00	0.00
93	SEABED	-387.97	-42.67	0.00	488.14	0.572	0.000	65.82	0.00	0.00	0.00	0.00	0.00
94	SEABED	-394.03	-42.67	0.00	494.19	0.572	0.000	65.82	0.00	0.00	0.00	0.00	0.00
95	SEABED	-400.08	-42.67	0.00	500.24	0.572	0.000	65.82	0.00	0.00	0.00	0.00	0.00
96	SEABED	-406.13	-42.67	0.00	506.29	0.572	0.000	65.82	0.00	0.00	0.00	0.00	0.00
97	SEABED	-412.18	-42.67	0.00	512.34	0.572	0.000	65.82	0.00	0.00	0.00	0.00	0.00
98	SEABED	-418.23	-42.67	0.00	518.39	0.572	0.000	65.82	0.00	0.00	0.00	0.00	0.00
99	SEABED	-424.28	-42.67	0.00	524.44	0.572	0.000	65.82	0.00	0.00	0.00	0.00	0.00
100	SEABED	-430.33	-42.67	0.00	530.49	0.572	0.000	65.82	0.00	0.00	0.00	0.00	0.00

101	SEABED	-436.38	-42.67	0.00	536.54	0.572	0.000	65.82	0.00	0.00	0.00	0.00	0.00
102	SEABED	-442.43	-42.67	0.00	542.59	0.572	0.000	65.82	0.00	0.00	0.00	0.00	0.00
103	SEABED	-448.48	-42.67	0.00	548.64	0.572	0.000	65.82	0.00	0.00	0.00	0.00	0.00
104	SEABED	-454.53	-42.67	0.00	554.69	0.572	0.000	65.82	0.00	0.00	0.00	0.00	0.00

S T A T I C P I P E C O O R D I N A T E S, F O R C E S A N D S T R E S S E S

NODE NO.	PIPE SECTION	X COORD (M)	Y COORD (M)	VERT ANGLE (DEG)	PIPE LENGTH (M)	SUPPORT REACTION (KN)	SEPARA -TION (M)	AXIAL TENSION (KN)	BENDING MOMENT (KN-M)	TENSILE STRESS (MPA)	BENDING STRESS (MPA)	TOTAL STRESS (MPA)	PERCNT YIELD (PCT)
105	SEABED	-460.58	-42.67	0.00	560.74	0.572	0.000	65.82	0.00	0.00	0.00	0.00	0.00
106	SEABED	-466.63	-42.67	0.00	566.79	0.572	0.000	65.82	0.00	0.00	0.00	0.00	0.00
107	SEABED	-472.68	-42.67	0.00	572.84	0.572	0.000	65.82	0.00	0.00	0.00	0.00	0.00
108	SEABED	-478.73	-42.67	0.00	578.89	0.572	0.000	65.82	0.00	0.00	0.00	0.00	0.00
109	SEABED	-484.78	-42.67	0.00	584.94	0.572	0.000	65.82	0.00	0.00	0.00	0.00	0.00
110	SEABED	-490.83	-42.67	0.00	590.99	0.572	0.000	65.82	0.00	0.00	0.00	0.00	0.00
111	SEABED	-496.88	-42.67	0.00	597.04	0.572	0.000	65.82	0.00	0.00	0.00	0.00	0.00
112	SEABED	-502.93	-42.67	0.00	603.09	0.572	0.000	65.82	0.00	0.00	0.00	0.00	0.00
113	SEABED	-508.98	-42.67	0.00	609.14	0.572	0.000	65.82	0.00	0.00	0.00	0.00	0.00
114	SEABED	-515.03	-42.67	0.00	615.19	0.572	0.000	65.82	0.00	0.00	0.00	0.00	0.00
115	SEABED	-521.08	-42.67	0.00	621.24	0.572	0.000	65.82	0.00	0.00	0.00	0.00	0.00
116	SEABED	-527.13	-42.67	0.00	627.29	0.572	0.000	65.82	0.00	0.00	0.00	0.00	0.00
117	SEABED	-533.18	-42.67	0.00	633.34	0.572	0.000	65.82	0.00	0.00	0.00	0.00	0.00
118	SEABED	-539.23	-42.67	0.00	639.39	0.572	0.000	65.82	0.00	0.00	0.00	0.00	0.00
119	SEABED	-545.28	-42.67	0.00	645.44	0.572	0.000	65.82	0.00	0.00	0.00	0.00	0.00
120	SEABED	-551.33	-42.67	0.00	651.49	0.572	0.000	65.82	0.00	0.00	0.00	0.00	0.00
121	SEABED	-557.38	-42.67	0.00	657.54	0.572	0.000	65.82	0.00	0.00	0.00	0.00	0.00
122	SEABED	-563.43	-42.67	0.00	663.59	0.572	0.000	65.82	0.00	0.00	0.00	0.00	0.00
123	SEABED	-569.48	-42.67	0.00	669.64	0.570	0.000	65.82	0.00	0.00	0.00	0.00	0.00
124	SEABED	-575.53	-42.67	-0.01	675.69	0.449	0.000	65.82	0.00	0.00	0.00	0.00	0.00
125	SEABED	-579.86	-42.67	-0.12	680.02	0.000	0.000	65.82	0.00	0.00	0.00	0.00	0.00

S T A T I C P I P E C O O R D I N A T E S, F O R C E S A N D S T R E S S E S

NODE NO.	PIPE SECTION	X COORD (M)	Y COORD (M)	VERT ANGLE (DEG)	PIPE LENGTH (M)	SUPPORT REACTION (KN)	SEPARA -TION (M)	AXIAL TENSION (KN)	BENDING MOMENT (KN-M)	TENSILE STRESS (MPA)	BENDING STRESS (MPA)	TOTAL STRESS (MPA)	PERCNT YIELD (PCT)
1	LAYBARGE	96.31	6.41	1.93	0.00	9.948	0.000	0.00	2.75	0.00	4.25	4.25	1.18
3	LAYBARGE	84.28	6.05	1.58	12.04	24.035	0.000	-0.73	-19.04	-0.07	-29.47	29.54	8.21
5	LAYBARGE	73.45	5.73	1.91	22.87	24.765	0.000	-1.40	-30.17	-0.13	-46.71	46.84	13.01
7	TENSIONR	60.11	5.24	2.28	36.23	30.595	0.000	70.93	-21.49	6.83	-33.28	40.10	11.14
9	LAYBARGE	51.10	4.87	2.20	45.24	0.000	0.000	70.21	23.39	6.76	36.21	42.97	11.94
10	LAYBARGE	46.45	4.70	2.05	49.89	17.965	0.000	69.88	1.01	6.73	1.57	8.30	2.31
12	LAYBARGE	35.36	4.31	2.14	60.99	13.629	0.000	69.06	-33.60	6.65	-52.02	58.67	16.30
14	LAYBARGE	23.34	3.62	5.36	73.04	61.516	0.000	66.62	-204.01	6.41	-315.85	322.26	89.52
16	LAYBARGE	19.27	3.17	7.06	77.13	0.000	0.000	66.54	-110.09	6.41	-170.43	176.84	49.12
17	LAYBARGE	8.90	1.76	7.97	87.60	2.638	0.000	63.97	5.02	6.16	7.77	13.93	3.87
19	LAYBARGE	4.90	1.20	7.92	91.63	0.000	0.000	62.85	0.00	6.05	0.00	6.05	1.68
20	LAYBARGE	3.09	1.10	3.22	93.44	0.000	0.477	63.05	0.00	0.00	0.00	0.00	0.00
24	STINGER	-7.47	0.52	3.04	104.02	0.000	0.778	63.04	0.00	0.00	0.00	0.00	0.00
26	STINGER	-16.57	0.05	2.85	113.13	0.000	0.033	63.02	0.00	0.00	0.00	0.00	0.00
29	STINGER	-26.48	-0.43	4.79	123.06	4.445	0.000	62.98	0.00	0.00	0.00	0.00	0.00
31	STINGER	-37.33	-1.72	8.92	133.99	4.715	0.000	62.97	0.00	0.00	0.00	0.00	0.00
33	STINGER	-40.30	-2.30	11.05	137.01	0.000	0.227	63.02	0.00	0.00	0.00	0.00	0.00
35	SAGBEND	-46.47	-3.51	11.03	143.30	0.000	0.000	63.01	0.00	0.00	0.00	0.00	0.00
36	SAGBEND	-52.41	-4.66	11.01	149.35	0.000	0.000	63.01	0.00	0.00	0.00	0.00	0.00
37	SAGBEND	-58.35	-5.82	11.00	155.40	0.000	0.000	63.01	0.00	0.00	0.00	0.00	0.00
38	SAGBEND	-64.29	-6.97	10.98	161.45	0.000	0.000	63.00	0.00	0.00	0.00	0.00	0.00
39	SAGBEND	-70.22	-8.12	10.97	167.50	0.000	0.000	63.00	0.00	0.00	0.00	0.00	0.00
40	SAGBEND	-76.16	-9.27	10.95	173.55	0.000	0.000	63.00	0.00	0.00	0.00	0.00	0.00
41	SAGBEND	-82.10	-10.42	10.94	179.60	0.000	0.000	63.00	0.00	0.00	0.00	0.00	0.00
42	SAGBEND	-88.04	-11.57	10.93	185.65	0.000	0.000	62.99	0.00	0.00	0.00	0.00	0.00
43	SAGBEND	-93.99	-12.72	10.91	191.70	0.000	0.000	62.99	0.00	0.00	0.00	0.00	0.00
44	SAGBEND	-99.93	-13.86	10.90	197.75	0.000	0.000	62.99	0.00	0.00	0.00	0.00	0.00
45	SAGBEND	-105.87	-15.00	10.88	203.80	0.000	0.000	62.98	0.00	0.00	0.00	0.00	0.00
46	SAGBEND	-111.81	-16.15	10.87	209.85	0.000	0.000	62.98	0.00	0.00	0.00	0.00	0.00
47	SAGBEND	-117.75	-17.29	10.86	215.90	0.000	0.000	62.98	0.00	0.00	0.00	0.00	0.00
48	SAGBEND	-123.69	-18.42	10.84	221.95	0.000	0.000	62.97	0.00	0.00	0.00	0.00	0.00
49	SAGBEND	-129.63	-19.56	10.83	228.00	0.000	0.000	62.97	0.00	0.00	0.00	0.00	0.00
50	SAGBEND	-135.58	-20.70	10.81	234.05	0.000	0.000	62.97	0.00	0.00	0.00	0.00	0.00
51	SAGBEND	-141.52	-21.83	10.80	240.10	0.000	0.000	62.97	0.00	0.00	0.00	0.00	0.00
52	SAGBEND	-147.46	-22.96	10.79	246.15	0.000	0.000	62.96	0.00	0.00	0.00	0.00	0.00
53	SAGBEND	-153.41	-24.10	10.77	252.20	0.000	0.000	62.96	0.00	0.00	0.00	0.00	0.00
54	SAGBEND	-159.35	-25.23	10.76	258.25	0.000	0.000	62.96	0.00	0.00	0.00	0.00	0.00
55	SAGBEND	-165.29	-26.35	10.74	264.30	0.000	0.000	62.95	0.00	0.00	0.00	0.00	0.00
56	SAGBEND	-171.24	-27.48	10.73	270.35	0.000	0.000	62.95	0.00	0.00	0.00	0.00	0.00
57	SAGBEND	-177.18	-28.61	10.71	276.40	0.000	0.000	62.95	0.00	0.00	0.00	0.00	0.00
58	SAGBEND	-183.13	-29.73	10.70	282.45	0.000	0.000	62.94	0.00	0.00	0.00	0.00	0.00
59	SAGBEND	-186.85	-30.43	10.69	286.24	0.000	0.000	62.94	0.00	0.00	0.00	0.00	0.00
60	SAGBEND	-190.58	-31.14	10.68	290.03	0.000	0.000	62.94	0.00	0.00	0.00	0.00	0.00

S T A T I C P I P E C O O R D I N A T E S, F O R C E S A N D S T R E S S E S

NODE NO.	PIPE SECTION	X COORD (M)	Y COORD (M)	VERT ANGLE (DEG)	PIPE LENGTH (M)	SUPPORT REACTION (KN)	SEPARA -TION (M)	AXIAL TENSION (KN)	BENDING MOMENT (KN-M)	TENSILE STRESS (MPA)	BENDING STRESS (MPA)	TOTAL STRESS (MPA)	PERCNT YIELD (PCT)
61	SAGBEND	-195.02	-31.96	10.30	294.55	0.000	0.000	62.86	0.00	0.00	0.00	0.00	0.00
62	SAGBEND	-200.98	-33.02	9.79	300.60	0.000	0.000	62.76	0.00	0.00	0.00	0.00	0.00
63	SAGBEND	-206.94	-34.02	9.27	306.65	0.000	0.000	62.67	0.00	0.00	0.00	0.00	0.00
64	SAGBEND	-212.92	-34.96	8.75	312.70	0.000	0.000	62.58	0.00	0.00	0.00	0.00	0.00
65	SAGBEND	-218.90	-35.86	8.23	318.75	0.000	0.000	62.50	0.00	0.00	0.00	0.00	0.00
66	SAGBEND	-224.89	-36.70	7.71	324.80	0.000	0.000	62.42	0.00	0.00	0.00	0.00	0.00
67	SAGBEND	-230.89	-37.48	7.19	330.85	0.000	0.000	62.34	0.00	0.00	0.00	0.00	0.00
68	SAGBEND	-236.90	-38.21	6.67	336.90	0.000	0.000	62.27	0.00	0.00	0.00	0.00	0.00
69	SAGBEND	-242.91	-38.89	6.15	342.95	0.000	0.000	62.21	0.00	0.00	0.00	0.00	0.00
70	SAGBEND	-248.93	-39.51	5.62	349.00	0.000	0.000	62.15	0.00	0.00	0.00	0.00	0.00
71	SAGBEND	-254.95	-40.07	5.10	355.05	0.000	0.000	62.10	0.00	0.00	0.00	0.00	0.00
72	SAGBEND	-260.98	-40.58	4.57	361.10	0.000	0.000	62.05	0.00	0.00	0.00	0.00	0.00
73	SAGBEND	-267.01	-41.04	4.05	367.15	0.000	0.000	62.01	0.00	0.00	0.00	0.00	0.00
74	SAGBEND	-273.05	-41.44	3.52	373.20	0.000	0.000	61.97	0.00	0.00	0.00	0.00	0.00
75	SAGBEND	-279.09	-41.78	2.99	379.25	0.000	0.000	61.94	0.00	0.00	0.00	0.00	0.00
76	SAGBEND	-285.13	-42.07	2.46	385.30	0.000	0.000	61.91	0.00	0.00	0.00	0.00	0.00
77	SAGBEND	-291.18	-42.30	1.93	391.35	0.000	0.000	61.89	0.00	0.00	0.00	0.00	0.00
78	SAGBEND	-297.23	-42.48	1.40	397.40	0.000	0.000	61.87	0.00	0.00	0.00	0.00	0.00
79	SAGBEND	-303.27	-42.60	0.87	403.45	0.000	0.000	61.86	0.00	0.00	0.00	0.00	0.00
80	SAGBEND	-309.32	-42.66	0.35	409.50	0.036	0.000	61.85	-0.01	0.00	0.00	0.00	0.00
81	SEABED	-315.37	-42.67	0.01	415.55	0.454	0.000	61.85	0.00	0.00	0.00	0.00	0.00
82	SEABED	-321.42	-42.67	0.00	421.60	0.570	0.000	61.85	0.00	0.00	0.00	0.00	0.00
83	SEABED	-327.47	-42.67	0.00	427.65	0.572	0.000	61.85	0.00	0.00	0.00	0.00	0.00
84	SEABED	-333.52	-42.67	0.00	433.70	0.572	0.000	61.85	0.00	0.00	0.00	0.00	0.00
85	SEABED	-339.57	-42.67	0.00	439.75	0.572	0.000	61.85	0.00	0.00	0.00	0.00	0.00
86	SEABED	-345.62	-42.67	0.00	445.80	0.572	0.000	61.85	0.00	0.00	0.00	0.00	0.00
87	SEABED	-351.67	-42.67	0.00	451.85	0.572	0.000	61.85	0.00	0.00	0.00	0.00	0.00
88	SEABED	-357.72	-42.67	0.00	457.90	0.572	0.000	61.85	0.00	0.00	0.00	0.00	0.00
89	SEABED	-363.77	-42.67	0.00	463.95	0.572	0.000	61.85	0.00	0.00	0.00	0.00	0.00
90	SEABED	-369.82	-42.67	0.00	470.00	0.572	0.000	61.85	0.00	0.00	0.00	0.00	0.00
91	SEABED	-375.87	-42.67	0.00	476.05	0.572	0.000	61.85	0.00	0.00	0.00	0.00	0.00
92	SEABED	-381.92	-42.67	0.00	482.10	0.572	0.000	61.85	0.00	0.00	0.00	0.00	0.00
93	SEABED	-387.97	-42.67	0.00	488.15	0.572	0.000	61.85	0.00	0.00	0.00	0.00	0.00
94	SEABED	-394.02	-42.67	0.00	494.20	0.572	0.000	61.85	0.00	0.00	0.00	0.00	0.00
95	SEABED	-400.07	-42.67	0.00	500.25	0.572	0.000	61.85	0.00	0.00	0.00	0.00	0.00
96	SEABED	-406.12	-42.67	0.00	506.30	0.572	0.000	61.85	0.00	0.00	0.00	0.00	0.00
97	SEABED	-412.17	-42.67	0.00	512.35	0.572	0.000	61.85	0.00	0.00	0.00	0.00	0.00
98	SEABED	-418.22	-42.67	0.00	518.40	0.572	0.000	61.85	0.00	0.00	0.00	0.00	0.00
99	SEABED	-424.27	-42.67	0.00	524.45	0.572	0.000	61.85	0.00	0.00	0.00	0.00	0.00
100	SEABED	-430.32	-42.67	0.00	530.50	0.572	0.000	61.85	0.00	0.00	0.00	0.00	0.00
101	SEABED	-436.37	-42.67	0.00	536.55	0.572	0.000	61.85	0.00	0.00	0.00	0.00	0.00
102	SEABED	-442.42	-42.67	0.00	542.60	0.572	0.000	61.85	0.00	0.00	0.00	0.00	0.00
103	SEABED	-448.47	-42.67	0.00	548.65	0.572	0.000	61.85	0.00	0.00	0.00	0.00	0.00
104	SEABED	-454.52	-42.67	0.00	554.70	0.572	0.000	61.85	0.00	0.00	0.00	0.00	0.00

S T A T I C P I P E C O O R D I N A T E S, F O R C E S A N D S T R E S S E S

NODE NO.	PIPE SECTION	X COORD (M)	Y COORD (M)	VERT ANGLE (DEG)	PIPE LENGTH (M)	SUPPORT REACTION (KN)	SEPARA -TION (M)	AXIAL TENSION (KN)	BENDING MOMENT (KN-M)	TENSILE STRESS (MPA)	BENDING STRESS (MPA)	TOTAL STRESS (MPA)	PERCNT YIELD (PCT)
105	SEABED	-460.57	-42.67	0.00	560.75	0.572	0.000	61.85	0.00	0.00	0.00	0.00	0.00

106	SEABED	-466.62	-42.67	0.00	566.80	0.572	0.000	61.85	0.00	0.00	0.00	0.00	0.00
107	SEABED	-472.67	-42.67	0.00	572.85	0.572	0.000	61.85	0.00	0.00	0.00	0.00	0.00
108	SEABED	-478.72	-42.67	0.00	578.90	0.572	0.000	61.85	0.00	0.00	0.00	0.00	0.00
109	SEABED	-484.77	-42.67	0.00	584.95	0.572	0.000	61.85	0.00	0.00	0.00	0.00	0.00
110	SEABED	-490.82	-42.67	0.00	591.00	0.572	0.000	61.85	0.00	0.00	0.00	0.00	0.00
111	SEABED	-496.87	-42.67	0.00	597.05	0.572	0.000	61.85	0.00	0.00	0.00	0.00	0.00
112	SEABED	-502.92	-42.67	0.00	603.10	0.572	0.000	61.85	0.00	0.00	0.00	0.00	0.00
113	SEABED	-508.97	-42.67	0.00	609.15	0.572	0.000	61.85	0.00	0.00	0.00	0.00	0.00
114	SEABED	-515.02	-42.67	0.00	615.20	0.572	0.000	61.85	0.00	0.00	0.00	0.00	0.00
115	SEABED	-521.07	-42.67	0.00	621.25	0.572	0.000	61.85	0.00	0.00	0.00	0.00	0.00
116	SEABED	-527.12	-42.67	0.00	627.30	0.572	0.000	61.85	0.00	0.00	0.00	0.00	0.00
117	SEABED	-533.17	-42.67	0.00	633.35	0.572	0.000	61.85	0.00	0.00	0.00	0.00	0.00
118	SEABED	-539.22	-42.67	0.00	639.40	0.572	0.000	61.85	0.00	0.00	0.00	0.00	0.00
119	SEABED	-545.27	-42.67	0.00	645.45	0.572	0.000	61.85	0.00	0.00	0.00	0.00	0.00
120	SEABED	-551.32	-42.67	0.00	651.50	0.572	0.000	61.85	0.00	0.00	0.00	0.00	0.00
121	SEABED	-557.37	-42.67	0.00	657.55	0.572	0.000	61.85	0.00	0.00	0.00	0.00	0.00
122	SEABED	-563.42	-42.67	0.00	663.60	0.572	0.000	61.85	0.00	0.00	0.00	0.00	0.00
123	SEABED	-569.47	-42.67	0.00	669.65	0.572	0.000	61.85	0.00	0.00	0.00	0.00	0.00
124	SEABED	-575.52	-42.67	0.00	675.70	0.572	0.000	61.85	0.00	0.00	0.00	0.00	0.00
125	SEABED	-581.57	-42.67	0.00	681.75	0.479	0.000	61.85	0.00	0.00	0.00	0.00	0.00
126	SEABED	-585.72	-42.67	-0.01	685.89	0.351	0.000	61.85	0.00	0.00	0.00	0.00	0.00
127	SEABED	-589.86	-42.67	-0.12	690.03	0.000	0.000	61.85	0.00	0.00	0.00	0.00	0.00

S T A T I C P I P E C O O R D I N A T E S, F O R C E S A N D S T R E S S E S

NODE NO.	PIPE SECTION	X COORD (M)	Y COORD (M)	VERT ANGLE (DEG)	PIPE LENGTH (M)	SUPPORT REACTION (KN)	SEPARA -TION (M)	AXIAL TENSION (KN)	BENDING MOMENT (KN-M)	TENSILE STRESS (MPA)	BENDING STRESS (MPA)	TOTAL STRESS (MPA)	PERCNT YIELD (PCT)
1	LAYBARGE	96.31	6.41	1.93	0.00	9.948	0.000	0.00	2.75	0.00	4.25	4.25	1.18
3	LAYBARGE	84.28	6.05	1.58	12.04	24.035	0.000	-0.73	-19.04	-0.07	-29.47	29.54	8.21
5	LAYBARGE	73.45	5.73	1.91	22.87	24.765	0.000	-1.40	-30.17	-0.13	-46.71	46.84	13.01
7	TENSIONR	60.11	5.24	2.28	36.23	30.592	0.000	70.92	-21.49	6.83	-33.27	40.10	11.14
9	LAYBARGE	51.10	4.87	2.20	45.24	0.000	0.000	70.21	23.37	6.76	36.19	42.95	11.93
10	LAYBARGE	46.45	4.70	2.05	49.89	17.977	0.000	69.88	1.00	6.73	1.54	8.27	2.30
12	LAYBARGE	35.36	4.31	2.14	60.99	13.583	0.000	69.06	-33.54	6.65	-51.93	58.58	16.27
14	LAYBARGE	23.34	3.62	5.36	73.04	61.657	0.000	66.62	-204.32	6.41	-316.31	322.73	89.65
16	LAYBARGE	19.27	3.17	7.06	77.13	0.000	0.000	66.54	-110.01	6.41	-170.32	176.73	49.09
17	LAYBARGE	8.90	1.76	7.95	87.60	13.941	0.000	63.97	9.34	6.16	14.46	20.62	5.73
19	LAYBARGE	4.90	1.21	7.65	91.63	0.000	0.000	62.81	47.70	6.05	73.84	79.89	22.19
20	LAYBARGE	3.08	0.97	7.40	93.47	0.000	0.348	62.31	56.78	6.00	87.91	93.90	26.08
24	STINGER	-7.43	-0.26	6.21	104.05	5.915	0.000	60.17	0.00	5.78	0.00	5.79	1.61
26	STINGER	-16.57	0.01	0.31	113.20	4.361	0.000	60.72	0.00	0.00	0.00	0.00	0.00
29	STINGER	-26.47	-0.39	4.33	123.12	4.220	0.000	60.72	0.00	0.00	0.00	0.00	0.00
31	STINGER	-37.34	-1.59	8.56	134.05	4.801	0.000	60.70	0.00	0.00	0.00	0.00	0.00
33	STINGER	-40.30	-2.16	10.80	137.06	0.000	0.214	60.75	0.00	0.00	0.00	0.00	0.00
35	SAGBEND	-46.49	-3.34	10.78	143.36	0.000	0.000	60.75	0.00	0.00	0.00	0.00	0.00
36	SAGBEND	-52.43	-4.47	10.76	149.41	0.000	0.000	60.74	0.00	0.00	0.00	0.00	0.00
37	SAGBEND	-58.37	-5.60	10.75	155.46	0.000	0.000	60.74	0.00	0.00	0.00	0.00	0.00
38	SAGBEND	-64.32	-6.73	10.73	161.51	0.000	0.000	60.74	0.00	0.00	0.00	0.00	0.00
39	SAGBEND	-70.26	-7.85	10.72	167.56	0.000	0.000	60.73	0.00	0.00	0.00	0.00	0.00
40	SAGBEND	-76.21	-8.98	10.70	173.61	0.000	0.000	60.73	0.00	0.00	0.00	0.00	0.00
41	SAGBEND	-82.15	-10.10	10.69	179.66	0.000	0.000	60.73	0.00	0.00	0.00	0.00	0.00
42	SAGBEND	-88.10	-11.22	10.68	185.71	0.000	0.000	60.73	0.00	0.00	0.00	0.00	0.00
43	SAGBEND	-94.04	-12.34	10.66	191.76	0.000	0.000	60.72	0.00	0.00	0.00	0.00	0.00
44	SAGBEND	-99.99	-13.46	10.65	197.81	0.000	0.000	60.72	0.00	0.00	0.00	0.00	0.00
45	SAGBEND	-105.93	-14.58	10.63	203.86	0.000	0.000	60.72	0.00	0.00	0.00	0.00	0.00
46	SAGBEND	-111.88	-15.69	10.62	209.91	0.000	0.000	60.71	0.00	0.00	0.00	0.00	0.00
47	SAGBEND	-117.83	-16.81	10.60	215.96	0.000	0.000	60.71	0.00	0.00	0.00	0.00	0.00
48	SAGBEND	-123.77	-17.92	10.59	222.01	0.000	0.000	60.71	0.00	0.00	0.00	0.00	0.00
49	SAGBEND	-129.72	-19.03	10.57	228.06	0.000	0.000	60.71	0.00	0.00	0.00	0.00	0.00
50	SAGBEND	-135.67	-20.14	10.56	234.11	0.000	0.000	60.70	0.00	0.00	0.00	0.00	0.00
51	SAGBEND	-141.62	-21.25	10.54	240.16	0.000	0.000	60.70	0.00	0.00	0.00	0.00	0.00
52	SAGBEND	-147.56	-22.35	10.53	246.21	0.000	0.000	60.70	0.00	0.00	0.00	0.00	0.00
53	SAGBEND	-153.51	-23.46	10.51	252.26	0.000	0.000	60.69	0.00	0.00	0.00	0.00	0.00
54	SAGBEND	-159.46	-24.56	10.50	258.32	0.000	0.000	60.69	0.00	0.00	0.00	0.00	0.00
55	SAGBEND	-165.41	-25.66	10.48	264.37	0.000	0.000	60.69	0.00	0.00	0.00	0.00	0.00
56	SAGBEND	-171.36	-26.76	10.47	270.42	0.000	0.000	60.69	0.00	0.00	0.00	0.00	0.00
57	SAGBEND	-177.31	-27.86	10.46	276.47	0.000	0.000	60.68	0.00	0.00	0.00	0.00	0.00
58	SAGBEND	-183.26	-28.96	10.44	282.52	0.000	0.000	60.68	0.00	0.00	0.00	0.00	0.00
59	SAGBEND	-189.21	-30.05	10.43	288.57	0.000	0.000	60.68	0.00	0.00	0.00	0.00	0.00
60	SAGBEND	-195.16	-31.15	10.41	294.62	0.000	0.000	60.67	0.00	0.00	0.00	0.00	0.00

S T A T I C P I P E C O O R D I N A T E S, F O R C E S A N D S T R E S S E S

NODE NO.	PIPE SECTION	X COORD (M)	Y COORD (M)	VERT ANGLE (DEG)	PIPE LENGTH (M)	SUPPORT REACTION (KN)	SEPARA -TION (M)	AXIAL TENSION (KN)	BENDING MOMENT (KN-M)	TENSILE STRESS (MPA)	BENDING STRESS (MPA)	TOTAL STRESS (MPA)	PERCNT YIELD (PCT)
61	SAGBEND	-200.55	-32.14	10.40	300.10	0.000	0.000	60.67	0.00	0.00	0.00	0.00	0.00
62	SAGBEND	-207.07	-33.30	9.81	306.72	0.000	0.000	60.56	0.00	0.00	0.00	0.00	0.00
63	SAGBEND	-213.03	-34.30	9.28	312.77	0.000	0.000	60.47	0.00	0.00	0.00	0.00	0.00
64	SAGBEND	-219.01	-35.25	8.74	318.82	0.000	0.000	60.38	0.00	0.00	0.00	0.00	0.00
65	SAGBEND	-224.99	-36.14	8.21	324.87	0.000	0.000	60.29	0.00	0.00	0.00	0.00	0.00
66	SAGBEND	-230.98	-36.98	7.67	330.92	0.000	0.000	60.21	0.00	0.00	0.00	0.00	0.00
67	SAGBEND	-236.98	-37.76	7.13	336.97	0.000	0.000	60.14	0.00	0.00	0.00	0.00	0.00
68	SAGBEND	-242.99	-38.48	6.59	343.02	0.000	0.000	60.07	0.00	0.00	0.00	0.00	0.00
69	SAGBEND	-249.00	-39.14	6.04	349.07	0.000	0.000	60.01	0.00	0.00	0.00	0.00	0.00
70	SAGBEND	-255.02	-39.75	5.50	355.12	0.000	0.000	59.95	0.00	0.00	0.00	0.00	0.00
71	SAGBEND	-261.05	-40.30	4.96	361.17	0.000	0.000	59.90	0.00	0.00	0.00	0.00	0.00
72	SAGBEND	-267.08	-40.80	4.41	367.22	0.000	0.000	59.85	0.00	0.00	0.00	0.00	0.00
73	SAGBEND	-273.11	-41.23	3.86	373.27	0.000	0.000	59.81	0.00	0.00	0.00	0.00	0.00
74	SAGBEND	-279.15	-41.61	3.32	379.32	0.000	0.000	59.78	0.00	0.00	0.00	0.00	0.00
75	SAGBEND	-285.19	-41.93	2.77	385.37	0.000	0.000	59.74	0.00	0.00	0.00	0.00	0.00
76	SAGBEND	-291.24	-42.20	2.22	391.42	0.000	0.000	59.72	0.00	0.00	0.00	0.00	0.00
77	SAGBEND	-297.28	-42.40	1.67	397.47	0.000	0.000	59.70	0.00	0.00	0.00	0.00	0.00
78	SAGBEND	-303.33	-42.55	1.12	403.52	0.000	0.000	59.69	0.00	0.00	0.00	0.00	0.00
79	SAGBEND	-309.38	-42.64	0.58	409.57	0.001	0.000	59.68	0.00	0.00	0.00	0.00	0.00
80	SEABED	-315.43	-42.67	0.05	415.62	0.272	0.000	59.68	0.00	0.00	0.00	0.00	0.00
81	SEABED	-321.48	-42.67	0.00	421.67	0.560	0.000	59.68	0.00	0.00	0.00	0.00	0.00
82	SEABED	-327.53	-42.67	0.00	427.72	0.572	0.000	59.68	0.00	0.00	0.00	0.00	0.00
83	SEABED	-333.58	-42.67	0.00	433.77	0.572	0.000	59.68	0.00	0.00	0.00	0.00	0.00
84	SEABED	-339.63	-42.67	0.00	439.82	0.572	0.000	59.68	0.00	0.00	0.00	0.00	0.00
85	SEABED	-345.68	-42.67	0.00	445.87	0.572	0.000	59.68	0.00	0.00	0.00	0.00	0.00
86	SEABED	-351.73	-42.67	0.00	451.92	0.572	0.000	59.68	0.00	0.00	0.00	0.00	0.00
87	SEABED	-357.78	-42.67	0.00	457.97	0.572	0.000	59.68	0.00	0.00	0.00	0.00	0.00
88	SEABED	-363.83	-42.67	0.00	464.02	0.572	0.000	59.68	0.00	0.00	0.00	0.00	0.00
89	SEABED	-369.88	-42.67	0.00	470.07	0.572	0.000	59.68	0.00	0.00	0.00	0.00	0.00
90	SEABED	-375.93	-42.67	0.00	476.12	0.572	0.000	59.68	0.00	0.00	0.00	0.00	0.00
91	SEABED	-381.98	-42.67	0.00	482.17	0.572	0.000	59.68	0.00	0.00	0.00	0.00	0.00
92	SEABED	-388.03	-42.67	0.00	488.22	0.572	0.000	59.68	0.00	0.00	0.00	0.00	0.00
93	SEABED	-394.08	-42.67	0.00	494.27	0.572	0.000	59.68	0.00	0.00	0.00	0.00	0.00
94	SEABED	-400.13	-42.67	0.00	500.32	0.572	0.000	59.68	0.00	0.00	0.00	0.00	0.00
95	SEABED	-406.18	-42.67	0.00	506.37	0.572	0.000	59.68	0.00	0.00	0.00	0.00	0.00
96	SEABED	-412.23	-42.67	0.00	512.42	0.572	0.000	59.68	0.00	0.00	0.00	0.00	0.00
97	SEABED	-418.28	-42.67	0.00	518.47	0.572	0.000	59.68	0.00	0.00	0.00	0.00	0.00
98	SEABED	-424.33	-42.67	0.00	524.52	0.572	0.000	59.68	0.00	0.00	0.00	0.00	0.00
99	SEABED	-430.38	-42.67	0.00	530.57	0.572	0.000	59.68	0.00	0.00	0.00	0.00	0.00
100	SEABED	-436.43	-42.67	0.00	536.62	0.572	0.000	59.68	0.00	0.00	0.00	0.00	0.00
101	SEABED	-442.48	-42.67	0.00	542.67	0.572	0.000	59.68	0.00	0.00	0.00	0.00	0.00
102	SEABED	-448.53	-42.67	0.00	548.72	0.572	0.000	59.68	0.00	0.00	0.00	0.00	0.00
103	SEABED	-454.58	-42.67	0.00	554.77	0.572	0.000	59.68	0.00	0.00	0.00	0.00	0.00
104	SEABED	-460.63	-42.67	0.00	560.82	0.572	0.000	59.68	0.00	0.00	0.00	0.00	0.00

S T A T I C P I P E C O O R D I N A T E S, F O R C E S A N D S T R E S S E S

NODE NO.	PIPE SECTION	X COORD (M)	Y COORD (M)	VERT ANGLE (DEG)	PIPE LENGTH (M)	SUPPORT REACTION (KN)	SEPARA -TION (M)	AXIAL TENSION (KN)	BENDING MOMENT (KN-M)	TENSILE STRESS (MPA)	BENDING STRESS (MPA)	TOTAL STRESS (MPA)	PERCNT YIELD (PCT)
105	SEABED	-466.68	-42.67	0.00	566.87	0.572	0.000	59.68	0.00	0.00	0.00	0.00	0.00
106	SEABED	-472.73	-42.67	0.00	572.92	0.572	0.000	59.68	0.00	0.00	0.00	0.00	0.00
107	SEABED	-478.78	-42.67	0.00	578.97	0.572	0.000	59.68	0.00	0.00	0.00	0.00	0.00
108	SEABED	-484.83	-42.67	0.00	585.02	0.572	0.000	59.68	0.00	0.00	0.00	0.00	0.00
109	SEABED	-490.88	-42.67	0.00	591.07	0.572	0.000	59.68	0.00	0.00	0.00	0.00	0.00
110	SEABED	-496.93	-42.67	0.00	597.12	0.572	0.000	59.68	0.00	0.00	0.00	0.00	0.00
111	SEABED	-502.98	-42.67	0.00	603.17	0.572	0.000	59.68	0.00	0.00	0.00	0.00	0.00
112	SEABED	-509.03	-42.67	0.00	609.22	0.572	0.000	59.68	0.00	0.00	0.00	0.00	0.00
113	SEABED	-515.08	-42.67	0.00	615.27	0.572	0.000	59.68	0.00	0.00	0.00	0.00	0.00
114	SEABED	-521.13	-42.67	0.00	621.32	0.572	0.000	59.68	0.00	0.00	0.00	0.00	0.00
115	SEABED	-527.18	-42.67	0.00	627.37	0.572	0.000	59.68	0.00	0.00	0.00	0.00	0.00
116	SEABED	-533.23	-42.67	0.00	633.42	0.572	0.000	59.68	0.00	0.00	0.00	0.00	0.00
117	SEABED	-539.28	-42.67	0.00	639.47	0.572	0.000	59.68	0.00	0.00	0.00	0.00	0.00
118	SEABED	-545.33	-42.67	0.00	645.52	0.572	0.000	59.68	0.00	0.00	0.00	0.00	0.00
119	SEABED	-551.38	-42.67	0.00	651.57	0.572	0.000	59.68	0.00	0.00	0.00	0.00	0.00
120	SEABED	-557.43	-42.67	0.00	657.62	0.572	0.000	59.68	0.00	0.00	0.00	0.00	0.00
121	SEABED	-563.48	-42.67	0.00	663.67	0.572	0.000	59.68	0.00	0.00	0.00	0.00	0.00
122	SEABED	-569.53	-42.67	0.00	669.72	0.572	0.000	59.68	0.00	0.00	0.00	0.00	0.00

123	SEABED	-575.58	-42.67	0.00	675.77	0.572	0.000	59.68	0.00	0.00	0.00	0.00	0.00
124	SEABED	-581.63	-42.67	0.00	681.82	0.572	0.000	59.68	0.00	0.00	0.00	0.00	0.00
125	SEABED	-587.68	-42.67	0.00	687.87	0.572	0.000	59.68	0.00	0.00	0.00	0.00	0.00
126	SEABED	-593.73	-42.67	0.00	693.92	0.426	0.000	59.68	0.00	0.00	0.00	0.00	0.00
127	SEABED	-596.82	-42.67	-0.02	697.01	0.245	0.000	59.68	0.00	0.00	0.00	0.00	0.00
128	SEABED	-599.91	-42.67	-0.13	700.10	0.000	0.000	59.68	0.00	0.00	0.00	0.00	0.00

S T A T I C P I P E C O O R D I N A T E S, F O R C E S A N D S T R E S S E S

NODE NO.	PIPE SECTION	X COORD (M)	Y COORD (M)	VERT ANGLE (DEG)	PIPE LENGTH (M)	SUPPORT REACTION (KN)	SEPARA -TION (M)	AXIAL TENSION (KN)	BENDING MOMENT (KN-M)	TENSILE STRESS (MPA)	BENDING STRESS (MPA)	TOTAL STRESS (MPA)	PERCNT YIELD (PCT)
1	LAYBARGE	96.31	6.41	1.93	0.00	9.948	0.000	0.00	2.75	0.00	4.25	4.25	1.18
3	LAYBARGE	84.28	6.05	1.58	12.04	24.033	0.000	-0.73	-19.03	-0.07	-29.47	29.54	8.20
5	LAYBARGE	73.45	5.73	1.91	22.87	24.769	0.000	-1.40	-30.18	-0.13	-46.72	46.86	13.02
7	TENSIONR	60.11	5.24	2.28	36.23	30.598	0.000	82.62	-21.46	7.96	-33.22	41.17	11.44
9	LAYBARGE	51.10	4.87	2.21	45.24	0.000	0.000	81.90	23.31	7.89	36.08	43.97	12.21
10	LAYBARGE	46.45	4.70	2.05	49.89	17.875	0.000	81.57	1.10	7.85	1.71	9.56	2.66
12	LAYBARGE	35.36	4.31	2.14	60.99	13.825	0.000	80.75	-33.64	7.78	-52.08	59.85	16.63
14	LAYBARGE	23.34	3.62	5.36	73.04	62.631	0.000	78.30	-205.04	7.54	-317.44	324.98	90.27
16	LAYBARGE	19.27	3.17	7.07	77.13	0.000	0.000	78.24	-109.81	7.53	-170.00	177.53	49.31
17	LAYBARGE	8.90	1.76	7.95	87.60	13.783	0.000	75.67	9.53	7.29	14.75	22.04	6.12
19	LAYBARGE	4.90	1.21	7.65	91.63	0.000	0.000	74.51	47.27	7.17	73.19	80.36	22.32
20	LAYBARGE	3.08	0.97	7.40	93.47	0.000	0.349	74.01	56.17	7.13	86.96	94.08	26.13
24	STINGER	-7.43	-0.26	6.22	104.05	4.127	0.000	71.86	0.00	6.90	0.00	6.92	1.92
26	STINGER	-16.57	0.01	0.46	113.20	5.570	0.000	72.52	0.00	0.00	0.00	0.00	0.00
29	STINGER	-26.49	-0.45	4.76	123.13	5.380	0.000	72.52	0.00	0.00	0.00	0.00	0.00
31	STINGER	-37.34	-1.76	8.60	134.06	4.411	0.000	72.53	0.00	0.00	0.00	0.00	0.00
33	STINGER	-40.30	-2.30	10.33	137.08	0.000	0.269	72.56	0.00	0.00	0.00	0.00	0.00
35	SAGBEND	-46.49	-3.42	10.32	143.36	0.000	0.000	72.56	0.00	0.00	0.00	0.00	0.00
36	SAGBEND	-52.44	-4.51	10.30	149.41	0.000	0.000	72.56	0.00	0.00	0.00	0.00	0.00
37	SAGBEND	-58.39	-5.59	10.29	155.46	0.000	0.000	72.55	0.00	0.00	0.00	0.00	0.00
38	SAGBEND	-64.34	-6.67	10.27	161.51	0.000	0.000	72.55	0.00	0.00	0.00	0.00	0.00
39	SAGBEND	-70.30	-7.74	10.26	167.56	0.000	0.000	72.55	0.00	0.00	0.00	0.00	0.00
40	SAGBEND	-76.25	-8.82	10.25	173.61	0.000	0.000	72.55	0.00	0.00	0.00	0.00	0.00
41	SAGBEND	-82.20	-9.90	10.24	179.66	0.000	0.000	72.54	0.00	0.00	0.00	0.00	0.00
42	SAGBEND	-88.16	-10.97	10.22	185.71	0.000	0.000	72.54	0.00	0.00	0.00	0.00	0.00
43	SAGBEND	-94.11	-12.04	10.21	191.76	0.000	0.000	72.54	0.00	0.00	0.00	0.00	0.00
44	SAGBEND	-100.07	-13.12	10.20	197.81	0.000	0.000	72.53	0.00	0.00	0.00	0.00	0.00
45	SAGBEND	-106.02	-14.19	10.19	203.86	0.000	0.000	72.53	0.00	0.00	0.00	0.00	0.00
46	SAGBEND	-111.98	-15.26	10.18	209.91	0.000	0.000	72.53	0.00	0.00	0.00	0.00	0.00
47	SAGBEND	-117.93	-16.33	10.16	215.96	0.000	0.000	72.53	0.00	0.00	0.00	0.00	0.00
48	SAGBEND	-123.89	-17.39	10.15	222.01	0.000	0.000	72.52	0.00	0.00	0.00	0.00	0.00
49	SAGBEND	-129.84	-18.46	10.14	228.06	0.000	0.000	72.52	0.00	0.00	0.00	0.00	0.00
50	SAGBEND	-135.80	-19.52	10.13	234.11	0.000	0.000	72.52	0.00	0.00	0.00	0.00	0.00
51	SAGBEND	-141.75	-20.58	10.11	240.16	0.000	0.000	72.51	0.00	0.00	0.00	0.00	0.00
52	SAGBEND	-147.71	-21.65	10.10	246.21	0.000	0.000	72.51	0.00	0.00	0.00	0.00	0.00
53	SAGBEND	-153.67	-22.71	10.09	252.26	0.000	0.000	72.51	0.00	0.00	0.00	0.00	0.00
54	SAGBEND	-159.62	-23.77	10.08	258.31	0.000	0.000	72.51	0.00	0.00	0.00	0.00	0.00
55	SAGBEND	-165.58	-24.82	10.06	264.36	0.000	0.000	72.50	0.00	0.00	0.00	0.00	0.00
56	SAGBEND	-171.54	-25.88	10.05	270.41	0.000	0.000	72.50	0.00	0.00	0.00	0.00	0.00
57	SAGBEND	-177.49	-26.94	10.04	276.46	0.000	0.000	72.50	0.00	0.00	0.00	0.00	0.00
58	SAGBEND	-183.45	-27.99	10.03	282.51	0.000	0.000	72.50	0.00	0.00	0.00	0.00	0.00
59	SAGBEND	-189.41	-29.04	10.02	288.57	0.000	0.000	72.49	0.00	0.00	0.00	0.00	0.00
60	SAGBEND	-195.37	-30.09	10.00	294.62	0.000	0.000	72.49	0.00	0.00	0.00	0.00	0.00

S T A T I C P I P E C O O R D I N A T E S, F O R C E S A N D S T R E S S E S

NODE NO.	PIPE SECTION	X COORD (M)	Y COORD (M)	VERT ANGLE (DEG)	PIPE LENGTH (M)	SUPPORT REACTION (KN)	SEPARA -TION (M)	AXIAL TENSION (KN)	BENDING MOMENT (KN-M)	TENSILE STRESS (MPA)	BENDING STRESS (MPA)	TOTAL STRESS (MPA)	PERCNT YIELD (PCT)
61	SAGBEND	-200.77	-31.05	9.99	300.10	0.000	0.000	72.49	0.00	0.00	0.00	0.00	0.00
62	SAGBEND	-207.29	-32.17	9.50	306.72	0.000	0.000	72.38	0.00	0.00	0.00	0.00	0.00
63	SAGBEND	-213.26	-33.14	9.06	312.77	0.000	0.000	72.29	0.00	0.00	0.00	0.00	0.00
64	SAGBEND	-219.24	-34.07	8.61	318.82	0.000	0.000	72.20	0.00	0.00	0.00	0.00	0.00
65	SAGBEND	-225.22	-34.95	8.16	324.87	0.000	0.000	72.12	0.00	0.00	0.00	0.00	0.00
66	SAGBEND	-231.22	-35.79	7.71	330.92	0.000	0.000	72.04	0.00	0.00	0.00	0.00	0.00
67	SAGBEND	-237.21	-36.58	7.26	336.97	0.000	0.000	71.96	0.00	0.00	0.00	0.00	0.00
68	SAGBEND	-243.22	-37.32	6.80	343.02	0.000	0.000	71.89	0.00	0.00	0.00	0.00	0.00
69	SAGBEND	-249.23	-38.01	6.35	349.07	0.000	0.000	71.83	0.00	0.00	0.00	0.00	0.00
70	SAGBEND	-255.24	-38.65	5.90	355.12	0.000	0.000	71.77	0.00	0.00	0.00	0.00	0.00
71	SAGBEND	-261.26	-39.25	5.44	361.17	0.000	0.000	71.71	0.00	0.00	0.00	0.00	0.00
72	SAGBEND	-267.29	-39.80	4.99	367.22	0.000	0.000	71.66	0.00	0.00	0.00	0.00	0.00
73	SAGBEND	-273.32	-40.30	4.53	373.27	0.000	0.000	71.61	0.00	0.00	0.00	0.00	0.00
74	SAGBEND	-279.35	-40.76	4.07	379.32	0.000	0.000	71.57	0.00	0.00	0.00	0.00	0.00
75	SAGBEND	-285.39	-41.16	3.62	385.37	0.000	0.000	71.53	0.00	0.00	0.00	0.00	0.00
76	SAGBEND	-291.43	-41.52	3.16	391.42	0.000	0.000	71.50	0.00	0.00	0.00	0.00	0.00
77	SAGBEND	-297.47	-41.83	2.70	397.47	0.000	0.000	71.47	0.00	0.00	0.00	0.00	0.00
78	SAGBEND	-303.51	-42.09	2.24	403.52	0.000	0.000	71.44	0.00	0.00	0.00	0.00	0.00
79	SAGBEND	-309.56	-42.30	1.79	409.57	0.000	0.000	71.42	0.00	0.00	0.00	0.00	0.00
80	SAGBEND	-315.61	-42.47	1.33	415.62	0.000	0.000	71.41	0.00	0.00	0.00	0.00	0.00
81	SAGBEND	-321.66	-42.59	0.87	421.67	0.000	0.000	71.40	0.00	0.00	0.00	0.00	0.00
82	SAGBEND	-327.71	-42.65	0.42	427.72	0.007	0.000	71.39	-0.01	0.00	0.00	0.00	0.00
83	SEABED	-333.76	-42.67	0.02	433.77	0.350	0.000	71.39	-0.01	0.00	0.00	0.00	0.00
84	SEABED	-339.81	-42.67	0.00	439.82	0.564	0.000	71.39	0.00	0.00	0.00	0.00	0.00
85	SEABED	-345.86	-42.67	0.00	445.87	0.572	0.000	71.39	0.00	0.00	0.00	0.00	0.00
86	SEABED	-351.91	-42.67	0.00	451.92	0.572	0.000	71.39	0.00	0.00	0.00	0.00	0.00
87	SEABED	-357.96	-42.67	0.00	457.97	0.572	0.000	71.39	0.00	0.00	0.00	0.00	0.00
88	SEABED	-364.01	-42.67	0.00	464.02	0.572	0.000	71.39	0.00	0.00	0.00	0.00	0.00
89	SEABED	-370.06	-42.67	0.00	470.07	0.572	0.000	71.39	0.00	0.00	0.00	0.00	0.00
90	SEABED	-376.11	-42.67	0.00	476.12	0.572	0.000	71.39	0.00	0.00	0.00	0.00	0.00
91	SEABED	-382.16	-42.67	0.00	482.17	0.572	0.000	71.39	0.00	0.00	0.00	0.00	0.00
92	SEABED	-388.21	-42.67	0.00	488.22	0.572	0.000	71.39	0.00	0.00	0.00	0.00	0.00
93	SEABED	-394.26	-42.67	0.00	494.27	0.572	0.000	71.39	0.00	0.00	0.00	0.00	0.00
94	SEABED	-400.31	-42.67	0.00	500.32	0.572	0.000	71.39	0.00	0.00	0.00	0.00	0.00
95	SEABED	-406.36	-42.67	0.00	506.37	0.572	0.000	71.39	0.00	0.00	0.00	0.00	0.00
96	SEABED	-412.41	-42.67	0.00	512.42	0.572	0.000	71.39	0.00	0.00	0.00	0.00	0.00
97	SEABED	-418.46	-42.67	0.00	518.47	0.572	0.000	71.39	0.00	0.00	0.00	0.00	0.00
98	SEABED	-424.51	-42.67	0.00	524.52	0.572	0.000	71.39	0.00	0.00	0.00	0.00	0.00
99	SEABED	-430.56	-42.67	0.00	530.57	0.572	0.000	71.39	0.00	0.00	0.00	0.00	0.00
100	SEABED	-436.61	-42.67	0.00	536.62	0.572	0.000	71.39	0.00	0.00	0.00	0.00	0.00
101	SEABED	-442.66	-42.67	0.00	542.67	0.572	0.000	71.39	0.00	0.00	0.00	0.00	0.00
102	SEABED	-448.71	-42.67	0.00	548.72	0.572	0.000	71.39	0.00	0.00	0.00	0.00	0.00
103	SEABED	-454.76	-42.67	0.00	554.77	0.572	0.000	71.39	0.00	0.00	0.00	0.00	0.00
104	SEABED	-460.81	-42.67	0.00	560.82	0.572	0.000	71.39	0.00	0.00	0.00	0.00	0.00

S T A T I C P I P E C O O R D I N A T E S, F O R C E S A N D S T R E S S E S

NODE NO.	PIPE SECTION	X COORD (M)	Y COORD (M)	VERT ANGLE (DEG)	PIPE LENGTH (M)	SUPPORT REACTION (KN)	SEPARA -TION (M)	AXIAL TENSION (KN)	BENDING MOMENT (KN-M)	TENSILE STRESS (MPA)	BENDING STRESS (MPA)	TOTAL STRESS (MPA)	PERCNT YIELD (PCT)
105	SEABED	-466.86	-42.67	0.00	566.87	0.572	0.000	71.39	0.00	0.00	0.00	0.00	0.00
106	SEABED	-472.91	-42.67	0.00	572.92	0.572	0.000	71.39	0.00	0.00	0.00	0.00	0.00
107	SEABED	-478.96	-42.67	0.00	578.97	0.572	0.000	71.39	0.00	0.00	0.00	0.00	0.00
108	SEABED	-485.01	-42.67	0.00	585.02	0.572	0.000	71.39	0.00	0.00	0.00	0.00	0.00
109	SEABED	-491.06	-42.67	0.00	591.07	0.572	0.000	71.39	0.00	0.00	0.00	0.00	0.00
110	SEABED	-497.11	-42.67	0.00	597.12	0.572	0.000	71.39	0.00	0.00	0.00	0.00	0.00
111	SEABED	-503.16	-42.67	0.00	603.17	0.572	0.000	71.39	0.00	0.00	0.00	0.00	0.00
112	SEABED	-509.21	-42.67	0.00	609.22	0.572	0.000	71.39	0.00	0.00	0.00	0.00	0.00
113	SEABED	-515.26	-42.67	0.00	615.27	0.572	0.000	71.39	0.00	0.00	0.00	0.00	0.00
114	SEABED	-521.31	-42.67	0.00	621.32	0.572	0.000	71.39	0.00	0.00	0.00	0.00	0.00
115	SEABED	-527.36	-42.67	0.00	627.37	0.572	0.000	71.39	0.00	0.00	0.00	0.00	0.00
116	SEABED	-533.41	-42.67	0.00	633.42	0.572	0.000	71.39	0.00	0.00	0.00	0.00	0.00
117	SEABED	-539.46	-42.67	0.00	639.47	0.572	0.000	71.39	0.00	0.00	0.00	0.00	0.00
118	SEABED	-545.51	-42.67	0.00	645.52	0.572	0.000	71.39	0.00	0.00	0.00	0.00	0.00
119	SEABED	-551.56	-42.67	0.00	651.57	0.572	0.000	71.39	0.00	0.00	0.00	0.00	0.00
120	SEABED	-557.61	-42.67	0.00	657.62	0.572	0.000	71.39	0.00	0.00	0.00	0.00	0.00
121	SEABED	-563.66	-42.67	0.00	663.67	0.572	0.000	71.39	0.00	0.00	0.00	0.00	0.00
122	SEABED	-569.71	-42.67	0.00	669.72	0.572	0.000	71.39	0.00	0.00	0.00	0.00	0.00
123	SEABED	-575.76	-42.67	0.00	675.77	0.572	0.000	71.39	0.00	0.00	0.00	0.00	0.00
124	SEABED	-581.81	-42.67	0.00	681.82	0.572	0.000	71.39	0.00	0.00	0.00	0.00	0.00
125	SEABED	-587.86	-42.67	0.00	687.87	0.571	0.000	71.39	0.00	0.00	0.00	0.00	0.00
126	SEABED	-593.91	-42.67	0.00	693.92	0.423	0.000	71.39	0.00	0.00	0.00	0.00	0.00
127	SEABED	-597.00	-42.67	-0.02	697.01	0.238	0.000	71.39	0.00	0.00	0.00	0.00	0.00
128	SEABED	-600.09	-42.67	-0.12	700.10	0.000	0.000	71.39	0.00	0.00	0.00	0.00	0.00

S T A T I C P I P E C O O R D I N A T E S, F O R C E S A N D S T R E S S E S

NODE NO.	PIPE SECTION	X COORD (M)	Y COORD (M)	VERT ANGLE (DEG)	PIPE LENGTH (M)	SUPPORT REACTION (KN)	SEPARA -TION (M)	AXIAL TENSION (KN)	BENDING MOMENT (KN-M)	TENSILE STRESS (MPA)	BENDING STRESS (MPA)	TOTAL STRESS (MPA)	PERCNT YIELD (PCT)
1	LAYBARGE	96.31	6.41	1.93	0.00	9.949	0.000	0.00	2.75	0.00	4.25	4.25	1.18
3	LAYBARGE	84.28	6.05	1.58	12.04	24.029	0.000	-0.73	-19.03	-0.07	-29.46	29.53	8.20
5	LAYBARGE	73.45	5.73	1.91	22.87	24.785	0.000	-1.40	-30.21	-0.13	-46.77	46.90	13.03
7	TENSIONR	60.11	5.24	2.27	36.23	30.545	0.000	82.63	-21.37	7.96	-33.09	41.05	11.40
9	LAYBARGE	51.10	4.87	2.21	45.24	0.000	0.000	81.91	23.06	7.89	35.70	43.58	12.11
10	LAYBARGE	46.45	4.70	2.05	49.89	18.136	0.000	81.58	0.71	7.86	1.10	8.96	2.49
12	LAYBARGE	35.36	4.31	2.12	60.99	12.835	0.000	80.77	-32.42	7.78	-50.18	57.96	16.10
14	LAYBARGE	23.34	3.62	5.42	73.04	65.713	0.000	78.24	-211.53	7.53	-327.47	335.01	93.06
16	LAYBARGE	19.27	3.17	7.16	77.13	0.000	0.000	78.24	-108.17	7.53	-167.46	174.99	48.61
17	LAYBARGE	8.90	1.76	7.68	87.59	16.078	0.000	75.65	36.48	7.28	56.48	63.76	17.71
19	LAYBARGE	4.90	1.24	7.00	91.63	0.000	0.000	74.43	94.57	7.17	146.41	153.57	42.66
20	LAYBARGE	3.07	1.02	6.50	93.47	0.000	0.405	73.91	113.80	7.12	176.18	183.29	50.91
24	STINGER	-7.47	0.15	2.93	104.04	0.000	0.476	72.12	120.64	6.94	186.77	193.71	53.81
26	STINGER	-16.58	-0.15	1.31	113.17	21.104	0.000	72.00	0.00	6.92	0.00	6.93	1.93
29	STINGER	-26.48	-0.61	4.49	123.07	4.620	0.000	71.98	0.00	0.00	0.00	0.00	0.00
31	STINGER	-37.34	-1.81	8.17	134.01	4.678	0.000	71.97	0.00	0.00	0.00	0.00	0.00
33	STINGER	-40.32	-2.34	10.02	137.03	0.000	0.257	72.01	0.00	0.00	0.00	0.00	0.00
35	SAGBEND	-46.59	-3.44	10.00	143.39	0.000	0.000	72.01	0.00	0.00	0.00	0.00	0.00
36	SAGBEND	-52.55	-4.49	9.98	149.44	0.000	0.000	72.00	0.00	0.00	0.00	0.00	0.00
37	SAGBEND	-58.50	-5.54	9.97	155.49	0.000	0.000	72.00	0.00	0.00	0.00	0.00	0.00
38	SAGBEND	-64.46	-6.59	9.96	161.54	0.000	0.000	72.00	0.00	0.00	0.00	0.00	0.00
39	SAGBEND	-70.42	-7.64	9.95	167.59	0.000	0.000	72.00	0.00	0.00	0.00	0.00	0.00
40	SAGBEND	-76.38	-8.68	9.93	173.64	0.000	0.000	71.99	0.00	0.00	0.00	0.00	0.00
41	SAGBEND	-82.34	-9.72	9.92	179.69	0.000	0.000	71.99	0.00	0.00	0.00	0.00	0.00
42	SAGBEND	-88.30	-10.76	9.91	185.74	0.000	0.000	71.99	0.00	0.00	0.00	0.00	0.00
43	SAGBEND	-94.26	-11.81	9.90	191.79	0.000	0.000	71.98	0.00	0.00	0.00	0.00	0.00
44	SAGBEND	-100.22	-12.84	9.88	197.84	0.000	0.000	71.98	0.00	0.00	0.00	0.00	0.00
45	SAGBEND	-106.18	-13.88	9.87	203.89	0.000	0.000	71.98	0.00	0.00	0.00	0.00	0.00
46	SAGBEND	-112.14	-14.92	9.86	209.94	0.000	0.000	71.98	0.00	0.00	0.00	0.00	0.00
47	SAGBEND	-118.10	-15.95	9.85	215.99	0.000	0.000	71.97	0.00	0.00	0.00	0.00	0.00
48	SAGBEND	-124.06	-16.99	9.84	222.04	0.000	0.000	71.97	0.00	0.00	0.00	0.00	0.00
49	SAGBEND	-130.02	-18.02	9.82	228.09	0.000	0.000	71.97	0.00	0.00	0.00	0.00	0.00
50	SAGBEND	-135.98	-19.05	9.81	234.14	0.000	0.000	71.97	0.00	0.00	0.00	0.00	0.00
51	SAGBEND	-141.95	-20.08	9.80	240.19	0.000	0.000	71.96	0.00	0.00	0.00	0.00	0.00
52	SAGBEND	-147.91	-21.11	9.79	246.24	0.000	0.000	71.96	0.00	0.00	0.00	0.00	0.00
53	SAGBEND	-153.87	-22.14	9.77	252.29	0.000	0.000	71.96	0.00	0.00	0.00	0.00	0.00
54	SAGBEND	-159.83	-23.17	9.76	258.34	0.000	0.000	71.96	0.00	0.00	0.00	0.00	0.00
55	SAGBEND	-165.80	-24.19	9.75	264.39	0.000	0.000	71.95	0.00	0.00	0.00	0.00	0.00
56	SAGBEND	-171.76	-25.21	9.74	270.44	0.000	0.000	71.95	0.00	0.00	0.00	0.00	0.00
57	SAGBEND	-177.72	-26.24	9.72	276.49	0.000	0.000	71.95	0.00	0.00	0.00	0.00	0.00
58	SAGBEND	-183.68	-27.26	9.71	282.54	0.000	0.000	71.94	0.00	0.00	0.00	0.00	0.00
59	SAGBEND	-189.65	-28.28	9.70	288.59	0.000	0.000	71.94	0.00	0.00	0.00	0.00	0.00
60	SAGBEND	-195.61	-29.30	9.69	294.64	0.000	0.000	71.94	0.00	0.00	0.00	0.00	0.00

S T A T I C P I P E C O O R D I N A T E S, F O R C E S A N D S T R E S S E S

NODE NO.	PIPE SECTION	X COORD (M)	Y COORD (M)	VERT ANGLE (DEG)	PIPE LENGTH (M)	SUPPORT REACTION (KN)	SEPARA -TION (M)	AXIAL TENSION (KN)	BENDING MOMENT (KN-M)	TENSILE STRESS (MPA)	BENDING STRESS (MPA)	TOTAL STRESS (MPA)	PERCNT YIELD (PCT)
61	SAGBEND	-201.58	-30.31	9.67	300.69	0.000	0.000	71.94	0.00	0.00	0.00	0.00	0.00
62	SAGBEND	-207.54	-31.33	9.66	306.74	0.000	0.000	71.93	0.00	0.00	0.00	0.00	0.00
63	SAGBEND	-210.87	-31.90	9.65	310.12	0.000	0.000	71.93	0.00	0.00	0.00	0.00	0.00
64	SAGBEND	-215.17	-32.62	9.33	314.48	0.000	0.000	71.86	0.00	0.00	0.00	0.00	0.00
65	SAGBEND	-219.48	-33.31	9.01	318.84	0.000	0.000	71.80	0.00	0.00	0.00	0.00	0.00
66	SAGBEND	-225.46	-34.23	8.55	324.89	0.000	0.000	71.71	0.00	0.00	0.00	0.00	0.00
67	SAGBEND	-231.44	-35.11	8.10	330.94	0.000	0.000	71.63	0.00	0.00	0.00	0.00	0.00
68	SAGBEND	-237.43	-35.94	7.65	336.99	0.000	0.000	71.55	0.00	0.00	0.00	0.00	0.00
69	SAGBEND	-243.43	-36.72	7.19	343.04	0.000	0.000	71.48	0.00	0.00	0.00	0.00	0.00
70	SAGBEND	-249.44	-37.45	6.74	349.09	0.000	0.000	71.41	0.00	0.00	0.00	0.00	0.00
71	SAGBEND	-255.45	-38.14	6.28	355.14	0.000	0.000	71.34	0.00	0.00	0.00	0.00	0.00
72	SAGBEND	-261.47	-38.78	5.83	361.19	0.000	0.000	71.28	0.00	0.00	0.00	0.00	0.00
73	SAGBEND	-267.49	-39.37	5.37	367.24	0.000	0.000	71.23	0.00	0.00	0.00	0.00	0.00
74	SAGBEND	-273.51	-39.91	4.91	373.29	0.000	0.000	71.17	0.00	0.00	0.00	0.00	0.00
75	SAGBEND	-279.54	-40.40	4.45	379.34	0.000	0.000	71.13	0.00	0.00	0.00	0.00	0.00
76	SAGBEND	-285.58	-40.85	3.99	385.39	0.000	0.000	71.09	0.00	0.00	0.00	0.00	0.00
77	SAGBEND	-291.61	-41.25	3.53	391.44	0.000	0.000	71.05	0.00	0.00	0.00	0.00	0.00
78	SAGBEND	-297.65	-41.59	3.07	397.49	0.000	0.000	71.02	0.00	0.00	0.00	0.00	0.00
79	SAGBEND	-303.70	-41.89	2.61	403.54	0.000	0.000	70.99	0.00	0.00	0.00	0.00	0.00
80	SAGBEND	-309.74	-42.14	2.15	409.59	0.000	0.000	70.96	0.00	0.00	0.00	0.00	0.00
81	SAGBEND	-315.79	-42.35	1.69	415.64	0.000	0.000	70.94	0.00	0.00	0.00	0.00	0.00
82	SAGBEND	-321.84	-42.50	1.22	421.69	0.000	0.000	70.93	0.00	0.00	0.00	0.00	0.00
83	SAGBEND	-327.88	-42.61	0.76	427.74	0.000	0.000	70.92	0.00	0.00	0.00	0.00	0.00
84	SAGBEND	-333.93	-42.66	0.30	433.79	0.038	0.000	70.91	-0.01	0.00	0.00	0.00	0.00
85	SEABED	-339.98	-42.67	0.01	439.84	0.453	0.000	70.91	0.00	0.00	0.00	0.00	0.00
86	SEABED	-346.03	-42.67	0.00	445.89	0.569	0.000	70.91	0.00	0.00	0.00	0.00	0.00
87	SEABED	-352.08	-42.67	0.00	451.94	0.572	0.000	70.91	0.00	0.00	0.00	0.00	0.00
88	SEABED	-358.13	-42.67	0.00	457.99	0.572	0.000	70.91	0.00	0.00	0.00	0.00	0.00
89	SEABED	-364.18	-42.67	0.00	464.04	0.572	0.000	70.91	0.00	0.00	0.00	0.00	0.00
90	SEABED	-370.23	-42.67	0.00	470.09	0.572	0.000	70.91	0.00	0.00	0.00	0.00	0.00
91	SEABED	-376.28	-42.67	0.00	476.14	0.572	0.000	70.91	0.00	0.00	0.00	0.00	0.00
92	SEABED	-382.33	-42.67	0.00	482.19	0.572	0.000	70.91	0.00	0.00	0.00	0.00	0.00
93	SEABED	-388.38	-42.67	0.00	488.24	0.572	0.000	70.91	0.00	0.00	0.00	0.00	0.00
94	SEABED	-394.43	-42.67	0.00	494.29	0.572	0.000	70.91	0.00	0.00	0.00	0.00	0.00
95	SEABED	-400.48	-42.67	0.00	500.34	0.572	0.000	70.91	0.00	0.00	0.00	0.00	0.00
96	SEABED	-406.53	-42.67	0.00	506.39	0.572	0.000	70.91	0.00	0.00	0.00	0.00	0.00
97	SEABED	-412.58	-42.67	0.00	512.44	0.572	0.000	70.91	0.00	0.00	0.00	0.00	0.00
98	SEABED	-418.63	-42.67	0.00	518.49	0.572	0.000	70.91	0.00	0.00	0.00	0.00	0.00
99	SEABED	-424.68	-42.67	0.00	524.54	0.572	0.000	70.91	0.00	0.00	0.00	0.00	0.00
100	SEABED	-430.73	-42.67	0.00	530.59	0.572	0.000	70.91	0.00	0.00	0.00	0.00	0.00
101	SEABED	-436.78	-42.67	0.00	536.64	0.572	0.000	70.91	0.00	0.00	0.00	0.00	0.00
102	SEABED	-442.83	-42.67	0.00	542.69	0.572	0.000	70.91	0.00	0.00	0.00	0.00	0.00
103	SEABED	-448.88	-42.67	0.00	548.74	0.572	0.000	70.91	0.00	0.00	0.00	0.00	0.00
104	SEABED	-454.93	-42.67	0.00	554.79	0.572	0.000	70.91	0.00	0.00	0.00	0.00	0.00

S T A T I C P I P E C O O R D I N A T E S, F O R C E S A N D S T R E S S E S

NODE NO.	PIPE SECTION	X COORD (M)	Y COORD (M)	VERT ANGLE (DEG)	PIPE LENGTH (M)	SUPPORT REACTION (KN)	SEPARA -TION (M)	AXIAL TENSION (KN)	BENDING MOMENT (KN-M)	TENSILE STRESS (MPA)	BENDING STRESS (MPA)	TOTAL STRESS (MPA)	PERCNT YIELD (PCT)
105	SEABED	-460.98	-42.67	0.00	560.84	0.572	0.000	70.91	0.00	0.00	0.00	0.00	0.00
106	SEABED	-467.03	-42.67	0.00	566.89	0.572	0.000	70.91	0.00	0.00	0.00	0.00	0.00
107	SEABED	-473.08	-42.67	0.00	572.94	0.572	0.000	70.91	0.00	0.00	0.00	0.00	0.00
108	SEABED	-479.13	-42.67	0.00	578.99	0.572	0.000	70.91	0.00	0.00	0.00	0.00	0.00
109	SEABED	-485.18	-42.67	0.00	585.04	0.572	0.000	70.91	0.00	0.00	0.00	0.00	0.00
110	SEABED	-491.23	-42.67	0.00	591.09	0.572	0.000	70.91	0.00	0.00	0.00	0.00	0.00
111	SEABED	-497.28	-42.67	0.00	597.14	0.572	0.000	70.91	0.00	0.00	0.00	0.00	0.00
112	SEABED	-503.33	-42.67	0.00	603.19	0.572	0.000	70.91	0.00	0.00	0.00	0.00	0.00
113	SEABED	-509.38	-42.67	0.00	609.24	0.572	0.000	70.91	0.00	0.00	0.00	0.00	0.00
114	SEABED	-515.43	-42.67	0.00	615.29	0.572	0.000	70.91	0.00	0.00	0.00	0.00	0.00
115	SEABED	-521.48	-42.67	0.00	621.34	0.572	0.000	70.91	0.00	0.00	0.00	0.00	0.00
116	SEABED	-527.53	-42.67	0.00	627.39	0.572	0.000	70.91	0.00	0.00	0.00	0.00	0.00
117	SEABED	-533.58	-42.67	0.00	633.44	0.572	0.000	70.91	0.00	0.00	0.00	0.00	0.00
118	SEABED	-539.63	-42.67	0.00	639.49	0.572	0.000	70.91	0.00	0.00	0.00	0.00	0.00
119	SEABED	-545.68	-42.67	0.00	645.54	0.572	0.000	70.91	0.00	0.00	0.00	0.00	0.00
120	SEABED	-551.73	-42.67	0.00	651.59	0.572	0.000	70.91	0.00	0.00	0.00	0.00	0.00
121	SEABED	-557.78	-42.67	0.00	657.64	0.572	0.000	70.91	0.00	0.00	0.00	0.00	0.00
122	SEABED	-563.83	-42.67	0.00	663.69	0.572	0.000	70.91	0.00	0.00	0.00	0.00	0.00
123	SEABED	-569.88	-42.67	0.00	669.74	0.572	0.000	70.91	0.00	0.00	0.00	0.00	0.00
124	SEABED	-575.93	-42.67	0.00	675.79	0.572	0.000	70.91	0.00	0.00	0.00	0.00	0.00
125	SEABED	-581.98	-42.67	0.00	681.84	0.572	0.000	70.91	0.00	0.00	0.00	0.00	0.00
126	SEABED	-588.04	-42.67	0.00	687.89	0.572	0.000	70.91	0.00	0.00	0.00	0.00	0.00
127	SEABED	-594.09	-42.67	0.00	693.94	0.572	0.000	70.91	0.00	0.00	0.00	0.00	0.00
128	SEABED	-600.14	-42.67	0.00	699.99	0.569	0.000	70.91	0.00	0.00	0.00	0.00	0.00
129	SEABED	-606.19	-42.67	-0.01	706.04	0.432	0.000	70.91	0.00	0.00	0.00	0.00	0.00
130	SEABED	-610.27	-42.67	-0.12	710.13	0.000	0.000	70.91	0.00	0.00	0.00	0.00	0.00

S T A T I C P I P E C O O R D I N A T E S, F O R C E S A N D S T R E S S E S

NODE NO.	PIPE SECTION	X COORD (M)	Y COORD (M)	VERT ANGLE (DEG)	PIPE LENGTH (M)	SUPPORT REACTION (KN)	SEPARA -TION (M)	AXIAL TENSION (KN)	BENDING MOMENT (KN-M)	TENSILE STRESS (MPA)	BENDING STRESS (MPA)	TOTAL STRESS (MPA)	PERCNT YIELD (PCT)
1	LAYBARGE	96.31	6.41	1.93	0.00	9.949	0.000	0.00	2.75	0.00	4.26	4.26	1.18
3	LAYBARGE	84.28	6.05	1.58	12.04	24.027	0.000	-0.73	-19.03	-0.07	-29.45	29.52	8.20
5	LAYBARGE	73.45	5.73	1.91	22.87	24.790	0.000	-1.40	-30.22	-0.13	-46.78	46.92	13.03
7	TENSIONR	60.11	5.24	2.27	36.23	30.554	0.000	98.23	-21.33	9.46	-33.03	42.48	11.80
9	LAYBARGE	51.10	4.87	2.21	45.24	0.000	0.000	97.51	22.97	9.39	35.57	44.96	12.49
10	LAYBARGE	46.45	4.70	2.05	49.89	17.995	0.000	97.18	0.86	9.36	1.33	10.69	2.97
12	LAYBARGE	35.36	4.31	2.12	60.99	13.171	0.000	96.36	-32.57	9.28	-50.42	59.70	16.58
14	LAYBARGE	23.34	3.62	5.42	73.04	66.994	0.000	93.82	-212.42	9.03	-328.86	337.90	93.86
16	LAYBARGE	19.27	3.17	7.16	77.13	0.000	0.000	93.84	-107.94	9.04	-167.11	176.14	48.93
17	LAYBARGE	8.90	1.76	7.67	87.59	15.143	0.000	91.25	36.52	8.79	56.54	65.32	18.14

19	LAYBARGE	4.89	1.24	7.01	91.63	0.000	0.000	90.04	91.48	8.67	141.63	150.30	41.75
20	LAYBARGE	3.09	1.03	6.53	93.45	0.000	0.404	89.53	109.27	8.62	169.17	177.79	49.39
24	STINGER	-7.45	0.13	3.13	104.03	0.000	0.479	87.72	113.39	8.45	175.55	183.99	51.11
26	STINGER	-16.59	-0.21	1.62	113.17	20.033	0.000	87.53	0.00	8.42	0.00	8.43	2.34
29	STINGER	-26.48	-0.73	4.86	123.08	5.725	0.000	87.51	0.00	0.00	0.00	0.00	0.00
31	STINGER	-37.34	-2.01	8.13	134.01	4.315	0.000	87.52	0.00	0.00	0.00	0.00	0.00
33	STINGER	-40.32	-2.51	9.52	137.04	0.000	0.304	87.55	0.00	0.00	0.00	0.00	0.00
35	SAGBEND	-46.59	-3.56	9.51	143.39	0.000	0.000	87.55	0.00	0.00	0.00	0.00	0.00
36	SAGBEND	-52.55	-4.56	9.50	149.44	0.000	0.000	87.54	0.00	0.00	0.00	0.00	0.00
37	SAGBEND	-58.52	-5.56	9.49	155.49	0.000	0.000	87.54	0.00	0.00	0.00	0.00	0.00
38	SAGBEND	-64.49	-6.55	9.48	161.54	0.000	0.000	87.54	0.00	0.00	0.00	0.00	0.00
39	SAGBEND	-70.46	-7.55	9.47	167.59	0.000	0.000	87.54	0.00	0.00	0.00	0.00	0.00
40	SAGBEND	-76.42	-8.54	9.46	173.64	0.000	0.000	87.53	0.00	0.00	0.00	0.00	0.00
41	SAGBEND	-82.39	-9.54	9.45	179.69	0.000	0.000	87.53	0.00	0.00	0.00	0.00	0.00
42	SAGBEND	-88.36	-10.53	9.44	185.74	0.000	0.000	87.53	0.00	0.00	0.00	0.00	0.00
43	SAGBEND	-94.33	-11.52	9.43	191.79	0.000	0.000	87.53	0.00	0.00	0.00	0.00	0.00
44	SAGBEND	-100.30	-12.51	9.42	197.84	0.000	0.000	87.52	0.00	0.00	0.00	0.00	0.00
45	SAGBEND	-106.26	-13.50	9.41	203.89	0.000	0.000	87.52	0.00	0.00	0.00	0.00	0.00
46	SAGBEND	-112.23	-14.49	9.40	209.94	0.000	0.000	87.52	0.00	0.00	0.00	0.00	0.00
47	SAGBEND	-118.20	-15.48	9.39	215.99	0.000	0.000	87.52	0.00	0.00	0.00	0.00	0.00
48	SAGBEND	-124.17	-16.46	9.38	222.04	0.000	0.000	87.51	0.00	0.00	0.00	0.00	0.00
49	SAGBEND	-130.14	-17.45	9.37	228.09	0.000	0.000	87.51	0.00	0.00	0.00	0.00	0.00
50	SAGBEND	-136.11	-18.43	9.36	234.14	0.000	0.000	87.51	0.00	0.00	0.00	0.00	0.00
51	SAGBEND	-142.08	-19.42	9.35	240.19	0.000	0.000	87.50	0.00	0.00	0.00	0.00	0.00
52	SAGBEND	-148.05	-20.40	9.33	246.24	0.000	0.000	87.50	0.00	0.00	0.00	0.00	0.00
53	SAGBEND	-154.02	-21.38	9.32	252.29	0.000	0.000	87.50	0.00	0.00	0.00	0.00	0.00
54	SAGBEND	-159.99	-22.36	9.31	258.34	0.000	0.000	87.50	0.00	0.00	0.00	0.00	0.00
55	SAGBEND	-165.96	-23.34	9.30	264.39	0.000	0.000	87.49	0.00	0.00	0.00	0.00	0.00
56	SAGBEND	-171.93	-24.31	9.29	270.44	0.000	0.000	87.49	0.00	0.00	0.00	0.00	0.00
57	SAGBEND	-177.90	-25.29	9.28	276.49	0.000	0.000	87.49	0.00	0.00	0.00	0.00	0.00
58	SAGBEND	-183.87	-26.27	9.27	282.54	0.000	0.000	87.49	0.00	0.00	0.00	0.00	0.00
59	SAGBEND	-189.84	-27.24	9.26	288.59	0.000	0.000	87.48	0.00	0.00	0.00	0.00	0.00
60	SAGBEND	-195.81	-28.21	9.25	294.64	0.000	0.000	87.48	0.00	0.00	0.00	0.00	0.00

S T A T I C P I P E C O O R D I N A T E S, F O R C E S A N D S T R E S S E S

NODE NO.	PIPE SECTION	X COORD (M)	Y COORD (M)	VERT ANGLE (DEG)	PIPE LENGTH (M)	SUPPORT REACTION (KN)	SEPARA -TION (M)	AXIAL TENSION (KN)	BENDING MOMENT (KN-M)	TENSILE STRESS (MPA)	BENDING STRESS (MPA)	TOTAL STRESS (MPA)	PERCNT YIELD (PCT)
61	SAGBEND	-201.79	-29.19	9.24	300.69	0.000	0.000	87.48	0.00	0.00	0.00	0.00	0.00
62	SAGBEND	-207.76	-30.16	9.23	306.74	0.000	0.000	87.48	0.00	0.00	0.00	0.00	0.00
63	SAGBEND	-211.09	-30.70	9.23	310.12	0.000	0.000	87.48	0.00	0.00	0.00	0.00	0.00
64	SAGBEND	-215.40	-31.39	8.96	314.48	0.000	0.000	87.41	0.00	0.00	0.00	0.00	0.00
65	SAGBEND	-219.71	-32.06	8.69	318.84	0.000	0.000	87.35	0.00	0.00	0.00	0.00	0.00
66	SAGBEND	-225.69	-32.95	8.32	324.89	0.000	0.000	87.26	0.00	0.00	0.00	0.00	0.00
67	SAGBEND	-231.68	-33.81	7.95	330.94	0.000	0.000	87.18	0.00	0.00	0.00	0.00	0.00
68	SAGBEND	-237.67	-34.63	7.58	336.99	0.000	0.000	87.10	0.00	0.00	0.00	0.00	0.00
69	SAGBEND	-243.67	-35.40	7.20	343.04	0.000	0.000	87.03	0.00	0.00	0.00	0.00	0.00
70	SAGBEND	-249.68	-36.14	6.83	349.09	0.000	0.000	86.96	0.00	0.00	0.00	0.00	0.00
71	SAGBEND	-255.69	-36.84	6.46	355.14	0.000	0.000	86.89	0.00	0.00	0.00	0.00	0.00
72	SAGBEND	-261.70	-37.50	6.08	361.19	0.000	0.000	86.83	0.00	0.00	0.00	0.00	0.00
73	SAGBEND	-267.72	-38.13	5.71	367.24	0.000	0.000	86.77	0.00	0.00	0.00	0.00	0.00
74	SAGBEND	-273.74	-38.71	5.33	373.29	0.000	0.000	86.72	0.00	0.00	0.00	0.00	0.00
75	SAGBEND	-279.77	-39.25	4.95	379.34	0.000	0.000	86.67	0.00	0.00	0.00	0.00	0.00
76	SAGBEND	-285.80	-39.75	4.58	385.39	0.000	0.000	86.62	0.00	0.00	0.00	0.00	0.00
77	SAGBEND	-291.83	-40.21	4.20	391.44	0.000	0.000	86.58	0.00	0.00	0.00	0.00	0.00
78	SAGBEND	-297.86	-40.64	3.82	397.49	0.000	0.000	86.54	0.00	0.00	0.00	0.00	0.00
79	SAGBEND	-303.90	-41.02	3.44	403.54	0.000	0.000	86.50	0.00	0.00	0.00	0.00	0.00
80	SAGBEND	-309.94	-41.36	3.06	409.59	0.000	0.000	86.47	0.00	0.00	0.00	0.00	0.00
81	SAGBEND	-315.98	-41.67	2.69	415.64	0.000	0.000	86.44	0.00	0.00	0.00	0.00	0.00
82	SAGBEND	-322.03	-41.93	2.31	421.69	0.000	0.000	86.41	0.00	0.00	0.00	0.00	0.00
83	SAGBEND	-328.07	-42.15	1.93	427.74	0.000	0.000	86.39	0.00	0.00	0.00	0.00	0.00
84	SAGBEND	-334.12	-42.34	1.55	433.79	0.000	0.000	86.38	0.00	0.00	0.00	0.00	0.00
85	SAGBEND	-340.17	-42.48	1.17	439.84	0.000	0.000	86.36	0.00	0.00	0.00	0.00	0.00
86	SAGBEND	-346.22	-42.58	0.79	445.89	0.000	0.000	86.35	0.00	0.00	0.00	0.00	0.00
87	SAGBEND	-352.27	-42.65	0.41	451.94	0.001	0.000	86.35	0.00	0.00	0.00	0.00	0.00
88	SEABED	-358.32	-42.67	0.05	457.99	0.258	0.000	86.34	0.00	0.00	0.00	0.00	0.00
89	SEABED	-364.37	-42.67	0.00	464.04	0.553	0.000	86.34	0.00	0.00	0.00	0.00	0.00
90	SEABED	-370.42	-42.67	0.00	470.09	0.571	0.000	86.34	0.00	0.00	0.00	0.00	0.00
91	SEABED	-376.47	-42.67	0.00	476.14	0.572	0.000	86.34	0.00	0.00	0.00	0.00	0.00
92	SEABED	-382.52	-42.67	0.00	482.19	0.572	0.000	86.34	0.00	0.00	0.00	0.00	0.00
93	SEABED	-388.57	-42.67	0.00	488.24	0.572	0.000	86.34	0.00	0.00	0.00	0.00	0.00
94	SEABED	-394.62	-42.67	0.00	494.29	0.572	0.000	86.34	0.00	0.00	0.00	0.00	0.00
95	SEABED	-400.67	-42.67	0.00	500.34	0.572	0.000	86.34	0.00	0.00	0.00	0.00	0.00
96	SEABED	-406.72	-42.67	0.00	506.39	0.572	0.000	86.34	0.00	0.00	0.00	0.00	0.00
97	SEABED	-412.77	-42.67	0.00	512.44	0.572	0.000	86.34	0.00	0.00	0.00	0.00	0.00
98	SEABED	-418.82	-42.67	0.00	518.49	0.572	0.000	86.34	0.00	0.00	0.00	0.00	0.00
99	SEABED	-424.87	-42.67	0.00	524.54	0.572	0.000	86.34	0.00	0.00	0.00	0.00	0.00
100	SEABED	-430.92	-42.67	0.00	530.59	0.572	0.000	86.34	0.00	0.00	0.00	0.00	0.00
101	SEABED	-436.97	-42.67	0.00	536.64	0.572	0.000	86.34	0.00	0.00	0.00	0.00	0.00
102	SEABED	-443.02	-42.67	0.00	542.69	0.572	0.000	86.34	0.00	0.00	0.00	0.00	0.00
103	SEABED	-449.07	-42.67	0.00	548.74	0.572	0.000	86.34	0.00	0.00	0.00	0.00	0.00
104	SEABED	-455.12	-42.67	0.00	554.79	0.572	0.000	86.34	0.00	0.00	0.00	0.00	0.00

S T A T I C P I P E C O O R D I N A T E S, F O R C E S A N D S T R E S S E S

NODE NO.	PIPE SECTION	X COORD (M)	Y COORD (M)	VERT ANGLE (DEG)	PIPE LENGTH (M)	SUPPORT REACTION (KN)	SEPARA -TION (M)	AXIAL TENSION (KN)	BENDING MOMENT (KN-M)	TENSILE STRESS (MPA)	BENDING STRESS (MPA)	TOTAL STRESS (MPA)	PERCNT YIELD (PCT)
105	SEABED	-461.17	-42.67	0.00	560.84	0.572	0.000	86.34	0.00	0.00	0.00	0.00	0.00
106	SEABED	-467.22	-42.67	0.00	566.89	0.572	0.000	86.34	0.00	0.00	0.00	0.00	0.00
107	SEABED	-473.27	-42.67	0.00	572.94	0.572	0.000	86.34	0.00	0.00	0.00	0.00	0.00
108	SEABED	-479.32	-42.67	0.00	578.99	0.572	0.000	86.34	0.00	0.00	0.00	0.00	0.00
109	SEABED	-485.37	-42.67	0.00	585.04	0.572	0.000	86.34	0.00	0.00	0.00	0.00	0.00
110	SEABED	-491.42	-42.67	0.00	591.09	0.572	0.000	86.34	0.00	0.00	0.00	0.00	0.00
111	SEABED	-497.47	-42.67	0.00	597.14	0.572	0.000	86.34	0.00	0.00	0.00	0.00	0.00
112	SEABED	-503.52	-42.67	0.00	603.19	0.572	0.000	86.34	0.00	0.00	0.00	0.00	0.00
113	SEABED	-509.57	-42.67	0.00	609.24	0.572	0.000	86.34	0.00	0.00	0.00	0.00	0.00
114	SEABED	-515.62	-42.67	0.00	615.29	0.572	0.000	86.34	0.00	0.00	0.00	0.00	0.00
115	SEABED	-521.67	-42.67	0.00	621.34	0.572	0.000	86.34	0.00	0.00	0.00	0.00	0.00
116	SEABED	-527.72	-42.67	0.00	627.39	0.572	0.000	86.34	0.00	0.00	0.00	0.00	0.00
117	SEABED	-533.77	-42.67	0.00	633.44	0.572	0.000	86.34	0.00	0.00	0.00	0.00	0.00
118	SEABED	-539.82	-42.67	0.00	639.49	0.572	0.000	86.34	0.00	0.00	0.00	0.00	0.00
119	SEABED	-545.87	-42.67	0.00	645.54	0.572	0.000	86.34	0.00	0.00	0.00	0.00	0.00
120	SEABED	-551.92	-42.67	0.00	651.59	0.572	0.000	86.34	0.00	0.00	0.00	0.00	0.00
121	SEABED	-557.97	-42.67	0.00	657.64	0.572	0.000	86.34	0.00	0.00	0.00	0.00	0.00
122	SEABED	-564.02	-42.67	0.00	663.69	0.572	0.000	86.34	0.00	0.00	0.00	0.00	0.00
123	SEABED	-570.07	-42.67	0.00	669.74	0.572	0.000	86.34	0.00	0.00	0.00	0.00	0.00
124	SEABED	-576.12	-42.67	0.00	675.79	0.572	0.000	86.34	0.00	0.00	0.00	0.00	0.00
125	SEABED	-582.17	-42.67	0.00	681.84	0.572	0.000	86.34	0.00	0.00	0.00	0.00	0.00
126	SEABED	-588.22	-42.67	0.00	687.89	0.572	0.000	86.34	0.00	0.00	0.00	0.00	0.00
127	SEABED	-594.27	-42.67	0.00	693.94	0.572	0.000	86.34	0.00	0.00	0.00	0.00	0.00
128	SEABED	-600.32	-42.67	0.00	699.99	0.568	0.000	86.34	0.00	0.00	0.00	0.00	0.00
129	SEABED	-606.37	-42.67	-0.01	706.04	0.423	0.000	86.34	0.00	0.00	0.00	0.00	0.00
130	SEABED	-610.45	-42.67	-0.11	710.12	0.000	0.000	86.34	0.00	0.00	0.00	0.00	0.00

S T A T I C P I P E C O O R D I N A T E S, F O R C E S A N D S T R E S S E S

NODE NO.	PIPE SECTION	X COORD (M)	Y COORD (M)	VERT ANGLE (DEG)	PIPE LENGTH (M)	SUPPORT REACTION (KN)	SEPARA -TION (M)	AXIAL TENSION (KN)	BENDING MOMENT (KN-M)	TENSILE STRESS (MPA)	BENDING STRESS (MPA)	TOTAL STRESS (MPA)	PERCNT YIELD (PCT)
1	LAYBARGE	96.31	6.41	1.93	0.00	9.948	0.000	0.00	2.75	0.00	4.25	4.25	1.18
3	LAYBARGE	84.28	6.05	1.58	12.04	24.038	0.000	-0.73	-19.04	-0.07	-29.48	29.55	8.21
5	LAYBARGE	73.45	5.73	1.91	22.87	24.754	0.000	-1.40	-30.15	-0.13	-46.68	46.81	13.00
7	TENSIONR	60.11	5.24	2.28	36.23	30.675	0.000	98.22	-21.52	9.46	-33.31	42.77	11.88
9	LAYBARGE	51.10	4.87	2.21	45.24	0.000	0.000	97.50	23.55	9.39	36.46	45.85	12.73
10	LAYBARGE	46.45	4.70	2.04	49.89	17.389	0.000	97.17	1.77	9.36	2.74	12.09	3.36
12	LAYBARGE	35.36	4.31	2.16	60.99	15.483	0.000	96.35	-35.41	9.28	-54.82	64.10	17.81
14	LAYBARGE	23.34	3.62	5.28	73.04	59.741	0.000	93.99	-197.25	9.05	-305.38	314.43	87.34
16	LAYBARGE	19.27	3.18	6.94	77.13	0.000	0.000	93.84	-111.72	9.04	-172.97	182.00	50.56
17	LAYBARGE	8.90	1.76	8.31	87.60	23.989	0.000	91.24	-23.25	8.79	-35.99	44.77	12.44
19	LAYBARGE	4.90	1.17	8.24	91.63	0.000	0.000	90.06	36.92	8.67	57.15	65.82	18.28
20	LAYBARGE	3.08	0.91	8.02	93.48	0.000	0.294	89.49	57.21	8.62	88.58	97.19	27.00
24	STINGER	-7.59	-0.39	5.79	104.23	0.000	0.342	87.21	77.73	8.38	120.34	128.74	35.76
26	STINGER	-16.69	-1.21	4.80	113.36	18.229	0.000	86.53	-4.01	8.26	-6.20	14.53	4.04
29	STINGER	-26.48	-2.02	4.65	123.18	7.081	0.000	85.72	0.00	8.14	0.00	8.25	2.29
31	STINGER	-37.34	-3.25	7.78	134.11	3.933	0.000	85.74	0.00	0.00	0.00	0.00	0.00
33	STINGER	-40.33	-3.73	9.08	137.14	0.000	0.314	85.76	0.00	0.00	0.00	0.00	0.00
35	SAGBEND	-46.50	-4.71	9.07	143.39	0.000	0.000	85.76	0.00	0.00	0.00	0.00	0.00
36	SAGBEND	-52.47	-5.67	9.06	149.44	0.000	0.000	85.75	0.00	0.00	0.00	0.00	0.00
37	SAGBEND	-58.45	-6.62	9.05	155.49	0.000	0.000	85.75	0.00	0.00	0.00	0.00	0.00
38	SAGBEND	-64.42	-7.57	9.03	161.54	0.000	0.000	85.75	0.00	0.00	0.00	0.00	0.00
39	SAGBEND	-70.40	-8.52	9.02	167.59	0.000	0.000	85.75	0.00	0.00	0.00	0.00	0.00

40	SAGBEND	-76.37	-9.47	9.01	173.64	0.000	0.000	85.74	0.00	0.00	0.00	0.00	0.00
41	SAGBEND	-82.35	-10.41	9.00	179.69	0.000	0.000	85.74	0.00	0.00	0.00	0.00	0.00
42	SAGBEND	-88.32	-11.36	8.99	185.74	0.000	0.000	85.74	0.00	0.00	0.00	0.00	0.00
43	SAGBEND	-94.30	-12.30	8.98	191.79	0.000	0.000	85.74	0.00	0.00	0.00	0.00	0.00
44	SAGBEND	-100.28	-13.25	8.97	197.84	0.000	0.000	85.73	0.00	0.00	0.00	0.00	0.00
45	SAGBEND	-106.25	-14.19	8.96	203.89	0.000	0.000	85.73	0.00	0.00	0.00	0.00	0.00
46	SAGBEND	-112.23	-15.13	8.95	209.94	0.000	0.000	85.73	0.00	0.00	0.00	0.00	0.00
47	SAGBEND	-118.21	-16.07	8.94	215.99	0.000	0.000	85.73	0.00	0.00	0.00	0.00	0.00
48	SAGBEND	-124.18	-17.01	8.93	222.04	0.000	0.000	85.72	0.00	0.00	0.00	0.00	0.00
49	SAGBEND	-130.16	-17.95	8.92	228.09	0.000	0.000	85.72	0.00	0.00	0.00	0.00	0.00
50	SAGBEND	-136.14	-18.89	8.91	234.14	0.000	0.000	85.72	0.00	0.00	0.00	0.00	0.00
51	SAGBEND	-142.11	-19.83	8.90	240.19	0.000	0.000	85.72	0.00	0.00	0.00	0.00	0.00
52	SAGBEND	-148.09	-20.76	8.89	246.24	0.000	0.000	85.71	0.00	0.00	0.00	0.00	0.00
53	SAGBEND	-154.07	-21.70	8.88	252.29	0.000	0.000	85.71	0.00	0.00	0.00	0.00	0.00
54	SAGBEND	-160.04	-22.63	8.87	258.34	0.000	0.000	85.71	0.00	0.00	0.00	0.00	0.00
55	SAGBEND	-166.02	-23.56	8.86	264.39	0.000	0.000	85.71	0.00	0.00	0.00	0.00	0.00
56	SAGBEND	-172.00	-24.49	8.85	270.44	0.000	0.000	85.70	0.00	0.00	0.00	0.00	0.00
57	SAGBEND	-177.98	-25.42	8.84	276.49	0.000	0.000	85.70	0.00	0.00	0.00	0.00	0.00
58	SAGBEND	-183.96	-26.35	8.83	282.54	0.000	0.000	85.70	0.00	0.00	0.00	0.00	0.00
59	SAGBEND	-189.94	-27.28	8.82	288.59	0.000	0.000	85.70	0.00	0.00	0.00	0.00	0.00
60	SAGBEND	-195.91	-28.21	8.81	294.64	0.000	0.000	85.69	0.00	0.00	0.00	0.00	0.00

S T A T I C P I P E C O O R D I N A T E S, F O R C E S A N D S T R E S S E S

NODE NO.	PIPE SECTION	X COORD (M)	Y COORD (M)	VERT ANGLE (DEG)	PIPE LENGTH (M)	SUPPORT REACTION (KN)	SEPARA -TION (M)	AXIAL TENSION (KN)	BENDING MOMENT (KN-M)	TENSILE STRESS (MPA)	BENDING STRESS (MPA)	TOTAL STRESS (MPA)	PERCNT YIELD (PCT)
61	SAGBEND	-201.89	-29.13	8.79	300.69	0.000	0.000	85.69	0.00	0.00	0.00	0.00	0.00
62	SAGBEND	-207.87	-30.06	8.78	306.74	0.000	0.000	85.69	0.00	0.00	0.00	0.00	0.00
63	SAGBEND	-213.85	-30.98	8.77	312.79	0.000	0.000	85.69	0.00	0.00	0.00	0.00	0.00
64	SAGBEND	-217.47	-31.54	8.77	316.46	0.000	0.000	85.69	0.00	0.00	0.00	0.00	0.00
65	SAGBEND	-221.10	-32.10	8.76	320.12	0.000	0.000	85.68	0.00	0.00	0.00	0.00	0.00
66	SAGBEND	-225.81	-32.81	8.46	324.89	0.000	0.000	85.62	0.00	0.00	0.00	0.00	0.00
67	SAGBEND	-231.80	-33.68	8.08	330.94	0.000	0.000	85.53	0.00	0.00	0.00	0.00	0.00
68	SAGBEND	-237.79	-34.51	7.70	336.99	0.000	0.000	85.46	0.00	0.00	0.00	0.00	0.00
69	SAGBEND	-243.79	-35.30	7.32	343.04	0.000	0.000	85.38	0.00	0.00	0.00	0.00	0.00
70	SAGBEND	-249.79	-36.05	6.94	349.09	0.000	0.000	85.31	0.00	0.00	0.00	0.00	0.00
71	SAGBEND	-255.80	-36.77	6.56	355.14	0.000	0.000	85.24	0.00	0.00	0.00	0.00	0.00
72	SAGBEND	-261.81	-37.44	6.18	361.19	0.000	0.000	85.18	0.00	0.00	0.00	0.00	0.00
73	SAGBEND	-267.83	-38.07	5.80	367.24	0.000	0.000	85.12	0.00	0.00	0.00	0.00	0.00
74	SAGBEND	-273.85	-38.66	5.41	373.29	0.000	0.000	85.06	0.00	0.00	0.00	0.00	0.00
75	SAGBEND	-279.88	-39.21	5.03	379.34	0.000	0.000	85.01	0.00	0.00	0.00	0.00	0.00
76	SAGBEND	-285.90	-39.72	4.64	385.39	0.000	0.000	84.96	0.00	0.00	0.00	0.00	0.00
77	SAGBEND	-291.94	-40.19	4.26	391.44	0.000	0.000	84.92	0.00	0.00	0.00	0.00	0.00
78	SAGBEND	-297.97	-40.62	3.88	397.49	0.000	0.000	84.88	0.00	0.00	0.00	0.00	0.00
79	SAGBEND	-304.01	-41.01	3.49	403.54	0.000	0.000	84.84	0.00	0.00	0.00	0.00	0.00
80	SAGBEND	-310.05	-41.36	3.10	409.59	0.000	0.000	84.81	0.00	0.00	0.00	0.00	0.00
81	SAGBEND	-316.09	-41.66	2.72	415.64	0.000	0.000	84.78	0.00	0.00	0.00	0.00	0.00
82	SAGBEND	-322.13	-41.93	2.33	421.69	0.000	0.000	84.75	0.00	0.00	0.00	0.00	0.00
83	SAGBEND	-328.18	-42.15	1.95	427.74	0.000	0.000	84.73	0.00	0.00	0.00	0.00	0.00
84	SAGBEND	-334.23	-42.34	1.56	433.79	0.000	0.000	84.72	0.00	0.00	0.00	0.00	0.00
85	SAGBEND	-340.27	-42.48	1.17	439.84	0.000	0.000	84.70	0.00	0.00	0.00	0.00	0.00
86	SAGBEND	-346.32	-42.59	0.79	445.89	0.000	0.000	84.69	0.00	0.00	0.00	0.00	0.00
87	SAGBEND	-352.37	-42.65	0.40	451.94	0.002	0.000	84.69	0.00	0.00	0.00	0.00	0.00
88	SEABED	-358.42	-42.67	0.04	457.99	0.283	0.000	84.68	-0.01	0.00	0.00	0.00	0.00
89	SEABED	-364.47	-42.67	0.00	464.04	0.556	0.000	84.68	0.00	0.00	0.00	0.00	0.00
90	SEABED	-370.52	-42.67	0.00	470.09	0.571	0.000	84.68	0.00	0.00	0.00	0.00	0.00
91	SEABED	-376.57	-42.67	0.00	476.14	0.572	0.000	84.68	0.00	0.00	0.00	0.00	0.00
92	SEABED	-382.62	-42.67	0.00	482.19	0.572	0.000	84.68	0.00	0.00	0.00	0.00	0.00
93	SEABED	-388.67	-42.67	0.00	488.24	0.572	0.000	84.68	0.00	0.00	0.00	0.00	0.00
94	SEABED	-394.72	-42.67	0.00	494.29	0.572	0.000	84.68	0.00	0.00	0.00	0.00	0.00
95	SEABED	-400.77	-42.67	0.00	500.34	0.572	0.000	84.68	0.00	0.00	0.00	0.00	0.00
96	SEABED	-406.82	-42.67	0.00	506.39	0.572	0.000	84.68	0.00	0.00	0.00	0.00	0.00
97	SEABED	-412.87	-42.67	0.00	512.44	0.572	0.000	84.68	0.00	0.00	0.00	0.00	0.00
98	SEABED	-418.92	-42.67	0.00	518.49	0.572	0.000	84.68	0.00	0.00	0.00	0.00	0.00
99	SEABED	-424.97	-42.67	0.00	524.54	0.572	0.000	84.68	0.00	0.00	0.00	0.00	0.00
100	SEABED	-431.02	-42.67	0.00	530.59	0.572	0.000	84.68	0.00	0.00	0.00	0.00	0.00
101	SEABED	-437.07	-42.67	0.00	536.64	0.572	0.000	84.68	0.00	0.00	0.00	0.00	0.00
102	SEABED	-443.12	-42.67	0.00	542.69	0.572	0.000	84.68	0.00	0.00	0.00	0.00	0.00
103	SEABED	-449.17	-42.67	0.00	548.74	0.572	0.000	84.68	0.00	0.00	0.00	0.00	0.00
104	SEABED	-455.22	-42.67	0.00	554.79	0.572	0.000	84.68	0.00	0.00	0.00	0.00	0.00

S T A T I C P I P E C O O R D I N A T E S, F O R C E S A N D S T R E S S E S

NODE NO.	PIPE SECTION	X COORD (M)	Y COORD (M)	VERT ANGLE (DEG)	PIPE LENGTH (M)	SUPPORT REACTION (KN)	SEPARA -TION (M)	AXIAL TENSION (KN)	BENDING MOMENT (KN-M)	TENSILE STRESS (MPA)	BENDING STRESS (MPA)	TOTAL STRESS (MPA)	PERCNT YIELD (PCT)
105	SEABED	-461.27	-42.67	0.00	560.84	0.572	0.000	84.68	0.00	0.00	0.00	0.00	0.00
106	SEABED	-467.32	-42.67	0.00	566.89	0.572	0.000	84.68	0.00	0.00	0.00	0.00	0.00
107	SEABED	-473.37	-42.67	0.00	572.94	0.572	0.000	84.68	0.00	0.00	0.00	0.00	0.00
108	SEABED	-479.42	-42.67	0.00	578.99	0.572	0.000	84.68	0.00	0.00	0.00	0.00	0.00
109	SEABED	-485.47	-42.67	0.00	585.04	0.572	0.000	84.68	0.00	0.00	0.00	0.00	0.00
110	SEABED	-491.52	-42.67	0.00	591.09	0.572	0.000	84.68	0.00	0.00	0.00	0.00	0.00
111	SEABED	-497.57	-42.67	0.00	597.14	0.572	0.000	84.68	0.00	0.00	0.00	0.00	0.00
112	SEABED	-503.62	-42.67	0.00	603.19	0.572	0.000	84.68	0.00	0.00	0.00	0.00	0.00
113	SEABED	-509.67	-42.67	0.00	609.24	0.572	0.000	84.68	0.00	0.00	0.00	0.00	0.00
114	SEABED	-515.72	-42.67	0.00	615.29	0.572	0.000	84.68	0.00	0.00	0.00	0.00	0.00
115	SEABED	-521.77	-42.67	0.00	621.34	0.572	0.000	84.68	0.00	0.00	0.00	0.00	0.00
116	SEABED	-527.82	-42.67	0.00	627.39	0.572	0.000	84.68	0.00	0.00	0.00	0.00	0.00
117	SEABED	-533.87	-42.67	0.00	633.44	0.572	0.000	84.68	0.00	0.00	0.00	0.00	0.00
118	SEABED	-539.92	-42.67	0.00	639.49	0.572	0.000	84.68	0.00	0.00	0.00	0.00	0.00
119	SEABED	-545.97	-42.67	0.00	645.54	0.572	0.000	84.68	0.00	0.00	0.00	0.00	0.00
120	SEABED	-552.02	-42.67	0.00	651.59	0.572	0.000	84.68	0.00	0.00	0.00	0.00	0.00
121	SEABED	-558.07	-42.67	0.00	657.64	0.572	0.000	84.68	0.00	0.00	0.00	0.00	0.00
122	SEABED	-564.12	-42.67	0.00	663.69	0.572	0.000	84.68	0.00	0.00	0.00	0.00	0.00
123	SEABED	-570.17	-42.67	0.00	669.74	0.572	0.000	84.68	0.00	0.00	0.00	0.00	0.00
124	SEABED	-576.22	-42.67	0.00	675.79	0.572	0.000	84.68	0.00	0.00	0.00	0.00	0.00
125	SEABED	-582.27	-42.67	0.00	681.84	0.572	0.000	84.68	0.00	0.00	0.00	0.00	0.00
126	SEABED	-588.32	-42.67	0.00	687.89	0.572	0.000	84.68	0.00	0.00	0.00	0.00	0.00
127	SEABED	-594.37	-42.67	0.00	693.94	0.572	0.000	84.68	0.00	0.00	0.00	0.00	0.00
128	SEABED	-600.42	-42.67	0.00	699.99	0.572	0.000	84.68	0.00	0.00	0.00	0.00	0.00
129	SEABED	-606.47	-42.67	0.00	706.04	0.572	0.000	84.68	0.00	0.00	0.00	0.00	0.00
130	SEABED	-612.52	-42.67	0.00	712.09	0.470	0.000	84.68	0.00	0.00	0.00	0.00	0.00
131	SEABED	-616.54	-42.67	-0.01	716.10	0.326	0.000	84.68	0.00	0.00	0.00	0.00	0.00
132	SEABED	-620.55	-42.67	-0.11	720.12	0.000	0.000	84.68	0.00	0.00	0.00	0.00	0.00

S T A T I C P I P E C O O R D I N A T E S, F O R C E S A N D S T R E S S E S

NODE NO.	PIPE SECTION	X COORD (M)	Y COORD (M)	VERT ANGLE (DEG)	PIPE LENGTH (M)	SUPPORT REACTION (KN)	SEPARA -TION (M)	AXIAL TENSION (KN)	BENDING MOMENT (KN-M)	TENSILE STRESS (MPA)	BENDING STRESS (MPA)	TOTAL STRESS (MPA)	PERCNT YIELD (PCT)
1	LAYBARGE	96.31	6.41	1.93	0.00	9.948	0.000	0.00	2.75	0.00	4.25	4.25	1.18
3	LAYBARGE	84.28	6.05	1.58	12.04	24.033	0.000	-0.73	-19.03	-0.07	-29.47	29.54	8.20
5	LAYBARGE	73.45	5.73	1.91	22.87	24.771	0.000	-1.40	-30.18	-0.13	-46.73	46.86	13.02
7	TENSIONR	60.11	5.24	2.28	36.23	30.691	0.000	144.92	-21.37	13.95	-33.09	47.04	13.07
9	LAYBARGE	51.10	4.87	2.21	45.24	0.000	0.000	144.20	23.25	13.89	35.99	49.88	13.86
10	LAYBARGE	46.45	4.70	2.04	49.89	17.007	0.000	143.87	2.14	13.85	3.32	17.17	4.77
12	LAYBARGE	35.36	4.31	2.17	60.99	16.373	0.000	143.05	-35.68	13.77	-55.24	69.02	19.17
14	LAYBARGE	23.34	3.62	5.29	73.04	63.792	0.000	140.65	-200.60	13.54	-310.56	324.11	90.03
16	LAYBARGE	19.27	3.18	6.97	77.13	0.000	0.000	140.55	-110.71	13.53	-171.40	184.93	51.37
17	LAYBARGE	8.89	1.76	8.26	87.60	23.146	0.000	137.95	-21.43	13.28	-33.18	46.47	12.91
19	LAYBARGE	4.90	1.18	8.20	91.64	0.000	0.000	136.77	34.56	13.17	53.50	66.67	18.52
20	LAYBARGE	3.06	0.92	7.99	93.49	0.000	0.298	136.21	53.16	13.12	82.30	95.42	26.50
24	STINGER	-7.55	-0.39	5.96	104.19	0.000	0.350	133.93	71.56	12.87	110.78	123.68	34.36
26	STINGER	-16.65	-1.24	5.01	113.32	16.539	0.000	133.20	-0.93	12.75	-1.43	14.26	3.96
29	STINGER	-26.46	-2.09	4.83	123.17	8.889	0.000	132.35	0.00	12.63	0.00	12.74	3.54
31	STINGER	-37.32	-3.36	7.41	134.10	3.351	0.000	132.41	0.00	0.00	0.00	0.00	0.00
33	STINGER	-40.29	-3.78	8.13	137.11	0.000	0.376	132.42	0.00	0.00	0.00	0.00	0.00
35	SAGBEND	-46.51	-4.67	8.12	143.39	0.000	0.000	132.42	0.00	0.00	0.00	0.00	0.00
36	SAGBEND	-52.50	-5.53	8.11	149.44	0.000	0.000	132.41	0.00	0.00	0.00	0.00	0.00
37	SAGBEND	-58.49	-6.38	8.10	155.49	0.000	0.000	132.41	0.00	0.00	0.00	0.00	0.00
38	SAGBEND	-64.48	-7.23	8.10	161.54	0.000	0.000	132.41	0.00	0.00	0.00	0.00	0.00
39	SAGBEND	-70.47	-8.08	8.09	167.59	0.000	0.000	132.41	0.00	0.00	0.00	0.00	0.00
40	SAGBEND	-76.46	-8.93	8.08	173.64	0.000	0.000	132.41	0.00	0.00	0.00	0.00	0.00
41	SAGBEND	-82.45	-9.78	8.08	179.69	0.000	0.000	132.40	0.00	0.00	0.00	0.00	0.00
42	SAGBEND	-88.44	-10.63	8.07	185.74	0.000	0.000	132.40	0.00	0.00	0.00	0.00	0.00
43	SAGBEND	-94.43	-11.48	8.06	191.79	0.000	0.000	132.40	0.00	0.00	0.00	0.00	0.00
44	SAGBEND	-100.42	-12.33	8.05	197.84	0.000	0.000	132.40	0.00	0.00	0.00	0.00	0.00
45	SAGBEND	-106.41	-13.18	8.05	203.89	0.000	0.000	132.39	0.00	0.00	0.00	0.00	0.00
46	SAGBEND	-112.40	-14.02	8.04	209.94	0.000	0.000	132.39	0.00	0.00	0.00	0.00	0.00
47	SAGBEND	-118.39	-14.87	8.03	215.99	0.000	0.000	132.39	0.00	0.00	0.00	0.00	0.00
48	SAGBEND	-124.38	-15.72	8.03	222.04	0.000	0.000	132.39	0.00	0.00	0.00	0.00	0.00
49	SAGBEND	-130.37	-16.56	8.02	228.09	0.000	0.000	132.39	0.00	0.00	0.00	0.00	0.00
50	SAGBEND	-136.36	-17.40	8.01	234.14	0.000	0.000	132.38	0.00	0.00	0.00	0.00	0.00
51	SAGBEND	-142.36	-18.25	8.01	240.19	0.000	0.000	132.38	0.00	0.00	0.00	0.00	0.00

52	SAGBEND	-148.35	-19.09	8.00	246.24	0.000	0.000	132.38	0.00	0.00	0.00	0.00	0.00
53	SAGBEND	-154.34	-19.93	7.99	252.29	0.000	0.000	132.38	0.00	0.00	0.00	0.00	0.00
54	SAGBEND	-160.33	-20.77	7.99	258.34	0.000	0.000	132.37	0.00	0.00	0.00	0.00	0.00
55	SAGBEND	-166.32	-21.61	7.98	264.39	0.000	0.000	132.37	0.00	0.00	0.00	0.00	0.00
56	SAGBEND	-172.31	-22.45	7.97	270.44	0.000	0.000	132.37	0.00	0.00	0.00	0.00	0.00
57	SAGBEND	-178.30	-23.29	7.97	276.49	0.000	0.000	132.37	0.00	0.00	0.00	0.00	0.00
58	SAGBEND	-184.29	-24.13	7.96	282.54	0.000	0.000	132.37	0.00	0.00	0.00	0.00	0.00
59	SAGBEND	-190.29	-24.97	7.95	288.59	0.000	0.000	132.36	0.00	0.00	0.00	0.00	0.00
60	SAGBEND	-196.28	-25.80	7.95	294.64	0.000	0.000	132.36	0.00	0.00	0.00	0.00	0.00

S T A T I C P I P E C O O R D I N A T E S, F O R C E S A N D S T R E S S E S

NODE NO.	PIPE SECTION	X COORD (M)	Y COORD (M)	VERT ANGLE (DEG)	PIPE LENGTH (M)	SUPPORT REACTION (KN)	SEPARA -TION (M)	AXIAL TENSION (KN)	BENDING MOMENT (KN-M)	TENSILE STRESS (MPA)	BENDING STRESS (MPA)	TOTAL STRESS (MPA)	PERCNT YIELD (PCT)
61	SAGBEND	-202.27	-26.64	7.94	300.69	0.000	0.000	132.36	0.00	0.00	0.00	0.00	0.00
62	SAGBEND	-208.26	-27.48	7.93	306.74	0.000	0.000	132.36	0.00	0.00	0.00	0.00	0.00
63	SAGBEND	-214.25	-28.31	7.93	312.79	0.000	0.000	132.35	0.00	0.00	0.00	0.00	0.00
64	SAGBEND	-217.88	-28.82	7.92	316.46	0.000	0.000	132.35	0.00	0.00	0.00	0.00	0.00
65	SAGBEND	-221.52	-29.32	7.92	320.12	0.000	0.000	132.35	0.00	0.00	0.00	0.00	0.00
66	SAGBEND	-226.24	-29.97	7.72	324.89	0.000	0.000	132.29	0.00	0.00	0.00	0.00	0.00
67	SAGBEND	-232.24	-30.77	7.48	330.94	0.000	0.000	132.21	0.00	0.00	0.00	0.00	0.00
68	SAGBEND	-238.24	-31.54	7.23	336.99	0.000	0.000	132.14	0.00	0.00	0.00	0.00	0.00
69	SAGBEND	-244.24	-32.29	6.99	343.04	0.000	0.000	132.07	0.00	0.00	0.00	0.00	0.00
70	SAGBEND	-250.25	-33.02	6.74	349.09	0.000	0.000	132.00	0.00	0.00	0.00	0.00	0.00
71	SAGBEND	-256.26	-33.71	6.49	355.14	0.000	0.000	131.94	0.00	0.00	0.00	0.00	0.00
72	SAGBEND	-262.27	-34.38	6.25	361.19	0.000	0.000	131.87	0.00	0.00	0.00	0.00	0.00
73	SAGBEND	-268.28	-35.03	6.00	367.24	0.000	0.000	131.81	0.00	0.00	0.00	0.00	0.00
74	SAGBEND	-274.30	-35.65	5.75	373.29	0.000	0.000	131.75	0.00	0.00	0.00	0.00	0.00
75	SAGBEND	-280.32	-36.24	5.51	379.34	0.000	0.000	131.70	0.00	0.00	0.00	0.00	0.00
76	SAGBEND	-286.35	-36.81	5.26	385.39	0.000	0.000	131.64	0.00	0.00	0.00	0.00	0.00
77	SAGBEND	-292.37	-37.35	5.01	391.44	0.000	0.000	131.59	0.00	0.00	0.00	0.00	0.00
78	SAGBEND	-298.40	-37.87	4.76	397.49	0.000	0.000	131.54	0.00	0.00	0.00	0.00	0.00
79	SAGBEND	-304.43	-38.36	4.51	403.54	0.000	0.000	131.50	0.00	0.00	0.00	0.00	0.00
80	SAGBEND	-310.46	-38.82	4.27	409.59	0.000	0.000	131.45	0.00	0.00	0.00	0.00	0.00
81	SAGBEND	-316.50	-39.26	4.02	415.64	0.000	0.000	131.41	0.00	0.00	0.00	0.00	0.00
82	SAGBEND	-322.53	-39.67	3.77	421.69	0.000	0.000	131.37	0.00	0.00	0.00	0.00	0.00
83	SAGBEND	-328.57	-40.05	3.52	427.74	0.000	0.000	131.34	0.00	0.00	0.00	0.00	0.00
84	SAGBEND	-334.61	-40.41	3.27	433.79	0.000	0.000	131.30	0.00	0.00	0.00	0.00	0.00
85	SAGBEND	-340.65	-40.74	3.02	439.84	0.000	0.000	131.27	0.00	0.00	0.00	0.00	0.00
86	SAGBEND	-346.69	-41.05	2.77	445.89	0.000	0.000	131.24	0.00	0.00	0.00	0.00	0.00
87	SAGBEND	-352.74	-41.33	2.52	451.94	0.000	0.000	131.22	0.00	0.00	0.00	0.00	0.00
88	SAGBEND	-358.78	-41.58	2.27	457.99	0.000	0.000	131.19	0.00	0.00	0.00	0.00	0.00
89	SAGBEND	-364.83	-41.81	2.02	464.04	0.000	0.000	131.17	0.00	0.00	0.00	0.00	0.00
90	SAGBEND	-370.87	-42.01	1.77	470.09	0.000	0.000	131.15	0.00	0.00	0.00	0.00	0.00
91	SAGBEND	-376.92	-42.18	1.52	476.14	0.000	0.000	131.14	0.00	0.00	0.00	0.00	0.00
92	SAGBEND	-382.97	-42.33	1.27	482.19	0.000	0.000	131.12	0.00	0.00	0.00	0.00	0.00
93	SAGBEND	-389.02	-42.45	1.02	488.24	0.000	0.000	131.11	0.00	0.00	0.00	0.00	0.00
94	SAGBEND	-395.07	-42.54	0.77	494.29	0.000	0.000	131.10	0.00	0.00	0.00	0.00	0.00
95	SAGBEND	-401.12	-42.61	0.53	500.34	0.000	0.000	131.10	0.00	0.00	0.00	0.00	0.00
96	SAGBEND	-407.17	-42.66	0.28	506.39	0.001	0.000	131.09	0.00	0.00	0.00	0.00	0.00
97	SEABED	-413.22	-42.67	0.04	512.44	0.257	0.000	131.09	0.00	0.00	0.00	0.00	0.00
98	SEABED	-419.27	-42.67	0.00	518.49	0.543	0.000	131.09	0.00	0.00	0.00	0.00	0.00
99	SEABED	-425.32	-42.67	0.00	524.54	0.570	0.000	131.09	0.00	0.00	0.00	0.00	0.00
100	SEABED	-431.37	-42.67	0.00	530.59	0.572	0.000	131.09	0.00	0.00	0.00	0.00	0.00
101	SEABED	-437.42	-42.67	0.00	536.64	0.572	0.000	131.09	0.00	0.00	0.00	0.00	0.00
102	SEABED	-443.47	-42.67	0.00	542.69	0.572	0.000	131.09	0.00	0.00	0.00	0.00	0.00
103	SEABED	-449.52	-42.67	0.00	548.74	0.572	0.000	131.09	0.00	0.00	0.00	0.00	0.00
104	SEABED	-455.57	-42.67	0.00	554.79	0.572	0.000	131.09	0.00	0.00	0.00	0.00	0.00

S T A T I C P I P E C O O R D I N A T E S, F O R C E S A N D S T R E S S E S

NODE NO.	PIPE SECTION	X COORD (M)	Y COORD (M)	VERT ANGLE (DEG)	PIPE LENGTH (M)	SUPPORT REACTION (KN)	SEPARA -TION (M)	AXIAL TENSION (KN)	BENDING MOMENT (KN-M)	TENSILE STRESS (MPA)	BENDING STRESS (MPA)	TOTAL STRESS (MPA)	PERCNT YIELD (PCT)
105	SEABED	-461.62	-42.67	0.00	560.84	0.572	0.000	131.09	0.00	0.00	0.00	0.00	0.00
106	SEABED	-467.67	-42.67	0.00	566.89	0.572	0.000	131.09	0.00	0.00	0.00	0.00	0.00
107	SEABED	-473.72	-42.67	0.00	572.94	0.572	0.000	131.09	0.00	0.00	0.00	0.00	0.00
108	SEABED	-479.77	-42.67	0.00	578.99	0.572	0.000	131.09	0.00	0.00	0.00	0.00	0.00
109	SEABED	-485.82	-42.67	0.00	585.04	0.572	0.000	131.09	0.00	0.00	0.00	0.00	0.00
110	SEABED	-491.87	-42.67	0.00	591.09	0.572	0.000	131.09	0.00	0.00	0.00	0.00	0.00
111	SEABED	-497.92	-42.67	0.00	597.14	0.572	0.000	131.09	0.00	0.00	0.00	0.00	0.00
112	SEABED	-503.97	-42.67	0.00	603.19	0.572	0.000	131.09	0.00	0.00	0.00	0.00	0.00
113	SEABED	-510.02	-42.67	0.00	609.24	0.572	0.000	131.09	0.00	0.00	0.00	0.00	0.00
114	SEABED	-516.07	-42.67	0.00	615.29	0.572	0.000	131.09	0.00	0.00	0.00	0.00	0.00
115	SEABED	-522.12	-42.67	0.00	621.34	0.572	0.000	131.09	0.00	0.00	0.00	0.00	0.00
116	SEABED	-528.17	-42.67	0.00	627.39	0.572	0.000	131.09	0.00	0.00	0.00	0.00	0.00
117	SEABED	-534.22	-42.67	0.00	633.44	0.572	0.000	131.09	0.00	0.00	0.00	0.00	0.00
118	SEABED	-540.27	-42.67	0.00	639.49	0.572	0.000	131.09	0.00	0.00	0.00	0.00	0.00
119	SEABED	-546.32	-42.67	0.00	645.54	0.572	0.000	131.09	0.00	0.00	0.00	0.00	0.00
120	SEABED	-552.37	-42.67	0.00	651.59	0.572	0.000	131.09	0.00	0.00	0.00	0.00	0.00
121	SEABED	-558.42	-42.67	0.00	657.64	0.572	0.000	131.09	0.00	0.00	0.00	0.00	0.00
122	SEABED	-564.47	-42.67	0.00	663.69	0.572	0.000	131.09	0.00	0.00	0.00	0.00	0.00
123	SEABED	-570.52	-42.67	0.00	669.74	0.572	0.000	131.09	0.00	0.00	0.00	0.00	0.00
124	SEABED	-576.57	-42.67	0.00	675.79	0.572	0.000	131.09	0.00	0.00	0.00	0.00	0.00
125	SEABED	-582.62	-42.67	0.00	681.84	0.572	0.000	131.09	0.00	0.00	0.00	0.00	0.00
126	SEABED	-588.67	-42.67	0.00	687.89	0.572	0.000	131.09	0.00	0.00	0.00	0.00	0.00
127	SEABED	-594.72	-42.67	0.00	693.94	0.572	0.000	131.09	0.00	0.00	0.00	0.00	0.00
128	SEABED	-600.77	-42.67	0.00	699.99	0.572	0.000	131.09	0.00	0.00	0.00	0.00	0.00
129	SEABED	-606.82	-42.67	0.00	706.04	0.570	0.000	131.09	0.00	0.00	0.00	0.00	0.00
130	SEABED	-612.87	-42.67	0.00	712.09	0.463	0.000	131.09	0.00	0.00	0.00	0.00	0.00
131	SEABED	-616.88	-42.67	-0.01	716.10	0.304	0.000	131.09	0.00	0.00	0.00	0.00	0.00
132	SEABED	-620.90	-42.67	-0.09	720.12	0.000	0.000	131.09	0.00	0.00	0.00	0.00	0.00

S T A T I C P I P E C O O R D I N A T E S, F O R C E S A N D S T R E S S E S

NODE NO.	PIPE SECTION	X COORD (M)	Y COORD (M)	VERT ANGLE (DEG)	PIPE LENGTH (M)	SUPPORT REACTION (KN)	SEPARA -TION (M)	AXIAL TENSION (KN)	BENDING MOMENT (KN-M)	TENSILE STRESS (MPA)	BENDING STRESS (MPA)	TOTAL STRESS (MPA)	PERCNT YIELD (PCT)
1	LAYBARGE	96.31	6.41	1.93	0.00	9.946	0.000	0.00	2.75	0.00	4.25	4.25	1.18
3	LAYBARGE	84.28	6.05	1.58	12.04	24.049	0.000	-0.73	-19.06	-0.07	-29.50	29.57	8.21
5	LAYBARGE	73.45	5.73	1.90	22.87	24.718	0.000	-1.39	-30.08	-0.13	-46.57	46.70	12.97
7	TENSIONR	60.11	5.24	2.28	36.23	30.873	0.000	144.92	-21.65	13.95	-33.52	47.47	13.19
9	LAYBARGE	51.10	4.87	2.21	45.24	0.000	0.000	144.20	24.12	13.89	37.34	51.23	14.23
10	LAYBARGE	46.45	4.70	2.03	49.89	16.058	0.000	143.88	3.55	13.85	5.50	19.35	5.37
12	LAYBARGE	35.36	4.31	2.22	60.99	20.049	0.000	143.03	-40.12	13.77	-62.12	75.89	21.08
14	LAYBARGE	23.34	3.62	5.05	73.04	52.006	0.000	140.90	-176.36	13.57	-273.03	286.60	79.61
16	LAYBARGE	19.27	3.20	6.62	77.13	0.000	0.000	140.57	-116.47	13.53	-180.31	193.84	53.85
17	LAYBARGE	8.90	1.76	9.29	87.60	41.884	0.000	137.59	-118.52	13.25	-183.49	196.74	54.65
19	LAYBARGE	4.92	1.07	10.15	91.64	0.000	0.000	136.55	-42.59	13.15	-65.94	79.09	21.97
20	LAYBARGE	3.09	0.74	10.28	93.49	0.000	0.124	135.93	-15.13	13.09	-23.42	36.51	10.14
24	STINGER	-7.60	-1.15	9.47	104.35	0.000	0.105	133.24	49.99	12.76	77.40	90.22	25.06
26	STINGER	-16.63	-2.57	8.55	113.49	6.594	0.000	131.87	18.42	12.55	28.52	41.21	11.45
29	STINGER	-26.29	-4.00	8.50	123.25	18.504	0.000	130.42	-30.20	12.33	-46.76	59.31	16.47
31	STINGER	-37.09	-5.64	8.65	134.18	0.356	0.000	128.80	0.00	12.08	0.00	12.40	3.44
33	STINGER	-40.09	-6.04	7.63	137.21	0.000	0.504	128.82	0.00	0.00	0.00	0.00	0.00
35	SAGBEND	-46.22	-6.87	7.63	143.39	0.000	0.000	128.82	0.00	0.00	0.00	0.00	0.00
36	SAGBEND	-52.22	-7.67	7.62	149.44	0.000	0.000	128.82	0.00	0.00	0.00	0.00	0.00
37	SAGBEND	-58.21	-8.47	7.61	155.49	0.000	0.000	128.82	0.00	0.00	0.00	0.00	0.00
38	SAGBEND	-64.21	-9.27	7.60	161.54	0.000	0.000	128.81	0.00	0.00	0.00	0.00	0.00
39	SAGBEND	-70.21	-10.07	7.60	167.59	0.000	0.000	128.81	0.00	0.00	0.00	0.00	0.00
40	SAGBEND	-76.20	-10.87	7.59	173.64	0.000	0.000	128.81	0.00	0.00	0.00	0.00	0.00
41	SAGBEND	-82.20	-11.67	7.58	179.69	0.000	0.000	128.81	0.00	0.00	0.00	0.00	0.00
42	SAGBEND	-88.20	-12.47	7.58	185.74	0.000	0.000	128.81	0.00	0.00	0.00	0.00	0.00
43	SAGBEND	-94.20	-13.26	7.57	191.79	0.000	0.000	128.80	0.00	0.00	0.00	0.00	0.00
44	SAGBEND	-100.19	-14.06	7.56	197.84	0.000	0.000	128.80	0.00	0.00	0.00	0.00	0.00
45	SAGBEND	-106.19	-14.86	7.56	203.89	0.000	0.000	128.80	0.00	0.00	0.00	0.00	0.00
46	SAGBEND	-112.19	-15.65	7.55	209.94	0.000	0.000	128.80	0.00	0.00	0.00	0.00	0.00
47	SAGBEND	-118.19	-16.45	7.54	215.99	0.000	0.000	128.80	0.00	0.00	0.00	0.00	0.00
48	SAGBEND	-124.18	-17.24	7.53	222.04	0.000	0.000	128.79	0.00	0.00	0.00	0.00	0.00
49	SAGBEND	-130.18	-18.03	7.53	228.09	0.000	0.000	128.79	0.00	0.00	0.00	0.00	0.00
50	SAGBEND	-136.18	-18.82	7.52	234.14	0.000	0.000	128.79	0.00	0.00	0.00	0.00	0.00
51	SAGBEND	-142.18	-19.62	7.51	240.19	0.000	0.000	128.79	0.00	0.00	0.00	0.00	0.00
52	SAGBEND	-148.17	-20.41	7.51	246.24	0.000	0.000	128.79	0.00	0.00	0.00	0.00	0.00
53	SAGBEND	-154.17	-21.20	7.50	252.29	0.000	0.000	128.78	0.00	0.00	0.00	0.00	0.00
54	SAGBEND	-160.17	-21.99	7.49	258.34	0.000	0.000	128.78	0.00	0.00	0.00	0.00	0.00
55	SAGBEND	-166.17	-22.77	7.49	264.39	0.000	0.000	128.78	0.00	0.00	0.00	0.00	0.00
56	SAGBEND	-172.17	-23.56	7.48	270.44	0.000	0.000	128.78	0.00	0.00	0.00	0.00	0.00
57	SAGBEND	-178.17	-24.35	7.47	276.49	0.000	0.000	128.77	0.00	0.00	0.00	0.00	0.00
58	SAGBEND	-184.17	-25.14	7.46	282.54	0.000	0.000	128.77	0.00	0.00	0.00	0.00	0.00
59	SAGBEND	-190.16	-25.92	7.46	288.59	0.000	0.000	128.77	0.00	0.00	0.00	0.00	0.00
60	SAGBEND	-196.16	-26.71	7.45	294.64	0.000	0.000	128.77	0.00	0.00	0.00	0.00	0.00

PROJECT - 10" PL DYNAMIC START UP STRESS AT BC PLATFORM HEADING 45 JOB NO. - FINAL PROJECT
USER ID - MZR LICENSED BY - PT Timas Suplindo CASE 9

S T A T I C P I P E C O O R D I N A T E S, F O R C E S A N D S T R E S S E S

NODE NO.	PIPE SECTION	X COORD (M)	Y COORD (M)	VERT ANGLE (DEG)	PIPE LENGTH (M)	SUPPORT REACTION (KN)	SEPARA -TION (M)	AXIAL TENSION (KN)	BENDING MOMENT (KN-M)	TENSILE STRESS (MPA)	BENDING STRESS (MPA)	TOTAL STRESS (MPA)	PERCNT YIELD (PCT)
61	SAGBEND	-202.16	-27.49	7.44	300.69	0.000	0.000	128.77	0.00	0.00	0.00	0.00	0.00
62	SAGBEND	-208.16	-28.27	7.44	306.74	0.000	0.000	128.76	0.00	0.00	0.00	0.00	0.00
63	SAGBEND	-214.16	-29.06	7.43	312.79	0.000	0.000	128.76	0.00	0.00	0.00	0.00	0.00
64	SAGBEND	-220.16	-29.84	7.42	318.84	0.000	0.000	128.76	0.00	0.00	0.00	0.00	0.00
65	SAGBEND	-226.16	-30.62	7.42	324.89	0.000	0.000	128.76	0.00	0.00	0.00	0.00	0.00
66	SAGBEND	-231.35	-31.29	7.41	330.12	0.000	0.000	128.76	0.00	0.00	0.00	0.00	0.00
67	SAGBEND	-238.16	-32.16	7.12	336.99	0.000	0.000	128.67	0.00	0.00	0.00	0.00	0.00
68	SAGBEND	-244.16	-32.90	6.87	343.04	0.000	0.000	128.60	0.00	0.00	0.00	0.00	0.00
69	SAGBEND	-250.17	-33.61	6.62	349.09	0.000	0.000	128.54	0.00	0.00	0.00	0.00	0.00
70	SAGBEND	-256.18	-34.29	6.36	355.14	0.000	0.000	128.47	0.00	0.00	0.00	0.00	0.00
71	SAGBEND	-262.20	-34.95	6.11	361.19	0.000	0.000	128.41	0.00	0.00	0.00	0.00	0.00
72	SAGBEND	-268.21	-35.58	5.86	367.24	0.000	0.000	128.35	0.00	0.00	0.00	0.00	0.00
73	SAGBEND	-274.23	-36.19	5.60	373.29	0.000	0.000	128.29	0.00	0.00	0.00	0.00	0.00
74	SAGBEND	-280.26	-36.76	5.35	379.34	0.000	0.000	128.24	0.00	0.00	0.00	0.00	0.00
75	SAGBEND	-286.28	-37.31	5.09	385.39	0.000	0.000	128.19	0.00	0.00	0.00	0.00	0.00
76	SAGBEND	-292.31	-37.84	4.84	391.44	0.000	0.000	128.14	0.00	0.00	0.00	0.00	0.00
77	SAGBEND	-298.34	-38.34	4.58	397.49	0.000	0.000	128.09	0.00	0.00	0.00	0.00	0.00
78	SAGBEND	-304.37	-38.81	4.33	403.54	0.000	0.000	128.05	0.00	0.00	0.00	0.00	0.00
79	SAGBEND	-310.40	-39.25	4.07	409.59	0.000	0.000	128.01	0.00	0.00	0.00	0.00	0.00
80	SAGBEND	-316.44	-39.66	3.82	415.64	0.000	0.000	127.97	0.00	0.00	0.00	0.00	0.00
81	SAGBEND	-322.48	-40.05	3.56	421.69	0.000	0.000	127.93	0.00	0.00	0.00	0.00	0.00
82	SAGBEND	-328.51	-40.42	3.31	427.74	0.000	0.000	127.89	0.00	0.00	0.00	0.00	0.00
83	SAGBEND	-334.55	-40.75	3.05	433.79	0.000	0.000	127.86	0.00	0.00	0.00	0.00	0.00
84	SAGBEND	-340.60	-41.06	2.80	439.84	0.000	0.000	127.83	0.00	0.00	0.00	0.00	0.00
85	SAGBEND	-346.64	-41.34	2.54	445.89	0.000	0.000	127.81	0.00	0.00	0.00	0.00	0.00
86	SAGBEND	-352.68	-41.60	2.28	451.94	0.000	0.000	127.78	0.00	0.00	0.00	0.00	0.00
87	SAGBEND	-358.73	-41.83	2.03	457.99	0.000	0.000	127.76	0.00	0.00	0.00	0.00	0.00
88	SAGBEND	-364.78	-42.03	1.77	464.04	0.000	0.000	127.74	0.00	0.00	0.00	0.00	0.00
89	SAGBEND	-370.82	-42.20	1.52	470.09	0.000	0.000	127.73	0.00	0.00	0.00	0.00	0.00
90	SAGBEND	-376.87	-42.35	1.26	476.14	0.000	0.000	127.71	0.00	0.00	0.00	0.00	0.00
91	SAGBEND	-382.92	-42.46	1.00	482.19	0.000	0.000	127.70	0.00	0.00	0.00	0.00	0.00
92	SAGBEND	-388.97	-42.56	0.75	488.24	0.000	0.000	127.69	0.00	0.00	0.00	0.00	0.00
93	SAGBEND	-395.02	-42.62	0.49	494.29	0.000	0.000	127.69	0.00	0.00	0.00	0.00	0.00
94	SAGBEND	-401.07	-42.66	0.24	500.34	0.010	0.000	127.68	-0.01	0.00	0.00	0.00	0.00
95	SEABED	-407.12	-42.67	0.02	506.39	0.346	0.000	127.68	0.00	0.00	0.00	0.00	0.00
96	SEABED	-413.17	-42.67	0.00	512.44	0.555	0.000	127.68	0.00	0.00	0.00	0.00	0.00
97	SEABED	-419.22	-42.67	0.00	518.49	0.571	0.000	127.68	0.00	0.00	0.00	0.00	0.00
98	SEABED	-425.27	-42.67	0.00	524.54	0.572	0.000	127.68	0.00	0.00	0.00	0.00	0.00
99	SEABED	-431.32	-42.67	0.00	530.59	0.572	0.000	127.68	0.00	0.00	0.00	0.00	0.00
100	SEABED	-437.37	-42.67	0.00	536.64	0.572	0.000	127.68	0.00	0.00	0.00	0.00	0.00
101	SEABED	-443.42	-42.67	0.00	542.69	0.572	0.000	127.68	0.00	0.00	0.00	0.00	0.00
102	SEABED	-449.47	-42.67	0.00	548.74	0.572	0.000	127.68	0.00	0.00	0.00	0.00	0.00
103	SEABED	-455.52	-42.67	0.00	554.79	0.572	0.000	127.68	0.00	0.00	0.00	0.00	0.00
104	SEABED	-461.57	-42.67	0.00	560.84	0.572	0.000	127.68	0.00	0.00	0.00	0.00	0.00

OFFPIPE-3 OFFSHORE PIPELINE ANALYSIS SYSTEM - VERSION NO. - 3.02EX DATE - 2/23/2019 TIME - 12:13:37 PAGE 131
PROJECT - 10" PL DYNAMIC START UP STRESS AT BC PLATFORM HEADING 45 JOB NO. - FINAL PROJECT
USER ID - MZR LICENSED BY - PT Timas Suplindo CASE 9

S T A T I C P I P E C O O R D I N A T E S, F O R C E S A N D S T R E S S E S

NODE NO.	PIPE SECTION	X COORD (M)	Y COORD (M)	VERT ANGLE (DEG)	PIPE LENGTH (M)	SUPPORT REACTION (KN)	SEPARA -TION (M)	AXIAL TENSION (KN)	BENDING MOMENT (KN-M)	TENSILE STRESS (MPA)	BENDING STRESS (MPA)	TOTAL STRESS (MPA)	PERCNT YIELD (PCT)
105	SEABED	-467.62	-42.67	0.00	566.89	0.572	0.000	127.68	0.00	0.00	0.00	0.00	0.00
106	SEABED	-473.67	-42.67	0.00	572.93	0.572	0.000	127.68	0.00	0.00	0.00	0.00	0.00
107	SEABED	-479.72	-42.67	0.00	578.98	0.572	0.000	127.68	0.00	0.00	0.00	0.00	0.00
108	SEABED	-485.77	-42.67	0.00	585.03	0.572	0.000	127.68	0.00	0.00	0.00	0.00	0.00
109	SEABED	-491.82	-42.67	0.00	591.08	0.572	0.000	127.68	0.00	0.00	0.00	0.00	0.00
110	SEABED	-497.87	-42.67	0.00	597.13	0.572	0.000	127.68	0.00	0.00	0.00	0.00	0.00
111	SEABED	-503.92	-42.67	0.00	603.18	0.572	0.000	127.68	0.00	0.00	0.00	0.00	0.00
112	SEABED	-509.97	-42.67	0.00	609.23	0.572	0.000	127.68	0.00	0.00	0.00	0.00	0.00
113	SEABED	-516.02	-42.67	0.00	615.28	0.572	0.000	127.68	0.00	0.00	0.00	0.00	0.00
114	SEABED	-522.07	-42.67	0.00	621.33	0.572	0.000	127.68	0.00	0.00	0.00	0.00	0.00
115	SEABED	-528.12	-42.67	0.00	627.38	0.572	0.000	127.68	0.00	0.00	0.00	0.00	0.00
116	SEABED	-534.17	-42.67	0.00	633.43	0.572	0.000	127.68	0.00	0.00	0.00	0.00	0.00
117	SEABED	-540.22	-42.67	0.00	639.48	0.572	0.000	127.68	0.00	0.00	0.00	0.00	0.00
118	SEABED	-546.27	-42.67	0.00	645.53	0.572	0.000	127.68	0.00	0.00	0.00	0.00	0.00
119	SEABED	-552.32	-42.67	0.00	651.58	0.572	0.000	127.68	0.00	0.00	0.00	0.00	0.00
120	SEABED	-558.37	-42.67	0.00	657.63	0.572	0.000	127.68	0.00	0.00	0.00	0.00	0.00
121	SEABED	-564.42	-42.67	0.00	663.68	0.572	0.000	127.68	0.00	0.00	0.00	0.00	0.00
122	SEABED	-570.47	-42.67	0.00	669.73	0.572	0.000	127.68	0.00	0.00	0.00	0.00	0.00
123	SEABED	-576.52	-42.67	0.00	675.78	0.572	0.000	127.68	0.00	0.00	0.00	0.00	0.00
124	SEABED	-582.57	-42.67	0.00	681.83	0.572	0.000	127.68	0.00	0.00	0.00	0.00	0.00
125	SEABED	-588.62	-42.67	0.00	687.88	0.572	0.000	127.68	0.00	0.00	0.00	0.00	0.00
126	SEABED	-594.67	-42.67	0.00	693.93	0.572	0.000	127.68	0.00	0.00	0.00	0.00	0.00
127	SEABED	-600.72	-42.67	0.00	699.98	0.572	0.000	127.68	0.00	0.00	0.00	0.00	0.00
128	SEABED	-606.77	-42.67	0.00	706.03	0.572	0.000	127.68	0.00	0.00	0.00	0.00	0.00
129	SEABED	-612.82	-42.67	0.00	712.08	0.572	0.000	127.68	0.00	0.00	0.00	0.00	0.00
130	SEABED	-618.87	-42.67	0.00	718.13	0.568	0.000	127.68	0.00	0.00	0.00	0.00	0.00
131	SEABED	-624.91	-42.67	-0.01	724.18	0.508	0.000	127.68	0.00	0.00	0.00	0.00	0.00
132	SEABED	-630.85	-42.67	-0.08	730.11	0.000	0.000	127.68	0.00	0.00	0.00	0.00	0.00

OFFPIPE-3 OFFSHORE PIPELINE ANALYSIS SYSTEM - VERSION NO. - 3.02EX DATE - 2/23/2019 TIME - 12:13:37 PAGE 134
PROJECT - 10" PL DYNAMIC START UP STRESS AT BC PLATFORM HEADING 45 JOB NO. - FINAL PROJECT
USER ID - MZR LICENSED BY - PT Timas Suplindo CASE 10

S T A T I C P I P E C O O R D I N A T E S, F O R C E S A N D S T R E S S E S

NODE NO.	PIPE SECTION	X COORD (M)	Y COORD (M)	VERT ANGLE (DEG)	PIPE LENGTH (M)	SUPPORT REACTION (KN)	SEPARA -TION (M)	AXIAL TENSION (KN)	BENDING MOMENT (KN-M)	TENSILE STRESS (MPA)	BENDING STRESS (MPA)	TOTAL STRESS (MPA)	PERCNT YIELD (PCT)
1	LAYBARGE	96.31	6.41	1.93	0.00	9.946	0.000	0.00	2.75	0.00	4.25	4.25	1.18
3	LAYBARGE	84.28	6.05	1.58	12.04	24.047	0.000	-0.73	-19.05	-0.07	-29.50	29.57	8.21
5	LAYBARGE	73.45	5.73	1.91	22.87	24.723	0.000	-1.39	-30.09	-0.13	-46.58	46.72	12.98
7	TENSIONR	60.11	5.24	2.28	36.23	30.867	0.000	153.42	-21.61	14.77	-33.45	48.23	13.40
9	LAYBARGE	51.10	4.87	2.21	45.24	0.000	0.000	152.70	24.02	14.70	37.19	51.89	14.41
10	LAYBARGE	46.45	4.70	2.03	49.89	16.030	0.000	152.38	3.55	14.67	5.50	20.17	5.60
12	LAYBARGE	35.36	4.31	2.22	60.99	20.061	0.000	151.53	-39.98	14.59	-61.89	76.49	21.25
14	LAYBARGE	23.34	3.62	5.06	73.04	53.183	0.000	149.38	-177.94	14.38	-275.48	289.86	80.52
16	LAYBARGE	19.27	3.20	6.64	77.13	0.000	0.000	149.07	-116.01	14.35	-179.60	193.95	53.88
17	LAYBARGE	8.90	1.76	9.24	87.60	41.467	0.000	146.12	-114.64	14.07	-177.48	191.54	53.21
19	LAYBARGE	4.92	1.08	10.06	91.64	0.000	0.000	145.07	-39.42	13.97	-61.03	74.99	20.83
20	LAYBARGE	3.09	0.75	10.18	93.49	0.000	0.131	144.44	-12.34	13.91	-19.10	33.01	9.17
24	STINGER	-7.60	-1.12	9.32	104.35	0.000	0.115	141.77	51.32	13.59	79.45	93.10	25.86
26	STINGER	-16.64	-2.51	8.36	113.49	5.931	0.000	140.42	20.38	13.38	31.55	45.06	12.52
29	STINGER	-26.30	-3.91	8.32	123.25	19.310	0.000	139.01	-32.69	13.16	-50.61	63.98	17.77
31	STINGER	-37.11	-5.52	8.50	134.18	0.101	0.000	137.42	0.00	12.92	0.00	13.23	3.67
33	STINGER	-40.11	-5.92	7.53	137.21	0.000	0.501	137.44	0.00	0.00	0.00	0.00	0.00
35	SAGBEND	-46.24	-6.73	7.52	143.39	0.000	0.000	137.44	0.00	0.00	0.00	0.00	0.00
36	SAGBEND	-52.24	-7.52	7.51	149.44	0.000	0.000	137.44	0.00	0.00	0.00	0.00	0.00
37	SAGBEND	-58.24	-8.31	7.51	155.49	0.000	0.000	137.44	0.00	0.00	0.00	0.00	0.00
38	SAGBEND	-64.24	-9.10	7.50	161.54	0.000	0.000	137.43	0.00	0.00	0.00	0.00	0.00
39	SAGBEND	-70.24	-9.89	7.49	167.59	0.000	0.000	137.43	0.00	0.00	0.00	0.00	0.00
40	SAGBEND	-76.23	-10.68	7.49	173.64	0.000	0.000	137.43	0.00	0.00	0.00	0.00	0.00
41	SAGBEND	-82.23	-11.47	7.48	179.69	0.000	0.000	137.43	0.00	0.00	0.00	0.00	0.00
42	SAGBEND	-88.23	-12.25	7.47	185.74	0.000	0.000	137.43	0.00	0.00	0.00	0.00	0.00
43	SAGBEND	-94.23	-13.04	7.47	191.79	0.000	0.000	137.42	0.00	0.00	0.00	0.00	0.00
44	SAGBEND	-100.23	-13.82	7.46	197.84	0.000	0.000	137.42	0.00	0.00	0.00	0.00	0.00
45	SAGBEND	-106.23	-14.61	7.45	203.89	0.000	0.000	137.42	0.00	0.00	0.00	0.00	0.00
46	SAGBEND	-112.23	-15.39	7.45	209.94	0.000	0.000	137.42	0.00	0.00	0.00	0.00	0.00
47	SAGBEND	-118.22	-16.18	7.44	215.99	0.000	0.000	137.42	0.00	0.00	0.00	0.00	0.00
48	SAGBEND	-124.22	-16.96	7.43	222.04	0.000	0.000	137.41	0.00	0.00	0.00	0.00	0.00
49	SAGBEND	-130.22	-17.74	7.43	228.09	0.000	0.000	137.41	0.00	0.00	0.00	0.00	0.00
50	SAGBEND	-136.22	-18.52	7.42	234.14	0.000	0.000	137.41	0.00	0.00	0.00	0.00	0.00
51	SAGBEND	-142.22	-19.31	7.41	240.19	0.000	0.000	137.41	0.00	0.00	0.00	0.00	0.00
52	SAGBEND	-148.22	-20.09	7.41	246.24	0.000	0.000	137.41	0.00	0.00	0.00	0.00	0.00
53	SAGBEND	-154.22	-20.87	7.40	252.29	0.000	0.000	137.40	0.00	0.00	0.00	0.00	0.00
54	SAGBEND	-160.22	-21.64	7.39	258.34	0.000	0.000	137.40	0.00	0.00	0.00	0.00	0.00
55	SAGBEND	-166.22	-22.42	7.39	264.39	0.000	0.000	137.40	0.00	0.00	0.00	0.00	0.00
56	SAGBEND	-172.22	-23.20	7.38	270.44	0.000	0.000	137.40	0.00	0.00	0.00	0.00	0.00
57	SAGBEND	-178.22	-23.98	7.37	276.49	0.000	0.000	137.40	0.00	0.00	0.00	0.00	0.00
58	SAGBEND	-184.22	-24.75	7.37	282.54	0.000	0.000	137.39	0.00	0.00	0.00	0.00	0.00
59	SAGBEND	-190.22	-25.53	7.36	288.59	0.000	0.000	137.39	0.00	0.00	0.00	0.00	0.00
60	SAGBEND	-196.22	-26.30	7.36	294.64	0.000	0.000	137.39	0.00	0.00	0.00	0.00	0.00

OFFPIPE-3 OFFSHORE PIPELINE ANALYSIS SYSTEM - VERSION NO. - 3.02EX DATE - 2/23/2019 TIME - 12:13:37 PAGE 135
PROJECT - 10" PL DYNAMIC START UP STRESS AT BC PLATFORM HEADING 45 JOB NO. - FINAL PROJECT
USER ID - MZR LICENSED BY - PT Timas Suplindo CASE 10

S T A T I C P I P E C O O R D I N A T E S, F O R C E S A N D S T R E S S E S

NODE NO.	PIPE SECTION	X COORD (M)	Y COORD (M)	VERT ANGLE (DEG)	PIPE LENGTH (M)	SUPPORT REACTION (KN)	SEPARA -TION (M)	AXIAL TENSION (KN)	BENDING MOMENT (KN-M)	TENSILE STRESS (MPA)	BENDING STRESS (MPA)	TOTAL STRESS (MPA)	PERCNT YIELD (PCT)
61	SAGBEND	-202.22	-27.08	7.35	300.69	0.000	0.000	137.39	0.00	0.00	0.00	0.00	0.00

62	SAGBEND	-208.22	-27.85	7.34	306.74	0.000	0.000	137.39	0.00	0.00	0.00	0.00	0.00
63	SAGBEND	-214.22	-28.62	7.34	312.79	0.000	0.000	137.38	0.00	0.00	0.00	0.00	0.00
64	SAGBEND	-220.22	-29.40	7.33	318.84	0.000	0.000	137.38	0.00	0.00	0.00	0.00	0.00
65	SAGBEND	-226.22	-30.17	7.32	324.89	0.000	0.000	137.38	0.00	0.00	0.00	0.00	0.00
66	SAGBEND	-231.41	-30.83	7.32	330.12	0.000	0.000	137.38	0.00	0.00	0.00	0.00	0.00
67	SAGBEND	-238.22	-31.69	7.05	336.99	0.000	0.000	137.30	0.00	0.00	0.00	0.00	0.00
68	SAGBEND	-244.23	-32.42	6.81	343.04	0.000	0.000	137.23	0.00	0.00	0.00	0.00	0.00
69	SAGBEND	-250.24	-33.13	6.57	349.09	0.000	0.000	137.16	0.00	0.00	0.00	0.00	0.00
70	SAGBEND	-256.25	-33.81	6.34	355.14	0.000	0.000	137.10	0.00	0.00	0.00	0.00	0.00
71	SAGBEND	-262.26	-34.46	6.10	361.19	0.000	0.000	137.04	0.00	0.00	0.00	0.00	0.00
72	SAGBEND	-268.28	-35.09	5.86	367.24	0.000	0.000	136.98	0.00	0.00	0.00	0.00	0.00
73	SAGBEND	-274.30	-35.70	5.62	373.29	0.000	0.000	136.92	0.00	0.00	0.00	0.00	0.00
74	SAGBEND	-280.32	-36.28	5.38	379.34	0.000	0.000	136.86	0.00	0.00	0.00	0.00	0.00
75	SAGBEND	-286.35	-36.83	5.15	385.39	0.000	0.000	136.81	0.00	0.00	0.00	0.00	0.00
76	SAGBEND	-292.37	-37.36	4.91	391.44	0.000	0.000	136.76	0.00	0.00	0.00	0.00	0.00
77	SAGBEND	-298.40	-37.87	4.67	397.49	0.000	0.000	136.71	0.00	0.00	0.00	0.00	0.00
78	SAGBEND	-304.43	-38.35	4.43	403.54	0.000	0.000	136.67	0.00	0.00	0.00	0.00	0.00
79	SAGBEND	-310.47	-38.80	4.19	409.59	0.000	0.000	136.63	0.00	0.00	0.00	0.00	0.00
80	SAGBEND	-316.50	-39.23	3.95	415.64	0.000	0.000	136.58	0.00	0.00	0.00	0.00	0.00
81	SAGBEND	-322.54	-39.64	3.71	421.69	0.000	0.000	136.55	0.00	0.00	0.00	0.00	0.00
82	SAGBEND	-328.57	-40.02	3.47	427.74	0.000	0.000	136.51	0.00	0.00	0.00	0.00	0.00
83	SAGBEND	-334.61	-40.37	3.23	433.79	0.000	0.000	136.48	0.00	0.00	0.00	0.00	0.00
84	SAGBEND	-340.66	-40.70	2.99	439.84	0.000	0.000	136.45	0.00	0.00	0.00	0.00	0.00
85	SAGBEND	-346.70	-41.00	2.75	445.89	0.000	0.000	136.42	0.00	0.00	0.00	0.00	0.00
86	SAGBEND	-352.74	-41.28	2.51	451.94	0.000	0.000	136.39	0.00	0.00	0.00	0.00	0.00
87	SAGBEND	-358.79	-41.53	2.27	457.99	0.000	0.000	136.37	0.00	0.00	0.00	0.00	0.00
88	SAGBEND	-364.83	-41.76	2.03	464.04	0.000	0.000	136.35	0.00	0.00	0.00	0.00	0.00
89	SAGBEND	-370.88	-41.96	1.79	470.09	0.000	0.000	136.33	0.00	0.00	0.00	0.00	0.00
90	SAGBEND	-376.93	-42.14	1.55	476.14	0.000	0.000	136.31	0.00	0.00	0.00	0.00	0.00
91	SAGBEND	-382.97	-42.29	1.31	482.19	0.000	0.000	136.30	0.00	0.00	0.00	0.00	0.00
92	SAGBEND	-389.02	-42.42	1.07	488.24	0.000	0.000	136.28	0.00	0.00	0.00	0.00	0.00
93	SAGBEND	-395.07	-42.52	0.83	494.29	0.000	0.000	136.27	0.00	0.00	0.00	0.00	0.00
94	SAGBEND	-401.12	-42.59	0.59	500.34	0.000	0.000	136.27	0.00	0.00	0.00	0.00	0.00
95	SAGBEND	-407.17	-42.64	0.35	506.39	0.000	0.000	136.26	0.00	0.00	0.00	0.00	0.00
96	SAGBEND	-413.22	-42.67	0.11	512.44	0.103	0.000	136.26	0.00	0.00	0.00	0.00	0.00
97	SEABED	-419.27	-42.67	0.01	518.49	0.492	0.000	136.26	0.01	0.00	0.00	0.00	0.00
98	SEABED	-425.32	-42.67	0.00	524.54	0.566	0.000	136.26	0.00	0.00	0.00	0.00	0.00
99	SEABED	-431.37	-42.67	0.00	530.59	0.571	0.000	136.26	0.00	0.00	0.00	0.00	0.00
100	SEABED	-437.42	-42.67	0.00	536.64	0.572	0.000	136.26	0.00	0.00	0.00	0.00	0.00
101	SEABED	-443.47	-42.67	0.00	542.69	0.572	0.000	136.26	0.00	0.00	0.00	0.00	0.00
102	SEABED	-449.52	-42.67	0.00	548.74	0.572	0.000	136.26	0.00	0.00	0.00	0.00	0.00
103	SEABED	-455.57	-42.67	0.00	554.79	0.572	0.000	136.26	0.00	0.00	0.00	0.00	0.00
104	SEABED	-461.62	-42.67	0.00	560.84	0.572	0.000	136.26	0.00	0.00	0.00	0.00	0.00

S T A T I C P I P E C O O R D I N A T E S, F O R C E S A N D S T R E S S E S

NODE NO.	PIPE SECTION	X COORD (M)	Y COORD (M)	VERT ANGLE (DEG)	PIPE LENGTH (M)	SUPPORT REACTION (KN)	SEPARA -TION (M)	AXIAL TENSION (KN)	BENDING MOMENT (KN-M)	TENSILE STRESS (MPA)	BENDING STRESS (MPA)	TOTAL STRESS (MPA)	PERCNT YIELD (PCT)
105	SEABED	-467.67	-42.67	0.00	566.89	0.572	0.000	136.26	0.00	0.00	0.00	0.00	0.00
106	SEABED	-473.72	-42.67	0.00	572.94	0.572	0.000	136.26	0.00	0.00	0.00	0.00	0.00
107	SEABED	-479.77	-42.67	0.00	578.99	0.572	0.000	136.26	0.00	0.00	0.00	0.00	0.00
108	SEABED	-485.82	-42.67	0.00	585.04	0.572	0.000	136.26	0.00	0.00	0.00	0.00	0.00
109	SEABED	-491.87	-42.67	0.00	591.08	0.572	0.000	136.26	0.00	0.00	0.00	0.00	0.00
110	SEABED	-497.92	-42.67	0.00	597.13	0.572	0.000	136.26	0.00	0.00	0.00	0.00	0.00
111	SEABED	-503.97	-42.67	0.00	603.18	0.572	0.000	136.26	0.00	0.00	0.00	0.00	0.00
112	SEABED	-510.02	-42.67	0.00	609.23	0.572	0.000	136.26	0.00	0.00	0.00	0.00	0.00
113	SEABED	-516.07	-42.67	0.00	615.28	0.572	0.000	136.26	0.00	0.00	0.00	0.00	0.00
114	SEABED	-522.12	-42.67	0.00	621.33	0.572	0.000	136.26	0.00	0.00	0.00	0.00	0.00
115	SEABED	-528.17	-42.67	0.00	627.38	0.572	0.000	136.26	0.00	0.00	0.00	0.00	0.00
116	SEABED	-534.22	-42.67	0.00	633.43	0.572	0.000	136.26	0.00	0.00	0.00	0.00	0.00
117	SEABED	-540.27	-42.67	0.00	639.48	0.572	0.000	136.26	0.00	0.00	0.00	0.00	0.00
118	SEABED	-546.32	-42.67	0.00	645.53	0.572	0.000	136.26	0.00	0.00	0.00	0.00	0.00
119	SEABED	-552.37	-42.67	0.00	651.58	0.572	0.000	136.26	0.00	0.00	0.00	0.00	0.00
120	SEABED	-558.42	-42.67	0.00	657.63	0.572	0.000	136.26	0.00	0.00	0.00	0.00	0.00
121	SEABED	-564.47	-42.67	0.00	663.68	0.572	0.000	136.26	0.00	0.00	0.00	0.00	0.00
122	SEABED	-570.52	-42.67	0.00	669.73	0.572	0.000	136.26	0.00	0.00	0.00	0.00	0.00
123	SEABED	-576.57	-42.67	0.00	675.78	0.572	0.000	136.26	0.00	0.00	0.00	0.00	0.00
124	SEABED	-582.62	-42.67	0.00	681.83	0.572	0.000	136.26	0.00	0.00	0.00	0.00	0.00
125	SEABED	-588.67	-42.67	0.00	687.88	0.572	0.000	136.26	0.00	0.00	0.00	0.00	0.00
126	SEABED	-594.72	-42.67	0.00	693.93	0.572	0.000	136.26	0.00	0.00	0.00	0.00	0.00
127	SEABED	-600.77	-42.67	0.00	699.98	0.572	0.000	136.26	0.00	0.00	0.00	0.00	0.00
128	SEABED	-606.82	-42.67	0.00	706.03	0.572	0.000	136.26	0.00	0.00	0.00	0.00	0.00
129	SEABED	-612.87	-42.67	0.00	712.08	0.571	0.000	136.26	0.00	0.00	0.00	0.00	0.00
130	SEABED	-618.92	-42.67	0.00	718.13	0.567	0.000	136.26	0.00	0.00	0.00	0.00	0.00
131	SEABED	-624.97	-42.67	-0.01	724.18	0.505	0.000	136.26	0.00	0.00	0.00	0.00	0.00
132	SEABED	-630.90	-42.67	-0.08	730.11	0.000	0.000	136.26	0.00	0.00	0.00	0.00	0.00

S T A T I C P I P E C O O R D I N A T E S, F O R C E S A N D S T R E S S E S

NODE NO.	PIPE SECTION	X COORD (M)	Y COORD (M)	VERT ANGLE (DEG)	PIPE LENGTH (M)	SUPPORT REACTION (KN)	SEPARA -TION (M)	AXIAL TENSION (KN)	BENDING MOMENT (KN-M)	TENSILE STRESS (MPA)	BENDING STRESS (MPA)	TOTAL STRESS (MPA)	PERCNT YIELD (PCT)
1	LAYBARGE	96.31	6.41	1.93	0.00	9.946	0.000	0.00	2.75	0.00	4.25	4.25	1.18
3	LAYBARGE	84.28	6.05	1.58	12.04	24.050	0.000	-0.73	-19.06	-0.07	-29.51	29.58	8.22
5	LAYBARGE	73.45	5.73	1.90	22.87	24.713	0.000	-1.39	-30.07	-0.13	-46.55	46.68	12.97
7	TENSIONR	60.11	5.24	2.28	36.23	30.903	0.000	153.42	-21.66	14.77	-33.54	48.31	13.42
9	LAYBARGE	51.10	4.87	2.21	45.24	0.000	0.000	152.70	24.19	14.70	37.45	52.16	14.49
10	LAYBARGE	46.45	4.70	2.02	49.89	15.842	0.000	152.38	3.83	14.67	5.93	20.60	5.72
12	LAYBARGE	35.36	4.31	2.23	60.99	20.789	0.000	151.53	-40.86	14.59	-63.25	77.84	21.62
14	LAYBARGE	23.34	3.62	5.02	73.04	50.839	0.000	149.43	-173.13	14.39	-268.03	282.42	78.45
16	LAYBARGE	19.27	3.21	6.57	77.13	0.000	0.000	149.07	-117.14	14.35	-181.35	195.70	54.36
17	LAYBARGE	8.90	1.76	9.45	87.60	45.131	0.000	145.99	-134.00	14.06	-207.45	221.51	61.53
19	LAYBARGE	4.92	1.06	10.45	91.64	0.000	0.000	144.99	-55.23	13.96	-85.51	99.47	27.63
20	LAYBARGE	3.10	0.72	10.64	93.49	0.000	0.096	144.36	-26.63	13.90	-41.23	55.13	15.31
24	STINGER	-7.59	-1.27	10.08	104.36	0.000	0.071	141.63	43.00	13.57	66.58	80.21	22.28
26	STINGER	-16.61	-2.80	9.29	113.51	7.567	0.000	140.14	14.08	13.34	21.80	35.29	9.80
29	STINGER	-26.26	-4.36	9.21	123.29	17.137	0.000	138.57	-23.12	13.10	-35.80	49.13	13.65
31	STINGER	-37.05	-6.12	9.15	134.22	0.792	0.000	136.83	8.53	12.83	13.20	26.37	7.32
33	STINGER	-40.01	-6.59	9.11	137.21	0.000	0.458	136.36	0.00	12.76	0.00	13.13	3.65
35	SAGBEND	-46.14	-7.38	7.30	143.40	0.000	0.000	136.42	0.00	0.00	0.00	0.00	0.00
36	SAGBEND	-52.14	-8.15	7.29	149.45	0.000	0.000	136.42	0.00	0.00	0.00	0.00	0.00
37	SAGBEND	-58.14	-8.91	7.29	155.50	0.000	0.000	136.42	0.00	0.00	0.00	0.00	0.00
38	SAGBEND	-64.14	-9.68	7.28	161.55	0.000	0.000	136.41	0.00	0.00	0.00	0.00	0.00
39	SAGBEND	-70.15	-10.45	7.27	167.60	0.000	0.000	136.41	0.00	0.00	0.00	0.00	0.00
40	SAGBEND	-76.15	-11.21	7.27	173.65	0.000	0.000	136.41	0.00	0.00	0.00	0.00	0.00
41	SAGBEND	-82.15	-11.98	7.26	179.70	0.000	0.000	136.41	0.00	0.00	0.00	0.00	0.00
42	SAGBEND	-88.15	-12.74	7.25	185.75	0.000	0.000	136.41	0.00	0.00	0.00	0.00	0.00
43	SAGBEND	-94.15	-13.51	7.25	191.80	0.000	0.000	136.40	0.00	0.00	0.00	0.00	0.00
44	SAGBEND	-100.15	-14.27	7.24	197.85	0.000	0.000	136.40	0.00	0.00	0.00	0.00	0.00
45	SAGBEND	-106.15	-15.03	7.23	203.90	0.000	0.000	136.40	0.00	0.00	0.00	0.00	0.00
46	SAGBEND	-112.16	-15.79	7.23	209.95	0.000	0.000	136.40	0.00	0.00	0.00	0.00	0.00
47	SAGBEND	-118.16	-16.55	7.22	216.00	0.000	0.000	136.40	0.00	0.00	0.00	0.00	0.00
48	SAGBEND	-124.16	-17.31	7.21	222.05	0.000	0.000	136.39	0.00	0.00	0.00	0.00	0.00
49	SAGBEND	-130.16	-18.07	7.21	228.10	0.000	0.000	136.39	0.00	0.00	0.00	0.00	0.00
50	SAGBEND	-136.16	-18.83	7.20	234.15	0.000	0.000	136.39	0.00	0.00	0.00	0.00	0.00
51	SAGBEND	-142.17	-19.59	7.19	240.20	0.000	0.000	136.39	0.00	0.00	0.00	0.00	0.00
52	SAGBEND	-148.17	-20.35	7.19	246.25	0.000	0.000	136.39	0.00	0.00	0.00	0.00	0.00
53	SAGBEND	-154.17	-21.10	7.18	252.30	0.000	0.000	136.38	0.00	0.00	0.00	0.00	0.00
54	SAGBEND	-160.17	-21.86	7.17	258.35	0.000	0.000	136.38	0.00	0.00	0.00	0.00	0.00
55	SAGBEND	-166.18	-22.62	7.17	264.40	0.000	0.000	136.38	0.00	0.00	0.00	0.00	0.00
56	SAGBEND	-172.18	-23.37	7.16	270.45	0.000	0.000	136.38	0.00	0.00	0.00	0.00	0.00
57	SAGBEND	-178.18	-24.12	7.16	276.50	0.000	0.000	136.38	0.00	0.00	0.00	0.00	0.00
58	SAGBEND	-184.19	-24.88	7.15	282.55	0.000	0.000	136.38	0.00	0.00	0.00	0.00	0.00
59	SAGBEND	-190.19	-25.63	7.14	288.60	0.000	0.000	136.37	0.00	0.00	0.00	0.00	0.00
60	SAGBEND	-196.19	-26.38	7.14	294.64	0.000	0.000	136.37	0.00	0.00	0.00	0.00	0.00

S T A T I C P I P E C O O R D I N A T E S, F O R C E S A N D S T R E S S E S

NODE NO.	PIPE SECTION	X COORD (M)	Y COORD (M)	VERT ANGLE (DEG)	PIPE LENGTH (M)	SUPPORT REACTION (KN)	SEPARA -TION (M)	AXIAL TENSION (KN)	BENDING MOMENT (KN-M)	TENSILE STRESS (MPA)	BENDING STRESS (MPA)	TOTAL STRESS (MPA)	PERCNT YIELD (PCT)
61	SAGBEND	-202.19	-27.13	7.13	300.69	0.000	0.000	136.37	0.00	0.00	0.00	0.00	0.00
62	SAGBEND	-208.20	-27.88	7.12	306.74	0.000	0.000	136.37	0.00	0.00	0.00	0.00	0.00
63	SAGBEND	-214.20	-28.63	7.12	312.79	0.000	0.000	136.37	0.00	0.00	0.00	0.00	0.00
64	SAGBEND	-220.20	-29.38	7.11	318.84	0.000	0.000	136.36	0.00	0.00	0.00	0.00	0.00
65	SAGBEND	-226.21	-30.13	7.10	324.89	0.000	0.000	136.36	0.00	0.00	0.00	0.00	0.00
66	SAGBEND	-232.21	-30.88	7.10	330.94	0.000	0.000	136.36	0.00	0.00	0.00	0.00	0.00
67	SAGBEND	-235.28	-31.26	7.09	334.04	0.000	0.000	136.36	0.00	0.00	0.00	0.00	0.00
68	SAGBEND	-238.35	-31.64	7.09	337.13	0.000	0.000	136.36	0.00	0.00	0.00	0.00	0.00
69	SAGBEND	-244.22	-32.36	6.86	343.04	0.000	0.000	136.29	0.00	0.00	0.00	0.00	0.00
70	SAGBEND	-250.23	-33.07	6.62	349.09	0.000	0.000	136.22	0.00	0.00	0.00	0.00	0.00
71	SAGBEND	-256.24	-33.75	6.38	355.14	0.000	0.000	136.16	0.00	0.00	0.00	0.00	0.00
72	SAGBEND	-262.25	-34.41	6.14	361.19	0.000	0.000	136.10	0.00	0.00	0.00	0.00	0.00
73	SAGBEND	-268.27	-35.05	5.90	367.24	0.000	0.000	136.04	0.00	0.00	0.00	0.00	0.00

74	SAGBEND	-274.29	-35.66	5.66	373.29	0.000	0.000	135.98	0.00	0.00	0.00	0.00	0.00
75	SAGBEND	-280.31	-36.24	5.42	379.34	0.000	0.000	135.92	0.00	0.00	0.00	0.00	0.00
76	SAGBEND	-286.33	-36.80	5.18	385.39	0.000	0.000	135.87	0.00	0.00	0.00	0.00	0.00
77	SAGBEND	-292.36	-37.33	4.94	391.44	0.000	0.000	135.82	0.00	0.00	0.00	0.00	0.00
78	SAGBEND	-298.39	-37.84	4.70	397.49	0.000	0.000	135.77	0.00	0.00	0.00	0.00	0.00
79	SAGBEND	-304.42	-38.32	4.46	403.54	0.000	0.000	135.73	0.00	0.00	0.00	0.00	0.00
80	SAGBEND	-310.45	-38.78	4.22	409.59	0.000	0.000	135.68	0.00	0.00	0.00	0.00	0.00
81	SAGBEND	-316.49	-39.21	3.98	415.64	0.000	0.000	135.64	0.00	0.00	0.00	0.00	0.00
82	SAGBEND	-322.52	-39.62	3.74	421.69	0.000	0.000	135.60	0.00	0.00	0.00	0.00	0.00
83	SAGBEND	-328.56	-40.00	3.50	427.74	0.000	0.000	135.57	0.00	0.00	0.00	0.00	0.00
84	SAGBEND	-334.60	-40.36	3.25	433.79	0.000	0.000	135.53	0.00	0.00	0.00	0.00	0.00
85	SAGBEND	-340.64	-40.69	3.01	439.84	0.000	0.000	135.50	0.00	0.00	0.00	0.00	0.00
86	SAGBEND	-346.68	-40.99	2.77	445.89	0.000	0.000	135.47	0.00	0.00	0.00	0.00	0.00
87	SAGBEND	-352.73	-41.27	2.53	451.94	0.000	0.000	135.45	0.00	0.00	0.00	0.00	0.00
88	SAGBEND	-358.77	-41.53	2.29	457.99	0.000	0.000	135.42	0.00	0.00	0.00	0.00	0.00
89	SAGBEND	-364.82	-41.76	2.05	464.04	0.000	0.000	135.40	0.00	0.00	0.00	0.00	0.00
90	SAGBEND	-370.86	-41.96	1.80	470.09	0.000	0.000	135.38	0.00	0.00	0.00	0.00	0.00
91	SAGBEND	-376.91	-42.14	1.56	476.14	0.000	0.000	135.37	0.00	0.00	0.00	0.00	0.00
92	SAGBEND	-382.96	-42.29	1.32	482.19	0.000	0.000	135.35	0.00	0.00	0.00	0.00	0.00
93	SAGBEND	-389.01	-42.42	1.08	488.24	0.000	0.000	135.34	0.00	0.00	0.00	0.00	0.00
94	SAGBEND	-395.06	-42.52	0.84	494.29	0.000	0.000	135.33	0.00	0.00	0.00	0.00	0.00
95	SAGBEND	-401.11	-42.59	0.59	500.34	0.000	0.000	135.32	0.00	0.00	0.00	0.00	0.00
96	SAGBEND	-407.15	-42.64	0.35	506.39	0.000	0.000	135.32	0.00	0.00	0.00	0.00	0.00
97	SAGBEND	-413.20	-42.67	0.11	512.44	0.107	0.000	135.32	0.00	0.00	0.00	0.00	0.00
98	SEABED	-419.25	-42.67	0.01	518.49	0.495	0.000	135.32	0.01	0.00	0.00	0.00	0.00
99	SEABED	-425.30	-42.67	0.00	524.54	0.567	0.000	135.32	0.00	0.00	0.00	0.00	0.00
100	SEABED	-431.35	-42.67	0.00	530.59	0.571	0.000	135.32	0.00	0.00	0.00	0.00	0.00
101	SEABED	-437.40	-42.67	0.00	536.64	0.572	0.000	135.32	0.00	0.00	0.00	0.00	0.00
102	SEABED	-443.45	-42.67	0.00	542.69	0.572	0.000	135.32	0.00	0.00	0.00	0.00	0.00
103	SEABED	-449.50	-42.67	0.00	548.74	0.572	0.000	135.32	0.00	0.00	0.00	0.00	0.00
104	SEABED	-455.55	-42.67	0.00	554.79	0.572	0.000	135.32	0.00	0.00	0.00	0.00	0.00

S T A T I C P I P E C O O R D I N A T E S, F O R C E S A N D S T R E S S E S

NODE NO.	PIPE SECTION	X COORD (M)	Y COORD (M)	VERT ANGLE (DEG)	PIPE LENGTH (M)	SUPPORT REACTION (KN)	SEPARA -TION (M)	AXIAL TENSION (KN)	BENDING MOMENT (KN-M)	TENSILE STRESS (MPA)	BENDING STRESS (MPA)	TOTAL STRESS (MPA)	PERCNT YIELD (PCT)
105	SEABED	-461.60	-42.67	0.00	560.84	0.572	0.000	135.32	0.00	0.00	0.00	0.00	0.00
106	SEABED	-467.65	-42.67	0.00	566.89	0.572	0.000	135.32	0.00	0.00	0.00	0.00	0.00
107	SEABED	-473.70	-42.67	0.00	572.94	0.572	0.000	135.32	0.00	0.00	0.00	0.00	0.00
108	SEABED	-479.75	-42.67	0.00	578.99	0.572	0.000	135.32	0.00	0.00	0.00	0.00	0.00
109	SEABED	-485.80	-42.67	0.00	585.04	0.572	0.000	135.32	0.00	0.00	0.00	0.00	0.00
110	SEABED	-491.85	-42.67	0.00	591.09	0.572	0.000	135.32	0.00	0.00	0.00	0.00	0.00
111	SEABED	-497.90	-42.67	0.00	597.14	0.572	0.000	135.32	0.00	0.00	0.00	0.00	0.00
112	SEABED	-503.95	-42.67	0.00	603.19	0.572	0.000	135.32	0.00	0.00	0.00	0.00	0.00
113	SEABED	-510.00	-42.67	0.00	609.24	0.572	0.000	135.32	0.00	0.00	0.00	0.00	0.00
114	SEABED	-516.05	-42.67	0.00	615.29	0.572	0.000	135.32	0.00	0.00	0.00	0.00	0.00
115	SEABED	-522.10	-42.67	0.00	621.34	0.572	0.000	135.32	0.00	0.00	0.00	0.00	0.00
116	SEABED	-528.15	-42.67	0.00	627.39	0.572	0.000	135.32	0.00	0.00	0.00	0.00	0.00
117	SEABED	-534.20	-42.67	0.00	633.44	0.572	0.000	135.32	0.00	0.00	0.00	0.00	0.00
118	SEABED	-540.25	-42.67	0.00	639.49	0.572	0.000	135.32	0.00	0.00	0.00	0.00	0.00
119	SEABED	-546.30	-42.67	0.00	645.54	0.572	0.000	135.32	0.00	0.00	0.00	0.00	0.00
120	SEABED	-552.35	-42.67	0.00	651.59	0.572	0.000	135.32	0.00	0.00	0.00	0.00	0.00
121	SEABED	-558.40	-42.67	0.00	657.64	0.572	0.000	135.32	0.00	0.00	0.00	0.00	0.00
122	SEABED	-564.45	-42.67	0.00	663.69	0.572	0.000	135.32	0.00	0.00	0.00	0.00	0.00
123	SEABED	-570.50	-42.67	0.00	669.74	0.572	0.000	135.32	0.00	0.00	0.00	0.00	0.00
124	SEABED	-576.55	-42.67	0.00	675.79	0.572	0.000	135.32	0.00	0.00	0.00	0.00	0.00
125	SEABED	-582.60	-42.67	0.00	681.84	0.572	0.000	135.32	0.00	0.00	0.00	0.00	0.00
126	SEABED	-588.65	-42.67	0.00	687.89	0.572	0.000	135.32	0.00	0.00	0.00	0.00	0.00
127	SEABED	-594.70	-42.67	0.00	693.94	0.572	0.000	135.32	0.00	0.00	0.00	0.00	0.00
128	SEABED	-600.75	-42.67	0.00	699.99	0.572	0.000	135.32	0.00	0.00	0.00	0.00	0.00
129	SEABED	-606.80	-42.67	0.00	706.04	0.572	0.000	135.32	0.00	0.00	0.00	0.00	0.00
130	SEABED	-612.85	-42.67	0.00	712.09	0.572	0.000	135.32	0.00	0.00	0.00	0.00	0.00
131	SEABED	-618.90	-42.67	0.00	718.14	0.571	0.000	135.32	0.00	0.00	0.00	0.00	0.00
132	SEABED	-624.95	-42.67	0.00	724.19	0.569	0.000	135.32	0.00	0.00	0.00	0.00	0.00
133	SEABED	-631.00	-42.67	0.00	730.24	0.430	0.000	135.32	0.00	0.00	0.00	0.00	0.00
134	SEABED	-634.44	-42.67	-0.02	733.68	0.244	0.000	135.32	0.00	0.00	0.00	0.00	0.00
135	SEABED	-637.88	-42.67	-0.09	737.12	0.000	0.000	135.32	0.00	0.00	0.00	0.00	0.00

S T A T I C P I P E C O O R D I N A T E S, F O R C E S A N D S T R E S S E S

NODE NO.	PIPE SECTION	X COORD (M)	Y COORD (M)	VERT ANGLE (DEG)	PIPE LENGTH (M)	SUPPORT REACTION (KN)	SEPARA -TION (M)	AXIAL TENSION (KN)	BENDING MOMENT (KN-M)	TENSILE STRESS (MPA)	BENDING STRESS (MPA)	TOTAL STRESS (MPA)	PERCNT YIELD (PCT)
1	LAYBARGE	96.31	6.41	1.93	0.00	9.947	0.000	0.00	2.75	0.00	4.25	4.25	1.18
3	LAYBARGE	84.28	6.05	1.58	12.04	24.045	0.000	-0.73	-19.05	-0.07	-29.50	29.57	8.21
5	LAYBARGE	73.45	5.73	1.91	22.87	24.730	0.000	-1.39	-30.10	-0.13	-46.60	46.74	12.98
7	TENSIONR	60.11	5.24	2.28	36.23	30.884	0.000	177.52	-21.55	17.09	-33.36	50.45	14.01
9	LAYBARGE	51.10	4.87	2.21	45.24	0.000	0.000	176.80	23.91	17.02	37.01	54.04	15.01
10	LAYBARGE	46.45	4.70	2.03	49.89	15.775	0.000	176.48	3.82	16.99	5.92	22.91	6.36
12	LAYBARGE	35.36	4.31	2.23	60.99	20.774	0.000	175.63	-40.39	16.91	-62.53	79.44	22.07
14	LAYBARGE	23.34	3.62	5.05	73.04	54.330	0.000	173.48	-177.92	16.70	-275.44	292.15	81.15
16	LAYBARGE	19.27	3.20	6.62	77.13	0.000	0.000	173.17	-115.77	16.67	-179.23	195.90	54.42
17	LAYBARGE	8.89	1.76	9.30	87.60	43.748	0.000	170.17	-121.73	16.39	-188.45	204.84	56.90
19	LAYBARGE	4.92	1.07	10.19	91.64	0.000	0.000	169.14	-45.13	16.29	-69.87	86.15	23.93
20	LAYBARGE	3.09	0.74	10.33	93.49	0.000	0.120	168.52	-17.68	16.23	-27.38	43.60	12.11
24	STINGER	-7.60	-1.17	9.60	104.35	0.000	0.101	165.82	47.49	15.90	73.52	89.48	24.86
26	STINGER	-16.63	-2.61	8.69	113.50	5.532	0.000	164.42	20.35	15.68	31.50	47.33	13.15
29	STINGER	-26.30	-4.07	8.63	123.27	19.624	0.000	162.96	-30.70	15.46	-47.53	63.21	17.56
31	STINGER	-37.09	-5.73	8.66	134.19	0.004	0.000	161.32	8.84	15.21	13.69	29.22	8.12
33	STINGER	-40.06	-6.18	8.62	137.20	0.000	0.456	160.87	0.00	15.14	0.00	15.48	4.30
35	SAGBEND	-46.21	-6.94	7.05	143.40	0.000	0.000	160.93	0.00	0.00	0.00	0.00	0.00
36	SAGBEND	-52.22	-7.68	7.05	149.45	0.000	0.000	160.93	0.00	0.00	0.00	0.00	0.00
37	SAGBEND	-58.22	-8.42	7.04	155.50	0.000	0.000	160.92	0.00	0.00	0.00	0.00	0.00
38	SAGBEND	-64.23	-9.17	7.04	161.55	0.000	0.000	160.92	0.00	0.00	0.00	0.00	0.00
39	SAGBEND	-70.23	-9.91	7.03	167.60	0.000	0.000	160.92	0.00	0.00	0.00	0.00	0.00
40	SAGBEND	-76.23	-10.65	7.03	173.65	0.000	0.000	160.92	0.00	0.00	0.00	0.00	0.00
41	SAGBEND	-82.24	-11.39	7.02	179.70	0.000	0.000	160.92	0.00	0.00	0.00	0.00	0.00
42	SAGBEND	-88.24	-12.13	7.01	185.75	0.000	0.000	160.91	0.00	0.00	0.00	0.00	0.00
43	SAGBEND	-94.25	-12.86	7.01	191.80	0.000	0.000	160.91	0.00	0.00	0.00	0.00	0.00
44	SAGBEND	-100.25	-13.60	7.00	197.85	0.000	0.000	160.91	0.00	0.00	0.00	0.00	0.00
45	SAGBEND	-106.26	-14.34	7.00	203.90	0.000	0.000	160.91	0.00	0.00	0.00	0.00	0.00
46	SAGBEND	-112.26	-15.08	6.99	209.95	0.000	0.000	160.91	0.00	0.00	0.00	0.00	0.00
47	SAGBEND	-118.27	-15.81	6.99	216.00	0.000	0.000	160.90	0.00	0.00	0.00	0.00	0.00
48	SAGBEND	-124.27	-16.55	6.98	222.05	0.000	0.000	160.90	0.00	0.00	0.00	0.00	0.00
49	SAGBEND	-130.28	-17.28	6.98	228.10	0.000	0.000	160.90	0.00	0.00	0.00	0.00	0.00
50	SAGBEND	-136.28	-18.02	6.97	234.15	0.000	0.000	160.90	0.00	0.00	0.00	0.00	0.00
51	SAGBEND	-142.29	-18.75	6.96	240.20	0.000	0.000	160.90	0.00	0.00	0.00	0.00	0.00
52	SAGBEND	-148.29	-19.49	6.96	246.25	0.000	0.000	160.89	0.00	0.00	0.00	0.00	0.00
53	SAGBEND	-154.30	-20.22	6.95	252.30	0.000	0.000	160.89	0.00	0.00	0.00	0.00	0.00
54	SAGBEND	-160.30	-20.95	6.95	258.35	0.000	0.000	160.89	0.00	0.00	0.00	0.00	0.00
55	SAGBEND	-166.31	-21.68	6.94	264.40	0.000	0.000	160.89	0.00	0.00	0.00	0.00	0.00
56	SAGBEND	-172.32	-22.41	6.94	270.45	0.000	0.000	160.89	0.00	0.00	0.00	0.00	0.00
57	SAGBEND	-178.32	-23.14	6.93	276.50	0.000	0.000	160.88	0.00	0.00	0.00	0.00	0.00
58	SAGBEND	-184.33	-23.87	6.93	282.55	0.000	0.000	160.88	0.00	0.00	0.00	0.00	0.00
59	SAGBEND	-190.33	-24.60	6.92	288.60	0.000	0.000	160.88	0.00	0.00	0.00	0.00	0.00
60	SAGBEND	-196.34	-25.33	6.91	294.65	0.000	0.000	160.88	0.00	0.00	0.00	0.00	0.00

S T A T I C P I P E C O O R D I N A T E S, F O R C E S A N D S T R E S S E S

NODE NO.	PIPE SECTION	X COORD (M)	Y COORD (M)	VERT ANGLE (DEG)	PIPE LENGTH (M)	SUPPORT REACTION (KN)	SEPARA -TION (M)	AXIAL TENSION (KN)	BENDING MOMENT (KN-M)	TENSILE STRESS (MPA)	BENDING STRESS (MPA)	TOTAL STRESS (MPA)	PERCNT YIELD (PCT)
61	SAGBEND	-202.35	-26.06	6.91	300.70	0.000	0.000	160.88	0.00	0.00	0.00	0.00	0.00
62	SAGBEND	-208.35	-26.79	6.90	306.75	0.000	0.000	160.88	0.00	0.00	0.00	0.00	0.00
63	SAGBEND	-214.36	-27.51	6.90	312.80	0.000	0.000	160.87	0.00	0.00	0.00	0.00	0.00
64	SAGBEND	-220.36	-28.24	6.89	318.85	0.000	0.000	160.87	0.00	0.00	0.00	0.00	0.00
65	SAGBEND	-226.37	-28.96	6.89	324.89	0.000	0.000	160.87	0.00	0.00	0.00	0.00	0.00
66	SAGBEND	-232.38	-29.69	6.88	330.94	0.000	0.000	160.87	0.00	0.00	0.00	0.00	0.00
67	SAGBEND	-235.44	-30.06	6.88	334.04	0.000	0.000	160.87	0.00	0.00	0.00	0.00	0.00
68	SAGBEND	-238.51	-30.43	6.87	337.13	0.000	0.000	160.87	0.00	0.00	0.00	0.00	0.00
69	SAGBEND	-244.39	-31.13	6.68	343.04	0.000	0.000	160.80	0.00	0.00	0.00	0.00	0.00
70	SAGBEND	-250.40	-31.82	6.47	349.09	0.000	0.000	160.73	0.00	0.00	0.00	0.00	0.00
71	SAGBEND	-256.41	-32.49	6.27	355.14	0.000	0.000	160.67	0.00	0.00	0.00	0.00	0.00
72	SAGBEND	-262.43	-33.14	6.07	361.19	0.000	0.000	160.61	0.00	0.00	0.00	0.00	0.00
73	SAGBEND	-268.45	-33.77	5.87	367.24	0.000	0.000	160.55	0.00	0.00	0.00	0.00	0.00
74	SAGBEND	-274.46	-34.38	5.66	373.29	0.000	0.000	160.49	0.00	0.00	0.00	0.00	0.00
75	SAGBEND	-280.49	-34.97	5.46	379.34	0.000	0.000	160.44	0.00	0.00	0.00	0.00	0.00
76	SAGBEND	-286.51	-35.53	5.26	385.39	0.000	0.000	160.38	0.00	0.00	0.00	0.00	0.00
77	SAGBEND	-292.53	-36.07	5.05	391.44	0.000	0.000	160.33	0.00	0.00	0.00	0.00	0.00
78	SAGBEND	-298.56	-36.60	4.85	397.49	0.000	0.000	160.28	0.00	0.00	0.00	0.00	0.00
79	SAGBEND	-304.59	-37.10	4.65	403.54	0.000	0.000	160.24	0.00	0.00	0.00	0.00	0.00
80	SAGBEND	-310.62	-37.58	4.44	409.59	0.000	0.000	160.19	0.00	0.00	0.00	0.00	0.00
81	SAGBEND	-316.65	-38.03	4.24	415.64	0.000	0.000	160.15	0.00	0.00	0.00	0.00	0.00
82	SAGBEND	-322.69	-38.47	4.03	421.69	0.000	0.000	160.11	0.00	0.00	0.00	0.00	0.00

83	SAGBEND	-328.72	-38.89	3.83	427.74	0.000	0.000	160.07	0.00	0.00	0.00	0.00	0.00
84	SAGBEND	-334.76	-39.28	3.63	433.79	0.000	0.000	160.03	0.00	0.00	0.00	0.00	0.00
85	SAGBEND	-340.80	-39.65	3.42	439.84	0.000	0.000	159.99	0.00	0.00	0.00	0.00	0.00
86	SAGBEND	-346.84	-40.00	3.22	445.89	0.000	0.000	159.96	0.00	0.00	0.00	0.00	0.00
87	SAGBEND	-352.88	-40.33	3.01	451.94	0.000	0.000	159.93	0.00	0.00	0.00	0.00	0.00
88	SAGBEND	-358.92	-40.64	2.81	457.99	0.000	0.000	159.90	0.00	0.00	0.00	0.00	0.00
89	SAGBEND	-364.97	-40.92	2.60	464.04	0.000	0.000	159.87	0.00	0.00	0.00	0.00	0.00
90	SAGBEND	-371.01	-41.19	2.40	470.09	0.000	0.000	159.85	0.00	0.00	0.00	0.00	0.00
91	SAGBEND	-377.05	-41.43	2.20	476.14	0.000	0.000	159.83	0.00	0.00	0.00	0.00	0.00
92	SAGBEND	-383.10	-41.65	1.99	482.19	0.000	0.000	159.81	0.00	0.00	0.00	0.00	0.00
93	SAGBEND	-389.15	-41.85	1.79	488.24	0.000	0.000	159.79	0.00	0.00	0.00	0.00	0.00
94	SAGBEND	-395.19	-42.03	1.58	494.29	0.000	0.000	159.77	0.00	0.00	0.00	0.00	0.00
95	SAGBEND	-401.24	-42.18	1.38	500.34	0.000	0.000	159.76	0.00	0.00	0.00	0.00	0.00
96	SAGBEND	-407.29	-42.32	1.17	506.39	0.000	0.000	159.74	0.00	0.00	0.00	0.00	0.00
97	SAGBEND	-413.34	-42.43	0.97	512.44	0.000	0.000	159.73	0.00	0.00	0.00	0.00	0.00
98	SAGBEND	-419.39	-42.52	0.76	518.49	0.000	0.000	159.72	0.00	0.00	0.00	0.00	0.00
99	SAGBEND	-425.44	-42.59	0.56	524.54	0.000	0.000	159.72	0.00	0.00	0.00	0.00	0.00
100	SAGBEND	-431.49	-42.64	0.35	530.59	0.000	0.000	159.71	0.00	0.00	0.00	0.00	0.00
101	SAGBEND	-437.54	-42.67	0.15	536.64	0.042	0.000	159.71	0.00	0.00	0.00	0.00	0.00
102	SEABED	-443.59	-42.67	0.01	542.69	0.423	0.000	159.71	0.00	0.00	0.00	0.00	0.00
103	SEABED	-449.64	-42.67	0.00	548.74	0.559	0.000	159.71	0.00	0.00	0.00	0.00	0.00
104	SEABED	-455.69	-42.67	0.00	554.79	0.571	0.000	159.71	0.00	0.00	0.00	0.00	0.00

S T A T I C P I P E C O O R D I N A T E S, F O R C E S A N D S T R E S S E S

NODE NO.	PIPE SECTION	X COORD (M)	Y COORD (M)	VERT ANGLE (DEG)	PIPE LENGTH (M)	SUPPORT REACTION (KN)	SEPARA -TION (M)	AXIAL TENSION (KN)	BENDING MOMENT (KN-M)	TENSILE STRESS (MPA)	BENDING STRESS (MPA)	TOTAL STRESS (MPA)	PERCNT YIELD (PCT)
105	SEABED	-461.74	-42.67	0.00	560.84	0.571	0.000	159.71	0.00	0.00	0.00	0.00	0.00
106	SEABED	-467.79	-42.67	0.00	566.89	0.572	0.000	159.71	0.00	0.00	0.00	0.00	0.00
107	SEABED	-473.84	-42.67	0.00	572.94	0.572	0.000	159.71	0.00	0.00	0.00	0.00	0.00
108	SEABED	-479.89	-42.67	0.00	578.99	0.572	0.000	159.71	0.00	0.00	0.00	0.00	0.00
109	SEABED	-485.94	-42.67	0.00	585.04	0.572	0.000	159.71	0.00	0.00	0.00	0.00	0.00
110	SEABED	-491.99	-42.67	0.00	591.09	0.572	0.000	159.71	0.00	0.00	0.00	0.00	0.00
111	SEABED	-498.04	-42.67	0.00	597.14	0.572	0.000	159.71	0.00	0.00	0.00	0.00	0.00
112	SEABED	-504.09	-42.67	0.00	603.19	0.572	0.000	159.71	0.00	0.00	0.00	0.00	0.00
113	SEABED	-510.14	-42.67	0.00	609.24	0.572	0.000	159.71	0.00	0.00	0.00	0.00	0.00
114	SEABED	-516.19	-42.67	0.00	615.29	0.572	0.000	159.71	0.00	0.00	0.00	0.00	0.00
115	SEABED	-522.24	-42.67	0.00	621.34	0.572	0.000	159.71	0.00	0.00	0.00	0.00	0.00
116	SEABED	-528.29	-42.67	0.00	627.39	0.572	0.000	159.71	0.00	0.00	0.00	0.00	0.00
117	SEABED	-534.34	-42.67	0.00	633.44	0.572	0.000	159.71	0.00	0.00	0.00	0.00	0.00
118	SEABED	-540.39	-42.67	0.00	639.49	0.572	0.000	159.71	0.00	0.00	0.00	0.00	0.00
119	SEABED	-546.44	-42.67	0.00	645.54	0.572	0.000	159.71	0.00	0.00	0.00	0.00	0.00
120	SEABED	-552.49	-42.67	0.00	651.59	0.572	0.000	159.71	0.00	0.00	0.00	0.00	0.00
121	SEABED	-558.54	-42.67	0.00	657.64	0.572	0.000	159.71	0.00	0.00	0.00	0.00	0.00
122	SEABED	-564.59	-42.67	0.00	663.69	0.572	0.000	159.71	0.00	0.00	0.00	0.00	0.00
123	SEABED	-570.64	-42.67	0.00	669.74	0.572	0.000	159.71	0.00	0.00	0.00	0.00	0.00
124	SEABED	-576.69	-42.67	0.00	675.79	0.572	0.000	159.71	0.00	0.00	0.00	0.00	0.00
125	SEABED	-582.74	-42.67	0.00	681.84	0.572	0.000	159.71	0.00	0.00	0.00	0.00	0.00
126	SEABED	-588.79	-42.67	0.00	687.89	0.572	0.000	159.71	0.00	0.00	0.00	0.00	0.00
127	SEABED	-594.84	-42.67	0.00	693.94	0.572	0.000	159.71	0.00	0.00	0.00	0.00	0.00
128	SEABED	-600.89	-42.67	0.00	699.99	0.572	0.000	159.71	0.00	0.00	0.00	0.00	0.00
129	SEABED	-606.94	-42.67	0.00	706.04	0.572	0.000	159.71	0.00	0.00	0.00	0.00	0.00
130	SEABED	-612.99	-42.67	0.00	712.09	0.572	0.000	159.71	0.00	0.00	0.00	0.00	0.00
131	SEABED	-619.03	-42.67	0.00	718.14	0.571	0.000	159.71	0.00	0.00	0.00	0.00	0.00
132	SEABED	-625.08	-42.67	0.00	724.19	0.568	0.000	159.71	0.00	0.00	0.00	0.00	0.00
133	SEABED	-631.13	-42.67	0.00	730.24	0.425	0.000	159.71	0.00	0.00	0.00	0.00	0.00
134	SEABED	-634.58	-42.67	-0.02	733.68	0.236	0.000	159.71	0.00	0.00	0.00	0.00	0.00
135	SEABED	-638.02	-42.67	-0.08	737.12	0.000	0.000	159.71	0.00	0.00	0.00	0.00	0.00

S T A T I C P I P E C O O R D I N A T E S, F O R C E S A N D S T R E S S E S

NODE NO.	PIPE SECTION	X COORD (M)	Y COORD (M)	VERT ANGLE (DEG)	PIPE LENGTH (M)	SUPPORT REACTION (KN)	SEPARA -TION (M)	AXIAL TENSION (KN)	BENDING MOMENT (KN-M)	TENSILE STRESS (MPA)	BENDING STRESS (MPA)	TOTAL STRESS (MPA)	PERCNT YIELD (PCT)
1	LAYBARGE	96.31	6.41	1.93	0.00	9.946	0.000	0.00	2.75	0.00	4.25	4.25	1.18
3	LAYBARGE	84.28	6.05	1.58	12.04	24.048	0.000	-0.73	-19.06	-0.07	-29.50	29.57	8.21
5	LAYBARGE	73.45	5.73	1.91	22.87	24.720	0.000	-1.39	-30.08	-0.13	-46.57	46.71	12.97
7	TENSIONR	60.11	5.24	2.28	36.23	30.917	0.000	177.52	-21.60	17.09	-33.44	50.53	14.04
9	LAYBARGE	51.10	4.87	2.21	45.24	0.000	0.000	176.80	24.06	17.02	37.25	54.28	15.08
10	LAYBARGE	46.45	4.70	2.02	49.89	15.602	0.000	176.48	4.08	16.99	6.31	23.31	6.47
12	LAYBARGE	35.36	4.31	2.24	60.99	21.452	0.000	175.63	-41.20	16.91	-63.78	80.69	22.41
14	LAYBARGE	23.34	3.62	5.01	73.04	52.125	0.000	173.53	-173.43	16.71	-268.50	285.21	79.22
16	LAYBARGE	19.27	3.21	6.56	77.13	0.000	0.000	173.17	-116.80	16.67	-180.82	197.49	54.86
17	LAYBARGE	8.90	1.76	9.49	87.60	47.432	0.000	170.05	-139.96	16.37	-216.68	233.05	64.74
19	LAYBARGE	4.92	1.05	10.55	91.64	0.000	0.000	169.07	-59.59	16.28	-92.26	108.54	30.15
20	LAYBARGE	3.10	0.71	10.76	93.49	0.000	0.088	168.44	-30.57	16.22	-47.33	63.55	17.65
24	STINGER	-7.56	-1.30	10.30	104.33	0.000	0.059	165.70	40.38	15.88	62.52	78.47	21.80
26	STINGER	-16.57	-2.87	9.53	113.48	6.994	0.000	164.17	15.13	15.64	23.43	39.23	10.90
29	STINGER	-26.22	-4.47	9.42	123.26	17.678	0.000	162.57	-21.53	15.40	-33.34	48.98	13.61
31	STINGER	-37.01	-6.26	9.21	134.20	0.624	0.000	160.78	18.53	15.13	28.69	44.16	12.27
33	STINGER	-40.00	-6.74	9.08	137.23	0.000	0.465	160.31	12.99	15.05	20.11	35.53	9.87
35	SAGBEND	-42.86	-7.19	9.02	140.13	0.000	0.000	159.86	0.00	14.98	0.00	15.39	4.27
36	SAGBEND	-46.11	-7.59	6.92	143.40	0.000	0.000	159.96	0.00	0.00	0.00	0.00	0.00
37	SAGBEND	-52.11	-8.32	6.92	149.45	0.000	0.000	159.96	0.00	0.00	0.00	0.00	0.00
38	SAGBEND	-58.12	-9.04	6.91	155.50	0.000	0.000	159.96	0.00	0.00	0.00	0.00	0.00
39	SAGBEND	-64.12	-9.77	6.90	161.55	0.000	0.000	159.96	0.00	0.00	0.00	0.00	0.00
40	SAGBEND	-70.13	-10.50	6.90	167.60	0.000	0.000	159.95	0.00	0.00	0.00	0.00	0.00
41	SAGBEND	-76.14	-11.22	6.89	173.65	0.000	0.000	159.95	0.00	0.00	0.00	0.00	0.00
42	SAGBEND	-82.14	-11.95	6.89	179.70	0.000	0.000	159.95	0.00	0.00	0.00	0.00	0.00
43	SAGBEND	-88.15	-12.68	6.88	185.75	0.000	0.000	159.95	0.00	0.00	0.00	0.00	0.00
44	SAGBEND	-94.16	-13.40	6.88	191.80	0.000	0.000	159.95	0.00	0.00	0.00	0.00	0.00
45	SAGBEND	-100.16	-14.12	6.87	197.85	0.000	0.000	159.95	0.00	0.00	0.00	0.00	0.00
46	SAGBEND	-106.17	-14.85	6.86	203.90	0.000	0.000	159.94	0.00	0.00	0.00	0.00	0.00
47	SAGBEND	-112.18	-15.57	6.86	209.95	0.000	0.000	159.94	0.00	0.00	0.00	0.00	0.00
48	SAGBEND	-118.18	-16.29	6.85	216.00	0.000	0.000	159.94	0.00	0.00	0.00	0.00	0.00
49	SAGBEND	-124.19	-17.01	6.85	222.05	0.000	0.000	159.94	0.00	0.00	0.00	0.00	0.00
50	SAGBEND	-130.20	-17.74	6.84	228.10	0.000	0.000	159.94	0.00	0.00	0.00	0.00	0.00
51	SAGBEND	-136.20	-18.46	6.84	234.15	0.000	0.000	159.93	0.00	0.00	0.00	0.00	0.00
52	SAGBEND	-142.21	-19.18	6.83	240.20	0.000	0.000	159.93	0.00	0.00	0.00	0.00	0.00
53	SAGBEND	-148.22	-19.89	6.83	246.25	0.000	0.000	159.93	0.00	0.00	0.00	0.00	0.00
54	SAGBEND	-154.22	-20.61	6.82	252.30	0.000	0.000	159.93	0.00	0.00	0.00	0.00	0.00
55	SAGBEND	-160.23	-21.33	6.81	258.35	0.000	0.000	159.93	0.00	0.00	0.00	0.00	0.00
56	SAGBEND	-166.24	-22.05	6.81	264.40	0.000	0.000	159.92	0.00	0.00	0.00	0.00	0.00
57	SAGBEND	-172.25	-22.77	6.80	270.45	0.000	0.000	159.92	0.00	0.00	0.00	0.00	0.00
58	SAGBEND	-178.25	-23.48	6.80	276.50	0.000	0.000	159.92	0.00	0.00	0.00	0.00	0.00
59	SAGBEND	-184.26	-24.20	6.79	282.54	0.000	0.000	159.92	0.00	0.00	0.00	0.00	0.00
60	SAGBEND	-190.27	-24.91	6.79	288.59	0.000	0.000	159.92	0.00	0.00	0.00	0.00	0.00

S T A T I C P I P E C O O R D I N A T E S, F O R C E S A N D S T R E S S E S

NODE NO.	PIPE SECTION	X COORD (M)	Y COORD (M)	VERT ANGLE (DEG)	PIPE LENGTH (M)	SUPPORT REACTION (KN)	SEPARA -TION (M)	AXIAL TENSION (KN)	BENDING MOMENT (KN-M)	TENSILE STRESS (MPA)	BENDING STRESS (MPA)	TOTAL STRESS (MPA)	PERCNT YIELD (PCT)
61	SAGBEND	-196.28	-25.63	6.78	294.64	0.000	0.000	159.92	0.00	0.00	0.00	0.00	0.00
62	SAGBEND	-202.28	-26.34	6.77	300.69	0.000	0.000	159.91	0.00	0.00	0.00	0.00	0.00
63	SAGBEND	-208.29	-27.06	6.77	306.74	0.000	0.000	159.91	0.00	0.00	0.00	0.00	0.00
64	SAGBEND	-214.30	-27.77	6.76	312.79	0.000	0.000	159.91	0.00	0.00	0.00	0.00	0.00
65	SAGBEND	-220.31	-28.48	6.76	318.84	0.000	0.000	159.91	0.00	0.00	0.00	0.00	0.00
66	SAGBEND	-226.31	-29.19	6.75	324.89	0.000	0.000	159.91	0.00	0.00	0.00	0.00	0.00
67	SAGBEND	-232.32	-29.90	6.75	330.94	0.000	0.000	159.90	0.00	0.00	0.00	0.00	0.00
68	SAGBEND	-238.33	-30.61	6.74	336.99	0.000	0.000	159.90	0.00	0.00	0.00	0.00	0.00
69	SAGBEND	-241.44	-30.98	6.74	340.13	0.000	0.000	159.90	0.00	0.00	0.00	0.00	0.00
70	SAGBEND	-245.89	-31.50	6.59	344.61	0.000	0.000	159.85	0.00	0.00	0.00	0.00	0.00
71	SAGBEND	-250.35	-32.01	6.44	349.09	0.000	0.000	159.80	0.00	0.00	0.00	0.00	0.00
72	SAGBEND	-256.36	-32.68	6.23	355.14	0.000	0.000	159.74	0.00	0.00	0.00	0.00	0.00
73	SAGBEND	-262.38	-33.32	6.03	361.19	0.000	0.000	159.68	0.00	0.00	0.00	0.00	0.00
74	SAGBEND	-268.40	-33.95	5.82	367.24	0.000	0.000	159.62	0.00	0.00	0.00	0.00	0.00
75	SAGBEND	-274.42	-34.55	5.62	373.29	0.000	0.000	159.56	0.00	0.00	0.00	0.00	0.00
76	SAGBEND	-280.44	-35.13	5.42	379.34	0.000	0.000	159.51	0.00	0.00	0.00	0.00	0.00
77	SAGBEND	-286.46	-35.69	5.21	385.39	0.000	0.000	159.46	0.00	0.00	0.00	0.00	0.00
78	SAGBEND	-292.49	-36.23	5.01	391.44	0.000	0.000	159.41	0.00	0.00	0.00	0.00	0.00
79	SAGBEND	-298.51	-36.75	4.80	397.49	0.000	0.000	159.36	0.00	0.00	0.00	0.00	0.00
80	SAGBEND	-304.54	-37.25	4.60	403.54	0.000	0.000	159.31	0.00	0.00	0.00	0.00	0.00
81	SAGBEND	-310.58	-37.72	4.39	409.59	0.000	0.000	159.26	0.00	0.00	0.00	0.00	0.00
82	SAGBEND	-316.61	-38.17	4.19	415.64	0.000	0.000	159.22	0.00	0.00	0.00	0.00	0.00
83	SAGBEND	-322.64	-38.60	3.98	421.69	0.000	0.000	159.18	0.00	0.00	0.00	0.00	0.00
84	SAGBEND	-328.68	-39.01	3.78	427.74	0.000	0.000	159.14	0.00	0.00	0.00	0.00	0.00
85	SAGBEND	-334.72	-39.40	3.57	433.79	0.000	0.000	159.11	0.00	0.00	0.00	0.00	0.00
86	SAGBEND	-340.75	-39.77	3.37	439.84	0.000	0.000	159.07	0.00	0.00	0.00	0.00	0.00
87	SAGBEND	-346.80	-40.11	3.16	445.89	0.000	0.000	159.04	0.00	0.00	0.00	0.00	0.00
88	SAGBEND	-352.84	-40.43	2.96	451.94	0.000	0.000	159.01	0.00	0.00	0.00	0.00	0.00
89	SAGBEND	-358.88	-40.73	2.75	457.99	0.000	0.000	158.98	0.00	0.00	0.00	0.00	0.00
90	SAGBEND	-364.92	-41.01	2.54	464.04	0.000	0.000	158.95	0.00	0.00	0.00	0.00	0.00
91	SAGBEND	-370.97	-41.27	2.34	470.09	0.000	0.000	158.93	0.00	0.00	0.00	0.00	0.00

92	SAGBEND	-377.01	-41.51	2.13	476.14	0.000	0.000	158.91	0.00	0.00	0.00	0.00	0.00
93	SAGBEND	-383.06	-41.72	1.93	482.19	0.000	0.000	158.89	0.00	0.00	0.00	0.00	0.00
94	SAGBEND	-389.10	-41.91	1.72	488.24	0.000	0.000	158.87	0.00	0.00	0.00	0.00	0.00
95	SAGBEND	-395.15	-42.08	1.51	494.29	0.000	0.000	158.85	0.00	0.00	0.00	0.00	0.00
96	SAGBEND	-401.20	-42.23	1.31	500.34	0.000	0.000	158.84	0.00	0.00	0.00	0.00	0.00
97	SAGBEND	-407.25	-42.36	1.10	506.39	0.000	0.000	158.83	0.00	0.00	0.00	0.00	0.00
98	SAGBEND	-413.30	-42.47	0.90	512.44	0.000	0.000	158.82	0.00	0.00	0.00	0.00	0.00
99	SAGBEND	-419.35	-42.55	0.69	518.49	0.000	0.000	158.81	0.00	0.00	0.00	0.00	0.00
100	SAGBEND	-425.40	-42.61	0.48	524.54	0.000	0.000	158.80	0.00	0.00	0.00	0.00	0.00
101	SAGBEND	-431.45	-42.65	0.28	530.59	0.000	0.000	158.80	0.00	0.00	0.00	0.00	0.00
102	SEABED	-437.50	-42.67	0.07	536.64	0.156	0.000	158.80	0.00	0.00	0.00	0.00	0.00
103	SEABED	-443.55	-42.67	0.01	542.69	0.511	0.000	158.80	0.00	0.00	0.00	0.00	0.00
104	SEABED	-449.60	-42.67	0.00	548.74	0.567	0.000	158.80	0.00	0.00	0.00	0.00	0.00

S T A T I C P I P E C O O R D I N A T E S, F O R C E S A N D S T R E S S E S

NODE NO.	PIPE SECTION	X COORD (M)	Y COORD (M)	VERT ANGLE (DEG)	PIPE LENGTH (M)	SUPPORT REACTION (KN)	SEPARA -TION (M)	AXIAL TENSION (KN)	BENDING MOMENT (KN-M)	TENSILE STRESS (MPA)	BENDING STRESS (MPA)	TOTAL STRESS (MPA)	PERCNT YIELD (PCT)
105	SEABED	-455.65	-42.67	0.00	554.79	0.571	0.000	158.80	0.00	0.00	0.00	0.00	0.00
106	SEABED	-461.70	-42.67	0.00	560.84	0.572	0.000	158.80	0.00	0.00	0.00	0.00	0.00
107	SEABED	-467.75	-42.67	0.00	566.89	0.572	0.000	158.80	0.00	0.00	0.00	0.00	0.00
108	SEABED	-473.80	-42.67	0.00	572.94	0.572	0.000	158.80	0.00	0.00	0.00	0.00	0.00
109	SEABED	-479.85	-42.67	0.00	578.99	0.572	0.000	158.80	0.00	0.00	0.00	0.00	0.00
110	SEABED	-485.90	-42.67	0.00	585.04	0.572	0.000	158.80	0.00	0.00	0.00	0.00	0.00
111	SEABED	-491.95	-42.67	0.00	591.09	0.572	0.000	158.80	0.00	0.00	0.00	0.00	0.00
112	SEABED	-497.99	-42.67	0.00	597.14	0.572	0.000	158.80	0.00	0.00	0.00	0.00	0.00
113	SEABED	-504.04	-42.67	0.00	603.19	0.572	0.000	158.80	0.00	0.00	0.00	0.00	0.00
114	SEABED	-510.09	-42.67	0.00	609.24	0.572	0.000	158.80	0.00	0.00	0.00	0.00	0.00
115	SEABED	-516.14	-42.67	0.00	615.29	0.572	0.000	158.80	0.00	0.00	0.00	0.00	0.00
116	SEABED	-522.19	-42.67	0.00	621.34	0.572	0.000	158.80	0.00	0.00	0.00	0.00	0.00
117	SEABED	-528.24	-42.67	0.00	627.39	0.572	0.000	158.80	0.00	0.00	0.00	0.00	0.00
118	SEABED	-534.29	-42.67	0.00	633.44	0.572	0.000	158.80	0.00	0.00	0.00	0.00	0.00
119	SEABED	-540.34	-42.67	0.00	639.49	0.572	0.000	158.80	0.00	0.00	0.00	0.00	0.00
120	SEABED	-546.39	-42.67	0.00	645.54	0.572	0.000	158.80	0.00	0.00	0.00	0.00	0.00
121	SEABED	-552.44	-42.67	0.00	651.59	0.572	0.000	158.80	0.00	0.00	0.00	0.00	0.00
122	SEABED	-558.49	-42.67	0.00	657.64	0.572	0.000	158.80	0.00	0.00	0.00	0.00	0.00
123	SEABED	-564.54	-42.67	0.00	663.69	0.572	0.000	158.80	0.00	0.00	0.00	0.00	0.00
124	SEABED	-570.59	-42.67	0.00	669.74	0.572	0.000	158.80	0.00	0.00	0.00	0.00	0.00
125	SEABED	-576.64	-42.67	0.00	675.79	0.572	0.000	158.80	0.00	0.00	0.00	0.00	0.00
126	SEABED	-582.69	-42.67	0.00	681.84	0.572	0.000	158.80	0.00	0.00	0.00	0.00	0.00
127	SEABED	-588.74	-42.67	0.00	687.89	0.572	0.000	158.80	0.00	0.00	0.00	0.00	0.00
128	SEABED	-594.79	-42.67	0.00	693.94	0.572	0.000	158.80	0.00	0.00	0.00	0.00	0.00
129	SEABED	-600.84	-42.67	0.00	699.99	0.572	0.000	158.80	0.00	0.00	0.00	0.00	0.00
130	SEABED	-606.89	-42.67	0.00	706.04	0.572	0.000	158.80	0.00	0.00	0.00	0.00	0.00
131	SEABED	-612.94	-42.67	0.00	712.09	0.572	0.000	158.80	0.00	0.00	0.00	0.00	0.00
132	SEABED	-618.99	-42.67	0.00	718.14	0.571	0.000	158.80	0.00	0.00	0.00	0.00	0.00
133	SEABED	-625.04	-42.67	0.00	724.19	0.570	0.000	158.80	0.00	0.00	0.00	0.00	0.00
134	SEABED	-631.09	-42.67	0.00	730.24	0.557	0.000	158.80	0.00	0.00	0.00	0.00	0.00
135	SEABED	-637.14	-42.67	-0.02	736.29	0.373	0.000	158.80	0.00	0.00	0.00	0.00	0.00
136	SEABED	-640.97	-42.67	-0.08	740.12	0.000	0.000	158.80	0.00	0.00	0.00	0.00	0.00

S T A T I C P I P E C O O R D I N A T E S, F O R C E S A N D S T R E S S E S

NODE NO.	PIPE SECTION	X COORD (M)	Y COORD (M)	VERT ANGLE (DEG)	PIPE LENGTH (M)	SUPPORT REACTION (KN)	SEPARA -TION (M)	AXIAL TENSION (KN)	BENDING MOMENT (KN-M)	TENSILE STRESS (MPA)	BENDING STRESS (MPA)	TOTAL STRESS (MPA)	PERCNT YIELD (PCT)
1	LAYBARGE	96.31	6.41	1.93	0.00	9.947	0.000	0.00	2.75	0.00	4.25	4.25	1.18
3	LAYBARGE	84.28	6.05	1.58	12.04	24.041	0.000	-0.73	-19.05	-0.07	-29.49	29.56	8.21
5	LAYBARGE	73.45	5.73	1.91	22.87	24.743	0.000	-1.39	-30.13	-0.13	-46.64	46.78	12.99
7	TENSIONR	60.11	5.24	2.28	36.23	30.892	0.000	210.14	-21.44	20.23	-33.19	53.43	14.84
9	LAYBARGE	51.10	4.87	2.21	45.24	0.000	0.000	209.42	23.68	20.17	36.66	56.82	15.78
10	LAYBARGE	46.45	4.70	2.03	49.89	15.520	0.000	209.10	4.05	20.13	6.27	26.41	7.34
12	LAYBARGE	35.36	4.31	2.23	60.99	21.394	0.000	208.25	-40.53	20.05	-62.75	82.80	23.00
14	LAYBARGE	23.34	3.62	5.06	73.04	57.005	0.000	206.08	-180.17	19.84	-278.93	298.77	82.99
16	LAYBARGE	19.27	3.20	6.64	77.13	0.000	0.000	205.79	-114.93	19.82	-177.92	197.74	54.93
17	LAYBARGE	8.90	1.76	9.28	87.60	44.982	0.000	202.79	-121.95	19.53	-188.80	208.33	57.87
19	LAYBARGE	4.92	1.07	10.17	91.64	0.000	0.000	201.77	-45.42	19.43	-70.31	89.74	24.93
20	LAYBARGE	3.09	0.74	10.32	93.49	0.000	0.122	201.14	-18.34	19.37	-28.39	47.76	13.27
24	STINGER	-7.58	-1.16	9.64	104.33	0.000	0.106	198.46	44.72	19.04	69.23	88.33	24.54
26	STINGER	-16.60	-2.62	8.78	113.47	5.507	0.000	197.04	19.34	18.82	29.93	48.90	13.58
29	STINGER	-26.27	-4.09	8.70	123.25	19.626	0.000	195.56	-27.67	18.60	-42.83	61.65	17.13
31	STINGER	-37.08	-5.75	8.56	134.19	0.000	0.026	193.91	18.53	18.35	28.69	47.35	13.15
33	STINGER	-40.08	-6.20	8.44	137.21	0.000	0.496	193.47	12.97	18.28	20.08	38.69	10.75
35	SAGBEND	-42.96	-6.62	8.38	140.13	0.000	0.000	193.05	0.00	18.21	0.00	18.58	5.16
36	SAGBEND	-46.20	-7.00	6.65	143.40	0.000	0.000	193.13	0.00	0.00	0.00	0.00	0.00
37	SAGBEND	-52.21	-7.70	6.65	149.45	0.000	0.000	193.13	0.00	0.00	0.00	0.00	0.00
38	SAGBEND	-58.22	-8.40	6.64	155.50	0.000	0.000	193.13	0.00	0.00	0.00	0.00	0.00
39	SAGBEND	-64.23	-9.10	6.64	161.55	0.000	0.000	193.13	0.00	0.00	0.00	0.00	0.00
40	SAGBEND	-70.24	-9.80	6.63	167.60	0.000	0.000	193.13	0.00	0.00	0.00	0.00	0.00
41	SAGBEND	-76.25	-10.50	6.63	173.65	0.000	0.000	193.12	0.00	0.00	0.00	0.00	0.00
42	SAGBEND	-82.26	-11.20	6.62	179.70	0.000	0.000	193.12	0.00	0.00	0.00	0.00	0.00
43	SAGBEND	-88.27	-11.89	6.62	185.75	0.000	0.000	193.12	0.00	0.00	0.00	0.00	0.00
44	SAGBEND	-94.28	-12.59	6.61	191.80	0.000	0.000	193.12	0.00	0.00	0.00	0.00	0.00
45	SAGBEND	-100.29	-13.29	6.61	197.85	0.000	0.000	193.12	0.00	0.00	0.00	0.00	0.00
46	SAGBEND	-106.30	-13.98	6.61	203.90	0.000	0.000	193.12	0.00	0.00	0.00	0.00	0.00
47	SAGBEND	-112.31	-14.68	6.60	209.95	0.000	0.000	193.11	0.00	0.00	0.00	0.00	0.00
48	SAGBEND	-118.32	-15.38	6.60	216.00	0.000	0.000	193.11	0.00	0.00	0.00	0.00	0.00
49	SAGBEND	-124.33	-16.07	6.59	222.05	0.000	0.000	193.11	0.00	0.00	0.00	0.00	0.00
50	SAGBEND	-130.34	-16.76	6.59	228.10	0.000	0.000	193.11	0.00	0.00	0.00	0.00	0.00
51	SAGBEND	-136.35	-17.46	6.58	234.15	0.000	0.000	193.11	0.00	0.00	0.00	0.00	0.00
52	SAGBEND	-142.36	-18.15	6.58	240.20	0.000	0.000	193.10	0.00	0.00	0.00	0.00	0.00
53	SAGBEND	-148.37	-18.84	6.57	246.25	0.000	0.000	193.10	0.00	0.00	0.00	0.00	0.00
54	SAGBEND	-154.38	-19.54	6.57	252.30	0.000	0.000	193.10	0.00	0.00	0.00	0.00	0.00
55	SAGBEND	-160.39	-20.23	6.56	258.35	0.000	0.000	193.10	0.00	0.00	0.00	0.00	0.00
56	SAGBEND	-166.40	-20.92	6.56	264.40	0.000	0.000	193.10	0.00	0.00	0.00	0.00	0.00
57	SAGBEND	-172.41	-21.61	6.55	270.45	0.000	0.000	193.10	0.00	0.00	0.00	0.00	0.00
58	SAGBEND	-178.42	-22.30	6.55	276.50	0.000	0.000	193.09	0.00	0.00	0.00	0.00	0.00
59	SAGBEND	-184.43	-22.99	6.54	282.55	0.000	0.000	193.09	0.00	0.00	0.00	0.00	0.00
60	SAGBEND	-190.44	-23.68	6.54	288.60	0.000	0.000	193.09	0.00	0.00	0.00	0.00	0.00

S T A T I C P I P E C O O R D I N A T E S, F O R C E S A N D S T R E S S E S

NODE NO.	PIPE SECTION	X COORD (M)	Y COORD (M)	VERT ANGLE (DEG)	PIPE LENGTH (M)	SUPPORT REACTION (KN)	SEPARA -TION (M)	AXIAL TENSION (KN)	BENDING MOMENT (KN-M)	TENSILE STRESS (MPA)	BENDING STRESS (MPA)	TOTAL STRESS (MPA)	PERCNT YIELD (PCT)
61	SAGBEND	-196.45	-24.37	6.54	294.65	0.000	0.000	193.09	0.00	0.00	0.00	0.00	0.00
62	SAGBEND	-202.46	-25.06	6.53	300.70	0.000	0.000	193.09	0.00	0.00	0.00	0.00	0.00
63	SAGBEND	-208.47	-25.74	6.53	306.75	0.000	0.000	193.08	0.00	0.00	0.00	0.00	0.00
64	SAGBEND	-214.48	-26.43	6.52	312.80	0.000	0.000	193.08	0.00	0.00	0.00	0.00	0.00
65	SAGBEND	-220.50	-27.12	6.52	318.85	0.000	0.000	193.08	0.00	0.00	0.00	0.00	0.00
66	SAGBEND	-226.51	-27.81	6.51	324.90	0.000	0.000	193.08	0.00	0.00	0.00	0.00	0.00
67	SAGBEND	-232.52	-28.49	6.51	330.94	0.000	0.000	193.08	0.00	0.00	0.00	0.00	0.00
68	SAGBEND	-238.53	-29.18	6.50	336.99	0.000	0.000	193.08	0.00	0.00	0.00	0.00	0.00
69	SAGBEND	-241.64	-29.53	6.50	340.13	0.000	0.000	193.07	0.00	0.00	0.00	0.00	0.00
70	SAGBEND	-246.10	-30.03	6.38	344.61	0.000	0.000	193.03	0.00	0.00	0.00	0.00	0.00
71	SAGBEND	-250.55	-30.53	6.25	349.09	0.000	0.000	192.98	0.00	0.00	0.00	0.00	0.00
72	SAGBEND	-256.57	-31.18	6.08	355.14	0.000	0.000	192.92	0.00	0.00	0.00	0.00	0.00
73	SAGBEND	-262.58	-31.81	5.91	361.19	0.000	0.000	192.86	0.00	0.00	0.00	0.00	0.00
74	SAGBEND	-268.60	-32.42	5.74	367.24	0.000	0.000	192.80	0.00	0.00	0.00	0.00	0.00
75	SAGBEND	-274.62	-33.02	5.57	373.29	0.000	0.000	192.75	0.00	0.00	0.00	0.00	0.00
76	SAGBEND	-280.65	-33.60	5.41	379.34	0.000	0.000	192.69	0.00	0.00	0.00	0.00	0.00
77	SAGBEND	-286.67	-34.16	5.24	385.39	0.000	0.000	192.64	0.00	0.00	0.00	0.00	0.00
78	SAGBEND	-292.69	-34.70	5.07	391.44	0.000	0.000	192.59	0.00	0.00	0.00	0.00	0.00
79	SAGBEND	-298.72	-35.23	4.90	397.49	0.000	0.000	192.54	0.00	0.00	0.00	0.00	0.00
80	SAGBEND	-304.75	-35.74	4.73	403.54	0.000	0.000	192.49	0.00	0.00	0.00	0.00	0.00
81	SAGBEND	-310.78	-36.23	4.56	409.59	0.000	0.000	192.44	0.00	0.00	0.00	0.00	0.00
82	SAGBEND	-316.81	-36.70	4.39	415.64	0.000	0.000	192.40	0.00	0.00	0.00	0.00	0.00
83	SAGBEND	-322.84	-37.15	4.22	421.69	0.000	0.000	192.36	0.00	0.00	0.00	0.00	0.00
84	SAGBEND	-328.88	-37.59	4.05	427.74	0.000	0.000	192.31	0.00	0.00	0.00	0.00	0.00
85	SAGBEND	-334.91	-38.01	3.88	433.79	0.000	0.000	192.27	0.00	0.00	0.00	0.00	0.00
86	SAGBEND	-340.95	-38.41	3.71	439.84	0.000	0.000	192.24	0.00	0.00	0.00	0.00	0.00
87	SAGBEND	-346.99	-38.79	3.54	445.89	0.000	0.000	192.20	0.00	0.00	0.00	0.00	0.00
88	SAGBEND	-353.03	-39.15	3.37	451.94	0.000	0.000	192.17	0.00	0.00	0.00	0.00	0.00
89	SAGBEND	-359.07	-39.50	3.20	457.99	0.000	0.000	192.13	0.00	0.00	0.00	0.00	0.00
90	SAGBEND	-365.11	-39.83	3.03	464.04	0.000	0.000	192.10	0.00	0.00	0.00	0.00	0.00
91	SAGBEND	-371.15	-40.14	2.86	470.09	0.000	0.000	192.07	0.00	0.00	0.00	0.00	0.00
92	SAGBEND	-377.19	-40.43	2.69	476.14	0.000	0.000	192.05	0.00	0.00	0.00	0.00	0.00
93	SAGBEND	-383.24	-40.71	2.52	482.19	0.000	0.000	192.02	0.00	0.00	0.00	0.00	0.00
94	SAGBEND	-389.28	-40.96	2.35	488.24	0.000	0.000	191.99	0.00	0.00	0.00	0.00	0.00
95	SAGBEND	-395.33	-41.20	2.18	494.29	0.000	0.000	191.97	0.00	0.00	0.00	0.00	0.00
96	SAGBEND	-401.37	-41.42	2.01	500.34	0.000	0.000	191.95	0.00	0.00	0.00	0.00	0.00
97	SAGBEND	-407.42	-41.63	1.84	506.39	0.000	0.000	191.93	0.00	0.00	0.00	0.00	0.00
98	SAGBEND	-413.47	-41.81	1.67	512.44	0.000	0.000	191.91	0.00	0.00	0.00	0.00	0.00
99	SAGBEND	-419.51	-41.98	1.50	518.49	0.000	0.000	191.90	0.00	0.00	0.00	0.00	0.00

100	SAGBEND	-425.56	-42.13	1.33	524.54	0.000	0.000	191.89	0.00	0.00	0.00	0.00	0.00
101	SAGBEND	-431.61	-42.26	1.16	530.59	0.000	0.000	191.87	0.00	0.00	0.00	0.00	0.00
102	SAGBEND	-437.66	-42.37	0.98	536.64	0.000	0.000	191.86	0.00	0.00	0.00	0.00	0.00
103	SAGBEND	-443.71	-42.47	0.81	542.69	0.000	0.000	191.85	0.00	0.00	0.00	0.00	0.00
104	SAGBEND	-449.76	-42.54	0.64	548.74	0.000	0.000	191.85	0.00	0.00	0.00	0.00	0.00
105	SAGBEND	-455.81	-42.60	0.47	554.79	0.000	0.000	191.84	0.00	0.00	0.00	0.00	0.00

S T A T I C P I P E C O O R D I N A T E S, F O R C E S A N D S T R E S S E S

NODE NO.	PIPE SECTION	X COORD (M)	Y COORD (M)	VERT ANGLE (DEG)	PIPE LENGTH (M)	SUPPORT REACTION (KN)	SEPARA -TION (M)	AXIAL TENSION (KN)	BENDING MOMENT (KN-M)	TENSILE STRESS (MPA)	BENDING STRESS (MPA)	TOTAL STRESS (MPA)	PERCNT YIELD (PCT)
106	SAGBEND	-461.86	-42.64	0.30	560.84	0.000	0.000	191.84	0.00	0.00	0.00	0.00	0.00
107	SAGBEND	-467.91	-42.67	0.13	566.89	0.035	0.000	191.83	0.00	0.00	0.00	0.00	0.00
108	SEABED	-473.96	-42.67	0.02	572.94	0.402	0.000	191.83	0.00	0.00	0.00	0.00	0.00
109	SEABED	-480.01	-42.67	0.00	578.99	0.554	0.000	191.83	0.00	0.00	0.00	0.00	0.00
110	SEABED	-486.06	-42.67	0.00	585.04	0.570	0.000	191.83	0.00	0.00	0.00	0.00	0.00
111	SEABED	-492.11	-42.67	0.00	591.09	0.571	0.000	191.83	0.00	0.00	0.00	0.00	0.00
112	SEABED	-498.16	-42.67	0.00	597.14	0.571	0.000	191.83	0.00	0.00	0.00	0.00	0.00
113	SEABED	-504.21	-42.67	0.00	603.19	0.571	0.000	191.83	0.00	0.00	0.00	0.00	0.00
114	SEABED	-510.26	-42.67	0.00	609.24	0.571	0.000	191.83	0.00	0.00	0.00	0.00	0.00
115	SEABED	-516.31	-42.67	0.00	615.29	0.571	0.000	191.83	0.00	0.00	0.00	0.00	0.00
116	SEABED	-522.36	-42.67	0.00	621.34	0.571	0.000	191.83	0.00	0.00	0.00	0.00	0.00
117	SEABED	-528.41	-42.67	0.00	627.39	0.571	0.000	191.83	0.00	0.00	0.00	0.00	0.00
118	SEABED	-534.46	-42.67	0.00	633.44	0.571	0.000	191.83	0.00	0.00	0.00	0.00	0.00
119	SEABED	-540.51	-42.67	0.00	639.49	0.571	0.000	191.83	0.00	0.00	0.00	0.00	0.00
120	SEABED	-546.56	-42.67	0.00	645.54	0.571	0.000	191.83	0.00	0.00	0.00	0.00	0.00
121	SEABED	-552.61	-42.67	0.00	651.59	0.571	0.000	191.83	0.00	0.00	0.00	0.00	0.00
122	SEABED	-558.66	-42.67	0.00	657.64	0.571	0.000	191.83	0.00	0.00	0.00	0.00	0.00
123	SEABED	-564.71	-42.67	0.00	663.69	0.571	0.000	191.83	0.00	0.00	0.00	0.00	0.00
124	SEABED	-570.76	-42.67	0.00	669.74	0.571	0.000	191.83	0.00	0.00	0.00	0.00	0.00
125	SEABED	-576.81	-42.67	0.00	675.79	0.571	0.000	191.83	0.00	0.00	0.00	0.00	0.00
126	SEABED	-582.86	-42.67	0.00	681.84	0.571	0.000	191.83	0.00	0.00	0.00	0.00	0.00
127	SEABED	-588.91	-42.67	0.00	687.89	0.571	0.000	191.83	0.00	0.00	0.00	0.00	0.00
128	SEABED	-594.96	-42.67	0.00	693.94	0.571	0.000	191.83	0.00	0.00	0.00	0.00	0.00
129	SEABED	-601.00	-42.67	0.00	699.99	0.571	0.000	191.83	0.00	0.00	0.00	0.00	0.00
130	SEABED	-607.05	-42.67	0.00	706.04	0.571	0.000	191.83	0.00	0.00	0.00	0.00	0.00
131	SEABED	-613.10	-42.67	0.00	712.09	0.571	0.000	191.83	0.00	0.00	0.00	0.00	0.00
132	SEABED	-619.15	-42.67	0.00	718.14	0.571	0.000	191.83	0.00	0.00	0.00	0.00	0.00
133	SEABED	-625.20	-42.67	0.00	724.19	0.569	0.000	191.83	0.00	0.00	0.00	0.00	0.00
134	SEABED	-631.25	-42.67	0.00	730.24	0.552	0.000	191.83	0.00	0.00	0.00	0.00	0.00
135	SEABED	-637.30	-42.67	-0.02	736.29	0.360	0.000	191.83	0.00	0.00	0.00	0.00	0.00
136	SEABED	-641.14	-42.67	-0.07	740.12	0.000	0.000	191.83	0.00	0.00	0.00	0.00	0.00

S T A T I C P I P E C O O R D I N A T E S, F O R C E S A N D S T R E S S E S

NODE NO.	PIPE SECTION	X COORD (M)	Y COORD (M)	VERT ANGLE (DEG)	PIPE LENGTH (M)	SUPPORT REACTION (KN)	SEPARA -TION (M)	AXIAL TENSION (KN)	BENDING MOMENT (KN-M)	TENSILE STRESS (MPA)	BENDING STRESS (MPA)	TOTAL STRESS (MPA)	PERCNT YIELD (PCT)
1	LAYBARGE	96.31	6.41	1.93	0.00	9.946	0.000	0.00	2.75	0.00	4.25	4.25	1.18
3	LAYBARGE	84.28	6.05	1.58	12.04	24.049	0.000	-0.73	-19.06	-0.07	-29.50	29.57	8.21
5	LAYBARGE	73.45	5.73	1.90	22.87	24.719	0.000	-1.39	-30.08	-0.13	-46.57	46.70	12.97
7	TENSIONR	60.11	5.24	2.28	36.23	30.973	0.000	210.12	-21.56	20.23	-33.38	53.62	14.89
9	LAYBARGE	51.10	4.87	2.21	45.24	0.000	0.000	209.40	24.07	20.16	37.26	57.43	15.95
10	LAYBARGE	46.45	4.70	2.02	49.89	15.074	0.000	209.08	4.71	20.13	7.28	27.42	7.62
12	LAYBARGE	35.36	4.31	2.26	60.99	23.159	0.000	208.22	-42.61	20.05	-65.97	86.02	23.89
14	LAYBARGE	23.34	3.62	4.95	73.04	51.170	0.000	206.17	-168.44	19.85	-260.77	280.62	77.95
16	LAYBARGE	19.27	3.21	6.47	77.13	0.000	0.000	205.78	-117.52	19.81	-181.94	201.76	56.04
17	LAYBARGE	8.90	1.76	9.78	87.60	55.035	0.000	202.40	-170.55	19.49	-264.04	283.53	78.76
19	LAYBARGE	4.93	1.02	11.14	91.64	0.000	0.000	201.53	-84.71	19.40	-131.15	150.55	41.82
20	LAYBARGE	3.11	0.66	11.46	93.49	0.000	0.036	200.90	-54.08	19.34	-83.73	103.07	28.63
24	STINGER	-7.57	-1.56	11.63	104.40	3.669	0.000	198.08	15.50	18.98	23.99	43.06	11.96
26	STINGER	-16.54	-3.36	11.17	113.54	5.823	0.000	196.28	12.79	18.71	19.80	38.69	10.75
29	STINGER	-26.13	-5.23	10.97	123.32	16.787	0.000	194.41	-11.14	18.42	-17.24	35.95	9.99
31	STINGER	-36.87	-7.28	10.30	134.25	0.915	0.000	192.33	43.81	18.11	67.83	86.33	23.98
33	STINGER	-39.80	-7.80	9.95	137.23	0.000	0.484	191.80	47.58	18.03	73.66	92.11	25.59
35	SAGBEND	-45.88	-8.83	9.24	143.40	0.000	0.000	190.79	38.92	17.87	60.25	78.60	21.83
36	SAGBEND	-49.21	-9.36	8.96	146.76	0.000	0.000	190.28	23.93	17.79	37.04	55.35	15.37
37	SAGBEND	-52.53	-9.88	8.85	150.13	0.000	0.000	189.78	0.00	17.71	0.00	18.27	5.08
38	SAGBEND	-57.87	-10.46	6.24	155.50	0.000	0.000	189.97	0.00	0.00	0.00	0.00	0.00
39	SAGBEND	-63.88	-11.12	6.23	161.55	0.000	0.000	189.97	0.00	0.00	0.00	0.00	0.00
40	SAGBEND	-69.90	-11.77	6.23	167.60	0.000	0.000	189.97	0.00	0.00	0.00	0.00	0.00
41	SAGBEND	-75.91	-12.43	6.22	173.65	0.000	0.000	189.97	0.00	0.00	0.00	0.00	0.00
42	SAGBEND	-81.93	-13.09	6.22	179.70	0.000	0.000	189.96	0.00	0.00	0.00	0.00	0.00
43	SAGBEND	-87.94	-13.74	6.21	185.75	0.000	0.000	189.96	0.00	0.00	0.00	0.00	0.00
44	SAGBEND	-93.96	-14.40	6.21	191.80	0.000	0.000	189.96	0.00	0.00	0.00	0.00	0.00
45	SAGBEND	-99.97	-15.05	6.20	197.85	0.000	0.000	189.96	0.00	0.00	0.00	0.00	0.00
46	SAGBEND	-105.98	-15.70	6.20	203.90	0.000	0.000	189.96	0.00	0.00	0.00	0.00	0.00
47	SAGBEND	-112.00	-16.36	6.19	209.95	0.000	0.000	189.96	0.00	0.00	0.00	0.00	0.00
48	SAGBEND	-118.01	-17.01	6.19	216.00	0.000	0.000	189.95	0.00	0.00	0.00	0.00	0.00
49	SAGBEND	-124.03	-17.66	6.18	222.05	0.000	0.000	189.95	0.00	0.00	0.00	0.00	0.00
50	SAGBEND	-130.04	-18.31	6.18	228.10	0.000	0.000	189.95	0.00	0.00	0.00	0.00	0.00
51	SAGBEND	-136.06	-18.96	6.17	234.15	0.000	0.000	189.95	0.00	0.00	0.00	0.00	0.00
52	SAGBEND	-142.07	-19.61	6.17	240.20	0.000	0.000	189.95	0.00	0.00	0.00	0.00	0.00
53	SAGBEND	-148.09	-20.26	6.17	246.25	0.000	0.000	189.95	0.00	0.00	0.00	0.00	0.00
54	SAGBEND	-154.10	-20.91	6.16	252.30	0.000	0.000	189.94	0.00	0.00	0.00	0.00	0.00
55	SAGBEND	-160.12	-21.56	6.16	258.35	0.000	0.000	189.94	0.00	0.00	0.00	0.00	0.00
56	SAGBEND	-166.13	-22.21	6.15	264.40	0.000	0.000	189.94	0.00	0.00	0.00	0.00	0.00
57	SAGBEND	-172.15	-22.86	6.15	270.45	0.000	0.000	189.94	0.00	0.00	0.00	0.00	0.00
58	SAGBEND	-178.16	-23.51	6.14	276.50	0.000	0.000	189.94	0.00	0.00	0.00	0.00	0.00
59	SAGBEND	-184.18	-24.15	6.14	282.55	0.000	0.000	189.94	0.00	0.00	0.00	0.00	0.00
60	SAGBEND	-190.19	-24.80	6.13	288.60	0.000	0.000	189.93	0.00	0.00	0.00	0.00	0.00

S T A T I C P I P E C O O R D I N A T E S, F O R C E S A N D S T R E S S E S

NODE NO.	PIPE SECTION	X COORD (M)	Y COORD (M)	VERT ANGLE (DEG)	PIPE LENGTH (M)	SUPPORT REACTION (KN)	SEPARA -TION (M)	AXIAL TENSION (KN)	BENDING MOMENT (KN-M)	TENSILE STRESS (MPA)	BENDING STRESS (MPA)	TOTAL STRESS (MPA)	PERCNT YIELD (PCT)
61	SAGBEND	-196.21	-25.45	6.13	294.65	0.000	0.000	189.93	0.00	0.00	0.00	0.00	0.00
62	SAGBEND	-202.22	-26.09	6.12	300.70	0.000	0.000	189.93	0.00	0.00	0.00	0.00	0.00
63	SAGBEND	-208.24	-26.74	6.12	306.74	0.000	0.000	189.93	0.00	0.00	0.00	0.00	0.00
64	SAGBEND	-214.26	-27.38	6.11	312.79	0.000	0.000	189.93	0.00	0.00	0.00	0.00	0.00
65	SAGBEND	-220.27	-28.02	6.11	318.84	0.000	0.000	189.93	0.00	0.00	0.00	0.00	0.00
66	SAGBEND	-226.29	-28.67	6.10	324.89	0.000	0.000	189.92	0.00	0.00	0.00	0.00	0.00
67	SAGBEND	-232.30	-29.31	6.10	330.94	0.000	0.000	189.92	0.00	0.00	0.00	0.00	0.00
68	SAGBEND	-238.32	-29.95	6.09	336.99	0.000	0.000	189.92	0.00	0.00	0.00	0.00	0.00
69	SAGBEND	-244.33	-30.60	6.09	343.04	0.000	0.000	189.92	0.00	0.00	0.00	0.00	0.00
70	SAGBEND	-247.85	-30.97	6.09	346.59	0.000	0.000	189.92	0.00	0.00	0.00	0.00	0.00
71	SAGBEND	-251.37	-31.35	6.08	350.13	0.000	0.000	189.92	0.00	0.00	0.00	0.00	0.00
72	SAGBEND	-256.37	-31.87	5.94	355.14	0.000	0.000	189.87	0.00	0.00	0.00	0.00	0.00
73	SAGBEND	-262.38	-32.49	5.77	361.19	0.000	0.000	189.81	0.00	0.00	0.00	0.00	0.00
74	SAGBEND	-268.40	-33.09	5.60	367.24	0.000	0.000	189.75	0.00	0.00	0.00	0.00	0.00
75	SAGBEND	-274.43	-33.67	5.43	373.29	0.000	0.000	189.70	0.00	0.00	0.00	0.00	0.00
76	SAGBEND	-280.45	-34.23	5.25	379.34	0.000	0.000	189.64	0.00	0.00	0.00	0.00	0.00
77	SAGBEND	-286.48	-34.78	5.08	385.39	0.000	0.000	189.59	0.00	0.00	0.00	0.00	0.00
78	SAGBEND	-292.50	-35.30	4.91	391.44	0.000	0.000	189.54	0.00	0.00	0.00	0.00	0.00
79	SAGBEND	-298.53	-35.81	4.74	397.49	0.000	0.000	189.49	0.00	0.00	0.00	0.00	0.00
80	SAGBEND	-304.56	-36.30	4.57	403.54	0.000	0.000	189.45	0.00	0.00	0.00	0.00	0.00
81	SAGBEND	-310.59	-36.78	4.39	409.59	0.000	0.000	189.40	0.00	0.00	0.00	0.00	0.00
82	SAGBEND	-316.62	-37.23	4.22	415.64	0.000	0.000	189.36	0.00	0.00	0.00	0.00	0.00
83	SAGBEND	-322.66	-37.67	4.05	421.69	0.000	0.000	189.32	0.00	0.00	0.00	0.00	0.00
84	SAGBEND	-328.69	-38.09	3.88	427.74	0.000	0.000	189.28	0.00	0.00	0.00	0.00	0.00
85	SAGBEND	-334.73	-38.49	3.70	433.79	0.000	0.000	189.24	0.00	0.00	0.00	0.00	0.00
86	SAGBEND	-340.77	-38.87	3.53	439.84	0.000	0.000	189.21	0.00	0.00	0.00	0.00	0.00
87	SAGBEND	-346.81	-39.23	3.36	445.89	0.000	0.000	189.17	0.00	0.00	0.00	0.00	0.00
88	SAGBEND	-352.85	-39.58	3.19	451.94	0.000	0.000	189.14	0.00	0.00	0.00	0.00	0.00
89	SAGBEND	-358.89	-39.90	3.01	457.99	0.000	0.000	189.11	0.00	0.00	0.00	0.00	0.00
90	SAGBEND	-364.93	-40.21	2.84	464.04	0.000	0.000	189.08	0.00	0.00	0.00	0.00	0.00
91	SAGBEND	-370.97	-40.50	2.67	470.09	0.000	0.000	189.05	0.00	0.00	0.00	0.00	0.00
92	SAGBEND	-377.02	-40.78	2.49	476.14	0.000	0.000	189.03	0.00	0.00	0.00	0.00	0.00
93	SAGBEND	-383.06	-41.03	2.32	482.19	0.000	0.000	189.00	0.00	0.00	0.00	0.00	0.00
94	SAGBEND	-389.11	-41.27	2.15	488.24	0.000	0.000	188.98	0.00	0.00	0.00	0.00	0.00
95	SAGBEND	-395.15	-41.48	1.97	494.29	0.000	0.000	188.96	0.00	0.00	0.00	0.00	0.00
96	SAGBEND	-401.20	-41.68	1.80	500.34	0.000	0.000	188.94	0.00	0.00	0.00	0.00	0.00
97	SAGBEND	-407.25	-41.86	1.63	506.39	0.000	0.000	188.92	0.00	0.00	0.00	0.00	0.00
98	SAGBEND	-413.29	-42.03	1.46	512.44	0.000	0.000	188.91	0.00	0.00	0.00	0.00	0.00
99	SAGBEND	-419.34	-42.17	1.28	518.49	0.000	0.000	188.89	0.00	0.00	0.00	0.00	0.00
100	SAGBEND	-425.39	-42.30	1.11	524.54	0.000	0.000	188.88	0.00	0.00	0.00	0.00	0.00
101	SAGBEND	-431.44	-42.41	0.94	530.59	0.000	0.000	188.87	0.00	0.00	0.00	0.00	0.00
102	SAGBEND	-437.49	-42.49	0.76	536.64	0.000	0.000	188.86	0.00	0.00	0.00	0.00	0.00
103	SAGBEND	-443.54	-42.57	0.59	542.69	0.000	0.000	188.86	0.00	0.00	0.00	0.00	0.00
104	SAGBEND	-449.59	-42.62	0.42	548.74	0.000	0.000	188.85	0.00	0.00	0.00	0.00	0.00
105	SAGBEND	-455.64	-42.65	0.24	554.79	0.000	0.000	188.85	0.00	0.00	0.00	0.00	0.00

S T A T I C P I P E C O O R D I N A T E S, F O R C E S A N D S T R E S S E S

NODE NO.	PIPE SECTION	X COORD (M)	Y COORD (M)	VERT ANGLE (DEG)	PIPE LENGTH (M)	SUPPORT REACTION (KN)	SEPARA -TION (M)	AXIAL TENSION (KN)	BENDING MOMENT (KN-M)	TENSILE STRESS (MPA)	BENDING STRESS (MPA)	TOTAL STRESS (MPA)	PERCNT YIELD (PCT)
106	SEABED	-461.69	-42.67	0.07	560.84	0.141	0.000	188.85	0.00	0.00	0.00	0.00	0.00
107	SEABED	-467.74	-42.67	0.01	566.89	0.498	0.000	188.85	0.00	0.00	0.00	0.00	0.00
108	SEABED	-473.79	-42.67	0.00	572.94	0.564	0.000	188.85	0.00	0.00	0.00	0.00	0.00
109	SEABED	-479.84	-42.67	0.00	578.99	0.571	0.000	188.85	0.00	0.00	0.00	0.00	0.00
110	SEABED	-485.89	-42.67	0.00	585.04	0.571	0.000	188.85	0.00	0.00	0.00	0.00	0.00
111	SEABED	-491.94	-42.67	0.00	591.09	0.571	0.000	188.85	0.00	0.00	0.00	0.00	0.00
112	SEABED	-497.99	-42.67	0.00	597.14	0.571	0.000	188.85	0.00	0.00	0.00	0.00	0.00
113	SEABED	-504.04	-42.67	0.00	603.19	0.571	0.000	188.85	0.00	0.00	0.00	0.00	0.00
114	SEABED	-510.09	-42.67	0.00	609.24	0.571	0.000	188.85	0.00	0.00	0.00	0.00	0.00
115	SEABED	-516.14	-42.67	0.00	615.29	0.571	0.000	188.85	0.00	0.00	0.00	0.00	0.00
116	SEABED	-522.19	-42.67	0.00	621.34	0.571	0.000	188.85	0.00	0.00	0.00	0.00	0.00
117	SEABED	-528.24	-42.67	0.00	627.39	0.571	0.000	188.85	0.00	0.00	0.00	0.00	0.00
118	SEABED	-534.29	-42.67	0.00	633.44	0.571	0.000	188.85	0.00	0.00	0.00	0.00	0.00
119	SEABED	-540.34	-42.67	0.00	639.49	0.571	0.000	188.85	0.00	0.00	0.00	0.00	0.00
120	SEABED	-546.39	-42.67	0.00	645.54	0.571	0.000	188.85	0.00	0.00	0.00	0.00	0.00
121	SEABED	-552.44	-42.67	0.00	651.59	0.571	0.000	188.85	0.00	0.00	0.00	0.00	0.00
122	SEABED	-558.49	-42.67	0.00	657.64	0.571	0.000	188.85	0.00	0.00	0.00	0.00	0.00
123	SEABED	-564.54	-42.67	0.00	663.69	0.571	0.000	188.85	0.00	0.00	0.00	0.00	0.00
124	SEABED	-570.58	-42.67	0.00	669.74	0.571	0.000	188.85	0.00	0.00	0.00	0.00	0.00
125	SEABED	-576.63	-42.67	0.00	675.79	0.571	0.000	188.85	0.00	0.00	0.00	0.00	0.00
126	SEABED	-582.68	-42.67	0.00	681.84	0.571	0.000	188.85	0.00	0.00	0.00	0.00	0.00
127	SEABED	-588.73	-42.67	0.00	687.89	0.571	0.000	188.85	0.00	0.00	0.00	0.00	0.00
128	SEABED	-594.78	-42.67	0.00	693.94	0.571	0.000	188.85	0.00	0.00	0.00	0.00	0.00
129	SEABED	-600.83	-42.67	0.00	699.99	0.571	0.000	188.85	0.00	0.00	0.00	0.00	0.00
130	SEABED	-606.88	-42.67	0.00	706.04	0.571	0.000	188.85	0.00	0.00	0.00	0.00	0.00
131	SEABED	-612.93	-42.67	0.00	712.09	0.571	0.000	188.85	0.00	0.00	0.00	0.00	0.00
132	SEABED	-618.98	-42.67	0.00	718.14	0.571	0.000	188.85	0.00	0.00	0.00	0.00	0.00
133	SEABED	-625.03	-42.67	0.00	724.19	0.571	0.000	188.85	0.00	0.00	0.00	0.00	0.00
134	SEABED	-631.08	-42.67	0.00	730.24	0.571	0.000	188.85	0.00	0.00	0.00	0.00	0.00
135	SEABED	-637.13	-42.67	0.00	736.29	0.567	0.000	188.85	0.00	0.00	0.00	0.00	0.00
136	SEABED	-643.18	-42.67	0.00	742.34	0.446	0.000	188.85	0.00	0.00	0.00	0.00	0.00
137	SEABED	-647.07	-42.67	-0.02	746.23	0.271	0.000	188.85	0.00	0.00	0.00	0.00	0.00
138	SEABED	-650.96	-42.67	-0.07	750.12	0.000	0.000	188.85	0.00	0.00	0.00	0.00	0.00

S T A T I C P I P E C O O R D I N A T E S, F O R C E S A N D S T R E S S E S

NODE NO.	PIPE SECTION	X COORD (M)	Y COORD (M)	VERT ANGLE (DEG)	PIPE LENGTH (M)	SUPPORT REACTION (KN)	SEPARA -TION (M)	AXIAL TENSION (KN)	BENDING MOMENT (KN-M)	TENSILE STRESS (MPA)	BENDING STRESS (MPA)	TOTAL STRESS (MPA)	PERCNT YIELD (PCT)
1	LAYBARGE	96.31	6.41	1.93	0.00	9.952	0.000	0.00	2.75	0.00	4.26	4.26	1.18
3	LAYBARGE	84.28	6.05	1.58	12.04	24.009	0.000	-0.73	-19.00	-0.07	-29.41	29.48	8.19
5	LAYBARGE	73.45	5.73	1.91	22.87	24.850	0.000	-1.40	-30.34	-0.13	-46.97	47.10	13.08
7	TENSIONR	60.11	5.24	2.27	36.23	30.722	0.000	331.62	-20.74	31.93	-32.11	64.04	17.79
9	LAYBARGE	51.10	4.87	2.21	45.24	0.000	0.000	330.91	21.86	31.86	33.84	65.71	18.25
10	LAYBARGE	46.45	4.70	2.05	49.89	15.815	0.000	330.58	3.10	31.83	4.80	36.63	10.18
12	LAYBARGE	35.36	4.31	2.16	60.99	18.579	0.000	329.75	-35.29	31.75	-54.64	86.39	24.00
14	LAYBARGE	23.34	3.62	5.40	73.04	86.602	0.000	327.06	-222.60	31.49	-344.61	376.10	104.47
16	LAYBARGE	19.27	3.17	7.15	77.13	0.000	0.000	327.29	-98.17	31.51	-151.98	183.49	50.97
17	LAYBARGE	8.89	1.80	7.11	87.59	0.000	0.044	324.67	65.23	31.26	100.99	132.25	36.74
19	LAYBARGE	4.88	1.33	6.31	91.63	0.000	0.000	323.65	87.29	31.16	135.14	166.31	46.20
20	LAYBARGE	3.06	1.14	5.88	93.46	0.000	0.517	323.23	93.10	31.12	144.14	175.26	48.68
24	STINGER	-7.48	0.29	3.29	104.04	0.000	0.617	321.57	86.20	30.96	133.45	164.41	45.67
26	STINGER	-16.59	-0.10	1.92	113.16	0.000	0.046	321.04	18.25	30.91	28.26	59.17	16.44
29	STINGER	-26.47	-0.50	3.51	123.05	55.048	0.000	319.97	-173.64	30.78	-268.83	299.63	83.23
31	STINGER	-37.36	-1.48	6.27	133.98	17.222	0.000	319.56	-69.96	30.69	-108.31	139.08	38.63
33	STINGER	-40.35	-1.82	6.66	136.99	0.000	0.380	319.31	-33.40	30.64	-51.70	82.44	22.90
35	SAGBEND	-46.71	-2.58	6.83	143.40	0.000	0.000	318.57	4.01	30.53	6.21	36.88	10.24
36	SAGBEND	-50.05	-2.98	6.78	146.76	0.000	0.000	318.17	7.12	30.47	11.02	41.65	11.57
37	SAGBEND	-53.39	-3.37	6.74	150.13	0.000	0.000	317.78	0.00	30.41	0.00	30.59	8.50
38	SAGBEND	-58.73	-3.94	6.07	155.50	0.000	0.000	317.80	0.00	0.00	0.00	0.00	0.00
39	SAGBEND	-64.75	-4.58	6.07	161.55	0.000	0.000	317.80	0.00	0.00	0.00	0.00	0.00
40	SAGBEND	-70.77	-5.22	6.06	167.60	0.000	0.000	317.80	0.00	0.00	0.00	0.00	0.00
41	SAGBEND	-76.78	-5.86	6.06	173.65	0.000	0.000	317.80	0.00	0.00	0.00	0.00	0.00
42	SAGBEND	-82.80	-6.49	6.06	179.70	0.000	0.000	317.79	0.00	0.00	0.00	0.00	0.00
43	SAGBEND	-88.82	-7.13	6.05	185.75	0.000	0.000	317.79	0.00	0.00	0.00	0.00	0.00
44	SAGBEND	-94.83	-7.77	6.05	191.80	0.000	0.000	317.79	0.00	0.00	0.00	0.00	0.00
45	SAGBEND	-100.85	-8.41	6.05	197.85	0.000	0.000	317.79	0.00	0.00	0.00	0.00	0.00
46	SAGBEND	-106.86	-9.05	6.05	203.90	0.000	0.000	317.79	0.00	0.00	0.00	0.00	0.00
47	SAGBEND	-112.88	-9.68	6.04	209.95	0.000	0.000	317.79	0.00	0.00	0.00	0.00	0.00
48	SAGBEND	-118.90	-10.32	6.04	216.00	0.000	0.000	317.78	0.00	0.00	0.00	0.00	0.00
49	SAGBEND	-124.91	-10.96	6.04	222.05	0.000	0.000	317.78	0.00	0.00	0.00	0.00	0.00
50	SAGBEND	-130.93	-11.59	6.03	228.10	0.000	0.000	317.78	0.00	0.00	0.00	0.00	0.00
51	SAGBEND	-136.95	-12.23	6.03	234.15	0.000	0.000	317.78	0.00	0.00	0.00	0.00	0.00
52	SAGBEND	-142.96	-12.86	6.03	240.20	0.000	0.000	317.78	0.00	0.00	0.00	0.00	0.00
53	SAGBEND	-148.98	-13.50	6.03	246.25	0.000	0.000	317.78	0.00	0.00	0.00	0.00	0.00
54	SAGBEND	-155.00	-14.13	6.02	252.30	0.000	0.000	317.77	0.00	0.00	0.00	0.00	0.00
55	SAGBEND	-161.01	-14.77	6.02	258.35	0.000	0.000	317.77	0.00	0.00	0.00	0.00	0.00
56	SAGBEND	-167.03	-15.40	6.02	264.40	0.000	0.000	317.77	0.00	0.00	0.00	0.00	0.00
57	SAGBEND	-173.05	-16.04	6.01	270.45	0.000	0.000	317.77	0.00	0.00	0.00	0.00	0.00
58	SAGBEND	-179.06	-16.67	6.01	276.50	0.000	0.000	317.77	0.00	0.00	0.00	0.00	0.00
59	SAGBEND	-185.08	-17.30	6.01	282.55	0.000	0.000	317.77	0.00	0.00	0.00	0.00	0.00
60	SAGBEND	-191.10	-17.94	6.01	288.60	0.000	0.000	317.76	0.00	0.00	0.00	0.00	0.00

S T A T I C P I P E C O O R D I N A T E S, F O R C E S A N D S T R E S S E S

NODE NO.	PIPE SECTION	X COORD (M)	Y COORD (M)	VERT ANGLE (DEG)	PIPE LENGTH (M)	SUPPORT REACTION (KN)	SEPARA -TION (M)	AXIAL TENSION (KN)	BENDING MOMENT (KN-M)	TENSILE STRESS (MPA)	BENDING STRESS (MPA)	TOTAL STRESS (MPA)	PERCNT YIELD (PCT)
61	SAGBEND	-197.12	-18.57	6.00	294.65	0.000	0.000	317.76	0.00	0.00	0.00	0.00	0.00
62	SAGBEND	-203.13	-19.20	6.00	300.70	0.000	0.000	317.76	0.00	0.00	0.00	0.00	0.00
63	SAGBEND	-209.15	-19.84	6.00	306.75	0.000	0.000	317.76	0.00	0.00	0.00	0.00	0.00
64	SAGBEND	-215.17	-20.47	5.99	312.80	0.000	0.000	317.76	0.00	0.00	0.00	0.00	0.00
65	SAGBEND	-221.18	-21.10	5.99	318.85	0.000	0.000	317.76	0.00	0.00	0.00	0.00	0.00
66	SAGBEND	-227.20	-21.73	5.99	324.90	0.000	0.000	317.75	0.00	0.00	0.00	0.00	0.00
67	SAGBEND	-233.22	-22.36	5.99	330.95	0.000	0.000	317.75	0.00	0.00	0.00	0.00	0.00
68	SAGBEND	-239.23	-22.99	5.98	337.00	0.000	0.000	317.75	0.00	0.00	0.00	0.00	0.00
69	SAGBEND	-245.25	-23.62	5.98	343.05	0.000	0.000	317.75	0.00	0.00	0.00	0.00	0.00
70	SAGBEND	-248.77	-23.99	5.98	346.59	0.000	0.000	317.75	0.00	0.00	0.00	0.00	0.00
71	SAGBEND	-252.29	-24.36	5.98	350.13	0.000	0.000	317.75	0.00	0.00	0.00	0.00	0.00
72	SAGBEND	-257.29	-24.88	5.89	355.15	0.000	0.000	317.70	0.00	0.00	0.00	0.00	0.00
73	SAGBEND	-263.31	-25.50	5.79	361.20	0.000	0.000	317.64	0.00	0.00	0.00	0.00	0.00
74	SAGBEND	-269.33	-26.10	5.69	367.25	0.000	0.000	317.58	0.00	0.00	0.00	0.00	0.00
75	SAGBEND	-275.35	-26.69	5.58	373.30	0.000	0.000	317.53	0.00	0.00	0.00	0.00	0.00
76	SAGBEND	-281.37	-27.28	5.48	379.35	0.000	0.000	317.47	0.00	0.00	0.00	0.00	0.00
77	SAGBEND	-287.39	-27.85	5.38	385.40	0.000	0.000	317.42	0.00	0.00	0.00	0.00	0.00
78	SAGBEND	-293.42	-28.41	5.28	391.45	0.000	0.000	317.37	0.00	0.00	0.00	0.00	0.00
79	SAGBEND	-299.44	-28.96	5.17	397.50	0.000	0.000	317.31	0.00	0.00	0.00	0.00	0.00
80	SAGBEND	-305.47	-29.50	5.07	403.55	0.000	0.000	317.26	0.00	0.00	0.00	0.00	0.00
81	SAGBEND	-311.49	-30.03	4.97	409.60	0.000	0.000	317.21	0.00	0.00	0.00	0.00	0.00
82	SAGBEND	-317.52	-30.55	4.87	415.65	0.000	0.000	317.16	0.00	0.00	0.00	0.00	0.00
83	SAGBEND	-323.55	-31.06	4.76	421.70	0.000	0.000	317.12	0.00	0.00	0.00	0.00	0.00
84	SAGBEND	-329.58	-31.56	4.66	427.75	0.000	0.000	317.07	0.00	0.00	0.00	0.00	0.00
85	SAGBEND	-335.61	-32.04	4.56	433.80	0.000	0.000	317.02	0.00	0.00	0.00	0.00	0.00
86	SAGBEND	-341.64	-32.52	4.46	439.85	0.000	0.000	316.98	0.00	0.00	0.00	0.00	0.00
87	SAGBEND	-347.67	-32.98	4.35	445.90	0.000	0.000	316.93	0.00	0.00	0.00	0.00	0.00
88	SAGBEND	-353.71	-33.44	4.25	451.95	0.000	0.000	316.89	0.00	0.00	0.00	0.00	0.00
89	SAGBEND	-359.74	-33.88	4.15	458.00	0.000	0.000	316.85	0.00	0.00	0.00	0.00	0.00
90	SAGBEND	-365.78	-34.31	4.04	464.05	0.000	0.000	316.81	0.00	0.00	0.00	0.00	0.00
91	SAGBEND	-371.81	-34.73	3.94	470.10	0.000	0.000	316.77	0.00	0.00	0.00	0.00	0.00
92	SAGBEND	-377.85	-35.14	3.84	476.15	0.000	0.000	316.73	0.00	0.00	0.00	0.00	0.00
93	SAGBEND	-383.89	-35.54	3.73	482.20	0.000	0.000	316.69	0.00	0.00	0.00	0.00	0.00
94	SAGBEND	-389.92	-35.93	3.63	488.25	0.000	0.000	316.66	0.00	0.00	0.00	0.00	0.00
95	SAGBEND	-395.96	-36.31	3.53	494.31	0.000	0.000	316.62	0.00	0.00	0.00	0.00	0.00
96	SAGBEND	-402.00	-36.68	3.43	500.36	0.000	0.000	316.59	0.00	0.00	0.00	0.00	0.00
97	SAGBEND	-408.04	-37.03	3.32	506.41	0.000	0.000	316.55	0.00	0.00	0.00	0.00	0.00
98	SAGBEND	-414.08	-37.38	3.22	512.46	0.000	0.000	316.52	0.00	0.00	0.00	0.00	0.00
99	SAGBEND	-420.12	-37.71	3.12	518.51	0.000	0.000	316.49	0.00	0.00	0.00	0.00	0.00
100	SAGBEND	-426.16	-38.04	3.01	524.56	0.000	0.000	316.46	0.00	0.00	0.00	0.00	0.00
101	SAGBEND	-432.20	-38.35	2.91	530.61	0.000	0.000	316.43	0.00	0.00	0.00	0.00	0.00
102	SAGBEND	-438.25	-38.65	2.81	536.66	0.000	0.000	316.40	0.00	0.00	0.00	0.00	0.00
103	SAGBEND	-444.29	-38.94	2.70	542.71	0.000	0.000	316.37	0.00	0.00	0.00	0.00	0.00
104	SAGBEND	-450.33	-39.22	2.60	548.76	0.000	0.000	316.35	0.00	0.00	0.00	0.00	0.00
105	SAGBEND	-456.38	-39.49	2.50	554.81	0.000	0.000	316.32	0.00	0.00	0.00	0.00	0.00

S T A T I C P I P E C O O R D I N A T E S, F O R C E S A N D S T R E S S E S

NODE NO.	PIPE SECTION	X COORD (M)	Y COORD (M)	VERT ANGLE (DEG)	PIPE LENGTH (M)	SUPPORT REACTION (KN)	SEPARA -TION (M)	AXIAL TENSION (KN)	BENDING MOMENT (KN-M)	TENSILE STRESS (MPA)	BENDING STRESS (MPA)	TOTAL STRESS (MPA)	PERCNT YIELD (PCT)
106	SAGBEND	-462.42	-39.75	2.39	560.86	0.000	0.000	316.30	0.00	0.00	0.00	0.00	0.00
107	SAGBEND	-468.47	-39.99	2.29	566.91	0.000	0.000	316.27	0.00	0.00	0.00	0.00	0.00
108	SAGBEND	-474.51	-40.23	2.19	572.96	0.000	0.000	316.25	0.00	0.00	0.00	0.00	0.00
109	SAGBEND	-480.56	-40.46	2.08	579.01	0.000	0.000	316.23	0.00	0.00	0.00	0.00	0.00
110	SAGBEND	-486.61	-40.67	1.98	585.06	0.000	0.000	316.21	0.00	0.00	0.00	0.00	0.00
111	SAGBEND	-492.65	-40.87	1.88	591.11	0.000	0.000	316.19	0.00	0.00	0.00	0.00	0.00
112	SAGBEND	-498.70	-41.07	1.77	597.16	0.000	0.000	316.17	0.00	0.00	0.00	0.00	0.00
113	SAGBEND	-504.75	-41.25	1.67	603.21	0.000	0.000	316.15	0.00	0.00	0.00	0.00	0.00
114	SAGBEND	-510.80	-41.42	1.57	609.26	0.000	0.000	316.14	0.00	0.00	0.00	0.00	0.00
115	SAGBEND	-516.84	-41.58	1.46	615.31	0.000	0.000	316.12	0.00	0.00	0.00	0.00	0.00
116	SAGBEND	-522.89	-41.73	1.36	621.36	0.000	0.000	316.11	0.00	0.00	0.00	0.00	0.00
117	SAGBEND	-528.94	-41.87	1.26	627.41	0.000	0.000	316.10	0.00	0.00	0.00	0.00	0.00
118	SAGBEND	-534.99	-41.99	1.15	633.46	0.000	0.000	316.08	0.00	0.00	0.00	0.00	0.00
119	SAGBEND	-541.04	-42.11	1.05	639.51	0.000	0.000	316.07	0.00	0.00	0.00	0.00	0.00
120	SAGBEND	-547.09	-42.22	0.95	645.56	0.000	0.000	316.06	0.00	0.00	0.00	0.00	0.00
121	SAGBEND	-553.14	-42.31	0.84	651.61	0.000	0.000	316.05	0.00	0.00	0.00	0.00	0.00
122	SAGBEND	-559.19	-42.39	0.74	657.66	0.000	0.000	316.05	0.00	0.00	0.00	0.00	0.00
123	SAGBEND	-565.24	-42.47	0.64	663.71	0.000	0.000	316.04	0.00	0.00	0.00	0.00	0.00
124	SAGBEND	-571.29	-42.53	0.53	669.76	0.000	0.000	316.03	0.00	0.00	0.00	0.00	0.00
125	SAGBEND	-577.34	-42.58	0.43	675.81	0.000	0.000	316.03	0.00	0.00	0.00	0.00	0.00
126	SAGBEND	-583.39	-42.62	0.32	681.86	0.000	0.000	316.03	0.00	0.00	0.00	0.00	0.00
127	SAGBEND	-589.44	-42.65	0.22	687.91	0.000	0.000	316.02	0.00	0.00	0.00	0.00	0.00
128	SAGBEND	-595.49	-42.66	0.12	693.96	0.006	0.000	316.02	0.00	0.00	0.00	0.00	0.00
129	SEABED	-601.54	-42.67	0.03	700.01	0.267	0.000	316.02	0.00	0.00	0.00	0.00	0.00
130	SEABED	-607.59	-42.67	0.00	706.06	0.515	0.000	316.02	0.00	0.00	0.00	0.00	0.00
131	SEABED	-613.64	-42.67	0.00	712.11	0.561	0.000	316.02	0.00	0.00	0.00	0.00	0.00
132	SEABED	-619.69	-42.67	0.00	718.16	0.569	0.000	316.02	0.00	0.00	0.00	0.00	0.00
133	SEABED	-625.74	-42.67	0.00	724.21	0.570	0.000	316.02	0.00	0.00	0.00	0.00	0.00
134	SEABED	-631.79	-42.67	0.00	730.26	0.569	0.000	316.02	0.00	0.00	0.00	0.00	0.00
135	SEABED	-637.84	-42.67	0.00	736.31	0.559	0.000	316.02	0.00	0.00	0.00	0.00	0.00
136	SEABED	-643.89	-42.67	-0.01	742.36	0.424	0.000	316.02	0.00	0.00	0.00	0.00	0.00
137	SEABED	-647.78	-42.67	-0.02	746.25	0.240	0.000	316.02	0.00	0.00	0.00	0.00	0.00
138	SEABED	-651.67	-42.67	-0.06	750.14	0.000	0.000	316.02	0.00	0.00	0.00	0.00	0.00

S T A T I C P I P E C O O R D I N A T E S, F O R C E S A N D S T R E S S E S

NODE NO.	PIPE SECTION	X COORD (M)	Y COORD (M)	VERT ANGLE (DEG)	PIPE LENGTH (M)	SUPPORT REACTION (KN)	SEPARA -TION (M)	AXIAL TENSION (KN)	BENDING MOMENT (KN-M)	TENSILE STRESS (MPA)	BENDING STRESS (MPA)	TOTAL STRESS (MPA)	PERCNT YIELD (PCT)
1	LAYBARGE	96.31	6.41	1.93	0.00	9.949	0.000	0.00	2.75	0.00	4.25	4.25	1.18
3	LAYBARGE	84.28	6.05	1.58	12.04	24.033	0.000	-0.73	-19.03	-0.07	-29.47	29.54	8.20
5	LAYBARGE	73.45	5.73	1.91	22.87	24.772	0.000	-1.40	-30.19	-0.13	-46.73	46.87	13.02
7	TENSIONR	60.11	5.24	2.28	36.23	30.987	0.000	331.62	-21.14	31.93	-32.73	64.66	17.96
9	LAYBARGE	51.10	4.87	2.21	45.24	0.000	0.000	330.91	23.14	31.86	35.82	67.68	18.80
10	LAYBARGE	46.45	4.70	2.03	49.89	14.227	0.000	330.58	5.37	31.83	8.31	40.14	11.15
12	LAYBARGE	35.36	4.31	2.26	60.99	25.113	0.000	329.72	-42.67	31.75	-66.06	97.81	27.17
14	LAYBARGE	23.34	3.62	5.00	73.04	62.154	0.000	327.56	-179.07	31.54	-277.23	308.77	85.77
16	LAYBARGE	19.27	3.21	6.56	77.13	0.000	0.000	327.29	-113.83	31.51	-176.23	207.75	57.71
17	LAYBARGE	8.90	1.76	9.61	87.60	59.407	0.000	323.96	-163.16	31.19	-252.60	283.79	78.83
19	LAYBARGE	4.92	1.03	10.89	91.64	0.000	0.000	323.09	-77.91	31.11	-120.62	151.73	42.15
20	LAYBARGE	3.10	0.68	11.19	93.49	0.000	0.059	322.46	-49.46	31.05	-76.58	107.63	29.90
24	STINGER	-7.54	-1.48	11.53	104.35	0.000	0.067	319.67	-3.89	30.70	-6.02	36.79	10.22
26	STINGER	-16.49	-3.35	12.35	113.49	26.111	0.000	317.64	-86.43	30.40	-133.80	164.38	45.66
29	STINGER	-26.11	-5.61	14.19	123.38	21.805	0.000	315.36	-90.76	30.05	-140.51	170.86	47.46
31	STINGER	-36.67	-8.47	16.07	134.31	27.182	0.000	312.54	-81.08	29.61	-125.52	155.60	43.22
33	STINGER	-39.55	-9.31	16.52	137.31	0.000	0.390	311.82	-36.53	29.50	-56.55	86.55	24.04
35	SAGBEND	-45.37	-11.06	16.61	143.40	0.000	0.000	310.10	17.71	29.23	27.42	57.26	15.91
36	SAGBEND	-51.18	-12.76	16.11	149.45	0.000	0.000	308.36	44.38	28.97	68.70	98.37	27.32
37	SAGBEND	-57.00	-14.40	15.30	155.50	0.000	0.000	306.69	57.77	28.71	89.44	118.94	33.04
38	SAGBEND	-62.85	-15.95	14.35	161.55	0.000	0.000	305.12	64.66	28.48	100.10	129.44	35.96
39	SAGBEND	-68.72	-17.40	13.31	167.60	0.000	0.000	303.67	68.29	28.25	105.73	134.93	37.48
40	SAGBEND	-74.62	-18.74	12.24	173.65	0.000	0.000	302.32	70.25	28.05	108.75	137.82	38.28
41	SAGBEND	-80.55	-19.96	11.14	179.70	0.000	0.000	301.10	71.21	27.86	110.25	139.20	38.67
42	SAGBEND	-86.49	-21.07	10.03	185.75	0.000	0.000	299.99	71.39	27.69	110.53	139.37	38.71
43	SAGBEND	-92.46	-22.07	8.93	191.80	0.000	0.000	298.99	70.61	27.54	109.32	138.06	38.35
44	SAGBEND	-98.45	-22.95	7.85	197.85	0.000	0.000	298.12	68.22	27.40	105.62	134.28	37.30
45	SAGBEND	-104.45	-23.73	6.83	203.90	0.000	0.000	297.36	62.81	27.29	97.24	125.83	34.95
46	SAGBEND	-110.46	-24.40	5.93	209.95	0.000	0.000	296.72	51.46	27.19	79.66	108.19	30.05
47	SAGBEND	-116.48	-24.98	5.29	216.00	0.000	0.000	296.18	28.28	27.10	43.79	72.28	20.08
48	SAGBEND	-120.60	-25.36	5.13	220.13	0.000	0.000	295.82	0.00	27.05	0.00	28.52	7.92
49	SAGBEND	-124.57	-25.60	3.46	224.11	0.000	0.000	295.94	0.00	0.00	0.00	0.00	0.00
50	SAGBEND	-128.55	-25.84	3.46	228.10	0.000	0.000	295.94	0.00	0.00	0.00	0.00	0.00
51	SAGBEND	-134.59	-26.20	3.46	234.15	0.000	0.000	295.94	0.00	0.00	0.00	0.00	0.00
52	SAGBEND	-140.63	-26.57	3.45	240.20	0.000	0.000	295.94	0.00	0.00	0.00	0.00	0.00
53	SAGBEND	-146.67	-26.93	3.45	246.25	0.000	0.000	295.94	0.00	0.00	0.00	0.00	0.00
54	SAGBEND	-152.70	-27.30	3.45	252.30	0.000	0.000	295.94	0.00	0.00	0.00	0.00	0.00
55	SAGBEND	-158.74	-27.66	3.45	258.35	0.000	0.000	295.94	0.00	0.00	0.00	0.00	0.00
56	SAGBEND	-164.78	-28.03	3.44	264.39	0.000	0.000	295.94	0.00	0.00	0.00	0.00	0.00
57	SAGBEND	-170.82	-28.39	3.44	270.44	0.000	0.000	295.94	0.00	0.00	0.00	0.00	0.00
58	SAGBEND	-176.86	-28.75	3.44	276.49	0.000	0.000	295.94	0.00	0.00	0.00	0.00	0.00
59	SAGBEND	-182.90	-29.11	3.43	282.54	0.000	0.000	295.94	0.00	0.00	0.00	0.00	0.00
60	SAGBEND	-188.94	-29.48	3.43	288.59	0.000	0.000	295.93	0.00	0.00	0.00	0.00	0.00

S T A T I C P I P E C O O R D I N A T E S, F O R C E S A N D S T R E S S E S

NODE NO.	PIPE SECTION	X COORD (M)	Y COORD (M)	VERT ANGLE (DEG)	PIPE LENGTH (M)	SUPPORT REACTION (KN)	SEPARA -TION (M)	AXIAL TENSION (KN)	BENDING MOMENT (KN-M)	TENSILE STRESS (MPA)	BENDING STRESS (MPA)	TOTAL STRESS (MPA)	PERCNT YIELD (PCT)
61	SAGBEND	-194.98	-29.84	3.43	294.64	0.000	0.000	295.93	0.00	0.00	0.00	0.00	0.00
62	SAGBEND	-201.02	-30.20	3.42	300.69	0.000	0.000	295.93	0.00	0.00	0.00	0.00	0.00
63	SAGBEND	-207.06	-30.56	3.42	306.74	0.000	0.000	295.93	0.00	0.00	0.00	0.00	0.00
64	SAGBEND	-213.09	-30.92	3.42	312.79	0.000	0.000	295.93	0.00	0.00	0.00	0.00	0.00
65	SAGBEND	-219.13	-31.28	3.41	318.84	0.000	0.000	295.93	0.00	0.00	0.00	0.00	0.00
66	SAGBEND	-225.17	-31.64	3.41	324.89	0.000	0.000	295.93	0.00	0.00	0.00	0.00	0.00
67	SAGBEND	-231.21	-32.00	3.41	330.94	0.000	0.000	295.93	0.00	0.00	0.00	0.00	0.00
68	SAGBEND	-237.25	-32.36	3.41	336.99	0.000	0.000	295.93	0.00	0.00	0.00	0.00	0.00
69	SAGBEND	-243.29	-32.72	3.40	343.04	0.000	0.000	295.93	0.00	0.00	0.00	0.00	0.00
70	SAGBEND	-249.33	-33.08	3.40	349.09	0.000	0.000	295.93	0.00	0.00	0.00	0.00	0.00
71	SAGBEND	-255.37	-33.44	3.40	355.14	0.000	0.000	295.92	0.00	0.00	0.00	0.00	0.00
72	SAGBEND	-261.41	-33.80	3.39	361.19	0.000	0.000	295.92	0.00	0.00	0.00	0.00	0.00
73	SAGBEND	-267.45	-34.15	3.39	367.24	0.000	0.000	295.92	0.00	0.00	0.00	0.00	0.00
74	SAGBEND	-273.49	-34.51	3.39	373.29	0.000	0.000	295.92	0.00	0.00	0.00	0.00	0.00
75	SAGBEND	-279.53	-34.87	3.38	379.34	0.000	0.000	295.92	0.00	0.00	0.00	0.00	0.00
76	SAGBEND	-285.56	-35.23	3.38	385.39	0.000	0.000	295.92	0.00	0.00	0.00	0.00	0.00
77	SAGBEND	-291.60	-35.58	3.38	391.44	0.000	0.000	295.92	0.00	0.00	0.00	0.00	0.00
78	SAGBEND	-297.64	-35.94	3.38	397.49	0.000	0.000	295.92	0.00	0.00	0.00	0.00	0.00
79	SAGBEND	-303.68	-36.29	3.37	403.54	0.000	0.000	295.92	0.00	0.00	0.00	0.00	0.00
80	SAGBEND	-309.72	-36.65	3.37	409.59	0.000	0.000	295.92	0.00	0.00	0.00	0.00	0.00
81	SAGBEND	-315.76	-37.01	3.37	415.64	0.000	0.000	295.91	0.00	0.00	0.00	0.00	0.00
82	SAGBEND	-320.23	-37.27	3.36	420.12	0.000	0.000	295.91	0.00	0.00	0.00	0.00	0.00
83	SAGBEND	-324.04	-37.49	3.29	423.93	0.000	0.000	295.89	0.00	0.00	0.00	0.00	0.00
84	SAGBEND	-327.84	-37.71	3.22	427.74	0.000	0.000	295.87	0.00	0.00	0.00	0.00	0.00
85	SAGBEND	-333.88	-38.04	3.11	433.79	0.000	0.000	295.84	0.00	0.00	0.00	0.00	0.00
86	SAGBEND	-339.92	-38.36	3.00	439.84	0.000	0.000	295.81	0.00	0.00	0.00	0.00	0.00
87	SAGBEND	-345.96	-38.68	2.89	445.89	0.000	0.000	295.78	0.00	0.00	0.00	0.00	0.00
88	SAGBEND	-352.01	-38.97	2.78	451.94	0.000	0.000	295.75	0.00	0.00	0.00	0.00	0.00
89	SAGBEND	-358.05	-39.26	2.67	457.99	0.000	0.000	295.73	0.00	0.00	0.00	0.00	0.00
90	SAGBEND	-364.09	-39.54	2.56	464.04	0.000	0.000	295.70	0.00	0.00	0.00	0.00	0.00
91	SAGBEND	-370.14	-39.80	2.45	470.09	0.000	0.000	295.68	0.00	0.00	0.00	0.00	0.00
92	SAGBEND	-376.18	-40.06	2.34	476.14	0.000	0.000	295.65	0.00	0.00	0.00	0.00	0.00
93	SAGBEND	-382.23	-40.30	2.23	482.19	0.000	0.000	295.63	0.00	0.00	0.00	0.00	0.00
94	SAGBEND	-388.27	-40.53	2.12	488.24	0.000	0.000	295.61	0.00	0.00	0.00	0.00	0.00
95	SAGBEND	-394.32	-40.75	2.01	494.29	0.000	0.000	295.59	0.00	0.00	0.00	0.00	0.00
96	SAGBEND	-400.36	-40.95	1.90	500.34	0.000	0.000	295.57	0.00	0.00	0.00	0.00	0.00
97	SAGBEND	-406.41	-41.15	1.79	506.39	0.000	0.000	295.55	0.00	0.00	0.00	0.00	0.00
98	SAGBEND	-412.46	-41.33	1.68	512.44	0.000	0.000	295.53	0.00	0.00	0.00	0.00	0.00
99	SAGBEND	-418.50	-41.50	1.57	518.49	0.000	0.000	295.51	0.00	0.00	0.00	0.00	0.00
100	SAGBEND	-424.55	-41.66	1.46	524.54	0.000	0.000	295.50	0.00	0.00	0.00	0.00	0.00
101	SAGBEND	-430.60	-41.81	1.35	530.59	0.000	0.000	295.49	0.00	0.00	0.00	0.00	0.00
102	SAGBEND	-436.65	-41.94	1.23	536.64	0.000	0.000	295.47	0.00	0.00	0.00	0.00	0.00
103	SAGBEND	-442.70	-42.07	1.12	542.69	0.000	0.000	295.46	0.00	0.00	0.00	0.00	0.00
104	SAGBEND	-448.74	-42.18	1.01	548.73	0.000	0.000	295.45	0.00	0.00	0.00	0.00	0.00
105	SAGBEND	-454.79	-42.28	0.90	554.78	0.000	0.000	295.44	0.00	0.00	0.00	0.00	0.00

S T A T I C P I P E C O O R D I N A T E S, F O R C E S A N D S T R E S S E S

NODE NO.	PIPE SECTION	X COORD (M)	Y COORD (M)	VERT ANGLE (DEG)	PIPE LENGTH (M)	SUPPORT REACTION (KN)	SEPARA -TION (M)	AXIAL TENSION (KN)	BENDING MOMENT (KN-M)	TENSILE STRESS (MPA)	BENDING STRESS (MPA)	TOTAL STRESS (MPA)	PERCNT YIELD (PCT)
106	SAGBEND	-460.84	-42.37	0.79	560.83	0.000	0.000	295.43	0.00	0.00	0.00	0.00	0.00

107	SAGBEND	-466.89	-42.45	0.68	566.88	0.000	0.000	295.43	0.00	0.00	0.00	0.00	0.00
108	SAGBEND	-472.94	-42.52	0.57	572.93	0.000	0.000	295.42	0.00	0.00	0.00	0.00	0.00
109	SAGBEND	-478.99	-42.57	0.46	578.98	0.000	0.000	295.41	0.00	0.00	0.00	0.00	0.00
110	SAGBEND	-485.04	-42.61	0.35	585.03	0.000	0.000	295.41	0.00	0.00	0.00	0.00	0.00
111	SAGBEND	-491.09	-42.64	0.24	591.08	0.000	0.000	295.41	0.00	0.00	0.00	0.00	0.00
112	SAGBEND	-497.14	-42.66	0.13	597.13	0.004	0.000	295.41	0.00	0.00	0.00	0.00	0.00
113	SEABED	-503.19	-42.67	0.03	603.18	0.258	0.000	295.40	0.00	0.00	0.00	0.00	0.00
114	SEABED	-509.24	-42.67	0.00	609.23	0.516	0.000	295.40	0.00	0.00	0.00	0.00	0.00
115	SEABED	-515.29	-42.67	0.00	615.28	0.562	0.000	295.40	0.00	0.00	0.00	0.00	0.00
116	SEABED	-521.34	-42.67	0.00	621.33	0.569	0.000	295.40	0.00	0.00	0.00	0.00	0.00
117	SEABED	-527.39	-42.67	0.00	627.38	0.571	0.000	295.40	0.00	0.00	0.00	0.00	0.00
118	SEABED	-533.44	-42.67	0.00	633.43	0.571	0.000	295.40	0.00	0.00	0.00	0.00	0.00
119	SEABED	-539.49	-42.67	0.00	639.48	0.571	0.000	295.40	0.00	0.00	0.00	0.00	0.00
120	SEABED	-545.54	-42.67	0.00	645.53	0.571	0.000	295.40	0.00	0.00	0.00	0.00	0.00
121	SEABED	-551.59	-42.67	0.00	651.58	0.571	0.000	295.40	0.00	0.00	0.00	0.00	0.00
122	SEABED	-557.64	-42.67	0.00	657.63	0.571	0.000	295.40	0.00	0.00	0.00	0.00	0.00
123	SEABED	-563.69	-42.67	0.00	663.68	0.571	0.000	295.40	0.00	0.00	0.00	0.00	0.00
124	SEABED	-569.74	-42.67	0.00	669.73	0.571	0.000	295.40	0.00	0.00	0.00	0.00	0.00
125	SEABED	-575.79	-42.67	0.00	675.78	0.571	0.000	295.40	0.00	0.00	0.00	0.00	0.00
126	SEABED	-581.84	-42.67	0.00	681.83	0.571	0.000	295.40	0.00	0.00	0.00	0.00	0.00
127	SEABED	-587.89	-42.67	0.00	687.88	0.571	0.000	295.40	0.00	0.00	0.00	0.00	0.00
128	SEABED	-593.94	-42.67	0.00	693.93	0.571	0.000	295.40	0.00	0.00	0.00	0.00	0.00
129	SEABED	-599.98	-42.67	0.00	699.98	0.571	0.000	295.40	0.00	0.00	0.00	0.00	0.00
130	SEABED	-606.03	-42.67	0.00	706.03	0.571	0.000	295.40	0.00	0.00	0.00	0.00	0.00
131	SEABED	-612.08	-42.67	0.00	712.08	0.571	0.000	295.40	0.00	0.00	0.00	0.00	0.00
132	SEABED	-618.13	-42.67	0.00	718.13	0.571	0.000	295.40	0.00	0.00	0.00	0.00	0.00
133	SEABED	-624.18	-42.67	0.00	724.18	0.571	0.000	295.40	0.00	0.00	0.00	0.00	0.00
134	SEABED	-630.23	-42.67	0.00	730.23	0.571	0.000	295.40	0.00	0.00	0.00	0.00	0.00
135	SEABED	-636.28	-42.67	0.00	736.28	0.571	0.000	295.40	0.00	0.00	0.00	0.00	0.00
136	SEABED	-642.33	-42.67	0.00	742.33	0.571	0.000	295.40	0.00	0.00	0.00	0.00	0.00
137	SEABED	-648.38	-42.67	0.00	748.38	0.571	0.000	295.40	0.00	0.00	0.00	0.00	0.00
138	SEABED	-654.43	-42.67	0.00	754.43	0.571	0.000	295.40	0.00	0.00	0.00	0.00	0.00
139	SEABED	-660.48	-42.67	0.00	760.48	0.571	0.000	295.40	0.00	0.00	0.00	0.00	0.00
140	SEABED	-666.53	-42.67	0.00	766.53	0.571	0.000	295.40	0.00	0.00	0.00	0.00	0.00
141	SEABED	-672.58	-42.67	0.00	772.57	0.571	0.000	295.40	0.00	0.00	0.00	0.00	0.00
142	SEABED	-678.63	-42.67	0.00	778.62	0.571	0.000	295.40	0.00	0.00	0.00	0.00	0.00
143	SEABED	-684.68	-42.67	0.00	784.67	0.571	0.000	295.40	0.00	0.00	0.00	0.00	0.00
144	SEABED	-690.73	-42.67	0.00	790.72	0.571	0.000	295.40	0.00	0.00	0.00	0.00	0.00
145	SEABED	-696.78	-42.67	0.00	796.77	0.570	0.000	295.40	0.00	0.00	0.00	0.00	0.00
146	SEABED	-702.83	-42.67	0.00	802.82	0.567	0.000	295.40	0.00	0.00	0.00	0.00	0.00
147	SEABED	-708.88	-42.67	0.00	808.87	0.548	0.000	295.40	0.00	0.00	0.00	0.00	0.00
148	SEABED	-714.93	-42.67	-0.01	814.92	0.408	0.000	295.40	0.00	0.00	0.00	0.00	0.00
149	SEABED	-720.11	-42.67	-0.06	820.10	0.000	0.000	295.40	0.00	0.00	0.00	0.00	0.00

S T A T I C P I P E C O O R D I N A T E S, F O R C E S A N D S T R E S S E S

NODE NO.	PIPE SECTION	X COORD (M)	Y COORD (M)	VERT ANGLE (DEG)	PIPE LENGTH (M)	SUPPORT REACTION (KN)	SEPARA -TION (M)	AXIAL TENSION (KN)	BENDING MOMENT (KN-M)	TENSILE STRESS (MPA)	BENDING STRESS (MPA)	TOTAL STRESS (MPA)	PERCNT YIELD (PCT)
1	LAYBARGE	96.31	6.41	1.93	0.00	9.951	0.000	0.00	2.75	0.00	4.26	4.26	1.18
3	LAYBARGE	84.28	6.05	1.58	12.04	24.012	0.000	-0.73	-19.00	-0.07	-29.42	29.49	8.19
5	LAYBARGE	73.45	5.73	1.91	22.87	24.840	0.000	-1.40	-30.32	-0.13	-46.94	47.07	13.08
7	TENSIONR	60.11	5.24	2.27	36.23	30.803	0.000	359.82	-20.76	34.65	-32.14	66.79	18.55
9	LAYBARGE	51.10	4.87	2.21	45.24	0.000	0.000	359.11	22.01	34.58	34.08	68.66	19.07
10	LAYBARGE	46.45	4.70	2.05	49.89	15.194	0.000	358.78	3.87	34.55	5.98	40.53	11.26
12	LAYBARGE	35.36	4.31	2.19	60.99	20.733	0.000	357.94	-37.29	34.47	-57.73	92.20	25.61
14	LAYBARGE	23.34	3.62	5.31	73.04	81.805	0.000	355.37	-214.17	34.22	-331.57	365.79	101.61
16	LAYBARGE	19.27	3.17	7.04	77.13	0.000	0.000	355.47	-106.86	34.23	-165.43	199.66	55.46
17	LAYBARGE	8.89	1.76	8.13	87.60	20.098	0.000	352.87	-16.78	33.98	-25.98	59.95	16.65
19	LAYBARGE	4.90	1.19	8.10	91.64	0.000	0.000	351.72	23.61	33.87	36.55	70.41	19.56
20	LAYBARGE	3.06	0.93	7.96	93.49	0.000	0.310	351.18	35.25	33.81	54.57	88.38	24.55
24	STINGER	-7.58	-0.45	6.78	104.22	0.000	0.397	348.88	31.18	33.57	48.27	81.86	22.74
26	STINGER	-16.65	-1.51	6.91	113.35	13.667	0.000	347.77	-57.07	33.40	-88.35	121.83	33.84
29	STINGER	-26.46	-2.87	9.47	123.26	46.756	0.000	345.71	-185.59	33.12	-287.32	320.60	89.05
31	STINGER	-37.17	-5.06	13.54	134.19	44.373	0.000	343.66	-167.79	32.80	-259.77	292.84	81.35
33	STINGER	-40.09	-5.80	14.54	137.21	0.000	0.318	343.36	-96.23	32.73	-148.98	182.03	50.56
35	SAGBEND	-46.07	-7.40	15.31	143.40	0.000	0.000	341.96	-10.90	32.51	-16.88	49.79	13.83
36	SAGBEND	-51.91	-9.00	15.14	149.45	0.000	0.000	340.35	28.35	32.26	43.89	76.64	21.29
37	SAGBEND	-57.76	-10.55	14.53	155.50	0.000	0.000	338.77	47.17	32.02	73.03	105.63	29.34
38	SAGBEND	-63.62	-12.02	13.72	161.55	0.000	0.000	337.27	56.34	31.79	87.23	119.68	33.24
39	SAGBEND	-69.51	-13.41	12.81	167.60	0.000	0.000	335.87	60.91	31.58	94.30	126.61	35.17
40	SAGBEND	-75.42	-14.71	11.84	173.65	0.000	0.000	334.57	63.23	31.38	97.89	130.07	36.13
41	SAGBEND	-81.35	-15.90	10.85	179.70	0.000	0.000	333.38	64.35	31.20	99.63	131.70	36.58
42	SAGBEND	-87.31	-16.98	9.85	185.75	0.000	0.000	332.30	64.68	31.03	100.13	132.09	36.69
43	SAGBEND	-93.27	-17.97	8.85	191.80	0.000	0.000	331.31	64.14	30.88	99.30	131.17	36.43
44	SAGBEND	-99.26	-18.85	7.87	197.85	0.000	0.000	330.44	62.22	30.75	96.33	128.11	35.59
45	SAGBEND	-105.26	-19.62	6.93	203.90	0.000	0.000	329.68	57.65	30.63	89.25	120.95	33.60
46	SAGBEND	-111.27	-20.31	6.11	209.95	0.000	0.000	329.01	47.67	30.53	73.80	105.45	29.29
47	SAGBEND	-117.29	-20.92	5.51	216.00	0.000	0.000	328.44	26.55	30.44	41.11	72.70	20.20
48	SAGBEND	-121.40	-21.31	5.36	220.13	0.000	0.000	328.07	0.00	30.38	0.00	31.60	8.78
49	SAGBEND	-125.38	-21.58	3.93	224.11	0.000	0.000	328.17	0.00	0.00	0.00	0.00	0.00
50	SAGBEND	-129.35	-21.86	3.93	228.10	0.000	0.000	328.17	0.00	0.00	0.00	0.00	0.00
51	SAGBEND	-135.39	-22.27	3.92	234.15	0.000	0.000	328.17	0.00	0.00	0.00	0.00	0.00
52	SAGBEND	-141.42	-22.68	3.92	240.20	0.000	0.000	328.17	0.00	0.00	0.00	0.00	0.00
53	SAGBEND	-147.46	-23.10	3.92	246.25	0.000	0.000	328.17	0.00	0.00	0.00	0.00	0.00
54	SAGBEND	-153.50	-23.51	3.92	252.30	0.000	0.000	328.16	0.00	0.00	0.00	0.00	0.00
55	SAGBEND	-159.53	-23.92	3.91	258.35	0.000	0.000	328.16	0.00	0.00	0.00	0.00	0.00
56	SAGBEND	-165.57	-24.34	3.91	264.40	0.000	0.000	328.16	0.00	0.00	0.00	0.00	0.00
57	SAGBEND	-171.60	-24.75	3.91	270.45	0.000	0.000	328.16	0.00	0.00	0.00	0.00	0.00
58	SAGBEND	-177.64	-25.16	3.91	276.50	0.000	0.000	328.16	0.00	0.00	0.00	0.00	0.00
59	SAGBEND	-183.68	-25.57	3.90	282.55	0.000	0.000	328.16	0.00	0.00	0.00	0.00	0.00
60	SAGBEND	-189.71	-25.98	3.90	288.60	0.000	0.000	328.16	0.00	0.00	0.00	0.00	0.00

S T A T I C P I P E C O O R D I N A T E S, F O R C E S A N D S T R E S S E S

NODE NO.	PIPE SECTION	X COORD (M)	Y COORD (M)	VERT ANGLE (DEG)	PIPE LENGTH (M)	SUPPORT REACTION (KN)	SEPARA -TION (M)	AXIAL TENSION (KN)	BENDING MOMENT (KN-M)	TENSILE STRESS (MPA)	BENDING STRESS (MPA)	TOTAL STRESS (MPA)	PERCNT YIELD (PCT)
61	SAGBEND	-195.75	-26.40	3.90	294.65	0.000	0.000	328.16	0.00	0.00	0.00	0.00	0.00
62	SAGBEND	-201.78	-26.81	3.89	300.70	0.000	0.000	328.16	0.00	0.00	0.00	0.00	0.00
63	SAGBEND	-207.82	-27.22	3.89	306.75	0.000	0.000	328.15	0.00	0.00	0.00	0.00	0.00
64	SAGBEND	-213.86	-27.63	3.89	312.80	0.000	0.000	328.15	0.00	0.00	0.00	0.00	0.00
65	SAGBEND	-219.89	-28.04	3.89	318.85	0.000	0.000	328.15	0.00	0.00	0.00	0.00	0.00
66	SAGBEND	-225.93	-28.45	3.88	324.90	0.000	0.000	328.15	0.00	0.00	0.00	0.00	0.00
67	SAGBEND	-231.96	-28.86	3.88	330.95	0.000	0.000	328.15	0.00	0.00	0.00	0.00	0.00
68	SAGBEND	-238.00	-29.27	3.88	337.00	0.000	0.000	328.15	0.00	0.00	0.00	0.00	0.00
69	SAGBEND	-244.04	-29.68	3.88	343.05	0.000	0.000	328.15	0.00	0.00	0.00	0.00	0.00
70	SAGBEND	-250.07	-30.08	3.87	349.10	0.000	0.000	328.15	0.00	0.00	0.00	0.00	0.00
71	SAGBEND	-256.11	-30.49	3.87	355.15	0.000	0.000	328.15	0.00	0.00	0.00	0.00	0.00
72	SAGBEND	-262.14	-30.90	3.87	361.20	0.000	0.000	328.14	0.00	0.00	0.00	0.00	0.00
73	SAGBEND	-268.18	-31.31	3.86	367.25	0.000	0.000	328.14	0.00	0.00	0.00	0.00	0.00
74	SAGBEND	-274.22	-31.72	3.86	373.30	0.000	0.000	328.14	0.00	0.00	0.00	0.00	0.00
75	SAGBEND	-280.25	-32.12	3.86	379.35	0.000	0.000	328.14	0.00	0.00	0.00	0.00	0.00
76	SAGBEND	-286.29	-32.53	3.86	385.40	0.000	0.000	328.14	0.00	0.00	0.00	0.00	0.00
77	SAGBEND	-292.33	-32.94	3.85	391.45	0.000	0.000	328.14	0.00	0.00	0.00	0.00	0.00
78	SAGBEND	-298.36	-33.34	3.85	397.50	0.000	0.000	328.14	0.00	0.00	0.00	0.00	0.00
79	SAGBEND	-304.40	-33.75	3.85	403.55	0.000	0.000	328.14	0.00	0.00	0.00	0.00	0.00
80	SAGBEND	-310.43	-34.16	3.85	409.60	0.000	0.000	328.14	0.00	0.00	0.00	0.00	0.00
81	SAGBEND	-316.47	-34.56	3.84	415.64	0.000	0.000	328.14	0.00	0.00	0.00	0.00	0.00
82	SAGBEND	-320.94	-34.86	3.84	420.13	0.000	0.000	328.13	0.00	0.00	0.00	0.00	0.00
83	SAGBEND	-324.74	-35.12	3.78	423.94	0.000	0.000	328.11	0.00	0.00	0.00	0.00	0.00
84	SAGBEND	-328.54	-35.36	3.71	427.74	0.000	0.000	328.09	0.00	0.00	0.00	0.00	0.00
85	SAGBEND	-334.58	-35.75	3.62	433.79	0.000	0.000	328.05	0.00	0.00	0.00	0.00	0.00
86	SAGBEND	-340.62	-36.13	3.52	439.84	0.000	0.000	328.02	0.00	0.00	0.00	0.00	0.00
87	SAGBEND	-346.66	-36.49	3.42	445.89	0.000	0.000	327.98	0.00	0.00	0.00	0.00	0.00
88	SAGBEND	-352.70	-36.85	3.32	451.94	0.000	0.000	327.95	0.00	0.00	0.00	0.00	0.00
89	SAGBEND	-358.74	-37.19	3.22	457.99	0.000	0.000	327.91	0.00	0.00	0.00	0.00	0.00
90	SAGBEND	-364.78	-37.53	3.12	464.04	0.000	0.000	327.88	0.00	0.00	0.00	0.00	0.00
91	SAGBEND	-370.82	-37.85	3.02	470.09	0.000	0.000	327.85	0.00	0.00	0.00	0.00	0.00
92	SAGBEND	-376.86	-38.16	2.92	476.14	0.000	0.000	327.82	0.00	0.00	0.00	0.00	0.00
93	SAGBEND	-382.90	-38.47	2.82	482.19	0.000	0.000	327.79	0.00	0.00	0.00	0.00	0.00
94	SAGBEND	-388.95	-38.76	2.72	488.24	0.000	0.000	327.77	0.00	0.00	0.00	0.00	0.00
95	SAGBEND	-394.99	-39.04	2.62	494.29	0.000	0.000	327.74	0.00	0.00	0.00	0.00	0.00
96	SAGBEND	-401.03	-39.31	2.52	500.34	0.000	0.000	327.71	0.00	0.00	0.00	0.00	0.00
97	SAGBEND	-407.08	-39.57	2.42	506.39	0.000	0.000	327.69	0.00	0.00	0.00	0.00	0.00
98	SAGBEND	-413.12	-39.82	2.32	512.44	0.000	0.000	327.67	0.00	0.00	0.00	0.00	0.00
99	SAGBEND	-419.17	-40.06	2.22	518.49	0.000	0.000	327.64	0.00	0.00	0.00	0.00	0.00
100	SAGBEND	-425.21	-40.29	2.12	524.54	0.000	0.000	327.62	0.00	0.00	0.00	0.00	0.00
101	SAGBEND	-431.26	-40.51	2.02	530.59	0.000	0.000	327.60	0.00	0.00	0.00	0.00	0.00
102	SAGBEND	-437.31	-40.72	1.92	536.64	0.000	0.000	327.58	0.00	0.00	0.00	0.00	0.00
103	SAGBEND	-443.35	-40.92	1.82	542.69	0.000	0.000	327.56	0.00	0.00	0.00	0.00	0.00
104	SAGBEND	-449.40	-41.10	1.72	548.74	0.000	0.000	327.55	0.00	0.00	0.00	0.00	0.00
105	SAGBEND	-455.45	-41.28	1.62	554.79	0.000	0.000	327.53	0.00	0.00	0.00	0.00	0.00

S T A T I C P I P E C O O R D I N A T E S, F O R C E S A N D S T R E S S E S

NODE NO.	PIPE SECTION	X COORD (M)	Y COORD (M)	VERT ANGLE (DEG)	PIPE LENGTH (M)	SUPPORT REACTION (KN)	SEPARA -TION (M)	AXIAL TENSION (KN)	BENDING MOMENT (KN-M)	TENSILE STRESS (MPA)	BENDING STRESS (MPA)	TOTAL STRESS (MPA)	PERCNT YIELD (PCT)
106	SAGBEND	-461.50	-41.45	1.52	560.84	0.000	0.000	327.51	0.00	0.00	0.00	0.00	0.00
107	SAGBEND	-467.54	-41.60	1.42	566.89	0.000	0.000	327.50	0.00	0.00	0.00	0.00	0.00
108	SAGBEND	-473.59	-41.75	1.32	572.94	0.000	0.000	327.48	0.00	0.00	0.00	0.00	0.00
109	SAGBEND	-479.64	-41.88	1.22	578.99	0.000	0.000	327.47	0.00	0.00	0.00	0.00	0.00
110	SAGBEND	-485.69	-42.00	1.12	585.04	0.000	0.000	327.46	0.00	0.00	0.00	0.00	0.00
111	SAGBEND	-491.74	-42.12	1.02	591.09	0.000	0.000	327.45	0.00	0.00	0.00	0.00	0.00
112	SAGBEND	-497.79	-42.22	0.92	597.14	0.000	0.000	327.44	0.00	0.00	0.00	0.00	0.00
113	SAGBEND	-503.84	-42.31	0.82	603.19	0.000	0.000	327.43	0.00	0.00	0.00	0.00	0.00
114	SAGBEND	-509.89	-42.39	0.72	609.24	0.000	0.000	327.42	0.00	0.00	0.00	0.00	0.00
115	SAGBEND	-515.93	-42.47	0.62	615.29	0.000	0.000	327.42	0.00	0.00	0.00	0.00	0.00
116	SAGBEND	-521.98	-42.53	0.52	621.34	0.000	0.000	327.41	0.00	0.00	0.00	0.00	0.00
117	SAGBEND	-528.03	-42.58	0.42	627.39	0.000	0.000	327.41	0.00	0.00	0.00	0.00	0.00
118	SAGBEND	-534.08	-42.62	0.32	633.44	0.000	0.000	327.40	0.00	0.00	0.00	0.00	0.00
119	SAGBEND	-540.13	-42.65	0.22	639.49	0.000	0.000	327.40	0.00	0.00	0.00	0.00	0.00
120	SAGBEND	-546.18	-42.66	0.13	645.54	0.002	0.000	327.40	0.00	0.00	0.00	0.00	0.00
121	SEABED	-552.23	-42.67	0.03	651.59	0.226	0.000	327.40	0.00	0.00	0.00	0.00	0.00
122	SEABED	-558.28	-42.67	0.01	657.64	0.502	0.000	327.40	0.00	0.00	0.00	0.00	0.00
123	SEABED	-564.33	-42.67	0.00	663.69	0.559	0.000	327.40	0.00	0.00	0.00	0.00	0.00
124	SEABED	-570.38	-42.67	0.00	669.74	0.569	0.000	327.40	0.00	0.00	0.00	0.00	0.00
125	SEABED	-576.43	-42.67	0.00	675.79	0.570	0.000	327.40	0.00	0.00	0.00	0.00	0.00
126	SEABED	-582.48	-42.67	0.00	681.84	0.571	0.000	327.40	0.00	0.00	0.00	0.00	0.00
127	SEABED	-588.53	-42.67	0.00	687.89	0.571	0.000	327.40	0.00	0.00	0.00	0.00	0.00
128	SEABED	-594.58	-42.67	0.00	693.94	0.571	0.000	327.40	0.00	0.00	0.00	0.00	0.00
129	SEABED	-600.63	-42.67	0.00	699.99	0.571	0.000	327.40	0.00	0.00	0.00	0.00	0.00
130	SEABED	-606.68	-42.67	0.00	706.04	0.571	0.000	327.40	0.00	0.00	0.00	0.00	0.00
131	SEABED	-612.73	-42.67	0.00	712.09	0.571	0.000	327.40	0.00	0.00	0.00	0.00	0.00
132	SEABED	-618.78	-42.67	0.00	718.14	0.571	0.000	327.40	0.00	0.00	0.00	0.00	0.00
133	SEABED	-624.83	-42.67	0.00	724.19	0.571	0.000	327.40	0.00	0.00	0.00	0.00	0.00
134	SEABED	-630.88	-42.67	0.00	730.24	0.571	0.000	327.40	0.00	0.00	0.00	0.00	0.00
135	SEABED	-636.93	-42.67	0.00	736.29	0.571	0.000	327.40	0.00	0.00	0.00	0.00	0.00
136	SEABED	-642.98	-42.67	0.00	742.34	0.571	0.000	327.40	0.00	0.00	0.00	0.00	0.00
137	SEABED	-649.03	-42.67	0.00	748.39	0.571	0.000	327.40	0.00	0.00	0.00	0.00	0.00
138	SEABED	-655.08	-42.67	0.00	754.44	0.571	0.000	327.40	0.00	0.00	0.00	0.00	0.00
139	SEABED	-661.13	-42.67	0.00	760.49	0.571	0.000	327.40	0.00	0.00	0.00	0.00	0.00
140	SEABED	-667.18	-42.67	0.00	766.54	0.571	0.000	327.40	0.00	0.00	0.00	0.00	0.00
141	SEABED	-673.23	-42.67	0.00	772.59	0.571	0.000	327.40	0.00	0.00	0.00	0.00	0.00
142	SEABED	-679.28	-42.67	0.00	778.64	0.571	0.000	327.40	0.00	0.00	0.00	0.00	0.00
143	SEABED	-685.33	-42.67	0.00	784.69	0.571	0.000	327.40	0.00	0.00	0.00	0.00	0.00
144	SEABED	-691.38	-42.67	0.00	790.74	0.571	0.000	327.40	0.00	0.00	0.00	0.00	0.00
145	SEABED	-697.43	-42.67	0.00	796.79	0.570	0.000	327.40	0.00	0.00	0.00	0.00	0.00
146	SEABED	-703.48	-42.67	0.00	802.84	0.566	0.000	327.40	0.00	0.00	0.00	0.00	0.00
147	SEABED	-709.53	-42.67	0.00	808.89	0.544	0.000	327.40	0.00	0.00	0.00	0.00	0.00
148	SEABED	-715.58	-42.67	-0.01	814.94	0.400	0.000	327.40	0.00	0.00	0.00	0.00	0.00
149	SEABED	-720.76	-42.67	-0.06	820.12	0.000	0.000	327.40	0.00	0.00	0.00	0.00	0.00

S T A T I C P I P E C O O R D I N A T E S, F O R C E S A N D S T R E S S E S

NODE NO.	PIPE SECTION	X COORD (M)	Y COORD (M)	VERT ANGLE (DEG)	PIPE LENGTH (M)	SUPPORT REACTION (KN)	SEPARA -TION (M)	AXIAL TENSION (KN)	BENDING MOMENT (KN-M)	TENSILE STRESS (MPA)	BENDING STRESS (MPA)	TOTAL STRESS (MPA)	PERCNT YIELD (PCT)
1	LAYBARGE	96.31	6.41	1.93	0.00	9.949	0.000	0.00	2.75	0.00	4.25	4.25	1.18
3	LAYBARGE	84.28	6.05	1.58	12.04	24.031	0.000	-0.73	-19.03	-0.07	-29.46	29.53	8.20
5	LAYBARGE	73.45	5.73	1.91	22.87	24.779	0.000	-1.40	-30.20	-0.13	-46.75	46.89	13.02
7	TENSIONR	60.11	5.24	2.28	36.23	31.010	0.000	359.82	-21.08	34.65	-32.63	67.28	18.69
9	LAYBARGE	51.10	4.87	2.21	45.24	0.000	0.000	359.11	23.01	34.58	35.62	70.20	19.50
10	LAYBARGE	46.45	4.70	2.03	49.89	13.928	0.000	358.78	5.66	34.55	8.76	43.31	12.03
12	LAYBARGE	35.36	4.31	2.26	60.99	25.987	0.000	357.91	-43.16	34.46	-66.82	101.28	28.13
14	LAYBARGE	23.34	3.62	4.98	73.04	63.261	0.000	355.76	-178.71	34.26	-276.67	310.92	86.37
16	LAYBARGE	19.27	3.21	6.54	77.13	0.000	0.000	355.50	-113.58	34.23	-175.83	210.07	58.35
17	LAYBARGE	8.90	1.76	9.69	87.60	63.388	0.000	352.07	-173.54	33.90	-268.66	302.56	84.05
19	LAYBARGE	4.93	1.03	11.07	91.64	0.000	0.000	351.25	-85.72	33.82	-132.71	166.53	46.26
20	LAYBARGE	3.11	0.66	11.40	93.49	0.000	0.043	350.61	-56.95	33.76	-88.16	121.92	33.87
24	STINGER	-7.57	-1.57	12.03	104.40	0.000	0.064	347.78	-20.10	33.40	-31.12	64.60	17.95
26	STINGER	-16.49	-3.55	13.53	113.54	38.910	0.000	345.39	-135.14	33.06	-209.21	242.46	67.35
29	STINGER	-26.03	-6.08	16.05	123.40	15.323	0.000	343.04	-103.70	32.69	-160.54	193.56	53.77
31	STINGER	-36.45	-9.37	19.31	134.34	53.352	0.000	339.25	-182.46	32.13	-282.47	315.11	87.53
33	STINGER	-39.28	-10.39	20.41	137.35	0.000	0.324	338.72	-107.30	32.03	-166.12	198.70	55.20
35	SAGBEND	-44.93	-12.56	21.30	143.40	0.000	0.000	336.80	-18.46	31.72	-28.58	60.99	16.94
36	SAGBEND	-50.57	-14.76	21.22	149.45	0.000	0.000	334.60	24.03	31.38	37.21	69.40	19.28
37	SAGBEND	-56.22	-16.92	20.66	155.50	0.000	0.000	332.41	44.62	31.05	69.08	101.06	28.07
38	SAGBEND	-61.89	-19.02	19.88	161.55	0.000	0.000	330.29	54.83	30.73	84.89	116.65	32.40
39	SAGBEND	-67.60	-21.03	18.99	167.60	0.000	0.000	328.26	60.10	30.42	93.04	124.61	34.61
40	SAGBEND	-73.33	-22.96	18.03	173.65	0.000	0.000	326.34	63.00	30.12	97.53	128.91	35.81
41	SAGBEND	-79.10	-24.78	17.04	179.70	0.000	0.000	324.51	64.76	29.84	100.25	131.45	36.51
42	SAGBEND	-84.90	-26.50	16.03	185.75	0.000	0.000	322.79	65.95	29.58	102.09	133.13	36.98
43	SAGBEND	-90.73	-28.12	15.00	191.80	0.000	0.000	321.17	66.85	29.33	103.49	134.37	37.32
44	SAGBEND	-96.59	-29.63	13.95	197.85	0.000	0.000	319.66	67.59	29.10	104.63	135.36	37.60
45	SAGBEND	-102.47	-31.04	12.90	203.90	0.000	0.000	318.25	68.22	28.89	105.62	136.21	37.84
46	SAGBEND	-108.38	-32.33	11.84	209.95	0.000	0.000	316.96	68.77	28.69	106.47	136.94	38.04
47	SAGBEND	-114.32	-33.52	10.77	216.00	0.000	0.000	315.77	69.24	28.51	107.19	137.54	38.21
48	SAGBEND	-120.27	-34.59	9.69	222.05	0.000	0.000	314.70	69.59	28.34	107.73	137.98	38.33
49	SAGBEND	-126.24	-35.55	8.61	228.10	0.000	0.000	313.73	69.76	28.19	108.00	138.15	38.38
50	SAGBEND	-132.23	-36.40	7.53	234.15	0.000	0.000	312.89	69.61	28.06	107.77	137.84	38.29
51	SAGBEND	-138.24	-37.14	6.45	240.20	0.000	0.000	312.15	68.86	27.95	106.61	136.61	37.95
52	SAGBEND	-144.25	-37.76	5.40	246.25	0.000	0.000	311.53	66.94	27.86	103.64	133.58	37.11
53	SAGBEND	-150.28	-38.28	4.39	252.30	0.000	0.000	311.03	62.69	27.78	97.05	126.95	35.26
54	SAGBEND	-156.32	-38.69	3.48	258.35	0.000	0.000	310.64	53.72	27.72	83.16	113.03	31.40
55	SAGBEND	-162.36	-39.02	2.77	264.40	0.000	0.000	310.35	35.20	27.67	54.49	84.35	23.43
56	SAGBEND	-168.08	-39.28	2.48	270.13	0.000	0.000	310.12	0.00	27.64	0.00	29.98	8.33
57	SAGBEND	-174.45	-39.38	0.92	276.50	0.000	0.000	310.24	0.00	0.00	0.00	0.00	0.00
58	SAGBEND	-180.50	-39.48	0.92	282.54	0.000	0.000	310.24	0.00	0.00	0.00	0.00	0.00
59	SAGBEND	-186.55	-39.58	0.91	288.59	0.000	0.000	310.24	0.00	0.00	0.00	0.00	0.00
60	SAGBEND	-192.60	-39.67	0.91	294.64	0.000	0.000	310.24	0.00	0.00	0.00	0.00	0.00

S T A T I C P I P E C O O R D I N A T E S, F O R C E S A N D S T R E S S E S

NODE NO.	PIPE SECTION	X COORD (M)	Y COORD (M)	VERT ANGLE (DEG)	PIPE LENGTH (M)	SUPPORT REACTION (KN)	SEPARA -TION (M)	AXIAL TENSION (KN)	BENDING MOMENT (KN-M)	TENSILE STRESS (MPA)	BENDING STRESS (MPA)	TOTAL STRESS (MPA)	PERCNT YIELD (PCT)
61	SAGBEND	-198.65	-39.77	0.91	300.69	0.000	0.000	310.24	0.00	0.00	0.00	0.00	0.00
62	SAGBEND	-204.70	-39.86	0.90	306.74	0.000	0.000	310.24	0.00	0.00	0.00	0.00	0.00
63	SAGBEND	-210.74	-39.96	0.90	312.79	0.000	0.000	310.24	0.00	0.00	0.00	0.00	0.00
64	SAGBEND	-216.79	-40.05	0.90	318.84	0.000	0.000	310.23	0.00	0.00	0.00	0.00	0.00
65	SAGBEND	-222.84	-40.15	0.90	324.89	0.000	0.000	310.23	0.00	0.00	0.00	0.00	0.00
66	SAGBEND	-228.89	-40.24	0.89	330.94	0.000	0.000	310.23	0.00	0.00	0.00	0.00	0.00
67	SAGBEND	-234.94	-40.34	0.89	336.99	0.000	0.000	310.23	0.00	0.00	0.00	0.00	0.00
68	SAGBEND	-240.99	-40.43	0.89	343.04	0.000	0.000	310.23	0.00	0.00	0.00	0.00	0.00
69	SAGBEND	-247.04	-40.52	0.88	349.09	0.000	0.000	310.23	0.00	0.00	0.00	0.00	0.00
70	SAGBEND	-253.09	-40.62	0.88	355.14	0.000	0.000	310.23	0.00	0.00	0.00	0.00	0.00
71	SAGBEND	-259.14	-40.71	0.88	361.19	0.000	0.000	310.23	0.00	0.00	0.00	0.00	0.00
72	SAGBEND	-265.18	-40.80	0.88	367.24	0.000	0.000	310.23	0.00	0.00	0.00	0.00	0.00
73	SAGBEND	-271.23	-40.90	0.87	373.29	0.000	0.000	310.23	0.00	0.00	0.00	0.00	0.00
74	SAGBEND	-277.28	-40.99	0.87	379.34	0.000	0.000	310.23	0.00	0.00	0.00	0.00	0.00
75	SAGBEND	-283.33	-41.08	0.87	385.39	0.000	0.000	310.23	0.00	0.00	0.00	0.00	0.00
76	SAGBEND	-289.38	-41.17	0.86	391.44	0.000	0.000	310.23	0.00	0.00	0.00	0.00	0.00
77	SAGBEND	-295.43	-41.26	0.86	397.49	0.000	0.000	310.23	0.00	0.00	0.00	0.00	0.00
78	SAGBEND	-301.48	-41.35	0.86	403.54	0.000	0.000	310.23	0.00	0.00	0.00	0.00	0.00
79	SAGBEND	-307.53	-41.44	0.86	409.59	0.000	0.000	310.23	0.00	0.00	0.00	0.00	0.00
80	SAGBEND	-313.58	-41.53	0.85	415.64	0.000	0.000	310.23	0.00	0.00	0.00	0.00	0.00
81	SAGBEND	-319.62	-41.62	0.85	421.69	0.000	0.000	310.23	0.00	0.00	0.00	0.00	0.00
82	SAGBEND	-325.67	-41.71	0.85	427.74	0.000	0.000	310.23	0.00	0.00	0.00	0.00	0.00
83	SAGBEND	-331.72	-41.80	0.84	433.78	0.000	0.000	310.23	0.00	0.00	0.00	0.00	0.00
84	SAGBEND	-337.77	-41.89	0.84	439.83	0.000	0.000	310.23	0.00	0.00	0.00	0.00	0.00
85	SAGBEND	-343.82	-41.98	0.84	445.88	0.000	0.000	310.23	0.00	0.00	0.00	0.00	0.00
86	SAGBEND	-349.87	-42.07	0.83	451.93	0.000	0.000	310.23	0.00	0.00	0.00	0.00	0.00
87	SAGBEND	-355.92	-42.16	0.83	457.98	0.000	0.000	310.23	0.00	0.00	0.00	0.00	0.00
88	SAGBEND	-361.97	-42.24	0.83	464.03	0.000	0.000	310.23	0.00	0.00	0.00	0.00	0.00
89	SAGBEND	-368.02	-42.33	0.83	470.08	0.000	0.000	310.23	0.00	0.00	0.00	0.00	0.00
90	SAGBEND	-374.07	-42.41	0.72	476.13	0.000	0.000	310.22	0.00	0.00	0.00	0.00	0.00
91	SAGBEND	-380.11	-42.48	0.62	482.18	0.000	0.000	310.21	0.00	0.00	0.00	0.00	0.00
92	SAGBEND	-386.16	-42.54	0.51	488.23	0.000	0.000	310.21	0.00	0.00	0.00	0.00	0.00
93	SAGBEND	-392.21	-42.59	0.40	494.28	0.000	0.000	310.20	0.00	0.00	0.00	0.00	0.00
94	SAGBEND	-398.26	-42.63	0.30	500.33	0.000	0.000	310.20	0.00	0.00	0.00	0.00	0.00
95	SAGBEND	-404.31	-42.65	0.19	506.38	0.000	0.000	310.20	0.00	0.00	0.00	0.00	0.00
96	SAGBEND	-410.36	-42.67	0.09	512.43	0.038	0.000	310.20	0.00	0.00	0.00	0.00	0.00
97	SEABED	-416.41	-42.67	0.02	518.48	0.379	0.000	310.20	0.00	0.00	0.00	0.00	0.00
98	SEABED	-422.46	-42.67	0.00	524.53	0.539	0.000	310.20	0.00	0.00	0.00	0.00	0.00
99	SEABED	-428.51	-42.67	0.00	530.58	0.565	0.000	310.20	0.00	0.00	0.00	0.00	0.00
100	SEABED	-434.56	-42.67	0.00	536.63	0.570	0.000	310.20	0.00	0.00	0.00	0.00	0.00
101	SEABED	-440.61	-42.67	0.00	542.67	0.571	0.000	310.20	0.00	0.00	0.00	0.00	0.00
102	SEABED	-446.66	-42.67	0.00	548.72	0.571	0.000	310.20	0.00	0.00	0.00	0.00	0.00
103	SEABED	-452.71	-42.67	0.00	554.77	0.571	0.000	310.20	0.00	0.00	0.00	0.00	0.00
104	SEABED	-458.76	-42.67	0.00	560.82	0.571	0.000	310.20	0.00	0.00	0.00	0.00	0.00

S T A T I C P I P E C O O R D I N A T E S, F O R C E S A N D S T R E S S E S

NODE NO.	PIPE SECTION	X COORD (M)	Y COORD (M)	VERT ANGLE (DEG)	PIPE LENGTH (M)	SUPPORT REACTION (KN)	SEPARA -TION (M)	AXIAL TENSION (KN)	BENDING MOMENT (KN-M)	TENSILE STRESS (MPA)	BENDING STRESS (MPA)	TOTAL STRESS (MPA)	PERCNT YIELD (PCT)
105	SEABED	-464.80	-42.67	0.00	566.87	0.571	0.000	310.20	0.00	0.00	0.00	0.00	0.00
106	SEABED	-470.85	-42.67	0.00	572.92	0.571	0.000	310.20	0.00	0.00	0.00	0.00	0.00
107	SEABED	-476.90	-42.67	0.00	578.97	0.571	0.000	310.20	0.00	0.00	0.00	0.00	0.00
108	SEABED	-482.95	-42.67	0.00	585.02	0.571	0.000	310.20	0.00	0.00	0.00	0.00	0.00
109	SEABED	-489.00	-42.67	0.00	591.07	0.571	0.000	310.20	0.00	0.00	0.00	0.00	0.00
110	SEABED	-495.05	-42.67	0.00	597.12	0.571	0.000	310.20	0.00	0.00	0.00	0.00	0.00
111	SEABED	-501.10	-42.67	0.00	603.17	0.571	0.000	310.20	0.00	0.00	0.00	0.00	0.00
112	SEABED	-507.15	-42.67	0.00	609.22	0.571	0.000	310.20	0.00	0.00	0.00	0.00	0.00
113	SEABED	-513.20	-42.67	0.00	615.27	0.571	0.000	310.20	0.00	0.00	0.00	0.00	0.00
114	SEABED	-519.25	-42.67	0.00	621.32	0.571	0.000	310.20	0.00	0.00	0.00	0.00	0.00
115	SEABED	-525.30	-42.67	0.00	627.37	0.571	0.000	310.20	0.00	0.00	0.00	0.00	0.00
116	SEABED	-531.35	-42.67	0.00	633.42	0.571	0.000	310.20	0.00	0.00	0.00	0.00	0.00
117	SEABED	-537.40	-42.67	0.00	639.46	0.571	0.000	310.20	0.00	0.00	0.00	0.00	0.00
118	SEABED	-543.45	-42.67	0.00	645.51	0.571	0.000	310.20	0.00	0.00	0.00	0.00	0.00
119	SEABED	-549.50	-42.67	0.00	651.56	0.571	0.000	310.20	0.00	0.00	0.00	0.00	0.00
120	SEABED	-555.54	-42.67	0.00	657.61	0.571	0.000	310.20	0.00	0.00	0.00	0.00	0.00
121	SEABED	-561.59	-42.67	0.00	663.66	0.571	0.000	310.20	0.00	0.00	0.00	0.00	0.00
122	SEABED	-567.64	-42.67	0.00	669.71	0.571	0.000	310.20	0.00	0.00	0.00	0.00	0.00
123	SEABED	-573.69	-42.67	0.00	675.76	0.571	0.000	310.20	0.00	0.00	0.00	0.00	0.00
124	SEABED	-579.74	-42.67	0.00	681.81	0.571	0.000	310.20	0.00	0.00	0.00	0.00	0.00
125	SEABED	-585.79	-42.67	0.00	687.86	0.571	0.000	310.20	0.00	0.00	0.00	0.00	0.00
126	SEABED	-591.84	-42.67	0.00	693.91	0.571	0.000	310.20	0.00	0.00	0.00	0.00	0.00
127	SEABED	-597.89	-42.67	0.00	699.96	0.571	0.000	310.20	0.00	0.00	0.00	0.00	0.00
128	SEABED	-603.94	-42.67	0.00	706.01	0.571	0.000	310.20	0.00	0.00	0.00	0.00	0.00
129	SEABED	-609.99	-42.67	0.00	712.06	0.571	0.000	310.20	0.00	0.00	0.00	0.00	0.00
130	SEABED	-616.04	-42.67	0.00	718.11	0.571	0.000	310.20	0.00	0.00	0.00	0.00	0.00
131	SEABED	-622.09	-42.67	0.00	724.16	0.571	0.000	310.20	0.00	0.00	0.00	0.00	0.00
132	SEABED	-628.14	-42.67	0.00	730.20	0.571	0.000	310.20	0.00	0.00	0.00	0.00	0.00
133	SEABED	-634.19	-42.67	0.00	736.25	0.571	0.000	310.20	0.00	0.00	0.00	0.00	0.00
134	SEABED	-640.24	-42.67	0.00	742.30	0.571	0.000	310.20	0.00	0.00	0.00	0.00	0.00
135	SEABED	-646.29	-42.67	0.00	748.35	0.571	0.000	310.20	0.00	0.00	0.00	0.00	0.00
136	SEABED	-652.33	-42.67	0.00	754.40	0.571	0.000	310.20	0.00	0.00	0.00	0.00	0.00
137	SEABED	-658.38	-42.67	0.00	760.45	0.571	0.000	310.20	0.00	0.00	0.00	0.00	0.00
138	SEABED	-664.43	-42.67	0.00	766.50	0.571	0.000	310.20	0.00	0.00	0.00	0.00	0.00
139	SEABED	-670.48	-42.67	0.00	772.55	0.571	0.000	310.20	0.00	0.00	0.00	0.00	0.00
140	SEABED	-676.53	-42.67	0.00	778.60	0.571	0.000	310.20	0.00	0.00	0.00	0.00	0.00
141	SEABED	-682.58	-42.67	0.00	784.65	0.571	0.000	310.20	0.00	0.00	0.00	0.00	0.00
142	SEABED	-688.63	-42.67	0.00	790.70	0.571	0.000	310.20	0.00	0.00	0.00	0.00	0.00
143	SEABED	-694.68	-42.67	0.00	796.75	0.571	0.000	310.20	0.00	0.00	0.00	0.00	0.00
144	SEABED	-700.73	-42.67	0.00	802.80	0.571	0.000	310.20	0.00	0.00	0.00	0.00	0.00
145	SEABED	-706.78	-42.67	0.00	808.85	0.571	0.000	310.20	0.00	0.00	0.00	0.00	0.00
146	SEABED	-712.83	-42.67	0.00	814.90	0.571	0.000	310.20	0.00	0.00	0.00	0.00	0.00
147	SEABED	-718.88	-42.67	0.00	820.95	0.571	0.000	310.20	0.00	0.00	0.00	0.00	0.00
148	SEABED	-724.93	-42.67	0.00	826.99	0.571	0.000	310.20	0.00	0.00	0.00	0.00	0.00
149	SEABED	-730.98	-42.67	0.00	833.04	0.571	0.000	310.20	0.00	0.00	0.00	0.00	0.00

S T A T I C P I P E C O O R D I N A T E S, F O R C E S A N D S T R E S S E S

NODE NO.	PIPE SECTION	X COORD (M)	Y COORD (M)	VERT ANGLE (DEG)	PIPE LENGTH (M)	SUPPORT REACTION (KN)	SEPARA -TION (M)	AXIAL TENSION (KN)	BENDING MOMENT (KN-M)	TENSILE STRESS (MPA)	BENDING STRESS (MPA)	TOTAL STRESS (MPA)	PERCNT YIELD (PCT)
150	SEABED	-737.03	-42.67	0.00	839.09	0.571	0.000	310.20	0.00	0.00	0.00	0.00	0.00
151	SEABED	-743.08	-42.67	0.00	845.14	0.570	0.000	310.20	0.00	0.00	0.00	0.00	0.00
152	SEABED	-749.12	-42.67	0.00	851.19	0.568	0.000	310.20	0.00	0.00	0.00	0.00	0.00
153	SEABED	-755.17	-42.67	0.00	857.24	0.555	0.000	310.20	0.00	0.00	0.00	0.00	0.00
154	SEABED	-761.22	-42.67	-0.01	863.29	0.392	0.000	310.20	0.00	0.00	0.00	0.00	0.00
155	SEABED	-764.61	-42.67	-0.02	866.68	0.195	0.000	310.20	0.00	0.00	0.00	0.00	0.00
156	SEABED	-768.00	-42.67	-0.06	870.07	0.000	0.000	310.20	0.00	0.00	0.00	0.00	0.00

S T A T I C P I P E C O O R D I N A T E S, F O R C E S A N D S T R E S S E S

NODE	PIPE	X	Y	VERT	PIPE	SUPPORT	SEPARA	AXIAL	BENDING	TENSILE	BENDING	TOTAL	PERCNT
NO.	SECTION	COORD (M)	COORD (M)	ANGLE (DEG)	LENGTH (M)	REACTION (KN)	-TION (M)	TENSION (KN)	MOMENT (KN-M)	STRESS (MPA)	STRESS (MPA)	STRESS (MPA)	YIELD (PCT)
1	LAYBARGE	96.31	6.41	1.93	0.00	9.950	0.000	0.00	2.75	0.00	4.26	4.26	1.18
3	LAYBARGE	84.28	6.05	1.58	12.04	24.021	0.000	-0.73	-19.02	-0.07	-29.44	29.51	8.20
5	LAYBARGE	73.45	5.73	1.91	22.87	24.811	0.000	-1.40	-30.26	-0.13	-46.85	46.98	13.05
7	TENSIONR	60.11	5.24	2.27	36.23	30.943	0.000	386.42	-20.88	37.21	-32.32	69.53	19.31
9	LAYBARGE	51.10	4.87	2.21	45.24	0.000	0.000	385.71	22.47	37.14	34.78	71.92	19.98
10	LAYBARGE	46.45	4.70	2.03	49.89	14.198	0.000	385.38	5.16	37.11	7.98	45.09	12.53
12	LAYBARGE	35.36	4.31	2.24	60.99	24.506	0.000	384.52	-41.07	37.02	-63.58	100.61	27.95
14	LAYBARGE	23.34	3.62	5.11	73.04	72.515	0.000	382.20	-193.95	36.80	-300.27	337.07	93.63
16	LAYBARGE	19.27	3.19	6.75	77.13	0.000	0.000	382.09	-110.45	36.79	-171.00	207.79	57.72
17	LAYBARGE	8.89	1.76	9.08	87.60	47.577	0.000	379.12	-113.75	36.50	-176.11	212.62	59.06
19	LAYBARGE	4.91	1.09	9.92	91.64	0.000	0.000	378.09	-44.63	36.41	-69.09	105.49	29.30
20	LAYBARGE	3.09	0.77	10.08	93.49	0.000	0.146	377.48	-23.00	36.35	-35.60	71.95	19.99
24	STINGER	-7.63	-1.15	10.10	104.38	0.000	0.200	374.80	-6.34	36.02	-9.81	45.90	12.75
26	STINGER	-16.62	-2.81	11.32	113.52	33.630	0.000	372.80	-123.27	35.74	-190.84	226.73	62.98
29	STINGER	-26.24	-4.98	14.23	123.38	31.625	0.000	370.45	-152.80	35.39	-236.55	272.21	75.61
31	STINGER	-36.74	-8.01	18.12	134.31	53.012	0.000	367.15	-188.02	34.90	-291.08	326.41	90.67
33	STINGER	-39.61	-8.99	19.25	137.35	0.000	0.312	366.71	-109.46	34.80	-169.46	204.74	56.87
35	SAGBEND	-45.30	-11.04	20.16	143.40	0.000	0.000	364.92	-19.43	34.51	-30.08	65.20	18.11
36	SAGBEND	-50.98	-13.13	20.10	149.45	0.000	0.000	362.83	22.30	34.19	34.53	69.44	19.29
37	SAGBEND	-56.67	-15.18	19.58	155.50	0.000	0.000	360.75	41.88	33.88	64.84	99.54	27.65
38	SAGBEND	-62.38	-17.18	18.85	161.55	0.000	0.000	358.74	51.26	33.57	79.36	113.87	31.63
39	SAGBEND	-68.12	-19.09	18.02	167.60	0.000	0.000	356.82	55.93	33.28	86.59	120.91	33.59
40	SAGBEND	-73.89	-20.92	17.13	173.65	0.000	0.000	354.99	58.42	33.00	90.44	124.58	34.61
41	SAGBEND	-79.69	-22.65	16.21	179.70	0.000	0.000	353.25	59.88	32.73	92.70	126.67	35.19
42	SAGBEND	-85.51	-24.29	15.27	185.75	0.000	0.000	351.61	60.85	32.48	94.20	128.01	35.56
43	SAGBEND	-91.36	-25.84	14.33	191.80	0.000	0.000	350.06	61.57	32.24	95.32	128.98	35.83
44	SAGBEND	-97.23	-27.29	13.37	197.85	0.000	0.000	348.61	62.17	32.02	96.24	129.76	36.05
45	SAGBEND	-103.13	-28.64	12.40	203.90	0.000	0.000	347.26	62.68	31.81	97.04	130.43	36.23
46	SAGBEND	-109.05	-29.89	11.42	209.95	0.000	0.000	346.02	63.13	31.62	97.73	131.00	36.39
47	SAGBEND	-114.99	-31.03	10.44	216.00	0.000	0.000	344.87	63.51	31.45	98.33	131.48	36.52
48	SAGBEND	-120.95	-32.08	9.45	222.05	0.000	0.000	343.82	63.81	31.29	98.79	131.84	36.62
49	SAGBEND	-126.92	-33.02	8.46	228.10	0.000	0.000	342.88	63.97	31.14	99.03	132.00	36.67
50	SAGBEND	-132.92	-33.86	7.47	234.15	0.000	0.000	342.05	63.87	31.02	98.88	131.77	36.60
51	SAGBEND	-138.92	-34.59	6.48	240.20	0.000	0.000	341.31	63.28	30.90	97.97	130.79	36.33
52	SAGBEND	-144.94	-35.22	5.51	246.25	0.000	0.000	340.69	61.70	30.81	95.52	128.27	35.63
53	SAGBEND	-150.96	-35.76	4.58	252.30	0.000	0.000	340.17	58.06	30.73	89.88	122.59	34.05
54	SAGBEND	-157.00	-36.19	3.73	258.35	0.000	0.000	339.75	50.12	30.66	77.60	110.27	30.63
55	SAGBEND	-163.04	-36.55	3.07	264.40	0.000	0.000	339.42	33.20	30.61	51.39	84.05	23.35
56	SAGBEND	-168.76	-36.84	2.80	270.13	0.000	0.000	339.16	0.00	30.57	0.00	32.74	9.09
57	SAGBEND	-175.13	-37.00	1.43	276.50	0.000	0.000	339.26	0.00	0.00	0.00	0.00	0.00
58	SAGBEND	-181.18	-37.15	1.43	282.55	0.000	0.000	339.26	0.00	0.00	0.00	0.00	0.00
59	SAGBEND	-187.22	-37.30	1.42	288.59	0.000	0.000	339.25	0.00	0.00	0.00	0.00	0.00
60	SAGBEND	-193.27	-37.45	1.42	294.64	0.000	0.000	339.25	0.00	0.00	0.00	0.00	0.00

S T A T I C P I P E C O O R D I N A T E S, F O R C E S A N D S T R E S S E S

NODE NO.	PIPE SECTION	X COORD (M)	Y COORD (M)	VERT ANGLE (DEG)	PIPE LENGTH (M)	SUPPORT REACTION (KN)	SEPARA -TION (M)	AXIAL TENSION (KN)	BENDING MOMENT (KN-M)	TENSILE STRESS (MPA)	BENDING STRESS (MPA)	TOTAL STRESS (MPA)	PERCNT YIELD (PCT)
61	SAGBEND	-199.32	-37.60	1.42	300.69	0.000	0.000	339.25	0.00	0.00	0.00	0.00	0.00
62	SAGBEND	-205.37	-37.75	1.42	306.74	0.000	0.000	339.25	0.00	0.00	0.00	0.00	0.00
63	SAGBEND	-211.42	-37.90	1.41	312.79	0.000	0.000	339.25	0.00	0.00	0.00	0.00	0.00
64	SAGBEND	-217.46	-38.05	1.41	318.84	0.000	0.000	339.25	0.00	0.00	0.00	0.00	0.00
65	SAGBEND	-223.51	-38.20	1.41	324.89	0.000	0.000	339.25	0.00	0.00	0.00	0.00	0.00
66	SAGBEND	-229.56	-38.34	1.41	330.94	0.000	0.000	339.25	0.00	0.00	0.00	0.00	0.00
67	SAGBEND	-235.61	-38.49	1.40	336.99	0.000	0.000	339.25	0.00	0.00	0.00	0.00	0.00
68	SAGBEND	-241.65	-38.64	1.40	343.04	0.000	0.000	339.25	0.00	0.00	0.00	0.00	0.00
69	SAGBEND	-247.70	-38.79	1.40	349.09	0.000	0.000	339.25	0.00	0.00	0.00	0.00	0.00
70	SAGBEND	-253.75	-38.94	1.39	355.14	0.000	0.000	339.25	0.00	0.00	0.00	0.00	0.00
71	SAGBEND	-259.80	-39.08	1.39	361.19	0.000	0.000	339.25	0.00	0.00	0.00	0.00	0.00
72	SAGBEND	-265.85	-39.23	1.39	367.24	0.000	0.000	339.25	0.00	0.00	0.00	0.00	0.00
73	SAGBEND	-271.89	-39.38	1.39	373.29	0.000	0.000	339.25	0.00	0.00	0.00	0.00	0.00
74	SAGBEND	-277.94	-39.52	1.38	379.34	0.000	0.000	339.25	0.00	0.00	0.00	0.00	0.00
75	SAGBEND	-283.99	-39.67	1.38	385.39	0.000	0.000	339.25	0.00	0.00	0.00	0.00	0.00
76	SAGBEND	-290.04	-39.81	1.38	391.44	0.000	0.000	339.25	0.00	0.00	0.00	0.00	0.00
77	SAGBEND	-296.09	-39.96	1.38	397.49	0.000	0.000	339.25	0.00	0.00	0.00	0.00	0.00
78	SAGBEND	-302.13	-40.10	1.37	403.54	0.000	0.000	339.25	0.00	0.00	0.00	0.00	0.00
79	SAGBEND	-308.18	-40.25	1.37	409.59	0.000	0.000	339.25	0.00	0.00	0.00	0.00	0.00
80	SAGBEND	-314.23	-40.39	1.37	415.64	0.000	0.000	339.25	0.00	0.00	0.00	0.00	0.00
81	SAGBEND	-320.28	-40.54	1.37	421.69	0.000	0.000	339.25	0.00	0.00	0.00	0.00	0.00
82	SAGBEND	-326.33	-40.68	1.36	427.74	0.000	0.000	339.25	0.00	0.00	0.00	0.00	0.00
83	SAGBEND	-332.37	-40.83	1.36	433.79	0.000	0.000	339.25	0.00	0.00	0.00	0.00	0.00
84	SAGBEND	-338.42	-40.97	1.36	439.84	0.000	0.000	339.25	0.00	0.00	0.00	0.00	0.00

85	SAGBEND	-344.47	-41.11	1.35	445.89	0.000	0.000	339.24	0.00	0.00	0.00	0.00	0.00
86	SAGBEND	-350.52	-41.26	1.35	451.94	0.000	0.000	339.24	0.00	0.00	0.00	0.00	0.00
87	SAGBEND	-356.57	-41.40	1.35	457.99	0.000	0.000	339.24	0.00	0.00	0.00	0.00	0.00
88	SAGBEND	-362.61	-41.54	1.35	464.04	0.000	0.000	339.24	0.00	0.00	0.00	0.00	0.00
89	SAGBEND	-368.66	-41.68	1.34	470.09	0.000	0.000	339.24	0.00	0.00	0.00	0.00	0.00
90	SAGBEND	-374.71	-41.82	1.25	476.13	0.000	0.000	339.23	0.00	0.00	0.00	0.00	0.00
91	SAGBEND	-380.76	-41.95	1.15	482.18	0.000	0.000	339.22	0.00	0.00	0.00	0.00	0.00
92	SAGBEND	-386.81	-42.06	1.05	488.23	0.000	0.000	339.21	0.00	0.00	0.00	0.00	0.00
93	SAGBEND	-392.85	-42.17	0.96	494.28	0.000	0.000	339.20	0.00	0.00	0.00	0.00	0.00
94	SAGBEND	-398.90	-42.26	0.86	500.33	0.000	0.000	339.19	0.00	0.00	0.00	0.00	0.00
95	SAGBEND	-404.95	-42.35	0.77	506.38	0.000	0.000	339.18	0.00	0.00	0.00	0.00	0.00
96	SAGBEND	-411.00	-42.43	0.67	512.43	0.000	0.000	339.17	0.00	0.00	0.00	0.00	0.00
97	SAGBEND	-417.05	-42.49	0.57	518.48	0.000	0.000	339.17	0.00	0.00	0.00	0.00	0.00
98	SAGBEND	-423.10	-42.55	0.48	524.53	0.000	0.000	339.16	0.00	0.00	0.00	0.00	0.00
99	SAGBEND	-429.15	-42.59	0.38	530.58	0.000	0.000	339.16	0.00	0.00	0.00	0.00	0.00
100	SAGBEND	-435.20	-42.63	0.28	536.63	0.000	0.000	339.15	0.00	0.00	0.00	0.00	0.00
101	SAGBEND	-441.25	-42.65	0.19	542.68	0.000	0.000	339.15	0.00	0.00	0.00	0.00	0.00
102	SAGBEND	-447.30	-42.67	0.09	548.73	0.024	0.000	339.15	0.00	0.00	0.00	0.00	0.00
103	SEABED	-453.35	-42.67	0.02	554.78	0.344	0.000	339.15	0.00	0.00	0.00	0.00	0.00
104	SEABED	-459.40	-42.67	0.00	560.83	0.529	0.000	339.15	0.00	0.00	0.00	0.00	0.00

S T A T I C P I P E C O O R D I N A T E S, F O R C E S A N D S T R E S S E S

NODE NO.	PIPE SECTION	X COORD (M)	Y COORD (M)	VERT ANGLE (DEG)	PIPE LENGTH (M)	SUPPORT REACTION (KN)	SEPARA -TION (M)	AXIAL TENSION (KN)	BENDING MOMENT (KN-M)	TENSILE STRESS (MPA)	BENDING STRESS (MPA)	TOTAL STRESS (MPA)	PERCNT YIELD (PCT)
105	SEABED	-465.45	-42.67	0.00	566.88	0.563	0.000	339.15	0.00	0.00	0.00	0.00	0.00
106	SEABED	-471.49	-42.67	0.00	572.93	0.569	0.000	339.15	0.00	0.00	0.00	0.00	0.00
107	SEABED	-477.54	-42.67	0.00	578.98	0.570	0.000	339.15	0.00	0.00	0.00	0.00	0.00
108	SEABED	-483.59	-42.67	0.00	585.03	0.571	0.000	339.15	0.00	0.00	0.00	0.00	0.00
109	SEABED	-489.64	-42.67	0.00	591.07	0.571	0.000	339.15	0.00	0.00	0.00	0.00	0.00
110	SEABED	-495.69	-42.67	0.00	597.12	0.571	0.000	339.15	0.00	0.00	0.00	0.00	0.00
111	SEABED	-501.74	-42.67	0.00	603.17	0.571	0.000	339.15	0.00	0.00	0.00	0.00	0.00
112	SEABED	-507.79	-42.67	0.00	609.22	0.571	0.000	339.15	0.00	0.00	0.00	0.00	0.00
113	SEABED	-513.84	-42.67	0.00	615.27	0.571	0.000	339.15	0.00	0.00	0.00	0.00	0.00
114	SEABED	-519.89	-42.67	0.00	621.32	0.571	0.000	339.15	0.00	0.00	0.00	0.00	0.00
115	SEABED	-525.94	-42.67	0.00	627.37	0.571	0.000	339.15	0.00	0.00	0.00	0.00	0.00
116	SEABED	-531.99	-42.67	0.00	633.42	0.571	0.000	339.15	0.00	0.00	0.00	0.00	0.00
117	SEABED	-538.04	-42.67	0.00	639.47	0.571	0.000	339.15	0.00	0.00	0.00	0.00	0.00
118	SEABED	-544.09	-42.67	0.00	645.52	0.571	0.000	339.15	0.00	0.00	0.00	0.00	0.00
119	SEABED	-550.14	-42.67	0.00	651.57	0.571	0.000	339.15	0.00	0.00	0.00	0.00	0.00
120	SEABED	-556.19	-42.67	0.00	657.62	0.571	0.000	339.15	0.00	0.00	0.00	0.00	0.00
121	SEABED	-562.24	-42.67	0.00	663.67	0.571	0.000	339.15	0.00	0.00	0.00	0.00	0.00
122	SEABED	-568.29	-42.67	0.00	669.72	0.571	0.000	339.15	0.00	0.00	0.00	0.00	0.00
123	SEABED	-574.34	-42.67	0.00	675.77	0.571	0.000	339.15	0.00	0.00	0.00	0.00	0.00
124	SEABED	-580.39	-42.67	0.00	681.82	0.571	0.000	339.15	0.00	0.00	0.00	0.00	0.00
125	SEABED	-586.43	-42.67	0.00	687.87	0.571	0.000	339.15	0.00	0.00	0.00	0.00	0.00
126	SEABED	-592.48	-42.67	0.00	693.92	0.571	0.000	339.15	0.00	0.00	0.00	0.00	0.00
127	SEABED	-598.53	-42.67	0.00	699.97	0.571	0.000	339.15	0.00	0.00	0.00	0.00	0.00
128	SEABED	-604.58	-42.67	0.00	706.02	0.571	0.000	339.15	0.00	0.00	0.00	0.00	0.00
129	SEABED	-610.63	-42.67	0.00	712.06	0.571	0.000	339.15	0.00	0.00	0.00	0.00	0.00
130	SEABED	-616.68	-42.67	0.00	718.11	0.571	0.000	339.15	0.00	0.00	0.00	0.00	0.00
131	SEABED	-622.73	-42.67	0.00	724.16	0.571	0.000	339.15	0.00	0.00	0.00	0.00	0.00
132	SEABED	-628.78	-42.67	0.00	730.21	0.571	0.000	339.15	0.00	0.00	0.00	0.00	0.00
133	SEABED	-634.83	-42.67	0.00	736.26	0.571	0.000	339.15	0.00	0.00	0.00	0.00	0.00
134	SEABED	-640.88	-42.67	0.00	742.31	0.571	0.000	339.15	0.00	0.00	0.00	0.00	0.00
135	SEABED	-646.93	-42.67	0.00	748.36	0.571	0.000	339.15	0.00	0.00	0.00	0.00	0.00
136	SEABED	-652.98	-42.67	0.00	754.41	0.571	0.000	339.15	0.00	0.00	0.00	0.00	0.00
137	SEABED	-659.03	-42.67	0.00	760.46	0.571	0.000	339.15	0.00	0.00	0.00	0.00	0.00
138	SEABED	-665.08	-42.67	0.00	766.51	0.571	0.000	339.15	0.00	0.00	0.00	0.00	0.00
139	SEABED	-671.13	-42.67	0.00	772.56	0.571	0.000	339.15	0.00	0.00	0.00	0.00	0.00
140	SEABED	-677.18	-42.67	0.00	778.61	0.571	0.000	339.15	0.00	0.00	0.00	0.00	0.00
141	SEABED	-683.23	-42.67	0.00	784.66	0.571	0.000	339.15	0.00	0.00	0.00	0.00	0.00
142	SEABED	-689.28	-42.67	0.00	790.71	0.571	0.000	339.15	0.00	0.00	0.00	0.00	0.00
143	SEABED	-695.33	-42.67	0.00	796.76	0.571	0.000	339.15	0.00	0.00	0.00	0.00	0.00
144	SEABED	-701.38	-42.67	0.00	802.81	0.571	0.000	339.15	0.00	0.00	0.00	0.00	0.00
145	SEABED	-707.42	-42.67	0.00	808.86	0.571	0.000	339.15	0.00	0.00	0.00	0.00	0.00
146	SEABED	-713.47	-42.67	0.00	814.91	0.571	0.000	339.15	0.00	0.00	0.00	0.00	0.00
147	SEABED	-719.52	-42.67	0.00	820.96	0.571	0.000	339.15	0.00	0.00	0.00	0.00	0.00
148	SEABED	-725.57	-42.67	0.00	827.00	0.571	0.000	339.15	0.00	0.00	0.00	0.00	0.00
149	SEABED	-731.62	-42.67	0.00	833.05	0.571	0.000	339.15	0.00	0.00	0.00	0.00	0.00

S T A T I C P I P E C O O R D I N A T E S, F O R C E S A N D S T R E S S E S

NODE NO.	PIPE SECTION	X COORD (M)	Y COORD (M)	VERT ANGLE (DEG)	PIPE LENGTH (M)	SUPPORT REACTION (KN)	SEPARA -TION (M)	AXIAL TENSION (KN)	BENDING MOMENT (KN-M)	TENSILE STRESS (MPA)	BENDING STRESS (MPA)	TOTAL STRESS (MPA)	PERCNT YIELD (PCT)
150	SEABED	-737.67	-42.67	0.00	839.10	0.571	0.000	339.15	0.00	0.00	0.00	0.00	0.00
151	SEABED	-743.72	-42.67	0.00	845.15	0.570	0.000	339.15	0.00	0.00	0.00	0.00	0.00
152	SEABED	-749.77	-42.67	0.00	851.20	0.567	0.000	339.15	0.00	0.00	0.00	0.00	0.00
153	SEABED	-755.82	-42.67	0.00	857.25	0.553	0.000	339.15	0.00	0.00	0.00	0.00	0.00
154	SEABED	-761.87	-42.67	-0.01	863.30	0.387	0.000	339.15	0.00	0.00	0.00	0.00	0.00
155	SEABED	-765.26	-42.67	-0.02	866.69	0.190	0.000	339.15	0.00	0.00	0.00	0.00	0.00
156	SEABED	-768.65	-42.67	-0.06	870.08	0.000	0.000	339.15	0.00	0.00	0.00	0.00	0.00

S T A T I C P I P E C O O R D I N A T E S, F O R C E S A N D S T R E S S E S

NODE NO.	PIPE SECTION	X COORD (M)	Y COORD (M)	VERT ANGLE (DEG)	PIPE LENGTH (M)	SUPPORT REACTION (KN)	SEPARA -TION (M)	AXIAL TENSION (KN)	BENDING MOMENT (KN-M)	TENSILE STRESS (MPA)	BENDING STRESS (MPA)	TOTAL STRESS (MPA)	PERCNT YIELD (PCT)
1	LAYBARGE	96.31	6.41	1.93	0.00	9.950	0.000	0.00	2.75	0.00	4.26	4.26	1.18
3	LAYBARGE	84.28	6.05	1.58	12.04	24.024	0.000	-0.73	-19.02	-0.07	-29.45	29.52	8.20
5	LAYBARGE	73.45	5.73	1.91	22.87	24.801	0.000	-1.40	-30.24	-0.13	-46.82	46.95	13.04
7	TENSIONR	60.11	5.24	2.27	36.23	30.978	0.000	386.42	-20.93	37.21	-32.41	69.61	19.34
9	LAYBARGE	51.10	4.87	2.21	45.24	0.000	0.000	385.71	22.63	37.14	35.04	72.18	20.05
10	LAYBARGE	46.45	4.70	2.03	49.89	13.981	0.000	385.38	5.46	37.11	8.46	45.56	12.66
12	LAYBARGE	35.36	4.31	2.25	60.99	25.415	0.000	384.52	-42.08	37.02	-65.14	102.17	28.38
14	LAYBARGE	23.34	3.62	5.06	73.04	69.269	0.000	382.27	-187.80	36.81	-290.74	327.55	90.99
16	LAYBARGE	19.27	3.20	6.66	77.13	0.000	0.000	382.10	-111.59	36.79	-172.76	209.55	58.21
17	LAYBARGE	8.90	1.76	9.35	87.60	55.484	0.000	378.94	-141.23	36.49	-218.65	255.14	70.87
19	LAYBARGE	4.92	1.06	10.44	91.64	0.000	0.000	377.99	-63.28	36.40	-97.97	134.37	37.32
20	LAYBARGE	3.10	0.72	10.67	93.49	0.000	0.100	377.36	-38.47	36.34	-59.56	95.90	26.64
24	STINGER	-7.58	-1.33	11.00	104.36	0.000	0.142	374.62	-14.48	36.00	-22.42	58.49	16.25
26	STINGER	-16.54	-3.15	12.44	113.51	38.066	0.000	372.38	-136.31	35.68	-211.03	246.88	68.58
29	STINGER	-26.13	-5.52	15.33	123.38	26.014	0.000	370.01	-138.11	35.31	-213.82	249.43	69.29
31	STINGER	-36.57	-8.74	19.07	134.31	54.580	0.000	366.41	-190.50	34.79	-294.92	330.18	91.72
33	STINGER	-39.43	-9.76	20.23	137.35	0.000	0.314	365.93	-111.30	34.68	-172.31	207.52	57.64
35	SAGBEND	-45.08	-11.91	21.16	143.40	0.000	0.000	364.05	-20.47	34.38	-31.70	66.73	18.54
36	SAGBEND	-50.73	-14.09	21.11	149.45	0.000	0.000	361.87	21.67	34.05	33.55	68.37	18.99
37	SAGBEND	-56.38	-16.25	20.60	155.50	0.000	0.000	359.69	41.47	33.71	64.21	98.81	27.45
38	SAGBEND	-62.05	-18.34	19.87	161.55	0.000	0.000	357.58	50.98	33.39	78.93	113.32	31.48
39	SAGBEND	-67.76	-20.36	19.04	167.60	0.000	0.000	355.55	55.74	33.08	86.29	120.49	33.47
40	SAGBEND	-73.49	-22.29	18.16	173.65	0.000	0.000	353.62	58.28	32.79	90.23	124.24	34.51
41	SAGBEND	-79.26	-24.13	17.24	179.70	0.000	0.000	351.78	59.79	32.50	92.57	126.40	35.11
42	SAGBEND	-85.05	-25.87	16.30	185.75	0.000	0.000	350.03	60.81	32.24	94.14	127.80	35.50
43	SAGBEND	-90.87	-27.52	15.35	191.80	0.000	0.000	348.38	61.58	31.99	95.33	128.83	35.78
44	SAGBEND	-96.72	-29.08	14.39	197.85	0.000	0.000	346.83	62.21	31.75	96.32	129.67	36.02
45	SAGBEND	-102.59	-30.53	13.43	203.90	0.000	0.000	345.37	62.78	31.53	97.19	130.39	36.22
46	SAGBEND	-108.48	-31.89	12.45	209.95	0.000	0.000	344.02	63.28	31.32	97.97	131.05	36.40
47	SAGBEND	-114.40	-33.14	11.46	216.00	0.000	0.000	342.76	63.74	31.13	98.68	131.63	36.56
48	SAGBEND	-120.34	-34.29	10.47	222.05	0.000	0.000	341.61	64.14	30.95	99.30	132.15	36.71
49	SAGBEND	-126.30	-35.34	9.47	228.10	0.000	0.000	340.57	64.48	30.79	99.83	132.57	36.82
50	SAGBEND	-132.28	-36.28	8.47	234.15	0.000	0.000	339.62	64.71	30.65	100.19	132.84	36.90
51	SAGBEND	-138.27	-37.12	7.47	240.20	0.000	0.000	338.79	64.77	30.52	100.28	132.85	36.90
52	SAGBEND	-144.27	-37.85	6.46	246.25	0.000	0.000	338.05	64.51	30.41	99.87	132.37	36.77
53	SAGBEND	-150.29	-38.48	5.47	252.30	0.000	0.000	337.43	63.61	30.31	98.47	130.91	36.36
54	SAGBEND	-156.32	-39.01	4.50	258.35	0.000	0.000	336.91	61.40	30.23	95.05	127.44	35.40
55	SAGBEND	-162.35	-39.43	3.58	264.40	0.000	0.000	336.50	56.50	30.17	87.47	119.83	33.29
56	SAGBEND	-168.39	-39.77	2.77	270.45	0.000	0.000	336.19	46.01	30.12	71.23	103.56	28.77
57	SAGBEND	-174.44	-40.03	2.21	276.50	0.000	0.000	335.96	23.82	30.08	36.87	69.22	19.23
58	SAGBEND	-178.07	-40.16	2.09	280.13	0.000	0.000	335.84	0.00	30.06	0.00	32.45	9.01
59	SAGBEND	-182.30	-40.21	0.70	284.36	0.000	0.000	335.94	0.00	0.00	0.00	0.00	0.00
60	SAGBEND	-186.53	-40.27	0.70	288.59	0.000	0.000	335.94	0.00	0.00	0.00	0.00	0.00

S T A T I C P I P E C O O R D I N A T E S, F O R C E S A N D S T R E S S E S

NODE NO.	PIPE SECTION	X COORD	Y COORD	VERT ANGLE	PIPE LENGTH	SUPPORT REACTION	SEPARA -TION	AXIAL TENSION	BENDING MOMENT	TENSILE STRESS	BENDING STRESS	TOTAL STRESS	PERCNT YIELD

		(M)	(M)	(DEG)	(M)	(KN)	(M)	(KN)	(KN-M)	(MPA)	(MPA)	(MPA)	(PCT)
61	SAGBEND	-192.58	-40.34	0.70	294.64	0.000	0.000	335.94	0.00	0.00	0.00	0.00	0.00
62	SAGBEND	-198.63	-40.41	0.70	300.69	0.000	0.000	335.94	0.00	0.00	0.00	0.00	0.00
63	SAGBEND	-204.68	-40.49	0.69	306.74	0.000	0.000	335.94	0.00	0.00	0.00	0.00	0.00
64	SAGBEND	-210.73	-40.56	0.69	312.79	0.000	0.000	335.94	0.00	0.00	0.00	0.00	0.00
65	SAGBEND	-216.78	-40.63	0.69	318.84	0.000	0.000	335.94	0.00	0.00	0.00	0.00	0.00
66	SAGBEND	-222.83	-40.71	0.68	324.89	0.000	0.000	335.94	0.00	0.00	0.00	0.00	0.00
67	SAGBEND	-228.88	-40.78	0.68	330.94	0.000	0.000	335.94	0.00	0.00	0.00	0.00	0.00
68	SAGBEND	-234.93	-40.85	0.68	336.99	0.000	0.000	335.94	0.00	0.00	0.00	0.00	0.00
69	SAGBEND	-240.98	-40.92	0.68	343.04	0.000	0.000	335.94	0.00	0.00	0.00	0.00	0.00
70	SAGBEND	-247.03	-40.99	0.67	349.09	0.000	0.000	335.94	0.00	0.00	0.00	0.00	0.00
71	SAGBEND	-253.08	-41.06	0.67	355.14	0.000	0.000	335.94	0.00	0.00	0.00	0.00	0.00
72	SAGBEND	-259.12	-41.13	0.67	361.19	0.000	0.000	335.94	0.00	0.00	0.00	0.00	0.00
73	SAGBEND	-265.17	-41.20	0.67	367.24	0.000	0.000	335.94	0.00	0.00	0.00	0.00	0.00
74	SAGBEND	-271.22	-41.27	0.66	373.29	0.000	0.000	335.94	0.00	0.00	0.00	0.00	0.00
75	SAGBEND	-277.27	-41.34	0.66	379.34	0.000	0.000	335.94	0.00	0.00	0.00	0.00	0.00
76	SAGBEND	-283.32	-41.41	0.66	385.39	0.000	0.000	335.94	0.00	0.00	0.00	0.00	0.00
77	SAGBEND	-289.37	-41.48	0.65	391.44	0.000	0.000	335.94	0.00	0.00	0.00	0.00	0.00
78	SAGBEND	-295.42	-41.55	0.65	397.49	0.000	0.000	335.94	0.00	0.00	0.00	0.00	0.00
79	SAGBEND	-301.47	-41.62	0.65	403.54	0.000	0.000	335.94	0.00	0.00	0.00	0.00	0.00
80	SAGBEND	-307.52	-41.69	0.65	409.59	0.000	0.000	335.94	0.00	0.00	0.00	0.00	0.00
81	SAGBEND	-313.57	-41.76	0.64	415.64	0.000	0.000	335.94	0.00	0.00	0.00	0.00	0.00
82	SAGBEND	-319.62	-41.83	0.64	421.69	0.000	0.000	335.94	0.00	0.00	0.00	0.00	0.00
83	SAGBEND	-325.67	-41.89	0.64	427.74	0.000	0.000	335.93	0.00	0.00	0.00	0.00	0.00
84	SAGBEND	-331.72	-41.96	0.64	433.79	0.000	0.000	335.93	0.00	0.00	0.00	0.00	0.00
85	SAGBEND	-337.76	-42.03	0.63	439.84	0.000	0.000	335.93	0.00	0.00	0.00	0.00	0.00
86	SAGBEND	-343.81	-42.09	0.63	445.88	0.000	0.000	335.93	0.00	0.00	0.00	0.00	0.00
87	SAGBEND	-349.86	-42.16	0.63	451.93	0.000	0.000	335.93	0.00	0.00	0.00	0.00	0.00
88	SAGBEND	-355.91	-42.23	0.63	457.98	0.000	0.000	335.93	0.00	0.00	0.00	0.00	0.00
89	SAGBEND	-361.96	-42.29	0.62	464.03	0.000	0.000	335.93	0.00	0.00	0.00	0.00	0.00
90	SAGBEND	-368.01	-42.36	0.62	470.08	0.000	0.000	335.93	0.00	0.00	0.00	0.00	0.00
91	SAGBEND	-374.06	-42.42	0.62	476.13	0.000	0.000	335.93	0.00	0.00	0.00	0.00	0.00
92	SAGBEND	-378.04	-42.47	0.62	480.11	0.000	0.000	335.93	0.00	0.00	0.00	0.00	0.00
93	SAGBEND	-382.10	-42.51	0.55	484.17	0.000	0.000	335.93	0.00	0.00	0.00	0.00	0.00
94	SAGBEND	-386.16	-42.54	0.48	488.23	0.000	0.000	335.93	0.00	0.00	0.00	0.00	0.00
95	SAGBEND	-392.21	-42.59	0.39	494.28	0.000	0.000	335.92	0.00	0.00	0.00	0.00	0.00
96	SAGBEND	-398.26	-42.63	0.29	500.33	0.000	0.000	335.92	0.00	0.00	0.00	0.00	0.00
97	SAGBEND	-404.31	-42.65	0.19	506.38	0.000	0.000	335.92	0.00	0.00	0.00	0.00	0.00
98	SAGBEND	-410.36	-42.67	0.10	512.43	0.019	0.000	335.91	0.00	0.00	0.00	0.00	0.00
99	SEABED	-416.40	-42.67	0.02	518.48	0.330	0.000	335.91	0.00	0.00	0.00	0.00	0.00
100	SEABED	-422.45	-42.67	0.00	524.53	0.527	0.000	335.91	0.00	0.00	0.00	0.00	0.00
101	SEABED	-428.50	-42.67	0.00	530.58	0.563	0.000	335.91	0.00	0.00	0.00	0.00	0.00
102	SEABED	-434.55	-42.67	0.00	536.63	0.569	0.000	335.91	0.00	0.00	0.00	0.00	0.00
103	SEABED	-440.60	-42.67	0.00	542.68	0.570	0.000	335.91	0.00	0.00	0.00	0.00	0.00
104	SEABED	-446.65	-42.67	0.00	548.73	0.571	0.000	335.91	0.00	0.00	0.00	0.00	0.00

S T A T I C P I P E C O O R D I N A T E S, F O R C E S A N D S T R E S S E S

NODE NO.	PIPE SECTION	X COORD (M)	Y COORD (M)	VERT ANGLE (DEG)	PIPE LENGTH (M)	SUPPORT REACTION (KN)	SEPARA -TION (M)	AXIAL TENSION (KN)	BENDING MOMENT (KN-M)	TENSILE STRESS (MPA)	BENDING STRESS (MPA)	TOTAL STRESS (MPA)	PERCNT YIELD (PCT)
105	SEABED	-452.70	-42.67	0.00	554.77	0.571	0.000	335.91	0.00	0.00	0.00	0.00	0.00
106	SEABED	-458.75	-42.67	0.00	560.82	0.571	0.000	335.91	0.00	0.00	0.00	0.00	0.00
107	SEABED	-464.80	-42.67	0.00	566.87	0.571	0.000	335.91	0.00	0.00	0.00	0.00	0.00
108	SEABED	-470.85	-42.67	0.00	572.92	0.571	0.000	335.91	0.00	0.00	0.00	0.00	0.00
109	SEABED	-476.90	-42.67	0.00	578.97	0.571	0.000	335.91	0.00	0.00	0.00	0.00	0.00
110	SEABED	-482.95	-42.67	0.00	585.02	0.571	0.000	335.91	0.00	0.00	0.00	0.00	0.00
111	SEABED	-489.00	-42.67	0.00	591.07	0.571	0.000	335.91	0.00	0.00	0.00	0.00	0.00
112	SEABED	-495.05	-42.67	0.00	597.12	0.571	0.000	335.91	0.00	0.00	0.00	0.00	0.00
113	SEABED	-501.10	-42.67	0.00	603.17	0.571	0.000	335.91	0.00	0.00	0.00	0.00	0.00
114	SEABED	-507.15	-42.67	0.00	609.22	0.571	0.000	335.91	0.00	0.00	0.00	0.00	0.00
115	SEABED	-513.19	-42.67	0.00	615.27	0.571	0.000	335.91	0.00	0.00	0.00	0.00	0.00
116	SEABED	-519.24	-42.67	0.00	621.32	0.571	0.000	335.91	0.00	0.00	0.00	0.00	0.00
117	SEABED	-525.29	-42.67	0.00	627.37	0.571	0.000	335.91	0.00	0.00	0.00	0.00	0.00
118	SEABED	-531.34	-42.67	0.00	633.42	0.571	0.000	335.91	0.00	0.00	0.00	0.00	0.00
119	SEABED	-537.39	-42.67	0.00	639.47	0.571	0.000	335.91	0.00	0.00	0.00	0.00	0.00
120	SEABED	-543.44	-42.67	0.00	645.52	0.571	0.000	335.91	0.00	0.00	0.00	0.00	0.00
121	SEABED	-549.49	-42.67	0.00	651.56	0.571	0.000	335.91	0.00	0.00	0.00	0.00	0.00
122	SEABED	-555.54	-42.67	0.00	657.61	0.571	0.000	335.91	0.00	0.00	0.00	0.00	0.00
123	SEABED	-561.59	-42.67	0.00	663.66	0.571	0.000	335.91	0.00	0.00	0.00	0.00	0.00
124	SEABED	-567.64	-42.67	0.00	669.71	0.571	0.000	335.91	0.00	0.00	0.00	0.00	0.00
125	SEABED	-573.69	-42.67	0.00	675.76	0.571	0.000	335.91	0.00	0.00	0.00	0.00	0.00
126	SEABED	-579.74	-42.67	0.00	681.81	0.571	0.000	335.91	0.00	0.00	0.00	0.00	0.00
127	SEABED	-585.79	-42.67	0.00	687.86	0.571	0.000	335.91	0.00	0.00	0.00	0.00	0.00
128	SEABED	-591.84	-42.67	0.00	693.91	0.571	0.000	335.91	0.00	0.00	0.00	0.00	0.00
129	SEABED	-597.89	-42.67	0.00	699.96	0.571	0.000	335.91	0.00	0.00	0.00	0.00	0.00
130	SEABED	-603.94	-42.67	0.00	706.01	0.571	0.000	335.91	0.00	0.00	0.00	0.00	0.00
131	SEABED	-609.98	-42.67	0.00	712.06	0.571	0.000	335.91	0.00	0.00	0.00	0.00	0.00
132	SEABED	-616.03	-42.67	0.00	718.11	0.571	0.000	335.91	0.00	0.00	0.00	0.00	0.00
133	SEABED	-622.08	-42.67	0.00	724.16	0.571	0.000	335.91	0.00	0.00	0.00	0.00	0.00
134	SEABED	-628.13	-42.67	0.00	730.21	0.571	0.000	335.91	0.00	0.00	0.00	0.00	0.00
135	SEABED	-634.18	-42.67	0.00	736.26	0.571	0.000	335.91	0.00	0.00	0.00	0.00	0.00
136	SEABED	-640.23	-42.67	0.00	742.31	0.571	0.000	335.91	0.00	0.00	0.00	0.00	0.00
137	SEABED	-646.28	-42.67	0.00	748.35	0.571	0.000	335.91	0.00	0.00	0.00	0.00	0.00
138	SEABED	-652.33	-42.67	0.00	754.40	0.571	0.000	335.91	0.00	0.00	0.00	0.00	0.00
139	SEABED	-658.38	-42.67	0.00	760.45	0.571	0.000	335.91	0.00	0.00	0.00	0.00	0.00
140	SEABED	-664.43	-42.67	0.00	766.50	0.571	0.000	335.91	0.00	0.00	0.00	0.00	0.00
141	SEABED	-670.48	-42.67	0.00	772.55	0.571	0.000	335.91	0.00	0.00	0.00	0.00	0.00
142	SEABED	-676.53	-42.67	0.00	778.60	0.571	0.000	335.91	0.00	0.00	0.00	0.00	0.00
143	SEABED	-682.58	-42.67	0.00	784.65	0.571	0.000	335.91	0.00	0.00	0.00	0.00	0.00
144	SEABED	-688.63	-42.67	0.00	790.70	0.571	0.000	335.91	0.00	0.00	0.00	0.00	0.00
145	SEABED	-694.68	-42.67	0.00	796.75	0.571	0.000	335.91	0.00	0.00	0.00	0.00	0.00
146	SEABED	-700.72	-42.67	0.00	802.80	0.571	0.000	335.91	0.00	0.00	0.00	0.00	0.00
147	SEABED	-706.77	-42.67	0.00	808.85	0.571	0.000	335.91	0.00	0.00	0.00	0.00	0.00
148	SEABED	-712.82	-42.67	0.00	814.90	0.571	0.000	335.91	0.00	0.00	0.00	0.00	0.00
149	SEABED	-718.87	-42.67	0.00	820.95	0.571	0.000	335.91	0.00	0.00	0.00	0.00	0.00

S T A T I C P I P E C O O R D I N A T E S, F O R C E S A N D S T R E S S E S

NODE NO.	PIPE SECTION	X COORD (M)	Y COORD (M)	VERT ANGLE (DEG)	PIPE LENGTH (M)	SUPPORT REACTION (KN)	SEPARA -TION (M)	AXIAL TENSION (KN)	BENDING MOMENT (KN-M)	TENSILE STRESS (MPA)	BENDING STRESS (MPA)	TOTAL STRESS (MPA)	PERCNT YIELD (PCT)
150	SEABED	-724.92	-42.67	0.00	827.00	0.571	0.000	335.91	0.00	0.00	0.00	0.00	0.00
151	SEABED	-730.97	-42.67	0.00	833.05	0.571	0.000	335.91	0.00	0.00	0.00	0.00	0.00
152	SEABED	-737.02	-42.67	0.00	839.10	0.571	0.000	335.91	0.00	0.00	0.00	0.00	0.00
153	SEABED	-743.07	-42.67	0.00	845.14	0.571	0.000	335.91	0.00	0.00	0.00	0.00	0.00
154	SEABED	-749.12	-42.67	0.00	851.19	0.570	0.000	335.91	0.00	0.00	0.00	0.00	0.00
155	SEABED	-755.17	-42.67	0.00	857.24	0.570	0.000	335.91	0.00	0.00	0.00	0.00	0.00
156	SEABED	-761.22	-42.67	0.00	863.29	0.565	0.000	335.91	0.00	0.00	0.00	0.00	0.00
157	SEABED	-767.27	-42.67	0.00	869.34	0.538	0.000	335.91	0.00	0.00	0.00	0.00	0.00
158	SEABED	-773.32	-42.67	-0.01	875.39	0.369	0.000	335.91	0.00	0.00	0.00	0.00	0.00
159	SEABED	-778.00	-42.67	-0.06	880.07	0.000	0.000	335.91	0.00	0.00	0.00	0.00	0.00

LAYDOWN STRAIN HEADING 90°

S T A T I C P I P E C O O R D I N A T E S, F O R C E S A N D S T R A I N S

NODE NO.	PIPE SECTION	X COORD (M)	Y COORD (M)	VERT ANGLE (DEG)	PIPE LENGTH (M)	SUPPORT REACTION (KN)	SEPARA -TION (M)	AXIAL TENSION (KN)	BENDING MOMENT (KN-M)	TENSILE STRAIN (PCT)	BENDING STRAIN (PCT)	TOTAL STRAIN (PCT)	PERCNT ALLOW (PCT)
1	LAYBARGE	96.31	6.41	1.69	0.00	0.655	0.000	0.00	0.00	0.0000	0.0000	0.0000	0.00
3	LAYBARGE	84.28	6.05	1.70	12.04	1.244	0.000	-0.04	0.00	0.0000	0.0000	0.0000	0.00
5	LAYBARGE	73.45	5.73	1.89	22.87	1.315	0.000	-0.08	0.00	0.0000	0.0000	0.0000	0.00
7	TENSIONR	60.11	5.24	2.14	36.23	1.646	0.000	369.57	0.00	0.0000	0.0000	0.0000	0.00
9	LAYBARGE	51.10	4.90	2.15	45.24	0.000	0.000	369.54	0.00	0.0000	0.0000	0.0000	0.00
10	LAYBARGE	46.45	4.73	2.04	49.89	0.000	0.027	369.52	0.00	0.0000	0.0000	0.0000	0.00
12	LAYBARGE	38.36	4.45	2.53	57.99	0.000	0.000	369.47	0.00	0.0172	0.0000	0.0172	0.00
13	LAYBARGE	35.36	4.31	2.60	60.99	12.073	0.000	369.19	-12.51	0.0172	-0.0094	0.0265	0.00
15	LAYBARGE	26.34	3.85	3.70	70.02	0.000	0.000	367.98	-110.70	0.0171	-0.0828	0.0999	0.00
16	LAYBARGE	23.33	3.62	4.88	73.04	66.857	0.000	366.90	-182.72	0.0171	-0.1367	0.1537	0.00
18	LAYBARGE	11.90	2.24	8.57	84.56	0.000	0.000	364.61	-138.38	0.0170	-0.1035	0.1205	0.00
19	LAYBARGE	8.89	1.76	9.90	87.60	62.987	0.000	363.07	-193.38	0.0169	-0.1446	0.1615	0.00
21	LAYBARGE	6.12	1.24	11.15	90.42	0.000	0.000	362.58	-141.27	0.0169	-0.1057	0.1225	0.00
22	LAYBARGE	3.12	0.62	12.10	93.49	12.245	0.000	361.54	-104.41	0.0168	-0.0781	0.0949	0.00
24	LAYBARGE	-6.79	-1.65	13.43	103.66	0.000	0.000	358.86	-33.85	0.0166	-0.0253	0.0420	0.00
27	STINGER	-7.57	-1.84	13.50	104.45	0.267	0.000	358.67	-36.43	0.0166	-0.0272	0.0439	0.00
29	STINGER	-16.43	-4.08	15.32	113.60	42.062	0.000	355.96	-148.76	0.0164	-0.1113	0.1278	0.00
32	STINGER	-25.89	-6.92	17.97	123.47	16.995	0.000	353.38	-102.02	0.0162	-0.0763	0.0927	0.00
34	STINGER	-36.21	-10.52	20.68	134.40	42.530	0.000	349.58	-140.12	0.0160	-0.1048	0.1210	0.00
36	STINGER	-39.02	-11.61	21.51	137.41	0.000	0.351	348.80	-77.86	0.0159	-0.0582	0.0744	0.00

38	SAGBEND	-45.05	-14.04	22.08	143.92	0.000	0.000	346.51	-1.22	0.0157	-0.0009	0.0170	0.00
39	SAGBEND	-50.66	-16.30	21.82	149.97	0.000	0.000	344.23	31.53	0.0156	0.0236	0.0396	0.00
40	SAGBEND	-56.29	-18.52	21.19	156.02	0.000	0.000	341.98	47.32	0.0154	0.0354	0.0513	0.00
41	SAGBEND	-61.95	-20.67	20.39	162.07	0.000	0.000	339.82	55.15	0.0152	0.0412	0.0570	0.00
42	SAGBEND	-67.63	-22.73	19.50	168.12	0.000	0.000	337.75	59.24	0.0151	0.0443	0.0600	0.00
43	SAGBEND	-73.35	-24.71	18.56	174.17	0.000	0.000	335.77	61.55	0.0149	0.0460	0.0616	0.00
44	SAGBEND	-79.10	-26.58	17.59	180.22	0.000	0.000	333.89	63.00	0.0148	0.0471	0.0626	0.00
45	SAGBEND	-84.89	-28.36	16.61	186.27	0.000	0.000	332.11	64.04	0.0147	0.0479	0.0633	0.00
46	SAGBEND	-90.70	-30.04	15.61	192.32	0.000	0.000	330.43	64.86	0.0145	0.0485	0.0639	0.00
47	SAGBEND	-96.54	-31.62	14.60	198.37	0.000	0.000	328.86	65.56	0.0144	0.0490	0.0643	0.00
48	SAGBEND	-102.41	-33.09	13.58	204.42	0.000	0.000	327.38	66.18	0.0143	0.0495	0.0647	0.00
49	SAGBEND	-108.30	-34.46	12.54	210.47	0.000	0.000	326.02	66.75	0.0142	0.0499	0.0651	0.00
50	SAGBEND	-114.22	-35.72	11.50	216.52	0.000	0.000	324.76	67.27	0.0141	0.0503	0.0654	0.00
51	SAGBEND	-120.16	-36.87	10.46	222.57	0.000	0.000	323.60	67.74	0.0140	0.0507	0.0657	0.00
52	SAGBEND	-126.12	-37.91	9.40	228.62	0.000	0.000	322.56	68.15	0.0140	0.0510	0.0659	0.00
53	SAGBEND	-132.09	-38.85	8.34	234.67	0.000	0.000	321.63	68.48	0.0139	0.0512	0.0662	0.00
54	SAGBEND	-138.09	-39.67	7.28	240.72	0.000	0.000	320.80	68.72	0.0138	0.0514	0.0663	0.00
55	SAGBEND	-144.10	-40.38	6.21	246.77	0.000	0.000	320.09	68.79	0.0138	0.0514	0.0663	0.00
56	SAGBEND	-150.12	-40.98	5.15	252.82	0.000	0.000	319.50	68.55	0.0137	0.0513	0.0661	0.00
57	SAGBEND	-156.15	-41.47	4.09	258.87	0.000	0.000	319.01	67.76	0.0137	0.0507	0.0655	0.00
58	SAGBEND	-162.18	-41.84	3.05	264.92	0.000	0.000	318.64	65.85	0.0137	0.0492	0.0640	0.00
59	SAGBEND	-168.23	-42.11	2.06	270.97	0.000	0.000	318.39	61.70	0.0137	0.0461	0.0609	0.00
60	SAGBEND	-174.28	-42.28	1.16	277.02	0.009	0.000	318.24	52.99	0.0136	0.0396	0.0544	0.00

S T A T I C P I P E C O O R D I N A T E S, F O R C E S A N D S T R A I N S

NODE NO.	PIPE SECTION	X COORD (M)	Y COORD (M)	VERT ANGLE (DEG)	PIPE LENGTH (M)	SUPPORT REACTION (KN)	SEPARA -TION (M)	AXIAL TENSION (KN)	BENDING MOMENT (KN-M)	TENSILE STRAIN (PCT)	BENDING STRAIN (PCT)	TOTAL STRAIN (PCT)	PERCNT ALLOW (PCT)
61	SEABED	-180.33	-42.36	0.46	283.07	2.428	0.000	318.19	35.13	0.0136	0.0263	0.0411	0.00
62	SEABED	-186.38	-42.39	0.09	289.12	6.504	0.000	318.21	13.84	0.0136	0.0103	0.0252	0.00
63	SEABED	-192.43	-42.39	-0.02	295.17	7.074	0.000	318.21	2.62	0.0136	0.0020	0.0168	0.00
64	SEABED	-198.48	-42.39	-0.03	301.22	6.610	0.000	318.21	-0.74	0.0136	-0.0006	0.0154	0.00
65	SEABED	-204.53	-42.39	-0.01	307.27	6.220	0.000	318.21	-0.92	0.0136	-0.0007	0.0156	0.00
66	SEABED	-210.58	-42.39	0.00	313.32	6.056	0.000	318.21	-0.45	0.0136	-0.0003	0.0152	0.00
67	SEABED	-216.63	-42.39	0.00	319.37	6.021	0.000	318.21	-0.12	0.0136	-0.0001	0.0150	0.00
68	SEABED	-222.68	-42.39	0.00	325.42	6.027	0.000	318.21	0.00	0.0136	0.0000	0.0149	0.00
69	SEABED	-228.73	-42.39	0.00	331.47	6.037	0.000	318.21	0.02	0.0136	0.0000	0.0149	0.00
70	SEABED	-234.78	-42.39	0.00	337.52	6.042	0.000	318.21	0.01	0.0136	0.0000	0.0149	0.00
71	SEABED	-240.83	-42.39	0.00	343.57	6.043	0.000	318.21	0.00	0.0136	0.0000	0.0149	0.00
72	SEABED	-246.88	-42.39	0.00	349.62	6.043	0.000	318.21	0.00	0.0136	0.0000	0.0149	0.00
73	SEABED	-252.93	-42.39	0.00	355.67	6.043	0.000	318.21	0.00	0.0136	0.0000	0.0149	0.00
74	SEABED	-258.98	-42.39	0.00	361.72	6.043	0.000	318.21	0.00	0.0136	0.0000	0.0149	0.00
75	SEABED	-265.03	-42.39	0.00	367.77	6.043	0.000	318.21	0.00	0.0136	0.0000	0.0149	0.00
76	SEABED	-271.08	-42.39	0.00	373.82	0.000	0.000	318.21	0.00	0.0136	0.0000	0.0149	0.00

S T A T I C P I P E C O O R D I N A T E S, F O R C E S A N D S T R A I N S

NODE NO.	PIPE SECTION	X COORD (M)	Y COORD (M)	VERT ANGLE (DEG)	PIPE LENGTH (M)	SUPPORT REACTION (KN)	SEPARA -TION (M)	AXIAL TENSION (KN)	BENDING MOMENT (KN-M)	TENSILE STRAIN (PCT)	BENDING STRAIN (PCT)	TOTAL STRAIN (PCT)	PERCNT ALLOW (PCT)
1	LAYBARGE	96.31	6.41	1.69	0.00	0.655	0.000	0.00	0.00	0.0000	0.0000	0.0000	0.00
3	LAYBARGE	84.28	6.05	1.70	12.04	1.244	0.000	-0.04	0.00	0.0000	0.0000	0.0000	0.00
5	LAYBARGE	73.45	5.73	1.89	22.87	1.315	0.000	-0.08	0.00	0.0000	0.0000	0.0000	0.00
7	TENSIONR	60.11	5.24	2.18	36.23	1.906	0.000	369.57	0.00	0.0000	0.0000	0.0000	0.00
9	LAYBARGE	51.10	4.89	2.23	45.24	0.000	0.000	369.54	0.00	0.0000	0.0000	0.0000	0.00
10	LAYBARGE	46.45	4.71	2.12	49.89	0.000	0.008	369.52	0.00	0.0000	0.0000	0.0000	0.00
12	LAYBARGE	38.36	4.42	2.02	57.99	0.000	0.000	369.48	0.00	0.0000	0.0000	0.0000	0.00
13	LAYBARGE	35.36	4.31	2.21	60.99	3.771	0.000	369.47	0.00	0.0000	0.0000	0.0000	0.00
15	LAYBARGE	26.34	3.93	5.72	70.02	0.000	0.000	368.81	0.00	0.0172	0.0000	0.0172	0.00
16	LAYBARGE	23.34	3.62	6.00	73.04	40.740	0.000	368.06	-64.60	0.0171	-0.0483	0.0654	0.00
18	LAYBARGE	11.90	2.23	8.23	84.56	0.000	0.000	364.92	-146.79	0.0170	-0.1098	0.1268	0.00
19	LAYBARGE	8.89	1.76	9.74	87.60	81.638	0.000	363.08	-225.50	0.0169	-0.1687	0.1855	0.00
21	LAYBARGE	6.12	1.24	11.18	90.43	0.000	0.000	362.87	-156.42	0.0169	-0.1170	0.1339	0.00
22	LAYBARGE	3.11	0.62	12.15	93.50	4.003	0.000	361.96	-97.67	0.0168	-0.0730	0.0899	0.00
24	LAYBARGE	-6.79	-1.65	13.43	103.66	0.000	0.000	359.24	-35.59	0.0167	-0.0266	0.0433	0.00
27	STINGER	-7.57	-1.84	13.51	104.45	1.528	0.000	359.05	-38.76	0.0167	-0.0290	0.0457	0.00
29	STINGER	-16.43	-4.08	15.33	113.60	41.545	0.000	356.36	-147.62	0.0165	-0.1104	0.1270	0.00
32	STINGER	-25.89	-6.93	17.96	123.47	17.022	0.000	353.77	-101.72	0.0163	-0.0761	0.0925	0.00
34	STINGER	-36.21	-10.53	20.67	134.41	42.522	0.000	349.97	-139.95	0.0160	-0.1047	0.1209	0.00
36	STINGER	-39.01	-11.61	21.50	137.42	0.000	0.352	349.19	-77.74	0.0159	-0.0581	0.0744	0.00
38	SAGBEND	-45.05	-14.04	22.07	143.92	0.000	0.000	346.90	-1.20	0.0158	-0.0009	0.0170	0.00
39	SAGBEND	-50.66	-16.30	21.80	149.97	0.000	0.000	344.62	31.51	0.0156	0.0236	0.0396	0.00
40	SAGBEND	-56.29	-18.52	21.18	156.02	0.000	0.000	342.38	47.28	0.0154	0.0354	0.0513	0.00
41	SAGBEND	-61.94	-20.67	20.38	162.07	0.000	0.000	340.21	55.10	0.0153	0.0412	0.0570	0.00
42	SAGBEND	-67.63	-22.73	19.49	168.12	0.000	0.000	338.14	59.18	0.0151	0.0443	0.0600	0.00
43	SAGBEND	-73.35	-24.70	18.55	174.17	0.000	0.000	336.17	61.48	0.0150	0.0460	0.0616	0.00
44	SAGBEND	-79.10	-26.58	17.59	180.22	0.000	0.000	334.29	62.93	0.0148	0.0471	0.0626	0.00
45	SAGBEND	-84.89	-28.36	16.60	186.27	0.000	0.000	332.51	63.96	0.0147	0.0478	0.0633	0.00
46	SAGBEND	-90.70	-30.03	15.60	192.32	0.000	0.000	330.83	64.78	0.0146	0.0484	0.0638	0.00
47	SAGBEND	-96.54	-31.61	14.59	198.37	0.000	0.000	329.25	65.48	0.0145	0.0490	0.0643	0.00
48	SAGBEND	-102.41	-33.08	13.57	204.42	0.000	0.000	327.78	66.10	0.0143	0.0494	0.0647	0.00
49	SAGBEND	-108.30	-34.45	12.54	210.47	0.000	0.000	326.41	66.67	0.0142	0.0499	0.0650	0.00
50	SAGBEND	-114.22	-35.71	11.50	216.52	0.000	0.000	325.15	67.19	0.0141	0.0502	0.0653	0.00
51	SAGBEND	-120.16	-36.86	10.46	222.57	0.000	0.000	324.00	67.65	0.0141	0.0506	0.0656	0.00
52	SAGBEND	-126.12	-37.91	9.41	228.62	0.000	0.000	322.96	68.06	0.0140	0.0509	0.0659	0.00
53	SAGBEND	-132.09	-38.84	8.35	234.67	0.000	0.000	322.02	68.40	0.0139	0.0512	0.0661	0.00
54	SAGBEND	-138.09	-39.66	7.29	240.72	0.000	0.000	321.20	68.64	0.0139	0.0513	0.0662	0.00
55	SAGBEND	-144.09	-40.37	6.22	246.77	0.000	0.000	320.49	68.71	0.0138	0.0514	0.0663	0.00
56	SAGBEND	-150.11	-40.97	5.16	252.82	0.000	0.000	319.89	68.48	0.0138	0.0512	0.0661	0.00
57	SAGBEND	-156.14	-41.46	4.10	258.87	0.000	0.000	319.41	67.69	0.0137	0.0506	0.0655	0.00
58	SAGBEND	-162.18	-41.84	3.06	264.92	0.000	0.000	319.04	65.81	0.0137	0.0492	0.0640	0.00
59	SAGBEND	-168.23	-42.11	2.07	270.97	0.000	0.000	318.78	61.70	0.0137	0.0461	0.0610	0.00
60	SAGBEND	-174.27	-42.28	1.17	277.02	0.008	0.000	318.63	53.09	0.0137	0.0397	0.0545	0.00

S T A T I C P I P E C O O R D I N A T E S, F O R C E S A N D S T R A I N S

NODE NO.	PIPE SECTION	X COORD (M)	Y COORD (M)	VERT ANGLE (DEG)	PIPE LENGTH (M)	SUPPORT REACTION (KN)	SEPARA -TION (M)	AXIAL TENSION (KN)	BENDING MOMENT (KN-M)	TENSILE STRAIN (PCT)	BENDING STRAIN (PCT)	TOTAL STRAIN (PCT)	PERCNT ALLOW (PCT)
61	SEABED	-180.32	-42.36	0.47	283.07	2.365	0.000	318.58	35.38	0.0137	0.0265	0.0413	0.00
62	SEABED	-186.37	-42.39	0.09	289.12	6.477	0.000	318.60	14.03	0.0137	0.0105	0.0253	0.00
63	SEABED	-192.42	-42.39	-0.02	295.17	7.076	0.000	318.61	2.70	0.0137	0.0020	0.0169	0.00
64	SEABED	-198.47	-42.39	-0.03	301.22	6.615	0.000	318.61	-0.73	0.0137	-0.0005	0.0154	0.00
65	SEABED	-204.52	-42.39	-0.01	307.27	6.223	0.000	318.61	-0.92	0.0137	-0.0007	0.0156	0.00
66	SEABED	-210.57	-42.39	0.00	313.32	6.058	0.000	318.61	-0.45	0.0137	-0.0003	0.0152	0.00
67	SEABED	-216.62	-42.39	0.00	319.37	6.021	0.000	318.61	-0.12	0.0137	-0.0001	0.0150	0.00
68	SEABED	-222.67	-42.39	0.00	325.42	6.027	0.000	318.61	0.00	0.0137	0.0000	0.0149	0.00
69	SEABED	-228.72	-42.39	0.00	331.47	6.037	0.000	318.61	0.02	0.0137	0.0000	0.0149	0.00
70	SEABED	-234.77	-42.39	0.00	337.52	6.042	0.000	318.61	0.01	0.0137	0.0000	0.0149	0.00
71	SEABED	-240.82	-42.39	0.00	343.57	6.043	0.000	318.61	0.00	0.0137	0.0000	0.0149	0.00
72	SEABED	-246.87	-42.39	0.00	349.62	6.043	0.000	318.61	0.00	0.0137	0.0000	0.0149	0.00
73	SEABED	-252.92	-42.39	0.00	355.67	6.043	0.000	318.61	0.00	0.0137	0.0000	0.0149	0.00
74	SEABED	-258.97	-42.39	0.00	361.72	6.043	0.000	318.61	0.00	0.0137	0.0000	0.0149	0.00
75	SEABED	-265.02	-42.39	0.00	367.77	6.043	0.000	318.61	0.00	0.0137	0.0000	0.0149	0.00
76	SEABED	-271.07	-42.39	0.00	373.82	0.000	0.000	318.61	0.00	0.0137	0.0000	0.0149	0.00

S T A T I C P I P E C O O R D I N A T E S, F O R C E S A N D S T R A I N S

NODE NO.	PIPE SECTION	X COORD (M)	Y COORD (M)	VERT ANGLE (DEG)	PIPE LENGTH (M)	SUPPORT REACTION (KN)	SEPARA -TION (M)	AXIAL TENSION (KN)	BENDING MOMENT (KN-M)	TENSILE STRAIN (PCT)	BENDING STRAIN (PCT)	TOTAL STRAIN (PCT)	PERCNT ALLOW (PCT)
1	LAYBARGE	96.31	6.41	1.69	0.00	0.655	0.000	0.00	0.00	0.0000	0.0000	0.0000	0.00
3	LAYBARGE	84.28	6.05	1.70	12.04	1.244	0.000	-0.04	0.00	0.0000	0.0000	0.0000	0.00
5	LAYBARGE	73.45	5.73	1.89	22.87	1.315	0.000	-0.08	0.00	0.0000	0.0000	0.0000	0.00
7	TENSIONR	60.11	5.24	2.18	36.23	1.906	0.000	369.57	0.00	0.0000	0.0000	0.0000	0.00
9	LAYBARGE	51.10	4.89	2.23	45.24	0.000	0.000	369.54	0.00	0.0000	0.0000	0.0000	0.00
10	LAYBARGE	46.45	4.71	2.12	49.89	0.000	0.008	369.52	0.00	0.0000	0.0000	0.0000	0.00
12	LAYBARGE	38.36	4.42	2.02	57.99	0.000	0.000	369.48	0.00	0.0000	0.0000	0.0000	0.00
13	LAYBARGE	35.36	4.31	2.64	60.99	9.350	0.000	369.45	0.00	0.0000	0.0000	0.0000	0.00
15	LAYBARGE	26.35	3.79	3.27	70.02	0.000	0.000	369.42	0.00	0.0000	0.0000	0.0000	0.00
16	LAYBARGE	23.33	3.62	4.90	73.04	22.460	0.000	369.24	0.00	0.0000	0.0000	0.0000	0.00
18	LAYBARGE	11.91	2.30	10.17	84.54	0.000	0.000	368.51	0.00	0.0171	0.0000	0.0171	0.00
19	LAYBARGE	8.89	1.76	10.49	87.60	35.927	0.000	367.25	-74.09	0.0171	-0.0554	0.0725	0.00
21	LAYBARGE	6.12	1.23	11.08	90.43	0.000	0.000	366.19	-85.66	0.0170	-0.0641	0.0811	0.00
22	LAYBARGE	3.11	0.62	11.87	93.50	36.704	0.000	364.82	-118.38	0.0170	-0.0885	0.1055	0.00
24	LAYBARGE	-6.80	-1.63	13.38	103.66	0.000	0.000	362.22	-35.64	0.0168	-0.0267	0.0435	0.00

27	STINGER	-7.57	-1.81	13.45	104.45	0.000	0.010	362.04	-37.62	0.0168	-0.0281	0.0450	0.00
29	STINGER	-16.44	-4.05	15.25	113.60	41.003	0.000	359.36	-145.99	0.0166	-0.1092	0.1259	0.00
32	STINGER	-25.90	-6.88	17.90	123.48	18.349	0.000	356.76	-105.15	0.0164	-0.0786	0.0952	0.00
34	STINGER	-36.22	-10.47	20.63	134.41	42.107	0.000	352.99	-138.87	0.0161	-0.1039	0.1203	0.00
36	STINGER	-39.03	-11.56	21.45	137.42	0.000	0.352	352.21	-76.92	0.0161	-0.0575	0.0739	0.00
38	SAGBEND	-45.05	-13.97	22.02	143.91	0.000	0.000	349.93	-1.01	0.0159	-0.0008	0.0170	0.00
39	SAGBEND	-50.67	-16.23	21.75	149.96	0.000	0.000	347.65	31.42	0.0157	0.0235	0.0397	0.00
40	SAGBEND	-56.30	-18.44	21.13	156.01	0.000	0.000	345.41	47.01	0.0156	0.0352	0.0512	0.00
41	SAGBEND	-61.95	-20.58	20.33	162.06	0.000	0.000	343.26	54.71	0.0154	0.0409	0.0569	0.00
42	SAGBEND	-67.64	-22.64	19.45	168.11	0.000	0.000	341.19	58.71	0.0153	0.0439	0.0598	0.00
43	SAGBEND	-73.36	-24.61	18.52	174.16	0.000	0.000	339.22	60.97	0.0151	0.0456	0.0614	0.00
44	SAGBEND	-79.12	-26.48	17.56	180.21	0.000	0.000	337.34	62.39	0.0150	0.0467	0.0623	0.00
45	SAGBEND	-84.90	-28.26	16.58	186.26	0.000	0.000	335.56	63.40	0.0148	0.0474	0.0630	0.00
46	SAGBEND	-90.71	-29.94	15.60	192.31	0.000	0.000	333.89	64.20	0.0147	0.0480	0.0635	0.00
47	SAGBEND	-96.55	-31.51	14.59	198.36	0.000	0.000	332.31	64.88	0.0146	0.0485	0.0640	0.00
48	SAGBEND	-102.42	-32.99	13.58	204.41	0.000	0.000	330.84	65.49	0.0145	0.0490	0.0643	0.00
49	SAGBEND	-108.31	-34.35	12.56	210.46	0.000	0.000	329.47	66.05	0.0144	0.0494	0.0647	0.00
50	SAGBEND	-114.23	-35.62	11.53	216.51	0.000	0.000	328.21	66.56	0.0143	0.0498	0.0650	0.00
51	SAGBEND	-120.17	-36.77	10.50	222.56	0.000	0.000	327.05	67.02	0.0142	0.0501	0.0653	0.00
52	SAGBEND	-126.13	-37.82	9.46	228.61	0.000	0.000	326.00	67.43	0.0141	0.0504	0.0656	0.00
53	SAGBEND	-132.10	-38.76	8.41	234.66	0.000	0.000	325.06	67.77	0.0141	0.0507	0.0658	0.00
54	SAGBEND	-138.10	-39.59	7.35	240.71	0.000	0.000	324.23	68.01	0.0140	0.0509	0.0659	0.00
55	SAGBEND	-144.10	-40.31	6.30	246.76	0.000	0.000	323.52	68.10	0.0139	0.0509	0.0660	0.00
56	SAGBEND	-150.12	-40.92	5.24	252.81	0.000	0.000	322.91	67.93	0.0139	0.0508	0.0658	0.00
57	SAGBEND	-156.15	-41.42	4.19	258.86	0.000	0.000	322.41	67.25	0.0139	0.0503	0.0653	0.00
58	SAGBEND	-162.19	-41.80	3.16	264.91	0.000	0.000	322.03	65.57	0.0138	0.0490	0.0640	0.00
59	SAGBEND	-168.23	-42.08	2.17	270.96	0.000	0.000	321.76	61.88	0.0138	0.0463	0.0612	0.00
60	SAGBEND	-174.28	-42.26	1.26	277.01	0.000	0.000	321.60	54.10	0.0138	0.0405	0.0554	0.00

S T A T I C P I P E C O O R D I N A T E S, F O R C E S A N D S T R A I N S

NODE NO.	PIPE SECTION	X COORD (M)	Y COORD (M)	VERT ANGLE (DEG)	PIPE LENGTH (M)	SUPPORT REACTION (KN)	SEPARA -TION (M)	AXIAL TENSION (KN)	BENDING MOMENT (KN-M)	TENSILE STRAIN (PCT)	BENDING STRAIN (PCT)	TOTAL STRAIN (PCT)	PERCNT ALLOW (PCT)
61	SEABED	-180.33	-42.36	0.54	283.06	1.776	0.000	321.54	37.92	0.0138	0.0284	0.0433	0.00
62	SEABED	-186.38	-42.39	0.12	289.11	6.188	0.000	321.56	16.06	0.0138	0.0120	0.0270	0.00
63	SEABED	-192.43	-42.39	-0.01	295.16	7.086	0.000	321.56	3.54	0.0138	0.0026	0.0177	0.00
64	SEABED	-198.48	-42.39	-0.03	301.21	6.671	0.000	321.56	-0.54	0.0138	-0.0004	0.0154	0.00
65	SEABED	-204.53	-42.39	-0.02	307.26	6.257	0.000	321.56	-0.95	0.0138	-0.0007	0.0157	0.00
66	SEABED	-210.58	-42.39	-0.01	313.31	6.069	0.000	321.56	-0.50	0.0138	-0.0004	0.0154	0.00
67	SEABED	-216.63	-42.39	0.00	319.36	6.023	0.000	321.56	-0.15	0.0138	-0.0001	0.0151	0.00
68	SEABED	-222.68	-42.39	0.00	325.41	6.026	0.000	321.56	-0.01	0.0138	0.0000	0.0150	0.00
69	SEABED	-228.73	-42.39	0.00	331.46	6.036	0.000	321.56	0.02	0.0138	0.0000	0.0150	0.00
70	SEABED	-234.78	-42.39	0.00	337.51	6.041	0.000	321.56	0.01	0.0138	0.0000	0.0150	0.00
71	SEABED	-240.83	-42.39	0.00	343.56	6.043	0.000	321.56	0.01	0.0138	0.0000	0.0150	0.00
72	SEABED	-246.88	-42.39	0.00	349.61	6.043	0.000	321.56	0.00	0.0138	0.0000	0.0150	0.00
73	SEABED	-252.93	-42.39	0.00	355.66	6.043	0.000	321.56	0.00	0.0138	0.0000	0.0150	0.00
74	SEABED	-258.98	-42.39	0.00	361.71	6.043	0.000	321.56	0.00	0.0138	0.0000	0.0150	0.00
75	SEABED	-265.03	-42.39	0.00	367.76	6.043	0.000	321.56	0.00	0.0138	0.0000	0.0150	0.00
76	SEABED	-271.08	-42.39	0.00	373.81	0.000	0.000	321.56	0.00	0.0138	0.0000	0.0150	0.00

S T A T I C P I P E C O O R D I N A T E S, F O R C E S A N D S T R A I N S

NODE NO.	PIPE SECTION	X COORD (M)	Y COORD (M)	VERT ANGLE (DEG)	PIPE LENGTH (M)	SUPPORT REACTION (KN)	SEPARA -TION (M)	AXIAL TENSION (KN)	BENDING MOMENT (KN-M)	TENSILE STRAIN (PCT)	BENDING STRAIN (PCT)	TOTAL STRAIN (PCT)	PERCNT ALLOW (PCT)
1	LAYBARGE	96.31	6.41	1.69	0.00	0.655	0.000	0.00	0.00	0.0000	0.0000	0.0000	0.00
3	LAYBARGE	84.28	6.05	1.70	12.04	1.244	0.000	-0.04	0.00	0.0000	0.0000	0.0000	0.00
5	LAYBARGE	73.45	5.73	1.89	22.87	1.315	0.000	-0.08	0.00	0.0000	0.0000	0.0000	0.00
7	TENSIONR	60.11	5.24	2.18	36.23	1.906	0.000	369.57	0.00	0.0000	0.0000	0.0000	0.00
9	LAYBARGE	51.10	4.89	2.23	45.24	0.000	0.000	369.54	0.00	0.0000	0.0000	0.0000	0.00
10	LAYBARGE	46.45	4.71	2.12	49.89	0.000	0.008	369.52	0.00	0.0000	0.0000	0.0000	0.00
12	LAYBARGE	38.36	4.42	2.02	57.99	0.000	0.000	369.49	0.00	0.0000	0.0000	0.0000	0.00
13	LAYBARGE	35.36	4.31	2.64	60.99	9.354	0.000	369.45	0.00	0.0000	0.0000	0.0000	0.00
15	LAYBARGE	26.35	3.79	3.27	70.02	0.000	0.000	369.42	0.00	0.0000	0.0000	0.0000	0.00
16	LAYBARGE	23.33	3.62	5.30	73.04	27.619	0.000	369.15	0.00	0.0000	0.0000	0.0000	0.00
18	LAYBARGE	11.93	2.14	7.32	84.54	0.000	0.000	369.26	0.00	0.0000	0.0000	0.0000	0.00
19	LAYBARGE	8.89	1.76	8.56	87.60	17.013	0.000	369.12	0.00	0.0000	0.0000	0.0000	0.00
21	LAYBARGE	6.11	1.28	12.24	90.42	0.000	0.000	368.84	0.00	0.0172	0.0000	0.0172	0.00
22	LAYBARGE	3.11	0.62	12.46	93.49	33.769	0.000	367.44	-58.50	0.0171	-0.0438	0.0608	0.00
24	LAYBARGE	-6.80	-1.66	13.40	103.66	0.000	0.000	364.57	-45.47	0.0169	-0.0340	0.0510	0.00
27	STINGER	-7.57	-1.84	13.50	104.45	8.941	0.000	364.37	-52.11	0.0169	-0.0390	0.0559	0.00
29	STINGER	-16.43	-4.10	15.39	113.60	38.447	0.000	361.74	-140.07	0.0167	-0.1048	0.1216	0.00
32	STINGER	-25.88	-6.94	17.90	123.47	17.241	0.000	359.12	-99.37	0.0165	-0.0743	0.0910	0.00
34	STINGER	-36.21	-10.52	20.56	134.40	42.465	0.000	355.33	-138.40	0.0162	-0.1035	0.1200	0.00
36	STINGER	-39.02	-11.60	21.37	137.41	0.000	0.353	354.56	-76.55	0.0162	-0.0573	0.0737	0.00
38	SAGBEND	-45.05	-14.01	21.93	143.90	0.000	0.000	352.28	-0.87	0.0160	-0.0007	0.0170	0.00
39	SAGBEND	-50.66	-16.26	21.67	149.95	0.000	0.000	350.01	31.36	0.0158	0.0235	0.0397	0.00
40	SAGBEND	-56.30	-18.47	21.05	156.00	0.000	0.000	347.78	46.81	0.0157	0.0350	0.0512	0.00
41	SAGBEND	-61.96	-20.60	20.25	162.05	0.000	0.000	345.63	54.42	0.0155	0.0407	0.0568	0.00
42	SAGBEND	-67.65	-22.65	19.38	168.10	0.000	0.000	343.58	58.37	0.0154	0.0437	0.0596	0.00
43	SAGBEND	-73.37	-24.61	18.45	174.15	0.000	0.000	341.61	60.58	0.0152	0.0453	0.0612	0.00
44	SAGBEND	-79.13	-26.48	17.50	180.20	0.000	0.000	339.74	61.98	0.0151	0.0464	0.0621	0.00
45	SAGBEND	-84.91	-28.25	16.53	186.25	0.000	0.000	337.97	62.97	0.0149	0.0471	0.0628	0.00
46	SAGBEND	-90.73	-29.92	15.55	192.30	0.000	0.000	336.30	63.75	0.0148	0.0477	0.0633	0.00
47	SAGBEND	-96.57	-31.49	14.55	198.35	0.000	0.000	334.73	64.43	0.0147	0.0482	0.0637	0.00
48	SAGBEND	-102.44	-32.96	13.55	204.40	0.000	0.000	333.26	65.03	0.0146	0.0486	0.0641	0.00
49	SAGBEND	-108.33	-34.33	12.54	210.45	0.000	0.000	331.89	65.58	0.0145	0.0490	0.0645	0.00
50	SAGBEND	-114.25	-35.59	11.52	216.50	0.000	0.000	330.63	66.08	0.0144	0.0494	0.0648	0.00
51	SAGBEND	-120.19	-36.74	10.49	222.55	0.000	0.000	329.48	66.53	0.0143	0.0498	0.0651	0.00
52	SAGBEND	-126.15	-37.79	9.45	228.60	0.000	0.000	328.43	66.93	0.0142	0.0501	0.0653	0.00
53	SAGBEND	-132.12	-38.73	8.41	234.65	0.000	0.000	327.49	67.27	0.0142	0.0503	0.0655	0.00
54	SAGBEND	-138.11	-39.56	7.37	240.70	0.000	0.000	326.66	67.52	0.0141	0.0505	0.0657	0.00
55	SAGBEND	-144.12	-40.28	6.32	246.75	0.000	0.000	325.94	67.62	0.0141	0.0506	0.0657	0.00
56	SAGBEND	-150.14	-40.89	5.27	252.80	0.000	0.000	325.33	67.47	0.0140	0.0505	0.0656	0.00
57	SAGBEND	-156.17	-41.39	4.23	258.85	0.000	0.000	324.83	66.84	0.0140	0.0500	0.0651	0.00
58	SAGBEND	-162.21	-41.79	3.20	264.90	0.000	0.000	324.44	65.26	0.0139	0.0488	0.0639	0.00
59	SAGBEND	-168.25	-42.07	2.21	270.95	0.000	0.000	324.17	61.78	0.0139	0.0462	0.0613	0.00
60	SAGBEND	-174.30	-42.26	1.31	277.00	0.000	0.000	324.00	54.40	0.0139	0.0407	0.0557	0.00

S T A T I C P I P E C O O R D I N A T E S, F O R C E S A N D S T R A I N S

NODE NO.	PIPE SECTION	X COORD (M)	Y COORD (M)	VERT ANGLE (DEG)	PIPE LENGTH (M)	SUPPORT REACTION (KN)	SEPARA -TION (M)	AXIAL TENSION (KN)	BENDING MOMENT (KN-M)	TENSILE STRAIN (PCT)	BENDING STRAIN (PCT)	TOTAL STRAIN (PCT)	PERCNT ALLOW (PCT)
61	SEABED	-180.35	-42.35	0.57	283.05	1.517	0.000	323.94	38.99	0.0139	0.0292	0.0442	0.00
62	SEABED	-186.40	-42.39	0.14	289.10	6.021	0.000	323.95	17.05	0.0139	0.0128	0.0278	0.00
63	SEABED	-192.45	-42.39	-0.01	295.15	7.080	0.000	323.96	3.99	0.0139	0.0030	0.0181	0.00
64	SEABED	-198.50	-42.39	-0.03	301.20	6.696	0.000	323.96	-0.43	0.0139	-0.0003	0.0155	0.00
65	SEABED	-204.55	-42.39	-0.02	307.25	6.274	0.000	323.96	-0.95	0.0139	-0.0007	0.0158	0.00
66	SEABED	-210.60	-42.39	-0.01	313.30	6.076	0.000	323.96	-0.52	0.0139	-0.0004	0.0155	0.00
67	SEABED	-216.65	-42.39	0.00	319.35	6.024	0.000	323.96	-0.16	0.0139	-0.0001	0.0153	0.00
68	SEABED	-222.70	-42.39	0.00	325.40	6.025	0.000	323.96	-0.01	0.0139	0.0000	0.0151	0.00
69	SEABED	-228.75	-42.39	0.00	331.45	6.035	0.000	323.96	0.02	0.0139	0.0000	0.0152	0.00
70	SEABED	-234.80	-42.39	0.00	337.50	6.041	0.000	323.96	0.01	0.0139	0.0000	0.0151	0.00
71	SEABED	-240.85	-42.39	0.00	343.55	6.043	0.000	323.96	0.01	0.0139	0.0000	0.0151	0.00
72	SEABED	-246.90	-42.39	0.00	349.60	6.043	0.000	323.96	0.00	0.0139	0.0000	0.0151	0.00
73	SEABED	-252.95	-42.39	0.00	355.65	6.043	0.000	323.96	0.00	0.0139	0.0000	0.0151	0.00
74	SEABED	-259.00	-42.39	0.00	361.70	6.043	0.000	323.96	0.00	0.0139	0.0000	0.0151	0.00
75	SEABED	-265.05	-42.39	0.00	367.75	6.043	0.000	323.96	0.00	0.0139	0.0000	0.0151	0.00
76	SEABED	-271.10	-42.39	0.00	373.80	0.000	0.000	323.96	0.00	0.0139	0.0000	0.0151	0.00

S T A T I C P I P E C O O R D I N A T E S, F O R C E S A N D S T R A I N S

NODE NO.	PIPE SECTION	X COORD (M)	Y COORD (M)	VERT ANGLE (DEG)	PIPE LENGTH (M)	SUPPORT REACTION (KN)	SEPARA -TION (M)	AXIAL TENSION (KN)	BENDING MOMENT (KN-M)	TENSILE STRAIN (PCT)	BENDING STRAIN (PCT)	TOTAL STRAIN (PCT)	PERCNT ALLOW (PCT)
1	LAYBARGE	96.31	6.41	1.69	0.00	0.655	0.000	0.00	0.00	0.0000	0.0000	0.0000	0.00
3	LAYBARGE	84.28	6.05	1.70	12.04	1.244	0.000	-0.04	0.00	0.0000	0.0000	0.0000	0.00
5	LAYBARGE	73.45	5.73	1.89	22.87	1.315	0.000	-0.08	0.00	0.0000	0.0000	0.0000	0.00
7	TENSIONR	60.11	5.24	2.18	36.23	1.890	0.000	346.97	0.00	0.0000	0.0000	0.0000	0.00
9	LAYBARGE	51.10	4.88	2.23	45.24	0.000	0.000	346.94	0.00	0.0000	0.0000	0.0000	0.00
10	LAYBARGE	46.45	4.71	2.11	49.89	0.000	0.006	346.92	0.00	0.0000	0.0000	0.0000	0.00
12	LAYBARGE	38.36	4.42	2.01	57.99	0.000	0.000	346.89	0.00	0.0000	0.0000	0.0000	0.00
13	LAYBARGE	35.36	4.31	2.64	60.99	8.904	0.000	346.85	0.00	0.0000	0.0000	0.0000	0.00
15	LAYBARGE	26.35	3.79	3.27	70.02	0.000	0.000	346.82	0.00	0.0000	0.0000	0.0000	0.00

16	LAYBARGE	23.33	3.62	5.30	73.04	26.017	0.000	346.57	0.00	0.0000	0.0000	0.0000	0.00
18	LAYBARGE	11.93	2.14	7.32	84.54	0.000	0.000	346.66	0.00	0.0000	0.0000	0.0000	0.00
19	LAYBARGE	8.89	1.76	8.52	87.60	15.590	0.000	346.53	0.00	0.0000	0.0000	0.0000	0.00
21	LAYBARGE	6.11	1.28	12.31	90.42	0.000	0.000	346.22	0.00	0.0161	0.0000	0.0161	0.00
22	LAYBARGE	3.12	0.62	12.52	93.49	33.131	0.000	344.82	-57.99	0.0160	-0.0434	0.0594	0.00
24	LAYBARGE	-6.79	-1.67	13.49	103.66	0.000	0.000	341.93	-47.68	0.0159	-0.0357	0.0516	0.00
27	STINGER	-7.54	-1.85	13.59	104.42	8.521	0.000	341.74	-54.28	0.0158	-0.0406	0.0565	0.00
29	STINGER	-16.39	-4.13	15.59	113.57	39.079	0.000	339.04	-147.00	0.0157	-0.1099	0.1257	0.00
32	STINGER	-25.82	-7.01	18.25	123.43	16.778	0.000	336.41	-103.86	0.0155	-0.0777	0.0933	0.00
34	STINGER	-36.12	-10.67	21.04	134.36	42.548	0.000	332.53	-143.15	0.0152	-0.1071	0.1225	0.00
36	STINGER	-38.93	-11.78	21.89	137.38	0.000	0.349	331.75	-80.26	0.0151	-0.0600	0.0754	0.00
38	SAGBEND	-44.96	-14.25	22.49	143.90	0.000	0.000	329.42	-1.78	0.0149	-0.0013	0.0166	0.00
39	SAGBEND	-50.56	-16.56	22.22	149.95	0.000	0.000	327.09	32.29	0.0148	0.0241	0.0393	0.00
40	SAGBEND	-56.17	-18.82	21.58	156.00	0.000	0.000	324.80	49.04	0.0146	0.0367	0.0518	0.00
41	SAGBEND	-61.81	-21.00	20.74	162.05	0.000	0.000	322.60	57.52	0.0144	0.0430	0.0580	0.00
42	SAGBEND	-67.49	-23.10	19.81	168.10	0.000	0.000	320.49	62.03	0.0143	0.0464	0.0613	0.00
43	SAGBEND	-73.19	-25.10	18.83	174.15	0.000	0.000	318.49	64.62	0.0141	0.0483	0.0631	0.00
44	SAGBEND	-78.94	-27.00	17.81	180.20	0.000	0.000	316.58	66.27	0.0140	0.0496	0.0643	0.00
45	SAGBEND	-84.71	-28.80	16.78	186.25	0.000	0.000	314.78	67.44	0.0139	0.0504	0.0651	0.00
46	SAGBEND	-90.52	-30.50	15.72	192.30	0.000	0.000	313.09	68.37	0.0137	0.0511	0.0657	0.00
47	SAGBEND	-96.36	-32.08	14.66	198.35	0.000	0.000	311.50	69.16	0.0136	0.0517	0.0662	0.00
48	SAGBEND	-102.23	-33.56	13.58	204.40	0.000	0.000	310.03	69.86	0.0135	0.0523	0.0666	0.00
49	SAGBEND	-108.12	-34.92	12.49	210.45	0.000	0.000	308.66	70.49	0.0134	0.0527	0.0671	0.00
50	SAGBEND	-114.04	-36.17	11.39	216.50	0.000	0.000	307.41	71.06	0.0133	0.0531	0.0674	0.00
51	SAGBEND	-119.98	-37.31	10.29	222.55	0.000	0.000	306.27	71.57	0.0132	0.0535	0.0677	0.00
52	SAGBEND	-125.95	-38.33	9.17	228.60	0.000	0.000	305.25	71.99	0.0131	0.0538	0.0680	0.00
53	SAGBEND	-131.93	-39.24	8.05	234.65	0.000	0.000	304.34	72.31	0.0131	0.0541	0.0682	0.00
54	SAGBEND	-137.93	-40.03	6.93	240.70	0.000	0.000	303.55	72.47	0.0130	0.0542	0.0683	0.00
55	SAGBEND	-143.94	-40.70	5.81	246.75	0.000	0.000	302.88	72.36	0.0130	0.0541	0.0682	0.00
56	SAGBEND	-149.96	-41.25	4.69	252.80	0.000	0.000	302.33	71.74	0.0129	0.0537	0.0677	0.00
57	SAGBEND	-156.00	-41.69	3.59	258.85	0.000	0.000	301.90	70.17	0.0129	0.0525	0.0665	0.00
58	SAGBEND	-162.04	-42.01	2.52	264.90	0.000	0.000	301.59	66.73	0.0129	0.0499	0.0639	0.00
59	SAGBEND	-168.08	-42.22	1.54	270.95	0.000	0.000	301.40	59.59	0.0129	0.0446	0.0586	0.00
60	SAGBEND	-174.13	-42.34	0.71	277.00	0.865	0.000	301.32	45.01	0.0129	0.0337	0.0477	0.00

S T A T I C P I P E C O O R D I N A T E S, F O R C E S A N D S T R A I N S

NODE NO.	PIPE SECTION	X COORD (M)	Y COORD (M)	VERT ANGLE (DEG)	PIPE LENGTH (M)	SUPPORT REACTION (KN)	SEPARA -TION (M)	AXIAL TENSION (KN)	BENDING MOMENT (KN-M)	TENSILE STRAIN (PCT)	BENDING STRAIN (PCT)	TOTAL STRAIN (PCT)	PERCNT ALLOW (PCT)
61	SEABED	-180.18	-42.39	0.19	283.05	5.572	0.000	301.32	21.56	0.0129	0.0161	0.0302	0.00
62	SEABED	-186.23	-42.39	0.00	289.10	7.191	0.000	301.33	5.69	0.0129	0.0043	0.0183	0.00
63	SEABED	-192.28	-42.39	-0.03	295.15	6.843	0.000	301.33	-0.18	0.0129	-0.0001	0.0142	0.00
64	SEABED	-198.33	-42.39	-0.02	301.20	6.345	0.000	301.33	-1.10	0.0129	-0.0008	0.0149	0.00
65	SEABED	-204.38	-42.39	-0.01	307.25	6.093	0.000	301.33	-0.66	0.0129	-0.0005	0.0146	0.00
66	SEABED	-210.43	-42.39	0.00	313.30	6.022	0.000	301.33	-0.22	0.0129	-0.0002	0.0143	0.00
67	SEABED	-216.48	-42.39	0.00	319.35	6.021	0.000	301.33	-0.02	0.0129	0.0000	0.0141	0.00
68	SEABED	-222.53	-42.39	0.00	325.40	6.033	0.000	301.33	0.02	0.0129	0.0000	0.0141	0.00
69	SEABED	-228.58	-42.39	0.00	331.45	6.041	0.000	301.33	0.02	0.0129	0.0000	0.0141	0.00
70	SEABED	-234.63	-42.39	0.00	337.50	6.043	0.000	301.33	0.01	0.0129	0.0000	0.0141	0.00
71	SEABED	-240.68	-42.39	0.00	343.55	6.044	0.000	301.33	0.00	0.0129	0.0000	0.0141	0.00
72	SEABED	-246.73	-42.39	0.00	349.60	6.043	0.000	301.33	0.00	0.0129	0.0000	0.0141	0.00
73	SEABED	-252.78	-42.39	0.00	355.65	6.043	0.000	301.33	0.00	0.0129	0.0000	0.0141	0.00
74	SEABED	-258.83	-42.39	0.00	361.70	6.043	0.000	301.33	0.00	0.0129	0.0000	0.0141	0.00
75	SEABED	-264.88	-42.39	0.00	367.75	6.043	0.000	301.33	0.00	0.0129	0.0000	0.0141	0.00
76	SEABED	-270.93	-42.39	0.00	373.80	0.000	0.000	301.33	0.00	0.0129	0.0000	0.0141	0.00

S T A T I C P I P E C O O R D I N A T E S, F O R C E S A N D S T R A I N S

NODE NO.	PIPE SECTION	X COORD (M)	Y COORD (M)	VERT ANGLE (DEG)	PIPE LENGTH (M)	SUPPORT REACTION (KN)	SEPARA -TION (M)	AXIAL TENSION (KN)	BENDING MOMENT (KN-M)	TENSILE STRAIN (PCT)	BENDING STRAIN (PCT)	TOTAL STRAIN (PCT)	PERCNT ALLOW (PCT)
1	LAYBARGE	96.31	6.41	1.69	0.00	0.655	0.000	0.00	0.00	0.0000	0.0000	0.0000	0.00
3	LAYBARGE	84.28	6.05	1.70	12.04	1.244	0.000	-0.04	0.00	0.0000	0.0000	0.0000	0.00
5	LAYBARGE	73.45	5.73	1.89	22.87	1.315	0.000	-0.08	0.00	0.0000	0.0000	0.0000	0.00
7	TENSIONR	60.11	5.24	2.18	36.23	1.890	0.000	346.97	0.00	0.0000	0.0000	0.0000	0.00
9	LAYBARGE	51.10	4.88	2.23	45.24	0.000	0.000	346.93	0.00	0.0000	0.0000	0.0000	0.00
10	LAYBARGE	46.45	4.71	2.11	49.89	0.000	0.006	346.91	0.00	0.0000	0.0000	0.0000	0.00
12	LAYBARGE	38.36	4.42	2.01	57.99	0.000	0.000	346.88	0.00	0.0000	0.0000	0.0000	0.00
13	LAYBARGE	35.36	4.31	2.64	60.99	8.904	0.000	346.85	0.00	0.0000	0.0000	0.0000	0.00
15	LAYBARGE	26.35	3.79	3.27	70.02	0.000	0.000	346.82	0.00	0.0000	0.0000	0.0000	0.00
16	LAYBARGE	23.33	3.62	5.30	73.04	26.018	0.000	346.57	0.00	0.0000	0.0000	0.0000	0.00
18	LAYBARGE	11.93	2.14	7.32	84.54	0.000	0.000	346.66	0.00	0.0000	0.0000	0.0000	0.00
19	LAYBARGE	8.89	1.76	9.21	87.60	23.945	0.000	346.41	0.00	0.0000	0.0000	0.0000	0.00
21	LAYBARGE	6.13	1.21	11.13	90.42	0.000	0.000	346.56	0.00	0.0000	0.0000	0.0000	0.00
22	LAYBARGE	3.11	0.62	12.07	93.49	12.302	0.000	346.44	0.00	0.0000	0.0000	0.0000	0.00
24	LAYBARGE	-6.75	-1.66	14.16	103.61	0.000	0.000	346.20	0.00	0.0161	0.0000	0.0161	0.00
27	STINGER	-7.57	-1.87	14.17	104.46	0.000	0.007	345.99	-6.50	0.0160	-0.0049	0.0210	0.00
29	STINGER	-16.42	-4.18	15.66	113.61	44.263	0.000	343.19	-147.21	0.0158	-0.1101	0.1261	0.00
32	STINGER	-25.84	-7.07	18.22	123.47	14.452	0.000	340.59	-95.32	0.0156	-0.0713	0.0871	0.00
34	STINGER	-36.16	-10.72	20.90	134.41	43.304	0.000	336.70	-143.11	0.0154	-0.1070	0.1227	0.00
36	STINGER	-38.96	-11.81	21.75	137.42	0.000	0.351	335.92	-80.24	0.0153	-0.0600	0.0756	0.00
38	SAGBEND	-44.93	-14.24	22.35	143.86	0.000	0.000	333.63	-2.52	0.0151	-0.0019	0.0174	0.00
39	SAGBEND	-50.53	-16.53	22.09	149.91	0.000	0.000	331.32	31.68	0.0150	0.0237	0.0391	0.00
40	SAGBEND	-56.15	-18.78	21.46	155.96	0.000	0.000	329.05	48.41	0.0148	0.0362	0.0515	0.00
41	SAGBEND	-61.79	-20.95	20.63	162.01	0.000	0.000	326.86	56.83	0.0146	0.0425	0.0577	0.00
42	SAGBEND	-67.47	-23.04	19.72	168.06	0.000	0.000	324.76	61.28	0.0145	0.0458	0.0609	0.00
43	SAGBEND	-73.18	-25.03	18.74	174.11	0.000	0.000	322.76	63.81	0.0143	0.0477	0.0627	0.00
44	SAGBEND	-78.93	-26.93	17.74	180.16	0.000	0.000	320.87	65.42	0.0142	0.0489	0.0638	0.00
45	SAGBEND	-84.71	-28.72	16.72	186.21	0.000	0.000	319.07	66.57	0.0141	0.0498	0.0646	0.00
46	SAGBEND	-90.52	-30.41	15.68	192.26	0.000	0.000	317.38	67.47	0.0139	0.0505	0.0652	0.00
47	SAGBEND	-96.36	-31.99	14.62	198.31	0.000	0.000	315.80	68.24	0.0138	0.0510	0.0657	0.00
48	SAGBEND	-102.22	-33.46	13.56	204.36	0.000	0.000	314.33	68.92	0.0137	0.0515	0.0661	0.00
49	SAGBEND	-108.12	-34.83	12.49	210.41	0.000	0.000	312.97	69.53	0.0136	0.0520	0.0665	0.00
50	SAGBEND	-114.04	-36.08	11.40	216.46	0.000	0.000	311.71	70.09	0.0135	0.0524	0.0669	0.00
51	SAGBEND	-119.98	-37.22	10.31	222.51	0.000	0.000	310.57	70.58	0.0134	0.0528	0.0672	0.00
52	SAGBEND	-125.94	-38.24	9.22	228.56	0.000	0.000	309.55	71.00	0.0134	0.0531	0.0675	0.00
53	SAGBEND	-131.92	-39.16	8.11	234.61	0.000	0.000	308.64	71.33	0.0133	0.0533	0.0677	0.00
54	SAGBEND	-137.92	-39.95	7.00	240.66	0.000	0.000	307.84	71.51	0.0132	0.0535	0.0678	0.00
55	SAGBEND	-143.93	-40.63	5.90	246.71	0.000	0.000	307.16	71.45	0.0132	0.0534	0.0677	0.00
56	SAGBEND	-149.95	-41.19	4.79	252.76	0.000	0.000	306.60	70.94	0.0131	0.0531	0.0673	0.00
57	SAGBEND	-155.99	-41.64	3.70	258.81	0.000	0.000	306.16	69.58	0.0131	0.0520	0.0663	0.00
58	SAGBEND	-162.03	-41.98	2.64	264.86	0.000	0.000	305.83	66.56	0.0131	0.0498	0.0640	0.00
59	SAGBEND	-168.07	-42.20	1.65	270.91	0.000	0.000	305.63	60.23	0.0131	0.0450	0.0592	0.00
60	SAGBEND	-174.12	-42.33	0.81	276.96	0.483	0.000	305.53	47.24	0.0131	0.0353	0.0495	0.00

S T A T I C P I P E C O O R D I N A T E S, F O R C E S A N D S T R A I N S

NODE NO.	PIPE SECTION	X COORD (M)	Y COORD (M)	VERT ANGLE (DEG)	PIPE LENGTH (M)	SUPPORT REACTION (KN)	SEPARA -TION (M)	AXIAL TENSION (KN)	BENDING MOMENT (KN-M)	TENSILE STRAIN (PCT)	BENDING STRAIN (PCT)	TOTAL STRAIN (PCT)	PERCNT ALLOW (PCT)
61	SEABED	-180.17	-42.38	0.24	283.01	4.965	0.000	305.53	24.47	0.0131	0.0183	0.0325	0.00
62	SEABED	-186.22	-42.39	0.01	289.06	7.126	0.000	305.54	7.18	0.0131	0.0054	0.0196	0.00
63	SEABED	-192.27	-42.39	-0.03	295.11	6.910	0.000	305.54	0.26	0.0131	0.0002	0.0145	0.00
64	SEABED	-198.32	-42.39	-0.02	301.16	6.398	0.000	305.54	-1.08	0.0131	-0.0008	0.0151	0.00
65	SEABED	-204.37	-42.39	-0.01	307.21	6.115	0.000	305.54	-0.72	0.0131	-0.0005	0.0148	0.00
66	SEABED	-210.42	-42.39	0.00	313.26	6.027	0.000	305.54	-0.26	0.0131	-0.0002	0.0145	0.00
67	SEABED	-216.47	-42.39	0.00	319.31	6.020	0.000	305.54	-0.04	0.0131	0.0000	0.0143	0.00
68	SEABED	-222.52	-42.39	0.00	325.36	6.032	0.000	305.54	0.02	0.0131	0.0000	0.0143	0.00
69	SEABED	-228.57	-42.39	0.00	331.41	6.040	0.000	305.54	0.02	0.0131	0.0000	0.0143	0.00
70	SEABED	-234.62	-42.39	0.00	337.46	6.043	0.000	305.54	0.01	0.0131	0.0000	0.0143	0.00
71	SEABED	-240.67	-42.39	0.00	343.51	6.044	0.000	305.54	0.00	0.0131	0.0000	0.0143	0.00
72	SEABED	-246.72	-42.39	0.00	349.56	6.043	0.000	305.54	0.00	0.0131	0.0000	0.0143	0.00
73	SEABED	-252.77	-42.39	0.00	355.61	6.043	0.000	305.54	0.00	0.0131	0.0000	0.0143	0.00
74	SEABED	-258.82	-42.39	0.00	361.66	6.043	0.000	305.54	0.00	0.0131	0.0000	0.0143	0.00
75	SEABED	-264.87	-42.39	0.00	367.71	6.043	0.000	305.54	0.00	0.0131	0.0000	0.0143	0.00
76	SEABED	-270.92	-42.39	0.00	373.76	0.000	0.000	305.54	0.00	0.0131	0.0000	0.0143	0.00

S T A T I C P I P E C O O R D I N A T E S, F O R C E S A N D S T R A I N S

NODE NO.	PIPE SECTION	X COORD (M)	Y COORD (M)	VERT ANGLE (DEG)	PIPE LENGTH (M)	SUPPORT REACTION (KN)	SEPARA -TION (M)	AXIAL TENSION (KN)	BENDING MOMENT (KN-M)	TENSILE STRAIN (PCT)	BENDING STRAIN (PCT)	TOTAL STRAIN (PCT)	PERCNT ALLOW (PCT)
1	LAYBARGE	96.31	6.41	1.69	0.00	0.655	0.000	0.00	0.00	0.0000	0.0000	0.0000	0.00
3	LAYBARGE	84.28	6.05	1.70	12.04	1.244	0.000	-0.04	0.00	0.0000	0.0000	0.0000	0.00
5	LAYBARGE	73.45	5.73	1.89	22.87	1.315	0.000	-0.08	0.00	0.0000	0.0000	0.0000	0.00

7	TENSIONR	60.11	5.24	2.19	36.23	1.872	0.000	320.67	0.00	0.0000	0.0000	0.0000	0.00
9	LAYBARGE	51.10	4.88	2.24	45.24	0.000	0.000	320.64	0.00	0.0000	0.0000	0.0000	0.00
10	LAYBARGE	46.45	4.71	2.11	49.89	0.000	0.004	320.62	0.00	0.0000	0.0000	0.0000	0.00
12	LAYBARGE	38.36	4.42	2.00	57.99	0.000	0.000	320.58	0.00	0.0000	0.0000	0.0000	0.00
13	LAYBARGE	35.36	4.31	2.63	60.99	8.380	0.000	320.55	0.00	0.0000	0.0000	0.0000	0.00
15	LAYBARGE	26.35	3.79	3.26	70.02	0.000	0.000	320.52	0.00	0.0000	0.0000	0.0000	0.00
16	LAYBARGE	23.33	3.62	5.30	73.04	24.154	0.000	320.28	0.00	0.0000	0.0000	0.0000	0.00
18	LAYBARGE	11.93	2.14	7.32	84.54	0.000	0.000	320.36	0.00	0.0000	0.0000	0.0000	0.00
19	LAYBARGE	8.89	1.76	9.20	87.60	22.212	0.000	320.12	0.00	0.0000	0.0000	0.0000	0.00
21	LAYBARGE	6.17	1.22	11.14	90.37	0.000	0.000	320.26	0.00	0.0000	0.0000	0.0000	0.00
22	LAYBARGE	3.11	0.62	12.90	93.49	20.645	0.000	320.03	0.00	0.0000	0.0000	0.0000	0.00
24	LAYBARGE	-6.68	-1.95	17.69	103.62	0.000	0.000	319.49	0.00	0.0148	0.0000	0.0149	0.00
27	STINGER	-7.54	-2.22	17.71	104.52	16.529	0.000	319.21	-15.74	0.0148	-0.0118	0.0266	0.00
29	STINGER	-16.23	-5.05	18.69	113.66	28.043	0.000	316.21	-88.40	0.0146	-0.0661	0.0808	0.00
32	STINGER	-25.51	-8.34	20.17	123.50	10.165	0.000	313.03	-57.13	0.0143	-0.0427	0.0573	0.00
34	STINGER	-35.71	-12.24	21.92	134.43	34.794	0.000	308.96	-103.51	0.0140	-0.0774	0.0918	0.00
36	STINGER	-38.50	-13.38	22.52	137.44	0.000	0.382	308.00	-53.00	0.0140	-0.0396	0.0540	0.00
38	SAGBEND	-44.42	-15.87	22.80	143.86	0.000	0.000	305.58	10.95	0.0138	0.0082	0.0224	0.00
39	SAGBEND	-50.01	-18.19	22.37	149.91	0.000	0.000	303.22	40.28	0.0136	0.0301	0.0442	0.00
40	SAGBEND	-55.62	-20.46	21.62	155.96	0.000	0.000	300.93	55.21	0.0134	0.0413	0.0553	0.00
41	SAGBEND	-61.26	-22.65	20.70	162.01	0.000	0.000	298.72	63.06	0.0133	0.0472	0.0610	0.00
42	SAGBEND	-66.93	-24.73	19.68	168.06	0.000	0.000	296.62	67.43	0.0131	0.0504	0.0642	0.00
43	SAGBEND	-72.65	-26.72	18.61	174.11	0.000	0.000	294.63	70.06	0.0130	0.0524	0.0661	0.00
44	SAGBEND	-78.40	-28.59	17.51	180.16	0.000	0.000	292.75	71.80	0.0128	0.0537	0.0673	0.00
45	SAGBEND	-84.19	-30.36	16.39	186.21	0.000	0.000	290.99	73.09	0.0127	0.0547	0.0682	0.00
46	SAGBEND	-90.01	-32.01	15.25	192.26	0.000	0.000	289.34	74.13	0.0126	0.0554	0.0689	0.00
47	SAGBEND	-95.86	-33.54	14.09	198.31	0.000	0.000	287.80	75.01	0.0125	0.0561	0.0695	0.00
48	SAGBEND	-101.74	-34.95	12.92	204.36	0.000	0.000	286.39	75.79	0.0124	0.0567	0.0700	0.00
49	SAGBEND	-107.65	-36.24	11.74	210.41	0.000	0.000	285.10	76.47	0.0123	0.0572	0.0704	0.00
50	SAGBEND	-113.59	-37.41	10.55	216.46	0.000	0.000	283.93	77.06	0.0122	0.0576	0.0708	0.00
51	SAGBEND	-119.55	-38.46	9.35	222.51	0.000	0.000	282.88	77.54	0.0121	0.0580	0.0711	0.00
52	SAGBEND	-125.53	-39.38	8.14	228.56	0.000	0.000	281.96	77.87	0.0120	0.0582	0.0713	0.00
53	SAGBEND	-131.53	-40.17	6.94	234.61	0.000	0.000	281.17	77.95	0.0120	0.0583	0.0713	0.00
54	SAGBEND	-137.54	-40.84	5.73	240.66	0.000	0.000	280.50	77.62	0.0119	0.0581	0.0711	0.00
55	SAGBEND	-143.57	-41.38	4.53	246.71	0.000	0.000	279.97	76.54	0.0119	0.0572	0.0702	0.00
56	SAGBEND	-149.60	-41.80	3.36	252.76	0.000	0.000	279.56	74.06	0.0119	0.0554	0.0684	0.00
57	SAGBEND	-155.64	-42.09	2.25	258.81	0.000	0.000	279.28	68.89	0.0118	0.0515	0.0645	0.00
58	SAGBEND	-161.69	-42.28	1.25	264.86	0.011	0.000	279.13	58.52	0.0118	0.0438	0.0567	0.00
59	SEABED	-167.74	-42.37	0.48	270.91	2.612	0.000	279.09	38.15	0.0118	0.0285	0.0415	0.00

S T A T I C P I P E C O O R D I N A T E S, F O R C E S A N D S T R A I N S

NODE NO.	PIPE SECTION	X COORD (M)	Y COORD (M)	VERT ANGLE (DEG)	PIPE LENGTH (M)	SUPPORT REACTION (KN)	SEPARA -TION (M)	AXIAL TENSION (KN)	BENDING MOMENT (KN-M)	TENSILE STRAIN (PCT)	BENDING STRAIN (PCT)	TOTAL STRAIN (PCT)	PERCNT ALLOW (PCT)
60	SEABED	-173.79	-42.39	0.09	276.96	6.808	0.000	279.11	14.63	0.0118	0.0109	0.0239	0.00
61	SEABED	-179.84	-42.39	-0.03	283.01	7.250	0.000	279.11	2.47	0.0118	0.0018	0.0149	0.00
62	SEABED	-185.89	-42.39	-0.03	289.06	6.664	0.000	279.11	-1.02	0.0118	-0.0008	0.0138	0.00
63	SEABED	-191.94	-42.39	-0.02	295.11	6.220	0.000	279.11	-1.07	0.0118	-0.0008	0.0139	0.00
64	SEABED	-197.99	-42.39	0.00	301.16	6.045	0.000	279.11	-0.49	0.0118	-0.0004	0.0134	0.00
65	SEABED	-204.04	-42.39	0.00	307.21	6.013	0.000	279.11	-0.12	0.0118	-0.0001	0.0132	0.00
66	SEABED	-210.09	-42.39	0.00	313.26	6.024	0.000	279.11	0.01	0.0118	0.0000	0.0131	0.00
67	SEABED	-216.14	-42.39	0.00	319.31	6.036	0.000	279.11	0.03	0.0118	0.0000	0.0131	0.00
68	SEABED	-222.19	-42.39	0.00	325.36	6.042	0.000	279.11	0.02	0.0118	0.0000	0.0131	0.00
69	SEABED	-228.24	-42.39	0.00	331.41	6.044	0.000	279.11	0.00	0.0118	0.0000	0.0131	0.00
70	SEABED	-234.29	-42.39	0.00	337.46	6.044	0.000	279.11	0.00	0.0118	0.0000	0.0131	0.00
71	SEABED	-240.34	-42.39	0.00	343.51	6.043	0.000	279.11	0.00	0.0118	0.0000	0.0131	0.00
72	SEABED	-246.39	-42.39	0.00	349.56	6.043	0.000	279.11	0.00	0.0118	0.0000	0.0131	0.00
73	SEABED	-252.44	-42.39	0.00	355.61	6.043	0.000	279.11	0.00	0.0118	0.0000	0.0131	0.00
74	SEABED	-258.49	-42.39	0.00	361.66	6.043	0.000	279.11	0.00	0.0118	0.0000	0.0131	0.00
75	SEABED	-264.54	-42.39	0.00	367.71	0.000	0.000	279.11	0.00	0.0118	0.0000	0.0131	0.00

S T A T I C P I P E C O O R D I N A T E S, F O R C E S A N D S T R A I N S

NODE NO.	PIPE SECTION	X COORD (M)	Y COORD (M)	VERT ANGLE (DEG)	PIPE LENGTH (M)	SUPPORT REACTION (KN)	SEPARA -TION (M)	AXIAL TENSION (KN)	BENDING MOMENT (KN-M)	TENSILE STRAIN (PCT)	BENDING STRAIN (PCT)	TOTAL STRAIN (PCT)	PERCNT ALLOW (PCT)
1	LAYBARGE	96.31	6.41	1.69	0.00	0.655	0.000	0.00	0.00	0.0000	0.0000	0.0000	0.00
3	LAYBARGE	84.28	6.05	1.70	12.04	1.244	0.000	-0.04	0.00	0.0000	0.0000	0.0000	0.00
5	LAYBARGE	73.45	5.73	1.89	22.87	1.315	0.000	-0.08	0.00	0.0000	0.0000	0.0000	0.00
7	TENSIONR	60.11	5.24	2.19	36.23	1.872	0.000	320.67	0.00	0.0000	0.0000	0.0000	0.00
9	LAYBARGE	51.10	4.88	2.24	45.24	0.000	0.000	320.64	0.00	0.0000	0.0000	0.0000	0.00
10	LAYBARGE	46.45	4.71	2.11	49.89	0.000	0.004	320.62	0.00	0.0000	0.0000	0.0000	0.00
12	LAYBARGE	38.36	4.42	2.00	57.99	0.000	0.000	320.59	0.00	0.0000	0.0000	0.0000	0.00
13	LAYBARGE	35.36	4.31	2.63	60.99	8.380	0.000	320.55	0.00	0.0000	0.0000	0.0000	0.00
15	LAYBARGE	26.35	3.79	3.26	70.02	0.000	0.000	320.52	0.00	0.0000	0.0000	0.0000	0.00
16	LAYBARGE	23.33	3.62	5.30	73.04	24.154	0.000	320.28	0.00	0.0000	0.0000	0.0000	0.00
18	LAYBARGE	11.93	2.14	7.32	84.54	0.000	0.000	320.36	0.00	0.0000	0.0000	0.0000	0.00
19	LAYBARGE	8.89	1.76	9.20	87.60	22.213	0.000	320.13	0.00	0.0000	0.0000	0.0000	0.00
21	LAYBARGE	6.13	1.21	11.14	90.42	0.000	0.000	320.26	0.00	0.0000	0.0000	0.0000	0.00
22	LAYBARGE	3.11	0.62	13.03	93.49	22.177	0.000	320.01	0.00	0.0000	0.0000	0.0000	0.00
24	LAYBARGE	-6.67	-1.99	14.91	103.61	0.000	0.000	319.95	0.00	0.0000	0.0000	0.0000	0.00
27	STINGER	-7.53	-2.22	17.86	104.51	12.470	0.000	319.49	0.00	0.0148	0.0000	0.0149	0.00
29	STINGER	-16.23	-5.06	18.69	113.66	30.330	0.000	316.47	-90.59	0.0146	-0.0678	0.0825	0.00
32	STINGER	-25.50	-8.35	20.17	123.50	9.311	0.000	313.30	-54.83	0.0143	-0.0410	0.0556	0.00
34	STINGER	-35.71	-12.25	21.90	134.43	35.067	0.000	309.23	-103.91	0.0140	-0.0777	0.0921	0.00
36	STINGER	-38.49	-13.39	22.50	137.43	0.000	0.382	308.27	-53.28	0.0140	-0.0398	0.0542	0.00
38	SAGBEND	-44.34	-15.84	22.78	143.77	0.000	0.000	305.89	10.24	0.0138	0.0077	0.0219	0.00
39	SAGBEND	-49.93	-18.17	22.37	149.82	0.000	0.000	303.53	39.90	0.0136	0.0298	0.0439	0.00
40	SAGBEND	-55.53	-20.43	21.62	155.87	0.000	0.000	301.23	54.99	0.0135	0.0411	0.0551	0.00
41	SAGBEND	-61.18	-22.62	20.70	161.92	0.000	0.000	299.03	62.92	0.0133	0.0471	0.0609	0.00
42	SAGBEND	-66.85	-24.71	19.69	167.97	0.000	0.000	296.93	67.32	0.0131	0.0503	0.0641	0.00
43	SAGBEND	-72.57	-26.69	18.62	174.02	0.000	0.000	294.94	69.96	0.0130	0.0523	0.0660	0.00
44	SAGBEND	-78.32	-28.57	17.52	180.07	0.000	0.000	293.06	71.72	0.0128	0.0536	0.0672	0.00
45	SAGBEND	-84.11	-30.33	16.40	186.12	0.000	0.000	291.29	73.01	0.0127	0.0546	0.0681	0.00
46	SAGBEND	-89.93	-31.98	15.26	192.17	0.000	0.000	289.64	74.04	0.0126	0.0554	0.0688	0.00
47	SAGBEND	-95.78	-33.52	14.10	198.22	0.000	0.000	288.11	74.93	0.0125	0.0560	0.0694	0.00
48	SAGBEND	-101.66	-34.93	12.93	204.27	0.000	0.000	286.69	75.70	0.0124	0.0566	0.0699	0.00
49	SAGBEND	-107.57	-36.22	11.75	210.32	0.000	0.000	285.40	76.39	0.0123	0.0571	0.0704	0.00
50	SAGBEND	-113.51	-37.40	10.56	216.37	0.000	0.000	284.23	76.98	0.0122	0.0576	0.0708	0.00
51	SAGBEND	-119.47	-38.44	9.37	222.42	0.000	0.000	283.18	77.46	0.0121	0.0579	0.0711	0.00
52	SAGBEND	-125.45	-39.36	8.16	228.47	0.000	0.000	282.26	77.79	0.0121	0.0582	0.0713	0.00
53	SAGBEND	-131.44	-40.16	6.96	234.52	0.000	0.000	281.46	77.88	0.0120	0.0582	0.0713	0.00
54	SAGBEND	-137.46	-40.83	5.75	240.57	0.000	0.000	280.79	77.56	0.0119	0.0580	0.0710	0.00
55	SAGBEND	-143.48	-41.37	4.55	246.62	0.000	0.000	280.26	76.50	0.0119	0.0572	0.0702	0.00
56	SAGBEND	-149.52	-41.79	3.38	252.67	0.000	0.000	279.85	74.07	0.0119	0.0554	0.0684	0.00
57	SAGBEND	-155.56	-42.09	2.27	258.72	0.000	0.000	279.56	68.98	0.0119	0.0516	0.0646	0.00
58	SAGBEND	-161.61	-42.27	1.27	264.77	0.008	0.000	279.41	58.76	0.0118	0.0439	0.0569	0.00
59	SEABED	-167.66	-42.36	0.50	270.82	2.501	0.000	279.37	38.66	0.0118	0.0289	0.0419	0.00

S T A T I C P I P E C O O R D I N A T E S, F O R C E S A N D S T R A I N S

NODE NO.	PIPE SECTION	X COORD (M)	Y COORD (M)	VERT ANGLE (DEG)	PIPE LENGTH (M)	SUPPORT REACTION (KN)	SEPARA -TION (M)	AXIAL TENSION (KN)	BENDING MOMENT (KN-M)	TENSILE STRAIN (PCT)	BENDING STRAIN (PCT)	TOTAL STRAIN (PCT)	PERCNT ALLOW (PCT)
60	SEABED	-173.71	-42.39	0.09	276.87	6.767	0.000	279.39	15.00	0.0118	0.0112	0.0242	0.00
61	SEABED	-179.76	-42.39	-0.03	282.92	7.257	0.000	279.39	2.61	0.0118	0.0020	0.0150	0.00
62	SEABED	-185.81	-42.39	-0.03	288.97	6.676	0.000	279.39	-1.00	0.0118	-0.0007	0.0138	0.00
63	SEABED	-191.86	-42.39	-0.02	295.02	6.226	0.000	279.39	-1.08	0.0118	-0.0008	0.0139	0.00
64	SEABED	-197.91	-42.39	0.00	301.07	6.047	0.000	279.39	-0.50	0.0118	-0.0004	0.0135	0.00
65	SEABED	-203.96	-42.39	0.00	307.12	6.013	0.000	279.39	-0.12	0.0118	-0.0001	0.0132	0.00
66	SEABED	-210.01	-42.39	0.00	313.17	6.024	0.000	279.39	0.01	0.0118	0.0000	0.0131	0.00
67	SEABED	-216.06	-42.39	0.00	319.22	6.036	0.000	279.39	0.03	0.0118	0.0000	0.0131	0.00
68	SEABED	-222.11	-42.39	0.00	325.27	6.042	0.000	279.39	0.02	0.0118	0.0000	0.0131	0.00
69	SEABED	-228.16	-42.39	0.00	331.32	6.044	0.000	279.39	0.00	0.0118	0.0000	0.0131	0.00
70	SEABED	-234.21	-42.39	0.00	337.37	6.044	0.000	279.39	0.00	0.0118	0.0000	0.0131	0.00
71	SEABED	-240.26	-42.39	0.00	343.42	6.043	0.000	279.39	0.00	0.0118	0.0000	0.0131	0.00
72	SEABED	-246.31	-42.39	0.00	349.47	6.043	0.000	279.39	0.00	0.0118	0.0000	0.0131	0.00
73	SEABED	-252.36	-42.39	0.00	355.52	6.043	0.000	279.39	0.00	0.0118	0.0000	0.0131	0.00
74	SEABED	-258.41	-42.39	0.00	361.57	6.043	0.000	279.39	0.00	0.0118	0.0000	0.0131	0.00
75	SEABED	-264.46	-42.39	0.00	367.62	0.000	0.000	279.39	0.00	0.0118	0.0000	0.0131	0.00

S T A T I C P I P E C O O R D I N A T E S, F O R C E S A N D S T R A I N S

NODE	PIPE	X	Y	VERT	PIPE	SUPPORT	SEPARA	AXIAL	BENDING	TENSILE	BENDING	TOTAL	PERCNT

NO.	SECTION	COORD (M)	COORD (M)	ANGLE (DEG)	LENGTH (M)	REACTION (KN)	-TION (M)	TENSION (KN)	MOMENT (KN-M)	STRAIN (PCT)	STRAIN (PCT)	STRAIN (PCT)	ALLOW (PCT)
1	LAYBARGE	96.31	6.41	1.69	0.00	0.655	0.000	0.00	0.00	0.0000	0.0000	0.0000	0.00
3	LAYBARGE	84.28	6.05	1.70	12.04	1.244	0.000	-0.04	0.00	0.0000	0.0000	0.0000	0.00
5	LAYBARGE	73.45	5.73	1.89	22.87	1.315	0.000	-0.08	0.00	0.0000	0.0000	0.0000	0.00
7	TENSIONR	60.11	5.24	2.19	36.23	1.867	0.000	314.37	0.00	0.0000	0.0000	0.0000	0.00
9	LAYBARGE	51.10	4.88	2.24	45.24	0.000	0.000	314.34	0.00	0.0000	0.0000	0.0000	0.00
10	LAYBARGE	46.45	4.71	2.11	49.89	0.000	0.004	314.32	0.00	0.0000	0.0000	0.0000	0.00
12	LAYBARGE	38.36	4.42	1.99	57.99	0.000	0.000	314.29	0.00	0.0000	0.0000	0.0000	0.00
13	LAYBARGE	35.36	4.31	2.63	60.99	8.255	0.000	314.25	0.00	0.0000	0.0000	0.0000	0.00
15	LAYBARGE	26.35	3.79	3.26	70.02	0.000	0.000	314.22	0.00	0.0000	0.0000	0.0000	0.00
16	LAYBARGE	23.33	3.62	5.30	73.04	23.708	0.000	313.99	0.00	0.0000	0.0000	0.0000	0.00
18	LAYBARGE	11.93	2.14	7.31	84.54	0.000	0.000	314.06	0.00	0.0000	0.0000	0.0000	0.00
19	LAYBARGE	8.89	1.76	9.20	87.60	21.798	0.000	313.83	0.00	0.0000	0.0000	0.0000	0.00
21	LAYBARGE	6.13	1.21	11.13	90.42	0.000	0.000	313.96	0.00	0.0000	0.0000	0.0000	0.00
22	LAYBARGE	3.11	0.62	13.06	93.49	22.036	0.000	313.71	0.00	0.0000	0.0000	0.0000	0.00
24	LAYBARGE	-6.66	-2.00	14.96	103.61	0.000	0.000	313.65	0.00	0.0000	0.0000	0.0000	0.00
27	STINGER	-7.53	-2.23	17.95	104.51	12.247	0.000	313.18	0.00	0.0145	0.0000	0.0146	0.00
29	STINGER	-16.22	-5.09	18.80	113.66	30.502	0.000	310.14	-91.87	0.0143	-0.0687	0.0831	0.00
32	STINGER	-25.49	-8.39	20.31	123.50	9.189	0.000	306.96	-55.51	0.0140	-0.0415	0.0558	0.00
34	STINGER	-35.69	-12.32	22.06	134.43	35.086	0.000	302.86	-104.78	0.0138	-0.0784	0.0924	0.00
36	STINGER	-38.47	-13.47	22.66	137.43	0.000	0.382	301.90	-53.94	0.0137	-0.0403	0.0544	0.00
38	SAGBEND	-44.31	-15.93	22.95	143.77	0.000	0.000	299.50	10.18	0.0135	0.0076	0.0215	0.00
39	SAGBEND	-49.88	-18.28	22.54	149.82	0.000	0.000	297.12	40.38	0.0133	0.0302	0.0440	0.00
40	SAGBEND	-55.49	-20.56	21.78	155.87	0.000	0.000	294.81	55.86	0.0132	0.0418	0.0555	0.00
41	SAGBEND	-61.12	-22.76	20.84	161.92	0.000	0.000	292.59	64.06	0.0130	0.0479	0.0615	0.00
42	SAGBEND	-66.80	-24.86	19.81	167.97	0.000	0.000	290.48	68.64	0.0128	0.0513	0.0648	0.00
43	SAGBEND	-72.51	-26.86	18.72	174.02	0.000	0.000	288.47	71.41	0.0127	0.0534	0.0668	0.00
44	SAGBEND	-78.25	-28.74	17.60	180.07	0.000	0.000	286.59	73.26	0.0125	0.0548	0.0681	0.00
45	SAGBEND	-84.04	-30.52	16.45	186.12	0.000	0.000	284.81	74.62	0.0124	0.0558	0.0690	0.00
46	SAGBEND	-89.86	-32.17	15.28	192.17	0.000	0.000	283.16	75.71	0.0123	0.0566	0.0698	0.00
47	SAGBEND	-95.71	-33.70	14.10	198.22	0.000	0.000	281.62	76.64	0.0122	0.0573	0.0704	0.00
48	SAGBEND	-101.59	-35.12	12.91	204.27	0.000	0.000	280.21	77.44	0.0121	0.0579	0.0709	0.00
49	SAGBEND	-107.50	-36.41	11.70	210.32	0.000	0.000	278.91	78.15	0.0120	0.0585	0.0714	0.00
50	SAGBEND	-113.44	-37.57	10.48	216.37	0.000	0.000	277.75	78.76	0.0119	0.0589	0.0718	0.00
51	SAGBEND	-119.40	-38.61	9.26	222.42	0.000	0.000	276.71	79.24	0.0118	0.0593	0.0721	0.00
52	SAGBEND	-125.38	-39.52	8.03	228.47	0.000	0.000	275.80	79.53	0.0117	0.0595	0.0723	0.00
53	SAGBEND	-131.38	-40.30	6.79	234.52	0.000	0.000	275.02	79.54	0.0117	0.0595	0.0723	0.00
54	SAGBEND	-137.40	-40.95	5.56	240.57	0.000	0.000	274.38	79.06	0.0116	0.0591	0.0719	0.00
55	SAGBEND	-143.42	-41.47	4.35	246.62	0.000	0.000	273.86	77.68	0.0116	0.0581	0.0708	0.00
56	SAGBEND	-149.46	-41.87	3.16	252.67	0.000	0.000	273.47	74.64	0.0116	0.0558	0.0685	0.00
57	SAGBEND	-155.50	-42.14	2.05	258.72	0.000	0.000	273.22	68.40	0.0116	0.0512	0.0638	0.00
58	SAGBEND	-161.55	-42.30	1.07	264.77	0.111	0.000	273.09	56.00	0.0115	0.0419	0.0546	0.00
59	SEABED	-167.60	-42.38	0.37	270.82	3.860	0.000	273.07	32.81	0.0115	0.0245	0.0372	0.00

S T A T I C P I P E C O O R D I N A T E S, F O R C E S A N D S T R A I N S

NODE NO.	PIPE SECTION	X COORD (M)	Y COORD (M)	VERT ANGLE (DEG)	PIPE LENGTH (M)	SUPPORT REACTION (KN)	SEPARA -TION (M)	AXIAL TENSION (KN)	BENDING MOMENT (KN-M)	TENSILE STRAIN (PCT)	BENDING STRAIN (PCT)	TOTAL STRAIN (PCT)	PERCNT ALLOW (PCT)
60	SEABED	-173.65	-42.39	0.04	276.87	7.172	0.000	273.09	11.02	0.0115	0.0082	0.0210	0.00
61	SEABED	-179.70	-42.39	-0.04	282.92	7.167	0.000	273.10	1.13	0.0115	0.0008	0.0136	0.00
62	SEABED	-185.75	-42.39	-0.03	288.97	6.548	0.000	273.10	-1.23	0.0115	-0.0009	0.0137	0.00
63	SEABED	-191.80	-42.39	-0.01	295.02	6.161	0.000	273.10	-0.97	0.0115	-0.0007	0.0135	0.00
64	SEABED	-197.85	-42.39	0.00	301.07	6.028	0.000	273.10	-0.39	0.0115	-0.0003	0.0131	0.00
65	SEABED	-203.90	-42.39	0.00	307.12	6.013	0.000	273.10	-0.07	0.0115	-0.0001	0.0128	0.00
66	SEABED	-209.95	-42.39	0.00	313.17	6.027	0.000	273.10	0.02	0.0115	0.0000	0.0128	0.00
67	SEABED	-216.00	-42.39	0.00	319.22	6.038	0.000	273.10	0.03	0.0115	0.0000	0.0128	0.00
68	SEABED	-222.05	-42.39	0.00	325.27	6.043	0.000	273.10	0.01	0.0115	0.0000	0.0128	0.00
69	SEABED	-228.10	-42.39	0.00	331.32	6.044	0.000	273.10	0.00	0.0115	0.0000	0.0128	0.00
70	SEABED	-234.15	-42.39	0.00	337.37	6.044	0.000	273.10	0.00	0.0115	0.0000	0.0128	0.00
71	SEABED	-240.20	-42.39	0.00	343.42	6.043	0.000	273.10	0.00	0.0115	0.0000	0.0128	0.00
72	SEABED	-246.25	-42.39	0.00	349.47	6.043	0.000	273.10	0.00	0.0115	0.0000	0.0128	0.00
73	SEABED	-252.30	-42.39	0.00	355.52	6.043	0.000	273.10	0.00	0.0115	0.0000	0.0128	0.00
74	SEABED	-258.35	-42.39	0.00	361.57	6.043	0.000	273.10	0.00	0.0115	0.0000	0.0128	0.00
75	SEABED	-264.40	-42.39	0.00	367.62	0.000	0.000	273.10	0.00	0.0115	0.0000	0.0128	0.00

S T A T I C P I P E C O O R D I N A T E S, F O R C E S A N D S T R A I N S

NODE NO.	PIPE SECTION	X COORD (M)	Y COORD (M)	VERT ANGLE (DEG)	PIPE LENGTH (M)	SUPPORT REACTION (KN)	SEPARA -TION (M)	AXIAL TENSION (KN)	BENDING MOMENT (KN-M)	TENSILE STRAIN (PCT)	BENDING STRAIN (PCT)	TOTAL STRAIN (PCT)	PERCNT ALLOW (PCT)
1	LAYBARGE	96.31	6.41	1.69	0.00	0.655	0.000	0.00	0.00	0.0000	0.0000	0.0000	0.00
3	LAYBARGE	84.28	6.05	1.70	12.04	1.244	0.000	-0.04	0.00	0.0000	0.0000	0.0000	0.00
5	LAYBARGE	73.45	5.73	1.89	22.87	1.315	0.000	-0.08	0.00	0.0000	0.0000	0.0000	0.00
7	TENSIONR	60.11	5.24	2.19	36.23	1.867	0.000	314.38	0.00	0.0000	0.0000	0.0000	0.00
9	LAYBARGE	51.10	4.88	2.24	45.24	0.000	0.000	314.34	0.00	0.0000	0.0000	0.0000	0.00
10	LAYBARGE	46.45	4.71	2.11	49.89	0.000	0.004	314.32	0.00	0.0000	0.0000	0.0000	0.00
12	LAYBARGE	38.36	4.42	1.99	57.99	0.000	0.000	314.29	0.00	0.0000	0.0000	0.0000	0.00
13	LAYBARGE	35.36	4.31	2.63	60.99	8.255	0.000	314.26	0.00	0.0000	0.0000	0.0000	0.00
15	LAYBARGE	26.35	3.79	3.26	70.02	0.000	0.000	314.23	0.00	0.0000	0.0000	0.0000	0.00
16	LAYBARGE	23.33	3.62	5.30	73.04	23.707	0.000	313.99	0.00	0.0000	0.0000	0.0000	0.00
18	LAYBARGE	11.93	2.14	7.31	84.54	0.000	0.000	314.07	0.00	0.0000	0.0000	0.0000	0.00
19	LAYBARGE	8.90	1.76	9.20	87.60	21.795	0.000	313.84	0.00	0.0000	0.0000	0.0000	0.00
21	LAYBARGE	6.13	1.21	11.13	90.42	0.000	0.000	313.97	0.00	0.0000	0.0000	0.0000	0.00
22	LAYBARGE	3.11	0.62	12.73	93.49	18.444	0.000	313.77	0.00	0.0000	0.0000	0.0000	0.00
24	LAYBARGE	-6.69	-1.89	14.31	103.61	0.000	0.000	313.66	0.00	0.0000	0.0000	0.0000	0.00
27	STINGER	-7.55	-2.11	15.59	104.50	15.003	0.000	313.56	0.00	0.0000	0.0000	0.0000	0.00
29	STINGER	-16.30	-4.77	18.77	113.64	4.384	0.000	313.23	0.00	0.0144	0.0000	0.0146	0.00
32	STINGER	-25.62	-8.00	20.03	123.51	37.848	0.000	309.64	-126.03	0.0142	-0.0943	0.1086	0.00
34	STINGER	-35.80	-11.98	22.46	134.44	25.956	0.000	305.85	-88.43	0.0139	-0.0661	0.0804	0.00
36	STINGER	-38.57	-13.14	22.95	137.45	0.000	0.377	304.82	-42.36	0.0138	-0.0317	0.0458	0.00
38	SAGBEND	-44.39	-15.62	23.11	143.77	0.000	0.000	302.38	15.45	0.0136	0.0116	0.0256	0.00
39	SAGBEND	-49.96	-17.98	22.64	149.82	0.000	0.000	299.99	42.73	0.0135	0.0320	0.0459	0.00
40	SAGBEND	-55.56	-20.27	21.85	155.87	0.000	0.000	297.67	56.71	0.0133	0.0424	0.0562	0.00
41	SAGBEND	-61.19	-22.47	20.91	161.92	0.000	0.000	295.45	64.14	0.0131	0.0480	0.0617	0.00
42	SAGBEND	-66.86	-24.58	19.88	167.97	0.000	0.000	293.33	68.32	0.0130	0.0511	0.0647	0.00
43	SAGBEND	-72.57	-26.59	18.80	174.02	0.000	0.000	291.32	70.88	0.0128	0.0530	0.0665	0.00
44	SAGBEND	-78.32	-28.48	17.69	180.07	0.000	0.000	289.42	72.61	0.0127	0.0543	0.0677	0.00
45	SAGBEND	-84.10	-30.26	16.55	186.12	0.000	0.000	287.64	73.90	0.0126	0.0553	0.0686	0.00
46	SAGBEND	-89.92	-31.93	15.39	192.17	0.000	0.000	285.97	74.96	0.0124	0.0561	0.0693	0.00
47	SAGBEND	-95.76	-33.47	14.23	198.22	0.000	0.000	284.42	75.86	0.0123	0.0567	0.0699	0.00
48	SAGBEND	-101.64	-34.90	13.04	204.27	0.000	0.000	283.00	76.66	0.0122	0.0573	0.0705	0.00
49	SAGBEND	-107.55	-36.20	11.85	210.32	0.000	0.000	281.69	77.36	0.0121	0.0579	0.0709	0.00
50	SAGBEND	-113.48	-37.38	10.64	216.37	0.000	0.000	280.51	77.97	0.0120	0.0583	0.0713	0.00
51	SAGBEND	-119.44	-38.44	9.43	222.42	0.000	0.000	279.46	78.46	0.0119	0.0587	0.0717	0.00
52	SAGBEND	-125.42	-39.37	8.21	228.47	0.000	0.000	278.53	78.79	0.0119	0.0589	0.0719	0.00
53	SAGBEND	-131.42	-40.17	6.99	234.52	0.000	0.000	277.73	78.87	0.0118	0.0590	0.0719	0.00
54	SAGBEND	-137.43	-40.84	5.77	240.57	0.000	0.000	277.06	78.52	0.0118	0.0587	0.0716	0.00
55	SAGBEND	-143.45	-41.38	4.56	246.62	0.000	0.000	276.52	77.39	0.0117	0.0579	0.0707	0.00
56	SAGBEND	-149.49	-41.80	3.37	252.67	0.000	0.000	276.11	74.82	0.0117	0.0560	0.0688	0.00
57	SAGBEND	-155.53	-42.10	2.25	258.72	0.000	0.000	275.83	69.48	0.0117	0.0520	0.0648	0.00
58	SAGBEND	-161.58	-42.28	1.24	264.77	0.014	0.000	275.68	58.81	0.0117	0.0440	0.0568	0.00
59	SEABED	-167.63	-42.37	0.48	270.82	2.723	0.000	275.64	37.99	0.0117	0.0284	0.0412	0.00

S T A T I C P I P E C O O R D I N A T E S, F O R C E S A N D S T R A I N S

NODE NO.	PIPE SECTION	X COORD (M)	Y COORD (M)	VERT ANGLE (DEG)	PIPE LENGTH (M)	SUPPORT REACTION (KN)	SEPARA -TION (M)	AXIAL TENSION (KN)	BENDING MOMENT (KN-M)	TENSILE STRAIN (PCT)	BENDING STRAIN (PCT)	TOTAL STRAIN (PCT)	PERCNT ALLOW (PCT)
60	SEABED	-173.68	-42.39	0.08	276.87	6.869	0.000	275.66	14.39	0.0117	0.0108	0.0236	0.00
61	SEABED	-179.73	-42.39	-0.03	282.92	7.259	0.000	275.67	2.33	0.0117	0.0017	0.0146	0.00
62	SEABED	-185.78	-42.39	-0.03	288.97	6.659	0.000	275.67	-1.07	0.0117	-0.0008	0.0137	0.00
63	SEABED	-191.83	-42.39	-0.02	295.02	6.215	0.000	275.67	-1.08	0.0117	-0.0008	0.0137	0.00
64	SEABED	-197.88	-42.39	0.00	301.07	6.043	0.000	275.67	-0.49	0.0117	-0.0004	0.0133	0.00
65	SEABED	-203.93	-42.39	0.00	307.12	6.013	0.000	275.67	-0.12	0.0117	-0.0001	0.0130	0.00
66	SEABED	-209.98	-42.39	0.00	313.17	6.024	0.000	275.67	0.01	0.0117	0.0000	0.0129	0.00
67	SEABED	-216.03	-42.39	0.00	319.22	6.037	0.000	275.67	0.03	0.0117	0.0000	0.0129	0.00
68	SEABED	-222.08	-42.39	0.00	325.27	6.042	0.000	275.67	0.02	0.0117	0.0000	0.0129	0.00
69	SEABED	-228.13	-42.39	0.00	331.32	6.044	0.000	275.67	0.00	0.0117	0.0000	0.0129	0.00
70	SEABED	-234.18	-42.39	0.00	337.37	6.044	0.000	275.67	0.00	0.0117	0.0000	0.0129	0.00
71	SEABED	-240.23	-42.39	0.00	343.42	6.043	0.000	275.67	0.00	0.0117	0.0000	0.0129	0.00
72	SEABED	-246.28	-42.39	0.00	349.47	6.043	0.000	275.67	0.00	0.0117	0.0000	0.0129	0.00
73	SEABED	-252.33	-42.39	0.00	355.52	6.043	0.000	275.67	0.00	0.0117	0.0000	0.0129	0.00
74	SEABED	-258.38	-42.39	0.00	361.57	6.043	0.000	275.67	0.00	0.0117	0.0000	0.0129	0.00
75	SEABED	-264.43	-42.39	0.00	367.62	0.000	0.000	275.67	0.00	0.0117	0.0000	0.0129	0.00

S T A T I C P I P E C O O R D I N A T E S, F O R C E S A N D S T R A I N S

NODE NO.	PIPE SECTION	X COORD (M)	Y COORD (M)	VERT ANGLE (DEG)	PIPE LENGTH (M)	SUPPORT REACTION (KN)	SEPARA -TION (M)	AXIAL TENSION (KN)	BENDING MOMENT (KN-M)	TENSILE STRAIN (PCT)	BENDING STRAIN (PCT)	TOTAL STRAIN (PCT)	PERCNT ALLOW (PCT)
1	LAYBARGE	96.31	6.41	1.69	0.00	0.655	0.000	0.00	0.00	0.0000	0.0000	0.0000	0.00
3	LAYBARGE	84.28	6.05	1.70	12.04	1.244	0.000	-0.04	0.00	0.0000	0.0000	0.0000	0.00
5	LAYBARGE	73.45	5.73	1.89	22.87	1.315	0.000	-0.08	0.00	0.0000	0.0000	0.0000	0.00
7	TENSIONR	60.11	5.24	2.19	36.23	1.858	0.000	301.78	0.00	0.0000	0.0000	0.0000	0.00
9	LAYBARGE	51.10	4.88	2.24	45.24	0.000	0.000	301.74	0.00	0.0000	0.0000	0.0000	0.00
10	LAYBARGE	46.45	4.70	2.11	49.89	0.000	0.003	301.72	0.00	0.0000	0.0000	0.0000	0.00
12	LAYBARGE	38.36	4.42	1.99	57.99	0.000	0.000	301.69	0.00	0.0000	0.0000	0.0000	0.00
13	LAYBARGE	35.36	4.31	2.63	60.99	8.004	0.000	301.66	0.00	0.0000	0.0000	0.0000	0.00
15	LAYBARGE	26.35	3.79	3.26	70.02	0.000	0.000	301.63	0.00	0.0000	0.0000	0.0000	0.00
16	LAYBARGE	23.33	3.62	5.29	73.04	22.815	0.000	301.40	0.00	0.0000	0.0000	0.0000	0.00
18	LAYBARGE	11.93	2.14	7.31	84.54	0.000	0.000	301.47	0.00	0.0000	0.0000	0.0000	0.00
19	LAYBARGE	8.89	1.76	9.20	87.60	20.967	0.000	301.24	0.00	0.0000	0.0000	0.0000	0.00
21	LAYBARGE	6.13	1.21	11.14	90.42	0.000	0.000	301.37	0.00	0.0000	0.0000	0.0000	0.00
22	LAYBARGE	3.11	0.62	12.77	93.49	18.126	0.000	301.17	0.00	0.0000	0.0000	0.0000	0.00
24	LAYBARGE	-6.69	-1.90	14.38	103.61	0.000	0.000	301.06	0.00	0.0000	0.0000	0.0000	0.00
27	STINGER	-7.54	-2.12	15.70	104.49	14.805	0.000	300.96	0.00	0.0000	0.0000	0.0000	0.00
29	STINGER	-16.28	-4.80	18.98	113.64	3.953	0.000	300.62	0.00	0.0139	0.0000	0.0140	0.00
32	STINGER	-25.60	-8.08	20.30	123.51	38.411	0.000	296.97	-130.07	0.0136	-0.0973	0.1111	0.00
34	STINGER	-35.76	-12.11	22.80	134.44	25.732	0.000	293.14	-89.88	0.0133	-0.0672	0.0808	0.00
36	STINGER	-38.53	-13.29	23.31	137.45	0.000	0.375	292.10	-43.37	0.0132	-0.0324	0.0460	0.00
38	SAGBEND	-44.32	-15.80	23.48	143.77	0.000	0.000	289.62	15.57	0.0130	0.0116	0.0251	0.00
39	SAGBEND	-49.88	-18.19	22.99	149.82	0.000	0.000	287.20	43.87	0.0129	0.0328	0.0462	0.00
40	SAGBEND	-55.46	-20.52	22.18	155.87	0.000	0.000	284.84	58.61	0.0127	0.0438	0.0571	0.00
41	SAGBEND	-61.08	-22.76	21.21	161.92	0.000	0.000	282.58	66.56	0.0125	0.0498	0.0629	0.00
42	SAGBEND	-66.74	-24.89	20.14	167.97	0.000	0.000	280.44	71.11	0.0124	0.0532	0.0662	0.00
43	SAGBEND	-72.44	-26.92	19.01	174.02	0.000	0.000	278.40	73.92	0.0122	0.0553	0.0682	0.00
44	SAGBEND	-78.18	-28.83	17.85	180.07	0.000	0.000	276.48	75.84	0.0121	0.0567	0.0696	0.00
45	SAGBEND	-83.96	-30.63	16.66	186.12	0.000	0.000	274.69	77.28	0.0119	0.0578	0.0705	0.00
46	SAGBEND	-89.77	-32.30	15.45	192.17	0.000	0.000	273.01	78.44	0.0118	0.0587	0.0713	0.00
47	SAGBEND	-95.62	-33.85	14.23	198.22	0.000	0.000	271.46	79.44	0.0117	0.0594	0.0720	0.00
48	SAGBEND	-101.50	-35.28	12.99	204.27	0.000	0.000	270.03	80.31	0.0116	0.0601	0.0726	0.00
49	SAGBEND	-107.41	-36.57	11.74	210.32	0.000	0.000	268.74	81.06	0.0115	0.0606	0.0731	0.00
50	SAGBEND	-113.35	-37.74	10.48	216.37	0.000	0.000	267.57	81.70	0.0114	0.0611	0.0735	0.00
51	SAGBEND	-119.31	-38.77	9.20	222.42	0.000	0.000	266.54	82.17	0.0113	0.0615	0.0738	0.00
52	SAGBEND	-125.29	-39.67	7.93	228.47	0.000	0.000	265.64	82.43	0.0113	0.0616	0.0740	0.00
53	SAGBEND	-131.29	-40.44	6.65	234.52	0.000	0.000	264.87	82.31	0.0112	0.0616	0.0739	0.00
54	SAGBEND	-137.31	-41.07	5.38	240.57	0.000	0.000	264.24	81.57	0.0112	0.0610	0.0733	0.00
55	SAGBEND	-143.34	-41.57	4.13	246.62	0.000	0.000	263.75	79.69	0.0111	0.0596	0.0718	0.00
56	SAGBEND	-149.38	-41.95	2.92	252.67	0.000	0.000	263.39	75.70	0.0111	0.0566	0.0688	0.00
57	SAGBEND	-155.42	-42.19	1.80	258.72	0.000	0.000	263.17	67.71	0.0111	0.0506	0.0629	0.00
58	SAGBEND	-161.47	-42.33	0.86	264.77	0.575	0.000	263.07	52.10	0.0111	0.0390	0.0512	0.00
59	SEABED	-167.52	-42.39	0.24	270.82	5.375	0.000	263.08	26.19	0.0111	0.0196	0.0318	0.00

S T A T I C P I P E C O O R D I N A T E S, F O R C E S A N D S T R A I N S

NODE NO.	PIPE SECTION	X COORD (M)	Y COORD (M)	VERT ANGLE (DEG)	PIPE LENGTH (M)	SUPPORT REACTION (KN)	SEPARA -TION (M)	AXIAL TENSION (KN)	BENDING MOMENT (KN-M)	TENSILE STRAIN (PCT)	BENDING STRAIN (PCT)	TOTAL STRAIN (PCT)	PERCNT ALLOW (PCT)
1	LAYBARGE	96.31	6.41	1.69	0.00	0.655	0.000	0.00	0.00	0.0000	0.0000	0.0000	0.00
3	LAYBARGE	84.28	6.05	1.70	12.04	1.244	0.000	-0.04	0.00	0.0000	0.0000	0.0000	0.00
5	LAYBARGE	73.45	5.73	1.89	22.87	1.315	0.000	-0.08	0.00	0.0000	0.0000	0.0000	0.00
7	TENSIONR	60.11	5.24	2.19	36.23	1.858	0.000	301.76	0.00	0.0000	0.0000	0.0000	0.00
9	LAYBARGE	51.10	4.88	2.24	45.24	0.000	0.000	301.72	0.00	0.0000	0.0000	0.0000	0.00
10	LAYBARGE	46.45	4.70	2.11	49.89	0.000	0.003	301.70	0.00	0.0000	0.0000	0.0000	0.00
12	LAYBARGE	38.36	4.42	1.99	57.99	0.000	0.000	301.67	0.00	0.0000	0.0000	0.0000	0.00
13	LAYBARGE	35.36	4.31	2.63	60.99	8.004	0.000	301.64	0.00	0.0000	0.0000	0.0000	0.00
15	LAYBARGE	26.35	3.79	3.26	70.02	0.000	0.000	301.61	0.00	0.0000	0.0000	0.0000	0.00
16	LAYBARGE	23.33	3.62	5.29	73.04	22.815	0.000	301.38	0.00	0.0000	0.0000	0.0000	0.00
18	LAYBARGE	11.93	2.14	7.31	84.54	0.000	0.000	301.45	0.00	0.0000	0.0000	0.0000	0.00
19	LAYBARGE	8.89	1.76	9.20	87.60	20.966	0.000	301.22	0.00	0.0000	0.0000	0.0000	0.00
21	LAYBARGE	6.13	1.21	11.14	90.42	0.000	0.000	301.35	0.00	0.0000	0.0000	0.0000	0.00
22	LAYBARGE	3.11	0.62	11.98	93.49	9.877	0.000	301.24	0.00	0.0000	0.0000	0.0000	0.00
24	LAYBARGE	-6.76	-1.63	12.81	103.61	0.000	0.000	301.07	0.00	0.0000	0.0000	0.0000	0.00
27	STINGER	-7.57	-1.82	13.38	104.45	6.967	0.000	301.03	0.00	0.0000	0.0000	0.0000	0.00
29	STINGER	-16.44	-4.03	16.26	113.59	24.554	0.000	300.59	0.00	0.0000	0.0000	0.0000	0.00
32	STINGER	-25.86	-7.18	22.69	123.53	21.520	0.000	299.72	0.00	0.0137	0.0000	0.0139	0.00
34	STINGER	-35.93	-11.43	23.37	134.46	30.911	0.000	295.36	-73.36	0.0134	-0.0549	0.0686	0.00
36	STINGER	-38.68	-12.63	23.77	137.46	0.000	0.412	294.25	-31.84	0.0133	-0.0238	0.0375	0.00
38	SAGBEND	-44.45	-15.18	23.81	143.77	0.000	0.000	291.72	20.95	0.0132	0.0157	0.0292	0.00
39	SAGBEND	-50.00	-17.60	23.26	149.82	0.000	0.000	289.26	46.31	0.0130	0.0346	0.0481	0.00
40	SAGBEND	-55.57	-19.95	22.43	155.87	0.000	0.000	286.88	59.55	0.0128	0.0445	0.0579	0.00
41	SAGBEND	-61.18	-22.21	21.45	161.92	0.000	0.000	284.60	66.74	0.0126	0.0499	0.0631	0.00
42	SAGBEND	-66.83	-24.37	20.38	167.97	0.000	0.000	282.43	70.89	0.0125	0.0530	0.0661	0.00
43	SAGBEND	-72.53	-26.43	19.26	174.02	0.000	0.000	280.38	73.50	0.0123	0.0550	0.0680	0.00
44	SAGBEND	-78.26	-28.36	18.10	180.07	0.000	0.000	278.43	75.31	0.0122	0.0563	0.0693	0.00
45	SAGBEND	-84.03	-30.18	16.92	186.12	0.000	0.000	276.61	76.69	0.0120	0.0574	0.0702	0.00
46	SAGBEND	-89.83	-31.88	15.72	192.17	0.000	0.000	274.91	77.83	0.0119	0.0582	0.0710	0.00
47	SAGBEND	-95.67	-33.46	14.51	198.22	0.000	0.000	273.33	78.82	0.0118	0.0589	0.0716	0.00
48	SAGBEND	-101.55	-34.92	13.28	204.27	0.000	0.000	271.87	79.69	0.0117	0.0596	0.0722	0.00
49	SAGBEND	-107.45	-36.24	12.04	210.32	0.000	0.000	270.55	80.46	0.0116	0.0602	0.0727	0.00
50	SAGBEND	-113.38	-37.44	10.79	216.37	0.000	0.000	269.35	81.11	0.0115	0.0607	0.0732	0.00
51	SAGBEND	-119.33	-38.51	9.52	222.42	0.000	0.000	268.28	81.63	0.0114	0.0611	0.0735	0.00
52	SAGBEND	-125.31	-39.44	8.25	228.47	0.000	0.000	267.35	81.95	0.0114	0.0613	0.0737	0.00
53	SAGBEND	-131.31	-40.24	6.98	234.52	0.000	0.000	266.55	81.96	0.0113	0.0613	0.0737	0.00
54	SAGBEND	-137.32	-40.91	5.71	240.57	0.000	0.000	265.88	81.45	0.0112	0.0609	0.0733	0.00
55	SAGBEND	-143.35	-41.45	4.46	246.62	0.000	0.000	265.35	79.98	0.0112	0.0598	0.0721	0.00
56	SAGBEND	-149.38	-41.85	3.24	252.67	0.000	0.000	264.95	76.77	0.0112	0.0574	0.0697	0.00
57	SAGBEND	-155.43	-42.13	2.10	258.72	0.000	0.000	264.70	70.25	0.0112	0.0525	0.0648	0.00
58	SAGBEND	-161.47	-42.30	1.10	264.77	0.108	0.000	264.57	57.43	0.0111	0.0430	0.0552	0.00
59	SEABED	-167.52	-42.38	0.37	270.82	3.879	0.000	264.55	33.64	0.0111	0.0252	0.0375	0.00

S T A T I C P I P E C O O R D I N A T E S, F O R C E S A N D S T R A I N S

NODE NO.	PIPE SECTION	X COORD (M)	Y COORD (M)	VERT ANGLE (DEG)	PIPE LENGTH (M)	SUPPORT REACTION (KN)	SEPARA -TION (M)	AXIAL TENSION (KN)	BENDING MOMENT (KN-M)	TENSILE STRAIN (PCT)	BENDING STRAIN (PCT)	TOTAL STRAIN (PCT)	PERCNT ALLOW (PCT)
60	SEABED	-173.57	-42.40	0.00	276.87	7.420	0.000	263.09	7.21	0.0111	0.0054	0.0177	0.00
61	SEABED	-179.62	-42.39	-0.04	282.92	7.025	0.000	263.09	-0.11	0.0111	-0.0001	0.0124	0.00
62	SEABED	-185.67	-42.39	-0.03	288.97	6.414	0.000	263.09	-1.35	0.0111	-0.0010	0.0133	0.00
63	SEABED	-191.72	-42.39	-0.01	295.02	6.102	0.000	263.09	-0.82	0.0111	-0.0006	0.0129	0.00
64	SEABED	-197.77	-42.39	0.00	301.07	6.014	0.000	263.09	-0.28	0.0111	-0.0002	0.0125	0.00
65	SEABED	-203.82	-42.39	0.00	307.12	6.015	0.000	263.09	-0.03	0.0111	0.0000	0.0124	0.00
66	SEABED	-209.87	-42.39	0.00	313.17	6.030	0.000	263.09	0.03	0.0111	0.0000	0.0124	0.00
67	SEABED	-215.92	-42.39	0.00	319.22	6.040	0.000	263.09	0.02	0.0111	0.0000	0.0124	0.00
68	SEABED	-221.97	-42.39	0.00	325.27	6.044	0.000	263.09	0.01	0.0111	0.0000	0.0123	0.00
69	SEABED	-228.02	-42.39	0.00	331.32	6.044	0.000	263.09	0.00	0.0111	0.0000	0.0123	0.00
70	SEABED	-234.07	-42.39	0.00	337.37	6.044	0.000	263.09	0.00	0.0111	0.0000	0.0123	0.00
71	SEABED	-240.12	-42.39	0.00	343.42	6.043	0.000	263.09	0.00	0.0111	0.0000	0.0123	0.00
72	SEABED	-246.17	-42.39	0.00	349.47	6.043	0.000	263.09	0.00	0.0111	0.0000	0.0123	0.00
73	SEABED	-252.22	-42.39	0.00	355.52	6.043	0.000	263.09	0.00	0.0111	0.0000	0.0123	0.00
74	SEABED	-258.27	-42.39	0.00	361.57	0.000	0.000	263.09	0.00	0.0111	0.0000	0.0123	0.00

S T A T I C P I P E C O O R D I N A T E S, F O R C E S A N D S T R A I N S

NODE NO.	PIPE SECTION	X COORD (M)	Y COORD (M)	VERT ANGLE (DEG)	PIPE LENGTH (M)	SUPPORT REACTION (KN)	SEPARA -TION (M)	AXIAL TENSION (KN)	BENDING MOMENT (KN-M)	TENSILE STRAIN (PCT)	BENDING STRAIN (PCT)	TOTAL STRAIN (PCT)	PERCNT ALLOW (PCT)
60	SEABED	-173.57	-42.39	0.04	276.87	7.235	0.000	264.57	11.26	0.0111	0.0084	0.0208	0.00
61	SEABED	-179.62	-42.39	-0.04	282.92	7.207	0.000	264.57	1.11	0.0111	0.0008	0.0132	0.00
62	SEABED	-185.67	-42.39	-0.03	288.97	6.561	0.000	264.57	-1.30	0.0111	-0.0010	0.0134	0.00
63	SEABED	-191.72	-42.39	-0.01	295.02	6.162	0.000	264.57	-1.01	0.0111	-0.0008	0.0131	0.00
64	SEABED	-197.77	-42.39	0.00	301.07	6.026	0.000	264.57	-0.40	0.0111	-0.0003	0.0127	0.00
65	SEABED	-203.82	-42.39	0.00	307.12	6.011	0.000	264.57	-0.07	0.0111	-0.0001	0.0125	0.00
66	SEABED	-209.87	-42.39	0.00	313.17	6.026	0.000	264.57	0.02	0.0111	0.0000	0.0124	0.00
67	SEABED	-215.92	-42.39	0.00	319.22	6.038	0.000	264.57	0.03	0.0111	0.0000	0.0124	0.00
68	SEABED	-221.97	-42.39	0.00	325.27	6.043	0.000	264.57	0.01	0.0111	0.0000	0.0124	0.00
69	SEABED	-228.02	-42.39	0.00	331.32	6.044	0.000	264.57	0.00	0.0111	0.0000	0.0124	0.00
70	SEABED	-234.07	-42.39	0.00	337.37	6.044	0.000	264.57	0.00	0.0111	0.0000	0.0124	0.00
71	SEABED	-240.12	-42.39	0.00	343.42	6.043	0.000	264.57	0.00	0.0111	0.0000	0.0124	0.00
72	SEABED	-246.17	-42.39	0.00	349.47	6.043	0.000	264.57	0.00	0.0111	0.0000	0.0124	0.00
73	SEABED	-252.22	-42.39	0.00	355.52	6.043	0.000	264.57	0.00	0.0111	0.0000	0.0124	0.00
74	SEABED	-258.27	-42.39	0.00	361.57	0.000	0.000	264.57	0.00	0.0111	0.0000	0.0124	0.00

S T A T I C P I P E C O O R D I N A T E S, F O R C E S A N D S T R A I N S

NODE NO.	PIPE SECTION	X COORD (M)	Y COORD (M)	VERT ANGLE (DEG)	PIPE LENGTH (M)	SUPPORT REACTION (KN)	SEPARA -TION (M)	AXIAL TENSION (KN)	BENDING MOMENT (KN-M)	TENSILE STRAIN (PCT)	BENDING STRAIN (PCT)	TOTAL STRAIN (PCT)	PERCNT ALLOW (PCT)
1	LAYBARGE	96.31	6.41	1.69	0.00	0.655	0.000	0.00	0.00	0.0000	0.0000	0.0000	0.00
3	LAYBARGE	84.28	6.05	1.70	12.04	1.244	0.000	-0.04	0.00	0.0000	0.0000	0.0000	0.00
5	LAYBARGE	73.45	5.73	1.89	22.87	1.315	0.000	-0.08	0.00	0.0000	0.0000	0.0000	0.00
7	TENSIONR	60.11	5.24	2.20	36.23	1.849	0.000	289.16	0.00	0.0000	0.0000	0.0000	0.00
9	LAYBARGE	51.10	4.88	2.25	45.24	0.000	0.000	289.12	0.00	0.0000	0.0000	0.0000	0.00
10	LAYBARGE	46.45	4.70	2.11	49.89	0.000	0.001	289.10	0.00	0.0000	0.0000	0.0000	0.00
12	LAYBARGE	38.36	4.42	1.98	57.99	0.000	0.000	289.07	0.00	0.0000	0.0000	0.0000	0.00
13	LAYBARGE	35.36	4.31	2.62	60.99	7.753	0.000	289.03	0.00	0.0000	0.0000	0.0000	0.00
15	LAYBARGE	26.35	3.79	3.26	70.02	0.000	0.000	289.01	0.00	0.0000	0.0000	0.0000	0.00
16	LAYBARGE	23.33	3.62	5.29	73.04	21.921	0.000	288.79	0.00	0.0000	0.0000	0.0000	0.00
18	LAYBARGE	11.93	2.14	7.31	84.54	0.000	0.000	288.84	0.00	0.0000	0.0000	0.0000	0.00
19	LAYBARGE	8.89	1.76	9.20	87.60	20.134	0.000	288.63	0.00	0.0000	0.0000	0.0000	0.00
21	LAYBARGE	6.13	1.21	11.13	90.42	0.000	0.000	288.74	0.00	0.0000	0.0000	0.0000	0.00
22	LAYBARGE	3.11	0.62	11.97	93.49	9.391	0.000	288.64	0.00	0.0000	0.0000	0.0000	0.00
24	LAYBARGE	-6.76	-1.63	12.79	103.61	0.000	0.000	288.46	0.00	0.0000	0.0000	0.0000	0.00
27	STINGER	-7.57	-1.81	13.35	104.45	6.611	0.000	288.43	0.00	0.0000	0.0000	0.0000	0.00
29	STINGER	-16.44	-4.02	16.33	113.59	24.762	0.000	287.98	0.00	0.0000	0.0000	0.0000	0.00
32	STINGER	-25.86	-7.20	23.11	123.53	21.666	0.000	287.06	0.00	0.0132	0.0000	0.0133	0.00
34	STINGER	-35.89	-11.53	23.80	134.46	30.797	0.000	282.62	-73.49	0.0128	-0.0550	0.0681	0.00
36	STINGER	-38.64	-12.75	24.20	137.47	0.000	0.412	281.50	-31.84	0.0127	-0.0238	0.0369	0.00
38	SAGBEND	-44.38	-15.34	24.23	143.77	0.000	0.000	278.92	21.68	0.0126	0.0162	0.0292	0.00
39	SAGBEND	-49.91	-17.80	23.67	149.82	0.000	0.000	276.43	47.86	0.0124	0.0358	0.0486	0.00
40	SAGBEND	-55.47	-20.19	22.81	155.87	0.000	0.000	274.01	61.76	0.0122	0.0462	0.0589	0.00
41	SAGBEND	-61.07	-22.48	21.78	161.92	0.000	0.000	271.69	69.44	0.0120	0.0519	0.0645	0.00
42	SAGBEND	-66.71	-24.68	20.67	167.97	0.000	0.000	269.49	73.94	0.0119	0.0553	0.0678	0.00
43	SAGBEND	-72.39	-26.75	19.50	174.02	0.000	0.000	267.40	76.81	0.0117	0.0574	0.0699	0.00
44	SAGBEND	-78.11	-28.71	18.29	180.07	0.000	0.000	265.44	78.81	0.0116	0.0589	0.0713	0.00
45	SAGBEND	-83.88	-30.55	17.06	186.12	0.000	0.000	263.60	80.35	0.0114	0.0601	0.0723	0.00
46	SAGBEND	-89.68	-32.26	15.80	192.17	0.000	0.000	261.88	81.62	0.0113	0.0610	0.0732	0.00
47	SAGBEND	-95.52	-33.84	14.53	198.22	0.000	0.000	260.30	82.71	0.0112	0.0619	0.0739	0.00
48	SAGBEND	-101.39	-35.30	13.23	204.27	0.000	0.000	258.85	83.66	0.0111	0.0626	0.0746	0.00
49	SAGBEND	-107.30	-36.61	11.93	210.32	0.000	0.000	257.53	84.48	0.0110	0.0632	0.0751	0.00
50	SAGBEND	-113.23	-37.80	10.62	216.37	0.000	0.000	256.34	85.16	0.0109	0.0637	0.0756	0.00
51	SAGBEND	-119.19	-38.84	9.29	222.42	0.000	0.000	255.30	85.65	0.0108	0.0641	0.0759	0.00
52	SAGBEND	-125.17	-39.75	7.96	228.47	0.000	0.000	254.39	85.87	0.0107	0.0642	0.0760	0.00
53	SAGBEND	-131.17	-40.52	6.63	234.52	0.000	0.000	253.62	85.63	0.0107	0.0640	0.0758	0.00
54	SAGBEND	-137.19	-41.15	5.31	240.57	0.000	0.000	253.00	84.63	0.0106	0.0633	0.0750	0.00
55	SAGBEND	-143.22	-41.64	4.01	246.62	0.000	0.000	252.52	82.24	0.0106	0.0615	0.0732	0.00
56	SAGBEND	-149.26	-41.99	2.77	252.67	0.000	0.000	252.18	77.31	0.0106	0.0578	0.0695	0.00
57	SAGBEND	-155.30	-42.23	1.64	258.72	0.000	0.000	251.98	67.63	0.0106	0.0506	0.0623	0.00
58	SAGBEND	-161.35	-42.35	0.72	264.77	1.248	0.000	251.90	49.01	0.0106	0.0367	0.0484	0.00
59	SEABED	-167.40	-42.39	0.17	270.82	6.268	0.000	251.93	21.92	0.0106	0.0164	0.0281	0.00

S T A T I C P I P E C O O R D I N A T E S, F O R C E S A N D S T R A I N S

NODE NO.	PIPE SECTION	X COORD (M)	Y COORD (M)	VERT ANGLE (DEG)	PIPE LENGTH (M)	SUPPORT REACTION (KN)	SEPARA -TION (M)	AXIAL TENSION (KN)	BENDING MOMENT (KN-M)	TENSILE STRAIN (PCT)	BENDING STRAIN (PCT)	TOTAL STRAIN (PCT)	PERCNT ALLOW (PCT)
60	SEABED	-173.45	-42.40	-0.02	276.87	7.505	0.000	251.94	5.01	0.0106	0.0037	0.0155	0.00
61	SEABED	-179.50	-42.39	-0.04	282.92	6.918	0.000	251.94	-0.76	0.0106	-0.0006	0.0124	0.00
62	SEABED	-185.55	-42.39	-0.02	288.97	6.331	0.000	251.94	-1.37	0.0106	-0.0010	0.0128	0.00
63	SEABED	-191.60	-42.39	-0.01	295.02	6.068	0.000	251.94	-0.72	0.0106	-0.0005	0.0124	0.00
64	SEABED	-197.65	-42.39	0.00	301.07	6.007	0.000	251.94	-0.21	0.0106	-0.0002	0.0120	0.00
65	SEABED	-203.70	-42.39	0.00	307.12	6.016	0.000	251.94	0.00	0.0106	0.0000	0.0118	0.00
66	SEABED	-209.75	-42.39	0.00	313.17	6.033	0.000	251.94	0.04	0.0106	0.0000	0.0118	0.00
67	SEABED	-215.80	-42.39	0.00	319.22	6.041	0.000	251.94	0.02	0.0106	0.0000	0.0118	0.00
68	SEABED	-221.85	-42.39	0.00	325.27	6.044	0.000	251.94	0.01	0.0106	0.0000	0.0118	0.00
69	SEABED	-227.90	-42.39	0.00	331.32	6.044	0.000	251.94	0.00	0.0106	0.0000	0.0118	0.00
70	SEABED	-233.95	-42.39	0.00	337.37	6.044	0.000	251.94	0.00	0.0106	0.0000	0.0118	0.00
71	SEABED	-240.00	-42.39	0.00	343.42	6.043	0.000	251.94	0.00	0.0106	0.0000	0.0118	0.00
72	SEABED	-246.05	-42.39	0.00	349.47	6.043	0.000	251.94	0.00	0.0106	0.0000	0.0118	0.00
73	SEABED	-252.10	-42.39	0.00	355.52	6.043	0.000	251.94	0.00	0.0106	0.0000	0.0118	0.00
74	SEABED	-258.15	-42.39	0.00	361.57	0.000	0.000	251.94	0.00	0.0106	0.0000	0.0118	0.00

S T A T I C P I P E C O O R D I N A T E S, F O R C E S A N D S T R A I N S

NODE NO.	PIPE SECTION	X COORD (M)	Y COORD (M)	VERT ANGLE (DEG)	PIPE LENGTH (M)	SUPPORT REACTION (KN)	SEPARA -TION (M)	AXIAL TENSION (KN)	BENDING MOMENT (KN-M)	TENSILE STRAIN (PCT)	BENDING STRAIN (PCT)	TOTAL STRAIN (PCT)	PERCNT ALLOW (PCT)
1	LAYBARGE	96.31	6.41	1.69	0.00	0.655	0.000	0.00	0.00	0.0000	0.0000	0.0000	0.00
3	LAYBARGE	84.28	6.05	1.70	12.04	1.244	0.000	-0.04	0.00	0.0000	0.0000	0.0000	0.00
5	LAYBARGE	73.45	5.73	1.89	22.87	1.315	0.000	-0.08	0.00	0.0000	0.0000	0.0000	0.00
7	TENSIONR	60.11	5.24	2.20	36.23	1.849	0.000	289.18	0.00	0.0000	0.0000	0.0000	0.00
9	LAYBARGE	51.10	4.88	2.25	45.24	0.000	0.000	289.14	0.00	0.0000	0.0000	0.0000	0.00
10	LAYBARGE	46.45	4.70	2.11	49.89	0.000	0.001	289.13	0.00	0.0000	0.0000	0.0000	0.00
12	LAYBARGE	38.36	4.42	1.98	57.99	0.000	0.000	289.09	0.00	0.0000	0.0000	0.0000	0.00
13	LAYBARGE	35.36	4.31	2.62	60.99	7.753	0.000	289.06	0.00	0.0000	0.0000	0.0000	0.00
15	LAYBARGE	26.35	3.79	3.26	70.02	0.000	0.000	289.03	0.00	0.0000	0.0000	0.0000	0.00
16	LAYBARGE	23.33	3.62	5.29	73.04	21.922	0.000	288.81	0.00	0.0000	0.0000	0.0000	0.00
18	LAYBARGE	11.93	2.14	7.31	84.54	0.000	0.000	288.87	0.00	0.0000	0.0000	0.0000	0.00
19	LAYBARGE	8.89	1.76	9.20	87.60	20.133	0.000	288.65	0.00	0.0000	0.0000	0.0000	0.00
21	LAYBARGE	6.13	1.21	11.13	90.42	0.000	0.000	288.77	0.00	0.0000	0.0000	0.0000	0.00
22	LAYBARGE	3.11	0.62	11.46	93.49	4.243	0.000	288.70	0.00	0.0000	0.0000	0.0000	0.00
24	LAYBARGE	-6.79	-1.45	11.76	103.61	0.000	0.000	288.50	0.00	0.0000	0.0000	0.0000	0.00
27	STINGER	-7.58	-1.61	11.84	104.41	1.715	0.000	288.49	0.00	0.0000	0.0000	0.0000	0.00
29	STINGER	-16.52	-3.51	14.36	113.56	24.982	0.000	288.04	0.00	0.0000	0.0000	0.0000	0.00
32	STINGER	-26.04	-6.37	19.06	123.50	24.150	0.000	287.79	0.00	0.0000	0.0000	0.0000	0.00
34	STINGER	-36.22	-10.36	25.74	134.43	30.474	0.000	286.79	0.00	0.0131	0.0000	0.0133	0.00
36	STINGER	-38.94	-11.67	25.66	137.45	0.000	0.223	285.47	20.73	0.0130	0.0155	0.0288	0.00
38	SAGBEND	-44.65	-14.38	25.09	143.77	0.000	0.000	282.72	47.15	0.0128	0.0353	0.0484	0.00
39	SAGBEND	-50.14	-16.91	24.24	149.82	0.000	0.000	280.17	60.30	0.0126	0.0451	0.0581	0.00
40	SAGBEND	-55.68	-19.34	23.25	155.87	0.000	0.000	277.71	67.56	0.0124	0.0505	0.0634	0.00
41	SAGBEND	-61.26	-21.68	22.16	161.92	0.000	0.000	275.37	71.83	0.0122	0.0537	0.0665	0.00
42	SAGBEND	-66.89	-23.90	21.02	167.97	0.000	0.000	273.13	74.59	0.0121	0.0558	0.0685	0.00
43	SAGBEND	-72.55	-26.02	19.85	174.02	0.000	0.000	271.02	76.55	0.0119	0.0573	0.0698	0.00
44	SAGBEND	-78.27	-28.01	18.65	180.07	0.000	0.000	269.02	78.09	0.0117	0.0584	0.0709	0.00
45	SAGBEND	-84.02	-29.89	17.43	186.12	0.000	0.000	267.14	79.39	0.0116	0.0594	0.0718	0.00
46	SAGBEND	-89.81	-31.64	16.19	192.17	0.000	0.000	265.39	80.53	0.0115	0.0602	0.0725	0.00
47	SAGBEND	-95.64	-33.26	14.93	198.22	0.000	0.000	263.77	81.55	0.0114	0.0610	0.0732	0.00
48	SAGBEND	-101.50	-34.75	13.66	204.27	0.000	0.000	262.27	82.48	0.0112	0.0617	0.0739	0.00
49	SAGBEND	-107.39	-36.12	12.38	210.32	0.000	0.000	260.91	83.31	0.0111	0.0623	0.0744	0.00
50	SAGBEND	-113.32	-37.35	11.08	216.37	0.000	0.000	259.68	84.02	0.0111	0.0628	0.0749	0.00
51	SAGBEND	-119.27	-38.44	9.77	222.42	0.000	0.000	258.58	84.57	0.0110	0.0633	0.0753	0.00
52	SAGBEND	-125.24	-39.40	8.46	228.47	0.000	0.000	257.62	84.91	0.0109	0.0635	0.0755	0.00
53	SAGBEND	-131.24	-40.22	7.14	234.52	0.000	0.000	256.80	84.90	0.0108	0.0635	0.0754	0.00
54	SAGBEND	-137.25	-40.90	5.82	240.57	0.000	0.000	256.12	84.30	0.0108	0.0630	0.0749	0.00
55	SAGBEND	-143.27	-41.45	4.53	246.62	0.000	0.000	255.58	82.65	0.0108	0.0618	0.0737	0.00
56	SAGBEND	-149.31	-41.86	3.27	252.67	0.000	0.000	255.19	79.08	0.0107	0.0591	0.0710	0.00
57	SAGBEND	-155.35	-42.14	2.09	258.72	0.000	0.000	254.93	71.95	0.0107	0.0538	0.0656	0.00
58	SAGBEND	-161.40	-42.31	1.07	264.77	0.160	0.000	254.80	58.09	0.0107	0.0434	0.0553	0.00
59	SEABED	-167.45	-42.38	0.35	270.82	4.229	0.000	254.79	33.02	0.0107	0.0247	0.0365	0.00

S T A T I C P I P E C O O R D I N A T E S, F O R C E S A N D S T R A I N S

NODE NO.	PIPE SECTION	X COORD (M)	Y COORD (M)	VERT ANGLE (DEG)	PIPE LENGTH (M)	SUPPORT REACTION (KN)	SEPARA -TION (M)	AXIAL TENSION (KN)	BENDING MOMENT (KN-M)	TENSILE STRAIN (PCT)	BENDING STRAIN (PCT)	TOTAL STRAIN (PCT)	PERCNT ALLOW (PCT)
60	SEABED	-173.50	-42.40	0.03	276.87	7.365	0.000	254.82	10.62	0.0107	0.0079	0.0198	0.00
61	SEABED	-179.55	-42.39	-0.04	282.92	7.217	0.000	254.82	0.79	0.0107	0.0006	0.0125	0.00
62	SEABED	-185.60	-42.39	-0.03	288.97	6.543	0.000	254.82	-1.39	0.0107	-0.0010	0.0130	0.00
63	SEABED	-191.65	-42.39	-0.01	295.02	6.148	0.000	254.82	-1.01	0.0107	-0.0008	0.0127	0.00
64	SEABED	-197.70	-42.39	0.00	301.07	6.020	0.000	254.82	-0.39	0.0107	-0.0003	0.0122	0.00
65	SEABED	-203.75	-42.39	0.00	307.12	6.010	0.000	254.82	-0.06	0.0107	0.0000	0.0120	0.00
66	SEABED	-209.80	-42.39	0.00	313.17	6.027	0.000	254.82	0.03	0.0107	0.0000	0.0120	0.00
67	SEABED	-215.85	-42.39	0.00	319.22	6.039	0.000	254.82	0.03	0.0107	0.0000	0.0120	0.00
68	SEABED	-221.90	-42.39	0.00	325.27	6.043	0.000	254.82	0.01	0.0107	0.0000	0.0120	0.00
69	SEABED	-227.95	-42.39	0.00	331.32	6.044	0.000	254.82	0.00	0.0107	0.0000	0.0120	0.00
70	SEABED	-234.00	-42.39	0.00	337.37	6.044	0.000	254.82	0.00	0.0107	0.0000	0.0120	0.00
71	SEABED	-240.05	-42.39	0.00	343.42	6.043	0.000	254.82	0.00	0.0107	0.0000	0.0120	0.00

72	SEABED	-246.10	-42.39	0.00	349.47	6.043	0.000	254.82	0.00	0.0107	0.0000	0.0120	0.00
73	SEABED	-252.15	-42.39	0.00	355.52	6.043	0.000	254.82	0.00	0.0107	0.0000	0.0120	0.00
74	SEABED	-258.20	-42.39	0.00	361.57	0.000	0.000	254.82	0.00	0.0107	0.0000	0.0120	0.00

S T A T I C P I P E C O O R D I N A T E S, F O R C E S A N D S T R A I N S

NODE NO.	PIPE SECTION	X COORD (M)	Y COORD (M)	VERT ANGLE (DEG)	PIPE LENGTH (M)	SUPPORT REACTION (KN)	SEPARA -TION (M)	AXIAL TENSION (KN)	BENDING MOMENT (KN-M)	TENSILE STRAIN (PCT)	BENDING STRAIN (PCT)	TOTAL STRAIN (PCT)	PERCNT ALLOW (PCT)
1	LAYBARGE	96.31	6.41	1.69	0.00	0.655	0.000	0.00	0.00	0.0000	0.0000	0.0000	0.00
3	LAYBARGE	84.28	6.05	1.70	12.04	1.244	0.000	-0.04	0.00	0.0000	0.0000	0.0000	0.00
5	LAYBARGE	73.45	5.73	1.89	22.87	1.315	0.000	-0.08	0.00	0.0000	0.0000	0.0000	0.00
7	TENSIONR	60.11	5.24	2.20	36.23	1.840	0.000	276.58	0.00	0.0000	0.0000	0.0000	0.00
9	LAYBARGE	51.10	4.88	2.25	45.24	0.000	0.000	276.54	0.00	0.0000	0.0000	0.0000	0.00
10	LAYBARGE	46.45	4.70	2.10	49.89	0.000	0.000	276.52	0.00	0.0000	0.0000	0.0000	0.00
12	LAYBARGE	38.36	4.41	1.97	57.99	0.000	0.000	276.49	0.00	0.0000	0.0000	0.0000	0.00
13	LAYBARGE	35.36	4.31	2.62	60.99	7.503	0.000	276.46	0.00	0.0000	0.0000	0.0000	0.00
15	LAYBARGE	26.35	3.79	3.26	70.02	0.000	0.000	276.43	0.00	0.0000	0.0000	0.0000	0.00
16	LAYBARGE	23.33	3.62	5.29	73.04	21.030	0.000	276.22	0.00	0.0000	0.0000	0.0000	0.00
18	LAYBARGE	11.93	2.14	7.31	84.54	0.000	0.000	276.27	0.00	0.0000	0.0000	0.0000	0.00
19	LAYBARGE	8.89	1.76	9.20	87.60	19.304	0.000	276.06	0.00	0.0000	0.0000	0.0000	0.00
21	LAYBARGE	6.13	1.21	11.13	90.42	0.000	0.000	276.17	0.00	0.0000	0.0000	0.0000	0.00
22	LAYBARGE	3.11	0.62	11.42	93.49	3.730	0.000	276.10	0.00	0.0000	0.0000	0.0000	0.00
24	LAYBARGE	-6.80	-1.44	11.69	103.61	0.000	0.000	275.90	0.00	0.0000	0.0000	0.0000	0.00
27	STINGER	-7.56	-1.60	11.72	104.39	1.312	0.000	275.89	0.00	0.0000	0.0000	0.0000	0.00
29	STINGER	-16.51	-3.47	14.34	113.53	25.231	0.000	275.42	0.00	0.0000	0.0000	0.0000	0.00
32	STINGER	-26.00	-6.35	19.31	123.45	24.342	0.000	275.17	0.00	0.0000	0.0000	0.0000	0.00
34	STINGER	-36.15	-10.39	26.26	134.39	30.360	0.000	274.17	0.00	0.0125	0.0000	0.0127	0.00
36	STINGER	-38.87	-11.73	26.17	137.42	0.000	0.217	272.82	21.27	0.0124	0.0159	0.0286	0.00
38	SAGBEND	-44.58	-14.51	25.58	143.77	0.000	0.000	270.00	48.73	0.0122	0.0364	0.0490	0.00
39	SAGBEND	-50.06	-17.08	24.70	149.82	0.000	0.000	267.40	62.53	0.0120	0.0468	0.0592	0.00
40	SAGBEND	-55.58	-19.56	23.67	155.87	0.000	0.000	264.90	70.29	0.0118	0.0526	0.0649	0.00
41	SAGBEND	-61.14	-21.94	22.54	161.92	0.000	0.000	262.51	74.93	0.0116	0.0560	0.0682	0.00
42	SAGBEND	-66.75	-24.20	21.35	167.97	0.000	0.000	260.24	77.97	0.0114	0.0583	0.0704	0.00
43	SAGBEND	-72.41	-26.34	20.13	174.02	0.000	0.000	258.10	80.15	0.0113	0.0599	0.0719	0.00
44	SAGBEND	-78.11	-28.36	18.87	180.07	0.000	0.000	256.07	81.87	0.0111	0.0612	0.0731	0.00
45	SAGBEND	-83.86	-30.25	17.59	186.12	0.000	0.000	254.18	83.31	0.0110	0.0623	0.0741	0.00
46	SAGBEND	-89.65	-32.01	16.28	192.17	0.000	0.000	252.41	84.58	0.0109	0.0633	0.0750	0.00
47	SAGBEND	-95.47	-33.64	14.96	198.22	0.000	0.000	250.78	85.71	0.0107	0.0641	0.0757	0.00
48	SAGBEND	-101.34	-35.14	13.63	204.27	0.000	0.000	249.28	86.73	0.0106	0.0649	0.0764	0.00
49	SAGBEND	-107.23	-36.49	12.27	210.32	0.000	0.000	247.93	87.61	0.0105	0.0655	0.0770	0.00
50	SAGBEND	-113.16	-37.71	10.91	216.37	0.000	0.000	246.71	88.35	0.0104	0.0661	0.0775	0.00
51	SAGBEND	-119.11	-38.78	9.54	222.42	0.000	0.000	245.63	88.87	0.0104	0.0665	0.0779	0.00
52	SAGBEND	-125.09	-39.71	8.15	228.47	0.000	0.000	244.70	89.09	0.0103	0.0666	0.0780	0.00
53	SAGBEND	-131.09	-40.50	6.77	234.52	0.000	0.000	243.92	88.80	0.0102	0.0664	0.0777	0.00
54	SAGBEND	-137.10	-41.14	5.40	240.57	0.000	0.000	243.28	87.65	0.0102	0.0655	0.0768	0.00
55	SAGBEND	-143.13	-41.64	4.06	246.62	0.000	0.000	242.80	84.97	0.0102	0.0635	0.0748	0.00
56	SAGBEND	-149.17	-42.00	2.78	252.67	0.000	0.000	242.46	79.53	0.0101	0.0595	0.0707	0.00
57	SAGBEND	-155.22	-42.23	1.62	258.72	0.000	0.000	242.26	68.98	0.0101	0.0516	0.0628	0.00
58	SEABED	-161.27	-42.35	0.69	264.77	1.494	0.000	242.19	48.96	0.0101	0.0366	0.0479	0.00
59	SEABED	-167.32	-42.39	0.15	270.82	6.531	0.000	242.22	21.15	0.0101	0.0158	0.0271	0.00

S T A T I C P I P E C O O R D I N A T E S, F O R C E S A N D S T R A I N S

NODE NO.	PIPE SECTION	X COORD (M)	Y COORD (M)	VERT ANGLE (DEG)	PIPE LENGTH (M)	SUPPORT REACTION (KN)	SEPARA -TION (M)	AXIAL TENSION (KN)	BENDING MOMENT (KN-M)	TENSILE STRAIN (PCT)	BENDING STRAIN (PCT)	TOTAL STRAIN (PCT)	PERCNT ALLOW (PCT)
60	SEABED	-173.37	-42.40	-0.03	276.87	7.562	0.000	242.23	4.49	0.0101	0.0034	0.0147	0.00
61	SEABED	-179.42	-42.39	-0.04	282.92	6.906	0.000	242.23	-0.96	0.0101	-0.0007	0.0121	0.00
62	SEABED	-185.47	-42.39	-0.02	288.97	6.312	0.000	242.23	-1.40	0.0101	-0.0011	0.0124	0.00
63	SEABED	-191.52	-42.39	-0.01	295.02	6.057	0.000	242.23	-0.71	0.0101	-0.0005	0.0119	0.00
64	SEABED	-197.57	-42.39	0.00	301.07	6.004	0.000	242.23	-0.19	0.0101	-0.0001	0.0115	0.00
65	SEABED	-203.62	-42.39	0.00	307.12	6.016	0.000	242.23	0.01	0.0101	0.0000	0.0114	0.00
66	SEABED	-209.67	-42.39	0.00	313.17	6.033	0.000	242.23	0.04	0.0101	0.0000	0.0114	0.00
67	SEABED	-215.72	-42.39	0.00	319.22	6.042	0.000	242.23	0.02	0.0101	0.0000	0.0114	0.00
68	SEABED	-221.77	-42.39	0.00	325.27	6.044	0.000	242.23	0.01	0.0101	0.0000	0.0114	0.00
69	SEABED	-227.82	-42.39	0.00	331.32	6.044	0.000	242.23	0.00	0.0101	0.0000	0.0114	0.00
70	SEABED	-233.87	-42.39	0.00	337.37	6.044	0.000	242.23	0.00	0.0101	0.0000	0.0114	0.00
71	SEABED	-239.92	-42.39	0.00	343.42	6.043	0.000	242.23	0.00	0.0101	0.0000	0.0114	0.00
72	SEABED	-245.97	-42.39	0.00	349.47	6.043	0.000	242.23	0.00	0.0101	0.0000	0.0114	0.00
73	SEABED	-252.02	-42.39	0.00	355.52	0.000	0.000	242.23	0.00	0.0101	0.0000	0.0114	0.00

S T A T I C P I P E C O O R D I N A T E S, F O R C E S A N D S T R A I N S

NODE NO.	PIPE SECTION	X COORD (M)	Y COORD (M)	VERT ANGLE (DEG)	PIPE LENGTH (M)	SUPPORT REACTION (KN)	SEPARA -TION (M)	AXIAL TENSION (KN)	BENDING MOMENT (KN-M)	TENSILE STRAIN (PCT)	BENDING STRAIN (PCT)	TOTAL STRAIN (PCT)	PERCNT ALLOW (PCT)
1	LAYBARGE	96.31	6.41	1.69	0.00	0.655	0.000	0.00	0.00	0.0000	0.0000	0.0000	0.00
3	LAYBARGE	84.28	6.05	1.70	12.04	1.244	0.000	-0.04	0.00	0.0000	0.0000	0.0000	0.00
5	LAYBARGE	73.45	5.73	1.89	22.87	1.315	0.000	-0.08	0.00	0.0000	0.0000	0.0000	0.00
7	TENSIONR	60.11	5.24	2.20	36.23	1.840	0.000	276.60	0.00	0.0000	0.0000	0.0000	0.00
9	LAYBARGE	51.10	4.88	2.25	45.24	0.000	0.000	276.56	0.00	0.0000	0.0000	0.0000	0.00
10	LAYBARGE	46.45	4.70	2.10	49.89	0.000	0.000	276.54	0.00	0.0000	0.0000	0.0000	0.00
12	LAYBARGE	38.36	4.41	1.97	57.99	0.000	0.000	276.51	0.00	0.0000	0.0000	0.0000	0.00
13	LAYBARGE	35.36	4.31	2.62	60.99	7.503	0.000	276.48	0.00	0.0000	0.0000	0.0000	0.00
15	LAYBARGE	26.35	3.79	3.26	70.02	0.000	0.000	276.45	0.00	0.0000	0.0000	0.0000	0.00
16	LAYBARGE	23.33	3.62	5.29	73.04	21.031	0.000	276.24	0.00	0.0000	0.0000	0.0000	0.00
18	LAYBARGE	11.93	2.14	7.31	84.54	0.000	0.000	276.28	0.00	0.0000	0.0000	0.0000	0.00
19	LAYBARGE	8.89	1.76	9.20	87.60	19.305	0.000	276.07	0.00	0.0000	0.0000	0.0000	0.00
21	LAYBARGE	6.13	1.21	11.13	90.42	0.000	0.000	276.18	0.00	0.0000	0.0000	0.0000	0.00
22	LAYBARGE	3.11	0.62	11.09	93.49	0.565	0.000	276.12	0.00	0.0000	0.0000	0.0000	0.00
24	LAYBARGE	-6.82	-1.33	11.03	103.61	0.000	0.000	275.93	0.00	0.0000	0.0000	0.0000	0.00
27	STINGER	-7.58	-1.47	10.93	104.38	0.000	0.021	275.91	0.00	0.0000	0.0000	0.0000	0.00
29	STINGER	-16.56	-3.20	13.42	113.53	25.293	0.000	275.46	0.00	0.0000	0.0000	0.0000	0.00
32	STINGER	-26.12	-5.93	18.46	123.48	25.017	0.000	275.21	0.00	0.0000	0.0000	0.0000	0.00
34	STINGER	-36.33	-9.84	24.04	134.42	30.156	0.000	274.70	0.00	0.0000	0.0000	0.0000	0.00
36	STINGER	-39.02	-11.22	27.10	137.44	0.000	0.127	274.98	0.00	0.0000	0.0000	0.0000	0.00
38	SAGBEND	-41.31	-12.39	25.32	140.01	0.000	0.000	274.74	0.00	0.0124	0.0000	0.0128	0.00
39	SAGBEND	-44.71	-14.00	25.19	143.77	0.000	0.000	273.12	25.57	0.0123	0.0191	0.0318	0.00
40	SAGBEND	-50.19	-16.54	24.58	149.82	0.000	0.000	270.54	50.24	0.0121	0.0376	0.0501	0.00
41	SAGBEND	-55.71	-19.02	23.69	155.87	0.000	0.000	268.03	63.51	0.0119	0.0475	0.0599	0.00
42	SAGBEND	-61.28	-21.40	22.64	161.92	0.000	0.000	265.63	70.95	0.0118	0.0531	0.0654	0.00
43	SAGBEND	-66.88	-23.67	21.50	167.97	0.000	0.000	263.34	75.40	0.0116	0.0564	0.0686	0.00
44	SAGBEND	-72.53	-25.83	20.31	174.02	0.000	0.000	261.18	78.31	0.0114	0.0586	0.0707	0.00
45	SAGBEND	-78.23	-27.87	19.08	180.07	0.000	0.000	259.13	80.39	0.0113	0.0601	0.0721	0.00
46	SAGBEND	-83.97	-29.79	17.82	186.12	0.000	0.000	257.21	82.01	0.0111	0.0613	0.0733	0.00
47	SAGBEND	-89.75	-31.58	16.54	192.17	0.000	0.000	255.42	83.37	0.0110	0.0624	0.0742	0.00
48	SAGBEND	-95.57	-33.23	15.23	198.22	0.000	0.000	253.76	84.56	0.0109	0.0632	0.0750	0.00
49	SAGBEND	-101.42	-34.75	13.92	204.27	0.000	0.000	252.24	85.60	0.0108	0.0640	0.0757	0.00
50	SAGBEND	-107.31	-36.14	12.58	210.32	0.000	0.000	250.85	86.51	0.0107	0.0647	0.0763	0.00
51	SAGBEND	-113.23	-37.39	11.23	216.37	0.000	0.000	249.60	87.28	0.0106	0.0653	0.0769	0.00
52	SAGBEND	-119.18	-38.50	9.87	222.42	0.000	0.000	248.49	87.87	0.0105	0.0657	0.0772	0.00
53	SAGBEND	-125.15	-39.46	8.51	228.47	0.000	0.000	247.53	88.19	0.0104	0.0660	0.0774	0.00
54	SAGBEND	-131.14	-40.29	7.14	234.52	0.000	0.000	246.70	88.09	0.0104	0.0659	0.0773	0.00
55	SAGBEND	-137.16	-40.97	5.78	240.57	0.000	0.000	246.03	87.27	0.0103	0.0653	0.0767	0.00
56	SAGBEND	-143.18	-41.51	4.44	246.62	0.000	0.000	245.50	85.22	0.0103	0.0637	0.0751	0.00
57	SAGBEND	-149.22	-41.91	3.15	252.67	0.000	0.000	245.11	80.89	0.0103	0.0605	0.0719	0.00
58	SAGBEND	-155.26	-42.17	1.95	258.72	0.000	0.000	244.87	72.41	0.0102	0.0542	0.0655	0.00
59	SAGBEND	-161.31	-42.32	0.94	264.77	0.449	0.000	244.77	56.17	0.0102	0.0420	0.0534	0.00

S T A T I C P I P E C O O R D I N A T E S, F O R C E S A N D S T R A I N S

NODE NO.	PIPE SECTION	X COORD (M)	Y COORD (M)	VERT ANGLE (DEG)	PIPE LENGTH (M)	SUPPORT REACTION (KN)	SEPARA -TION (M)	AXIAL TENSION (KN)	BENDING MOMENT (KN-M)	TENSILE STRAIN (PCT)	BENDING STRAIN (PCT)	TOTAL STRAIN (PCT)	PERCNT ALLOW (PCT)
60	SEABED	-167.36	-42.38	0.27	270.82	5.239	0.000	244.78	28.96	0.0102	0.0217	0.0330	0.00
61	SEABED	-173.41	-42.40	0.00	276.87	7.549	0.000	244.80	8.17	0.0102	0.0061	0.0175	0.00
62	SEABED	-179.46	-42.39	-0.05	282.92	7.133	0.000	244.80	-0.05	0.0102	0.0000	0.0115	0.00
63	SEABED	-185.51	-42.39	-0.03	288.97	6.456	0.000	244.80	-1.49	0.0102	-0.0011	0.0126	0.00
64	SEABED	-191.56	-42.39	-0.01	295.02	6.107	0.000	244.80	-0.92	0.0102	-0.0007	0.0122	0.00
65	SEABED	-197.61	-42.39	0.00	301.07	6.010	0.000	244.80	-0.31	0.0102	-0.0002	0.0117	0.00
66	SEABED	-203.66	-42.39	0.00	307.12	6.011	0.000	244.80	-0.03	0.0102	0.0000	0.0115	0.00
67	SEABED	-209.71	-42.39	0.00	313.17	6.029	0.000	244.80	0.04	0.0102	0.0000	0.0115	0.00
68	SEABED	-215.76	-42.39	0.00	319.22	6.040	0.000	244.80	0.03	0.0102	0.0000	0.0115	0.00
69	SEABED	-221.81	-42.39	0.00	325.27	6.044	0.000	244.80	0.01	0.0102	0.0000	0.0115	0.00

70	SEABED	-227.86	-42.39	0.00	331.32	6.044	0.000	244.80	0.00	0.0102	0.0000	0.0115	0.00
71	SEABED	-233.91	-42.39	0.00	337.37	6.044	0.000	244.80	0.00	0.0102	0.0000	0.0115	0.00
72	SEABED	-239.96	-42.39	0.00	343.42	6.043	0.000	244.80	0.00	0.0102	0.0000	0.0115	0.00
73	SEABED	-246.01	-42.39	0.00	349.47	6.043	0.000	244.80	0.00	0.0102	0.0000	0.0115	0.00
74	SEABED	-252.06	-42.39	0.00	355.52	0.000	0.000	244.80	0.00	0.0102	0.0000	0.0115	0.00

S T A T I C P I P E C O O R D I N A T E S, F O R C E S A N D S T R A I N S

NODE NO.	PIPE SECTION	X COORD (M)	Y COORD (M)	VERT ANGLE (DEG)	PIPE LENGTH (M)	SUPPORT REACTION (KN)	SEPARA -TION (M)	AXIAL TENSION (KN)	BENDING MOMENT (KN-M)	TENSILE STRAIN (PCT)	BENDING STRAIN (PCT)	TOTAL STRAIN (PCT)	PERCNT ALLOW (PCT)
1	LAYBARGE	96.31	6.41	1.69	0.00	0.655	0.000	0.00	0.00	0.0000	0.0000	0.0000	0.00
3	LAYBARGE	84.28	6.05	1.70	12.04	1.244	0.000	-0.04	0.00	0.0000	0.0000	0.0000	0.00
5	LAYBARGE	73.45	5.73	1.89	22.87	1.315	0.000	-0.08	0.00	0.0000	0.0000	0.0000	0.00
7	TENSIONR	60.11	5.24	2.21	36.23	1.705	0.000	200.97	0.00	0.0000	0.0000	0.0000	0.00
9	LAYBARGE	51.10	4.88	2.24	45.24	0.000	0.000	200.93	0.00	0.0000	0.0000	0.0000	0.00
10	LAYBARGE	46.45	4.70	2.09	49.89	0.363	0.000	200.92	0.00	0.0000	0.0000	0.0000	0.00
12	LAYBARGE	38.36	4.41	1.96	57.99	0.000	0.000	200.88	0.00	0.0000	0.0000	0.0000	0.00
13	LAYBARGE	35.36	4.31	2.61	60.99	5.797	0.000	200.86	0.00	0.0000	0.0000	0.0000	0.00
15	LAYBARGE	26.35	3.79	3.25	70.02	0.000	0.000	200.82	0.00	0.0000	0.0000	0.0000	0.00
16	LAYBARGE	23.33	3.62	5.28	73.04	15.671	0.000	200.66	0.00	0.0000	0.0000	0.0000	0.00
18	LAYBARGE	11.93	2.14	7.29	84.54	0.000	0.000	200.66	0.00	0.0000	0.0000	0.0000	0.00
19	LAYBARGE	8.89	1.76	8.34	87.60	8.465	0.000	200.57	0.00	0.0000	0.0000	0.0000	0.00
21	LAYBARGE	6.11	1.29	9.46	90.42	0.000	0.000	200.57	0.00	0.0000	0.0000	0.0000	0.00
22	LAYBARGE	3.09	0.79	9.32	93.49	0.000	0.172	200.51	0.00	0.0000	0.0000	0.0000	0.00
24	LAYBARGE	-6.91	-0.83	9.15	103.61	0.000	0.000	200.35	0.00	0.0000	0.0000	0.0000	0.00
27	STINGER	-7.60	-0.94	9.00	104.31	0.000	0.230	200.34	0.00	0.0000	0.0000	0.0000	0.00
29	STINGER	-16.63	-2.36	12.43	113.46	25.252	0.000	199.81	0.00	0.0000	0.0000	0.0000	0.00
32	STINGER	-26.25	-5.11	19.94	123.46	28.978	0.000	199.42	0.00	0.0000	0.0000	0.0000	0.00
34	STINGER	-36.24	-9.55	27.97	134.40	28.453	0.000	199.01	0.00	0.0000	0.0000	0.0000	0.00
36	STINGER	-38.81	-11.15	31.94	137.43	0.000	0.030	199.35	0.00	0.0000	0.0000	0.0000	0.00
38	SAGBEND	-41.00	-12.52	29.13	140.02	0.000	0.000	198.99	0.00	0.0089	0.0000	0.0093	0.00
39	SAGBEND	-44.29	-14.34	28.97	143.78	0.000	0.000	197.15	30.42	0.0088	0.0228	0.0319	0.00
40	SAGBEND	-49.60	-17.24	28.23	149.83	0.000	0.000	194.19	62.43	0.0086	0.0467	0.0557	0.00
41	SAGBEND	-54.95	-20.05	27.10	155.88	0.000	0.000	191.32	81.72	0.0084	0.0611	0.0700	0.00
42	SAGBEND	-60.37	-22.75	25.73	161.93	0.000	0.000	188.58	93.88	0.0081	0.0702	0.0790	0.00
43	SAGBEND	-65.85	-25.30	24.21	167.98	0.000	0.000	185.99	101.98	0.0080	0.0763	0.0849	0.00
44	SAGBEND	-71.41	-27.71	22.58	174.03	0.000	0.000	183.56	107.73	0.0078	0.0806	0.0891	0.00
45	SAGBEND	-77.03	-29.95	20.88	180.08	0.000	0.000	181.30	112.08	0.0076	0.0838	0.0922	0.00
46	SAGBEND	-82.71	-32.01	19.11	186.13	0.000	0.000	179.22	115.53	0.0075	0.0864	0.0947	0.00
47	SAGBEND	-88.46	-33.90	17.30	192.18	0.000	0.000	177.32	118.32	0.0073	0.0885	0.0967	0.00
48	SAGBEND	-94.26	-35.61	15.44	198.23	0.000	0.000	175.60	120.56	0.0072	0.0902	0.0983	0.00
49	SAGBEND	-100.12	-37.12	13.56	204.28	0.000	0.000	174.08	122.22	0.0071	0.0914	0.0995	0.00
50	SAGBEND	-106.02	-38.45	11.65	210.33	0.000	0.000	172.75	123.17	0.0070	0.0921	0.1001	0.00
51	SAGBEND	-111.97	-39.57	9.74	216.38	0.000	0.000	171.63	123.15	0.0069	0.0921	0.1000	0.00
52	SAGBEND	-117.95	-40.49	7.84	222.43	0.000	0.000	170.72	121.67	0.0068	0.0910	0.0989	0.00
53	SAGBEND	-123.95	-41.22	5.98	228.48	0.000	0.000	170.01	117.95	0.0068	0.0882	0.0961	0.00
54	SAGBEND	-129.98	-41.76	4.20	234.53	0.000	0.000	169.51	110.64	0.0067	0.0827	0.0906	0.00
55	SAGBEND	-136.02	-42.11	2.58	240.58	0.000	0.000	169.22	97.45	0.0067	0.0729	0.0807	0.00
56	SAGBEND	-142.06	-42.31	1.23	246.63	0.373	0.000	169.11	74.53	0.0067	0.0557	0.0636	0.00
57	SEABED	-148.11	-42.39	0.34	252.68	5.677	0.000	169.14	38.45	0.0067	0.0288	0.0366	0.00
58	SEABED	-154.16	-42.40	-0.01	258.73	8.368	0.000	169.18	10.40	0.0067	0.0078	0.0157	0.00
59	SEABED	-160.21	-42.40	-0.07	264.78	7.576	0.000	169.18	-0.61	0.0067	-0.0005	0.0085	0.00

S T A T I C P I P E C O O R D I N A T E S, F O R C E S A N D S T R A I N S

NODE NO.	PIPE SECTION	X COORD (M)	Y COORD (M)	VERT ANGLE (DEG)	PIPE LENGTH (M)	SUPPORT REACTION (KN)	SEPARA -TION (M)	AXIAL TENSION (KN)	BENDING MOMENT (KN-M)	TENSILE STRAIN (PCT)	BENDING STRAIN (PCT)	TOTAL STRAIN (PCT)	PERCNT ALLOW (PCT)
60	SEABED	-166.26	-42.39	-0.04	270.83	6.571	0.000	169.18	-2.30	0.0067	-0.0017	0.0097	0.00
61	SEABED	-172.31	-42.39	-0.01	276.88	6.090	0.000	169.18	-1.33	0.0067	-0.0010	0.0090	0.00
62	SEABED	-178.36	-42.39	0.00	282.93	5.975	0.000	169.18	-0.40	0.0067	-0.0003	0.0083	0.00
63	SEABED	-184.41	-42.39	0.00	288.98	5.992	0.000	169.18	-0.01	0.0067	0.0000	0.0081	0.00
64	SEABED	-190.46	-42.39	0.00	295.03	6.024	0.000	169.18	0.07	0.0067	0.0001	0.0081	0.00
65	SEABED	-196.51	-42.39	0.00	301.08	6.041	0.000	169.18	0.05	0.0067	0.0000	0.0081	0.00
66	SEABED	-202.56	-42.39	0.00	307.13	6.045	0.000	169.18	0.02	0.0067	0.0000	0.0081	0.00
67	SEABED	-208.61	-42.39	0.00	313.18	6.045	0.000	169.18	0.00	0.0067	0.0000	0.0080	0.00
68	SEABED	-214.66	-42.39	0.00	319.23	6.044	0.000	169.18	0.00	0.0067	0.0000	0.0080	0.00
69	SEABED	-220.71	-42.39	0.00	325.28	6.044	0.000	169.18	0.00	0.0067	0.0000	0.0080	0.00
70	SEABED	-226.76	-42.39	0.00	331.33	6.043	0.000	169.18	0.00	0.0067	0.0000	0.0080	0.00
71	SEABED	-232.81	-42.39	0.00	337.38	0.000	0.000	169.18	0.00	0.0067	0.0000	0.0080	0.00

S T A T I C P I P E C O O R D I N A T E S, F O R C E S A N D S T R A I N S

NODE NO.	PIPE SECTION	X COORD (M)	Y COORD (M)	VERT ANGLE (DEG)	PIPE LENGTH (M)	SUPPORT REACTION (KN)	SEPARA -TION (M)	AXIAL TENSION (KN)	BENDING MOMENT (KN-M)	TENSILE STRAIN (PCT)	BENDING STRAIN (PCT)	TOTAL STRAIN (PCT)	PERCNT ALLOW (PCT)
1	LAYBARGE	96.31	6.41	1.69	0.00	0.655	0.000	0.00	0.00	0.0000	0.0000	0.0000	0.00
3	LAYBARGE	84.28	6.05	1.70	12.04	1.244	0.000	-0.04	0.00	0.0000	0.0000	0.0000	0.00
5	LAYBARGE	73.45	5.73	1.89	22.87	1.315	0.000	-0.08	0.00	0.0000	0.0000	0.0000	0.00
7	TENSIONR	60.11	5.24	2.21	36.23	1.705	0.000	200.97	0.00	0.0000	0.0000	0.0000	0.00
9	LAYBARGE	51.10	4.88	2.24	45.24	0.000	0.000	200.93	0.00	0.0000	0.0000	0.0000	0.00
10	LAYBARGE	46.45	4.70	2.09	49.89	0.363	0.000	200.92	0.00	0.0000	0.0000	0.0000	0.00
12	LAYBARGE	38.36	4.41	1.96	57.99	0.000	0.000	200.88	0.00	0.0000	0.0000	0.0000	0.00
13	LAYBARGE	35.36	4.31	2.61	60.99	5.794	0.000	200.86	0.00	0.0000	0.0000	0.0000	0.00
15	LAYBARGE	26.35	3.79	3.25	70.02	0.000	0.000	200.82	0.00	0.0000	0.0000	0.0000	0.00
16	LAYBARGE	23.33	3.62	4.38	73.04	9.395	0.000	200.75	0.00	0.0000	0.0000	0.0000	0.00
18	LAYBARGE	11.89	2.50	5.50	84.54	0.000	0.000	200.69	0.00	0.0000	0.0000	0.0000	0.00
19	LAYBARGE	8.84	2.21	5.34	87.60	0.000	0.456	200.66	0.00	0.0000	0.0000	0.0000	0.00
21	LAYBARGE	6.03	1.95	5.25	90.42	0.000	0.000	200.63	0.00	0.0000	0.0000	0.0000	0.00
22	LAYBARGE	3.01	1.68	5.10	93.45	0.000	1.060	200.60	0.00	0.0000	0.0000	0.0000	0.00
24	LAYBARGE	-7.08	0.79	4.92	103.58	0.000	0.000	200.51	0.00	0.0000	0.0000	0.0000	0.00
27	STINGER	-7.52	0.76	4.76	104.02	0.000	1.022	200.50	0.00	0.0000	0.0000	0.0000	0.00
29	STINGER	-16.59	0.01	5.70	113.12	8.068	0.000	200.38	0.00	0.0000	0.0000	0.0000	0.00
32	STINGER	-26.53	-1.16	10.76	123.13	29.163	0.000	199.78	0.00	0.0000	0.0000	0.0000	0.00
34	STINGER	-37.10	-3.95	18.93	134.08	29.480	0.000	199.49	0.00	0.0000	0.0000	0.0000	0.00
36	STINGER	-39.88	-5.14	23.00	137.11	0.000	0.016	199.91	0.00	0.0000	0.0000	0.0000	0.00
38	SAGBEND	-46.02	-7.74	22.86	143.77	0.000	0.000	199.66	0.00	0.0000	0.0000	0.0000	0.00
39	SAGBEND	-51.60	-10.08	22.71	149.82	0.000	0.000	199.44	0.00	0.0000	0.0000	0.0000	0.00
40	SAGBEND	-57.18	-12.41	22.56	155.87	0.000	0.000	199.22	0.00	0.0000	0.0000	0.0000	0.00
41	SAGBEND	-62.77	-14.72	22.40	161.92	0.000	0.000	199.01	0.00	0.0000	0.0000	0.0000	0.00
42	SAGBEND	-68.37	-17.02	22.25	167.97	0.000	0.000	198.79	0.00	0.0000	0.0000	0.0000	0.00
43	SAGBEND	-73.97	-19.30	22.10	174.02	0.000	0.000	198.57	0.00	0.0000	0.0000	0.0000	0.00
44	SAGBEND	-79.58	-21.57	21.95	180.07	0.000	0.000	198.36	0.00	0.0000	0.0000	0.0000	0.00
45	SAGBEND	-85.20	-23.82	21.79	186.12	0.000	0.000	198.15	0.00	0.0000	0.0000	0.0000	0.00
46	SAGBEND	-90.82	-26.06	21.64	192.17	0.000	0.000	197.93	0.00	0.0000	0.0000	0.0000	0.00
47	SAGBEND	-94.46	-27.51	21.54	196.09	0.000	0.000	197.80	0.00	0.0000	0.0000	0.0000	0.00
48	SAGBEND	-98.11	-28.94	18.46	200.02	0.000	0.000	197.39	0.00	0.0084	0.0000	0.0092	0.00
49	SAGBEND	-102.15	-30.28	18.25	204.27	0.000	0.000	196.02	36.20	0.0083	0.0271	0.0362	0.00
50	SAGBEND	-107.91	-32.14	17.41	210.32	0.000	0.000	194.09	68.69	0.0081	0.0514	0.0604	0.00
51	SAGBEND	-113.70	-33.89	16.19	216.37	0.000	0.000	192.28	87.77	0.0080	0.0656	0.0746	0.00
52	SAGBEND	-119.53	-35.51	14.73	222.42	0.000	0.000	190.62	99.17	0.0079	0.0742	0.0830	0.00
53	SAGBEND	-125.40	-36.96	13.13	228.47	0.000	0.000	189.13	106.05	0.0078	0.0793	0.0881	0.00
54	SAGBEND	-131.31	-38.25	11.46	234.52	0.000	0.000	187.82	110.10	0.0077	0.0823	0.0910	0.00
55	SAGBEND	-137.26	-39.37	9.73	240.57	0.000	0.000	186.70	112.13	0.0076	0.0839	0.0925	0.00
56	SAGBEND	-143.24	-40.30	7.99	246.62	0.000	0.000	185.77	112.38	0.0075	0.0841	0.0927	0.00
57	SAGBEND	-149.24	-41.05	6.25	252.67	0.000	0.000	185.03	110.57	0.0075	0.0827	0.0913	0.00
58	SAGBEND	-155.26	-41.62	4.57	258.72	0.000	0.000	184.48	105.85	0.0074	0.0792	0.0877	0.00
59	SAGBEND	-161.30	-42.02	2.99	264.77	0.000	0.000	184.13	96.56	0.0074	0.0722	0.0807	0.00
60	SAGBEND	-167.35	-42.26	1.62	270.82	0.012	0.000	183.95	79.69	0.0074	0.0596	0.0681	0.00

S T A T I C P I P E C O O R D I N A T E S, F O R C E S A N D S T R A I N S

NODE NO.	PIPE SECTION	X COORD (M)	Y COORD (M)	VERT ANGLE (DEG)	PIPE LENGTH (M)	SUPPORT REACTION (KN)	SEPARA -TION (M)	AXIAL TENSION (KN)	BENDING MOMENT (KN-M)	TENSILE STRAIN (PCT)	BENDING STRAIN (PCT)	TOTAL STRAIN (PCT)	PERCNT ALLOW (PCT)
61	SEABED	-173.39	-42.37	0.59	276.87	3.075	0.000	183.93	50.18	0.0074	0.0375	0.0461	0.00
62	SEABED	-179.44	-42.40	0.07	282.92	7.815	0.000	183.98	18.10	0.0074	0.0135	0.0221	0.00
63	SEABED	-185.49	-42.40	-0.06	288.97	7.867	0.000	183.99	2.10	0.0074	0.0016	0.0103	0.00
64	SEABED	-191.54	-42.39	-0.05	295.02	6.858	0.000	183.98	-2.01	0.0074	-0.0015	0.0102	0.00
65	SEABED	-197.59	-42.39	-0.02	301.07	6.218	0.000	183.98	-1.64	0.0074	-0.0012	0.0099	0.00
66	SEABED	-203.64	-42.39	0.00	307.12	6.003	0.000	183.98	-0.66	0.0074	-0.0005	0.0092	0.00
67	SEABED	-209.69	-42.39	0.00	313.17	5.986	0.000	183.98	-0.11	0.0074	-0.0001	0.0088	0.00
68	SEABED	-215.74	-42.39	0.00	319.22	6.015	0.000	183.98	0.05	0.0074	0.0000	0.0088	0.00
69	SEABED	-221.79	-42.39	0.00	325.27	6.036	0.000	183.98	0.05	0.0074	0.0000	0.0088	0.00

70	SEABED	-227.84	-42.39	0.00	331.32	6.044	0.000	183.98	0.02	0.0074	0.0000	0.0087	0.00
71	SEABED	-233.89	-42.39	0.00	337.37	6.045	0.000	183.98	0.00	0.0074	0.0000	0.0087	0.00
72	SEABED	-239.94	-42.39	0.00	343.42	6.044	0.000	183.98	0.00	0.0074	0.0000	0.0087	0.00
73	SEABED	-245.99	-42.39	0.00	349.47	6.044	0.000	183.98	0.00	0.0074	0.0000	0.0087	0.00
74	SEABED	-252.04	-42.39	0.00	355.52	6.043	0.000	183.98	0.00	0.0074	0.0000	0.0087	0.00
75	SEABED	-258.09	-42.39	0.00	361.57	6.043	0.000	183.98	0.00	0.0074	0.0000	0.0087	0.00
76	SEABED	-264.14	-42.39	0.00	367.62	6.043	0.000	183.98	0.00	0.0074	0.0000	0.0087	0.00
77	SEABED	-270.19	-42.39	0.00	373.67	6.043	0.000	183.98	0.00	0.0074	0.0000	0.0087	0.00
78	SEABED	-276.24	-42.39	0.00	379.72	6.043	0.000	183.98	0.00	0.0074	0.0000	0.0087	0.00
79	SEABED	-282.29	-42.39	0.00	385.77	6.043	0.000	183.98	0.00	0.0074	0.0000	0.0087	0.00
80	SEABED	-288.34	-42.39	0.00	391.82	6.043	0.000	183.98	0.00	0.0074	0.0000	0.0087	0.00
81	SEABED	-294.39	-42.39	0.00	397.87	6.043	0.000	183.98	0.00	0.0074	0.0000	0.0087	0.00
82	SEABED	-300.44	-42.39	0.00	403.92	6.043	0.000	183.98	0.00	0.0074	0.0000	0.0087	0.00
83	SEABED	-306.49	-42.39	0.00	409.97	6.043	0.000	183.98	0.00	0.0074	0.0000	0.0087	0.00
84	SEABED	-312.54	-42.39	0.00	416.02	6.043	0.000	183.98	0.00	0.0074	0.0000	0.0087	0.00
85	SEABED	-318.59	-42.39	0.00	422.07	6.043	0.000	183.98	0.00	0.0074	0.0000	0.0087	0.00
86	SEABED	-324.64	-42.39	0.00	428.12	6.043	0.000	183.98	0.00	0.0074	0.0000	0.0087	0.00
87	SEABED	-330.69	-42.39	0.00	434.17	6.043	0.000	183.98	0.00	0.0074	0.0000	0.0087	0.00
88	SEABED	-336.74	-42.39	0.00	440.22	6.043	0.000	183.98	0.00	0.0074	0.0000	0.0087	0.00
89	SEABED	-342.79	-42.39	0.00	446.27	6.043	0.000	183.98	0.00	0.0074	0.0000	0.0087	0.00
90	SEABED	-348.84	-42.39	0.00	452.32	6.043	0.000	183.98	0.00	0.0074	0.0000	0.0087	0.00
91	SEABED	-354.89	-42.39	0.00	458.37	6.043	0.000	183.98	0.00	0.0074	0.0000	0.0087	0.00
92	SEABED	-360.94	-42.39	0.00	464.42	6.043	0.000	183.98	0.00	0.0074	0.0000	0.0087	0.00
93	SEABED	-366.99	-42.39	0.00	470.47	6.043	0.000	183.98	0.00	0.0074	0.0000	0.0087	0.00
94	SEABED	-373.04	-42.39	0.00	476.52	6.043	0.000	183.98	0.00	0.0074	0.0000	0.0087	0.00
95	SEABED	-379.09	-42.39	0.00	482.57	6.043	0.000	183.98	0.00	0.0074	0.0000	0.0087	0.00
96	SEABED	-385.14	-42.39	0.00	488.62	6.043	0.000	183.98	0.00	0.0074	0.0000	0.0087	0.00
97	SEABED	-391.19	-42.39	0.00	494.67	6.043	0.000	183.98	0.00	0.0074	0.0000	0.0087	0.00
98	SEABED	-397.24	-42.39	0.00	500.72	6.043	0.000	183.98	0.00	0.0074	0.0000	0.0087	0.00
99	SEABED	-403.29	-42.39	0.00	506.77	6.043	0.000	183.98	0.00	0.0074	0.0000	0.0087	0.00
100	SEABED	-409.34	-42.39	0.00	512.82	6.043	0.000	183.98	0.00	0.0074	0.0000	0.0087	0.00
101	SEABED	-415.39	-42.39	0.00	518.87	6.043	0.000	183.98	0.00	0.0074	0.0000	0.0087	0.00
102	SEABED	-421.44	-42.39	0.00	524.92	6.043	0.000	183.98	0.00	0.0074	0.0000	0.0087	0.00
103	SEABED	-427.49	-42.39	0.00	530.97	6.043	0.000	183.98	0.00	0.0074	0.0000	0.0087	0.00
104	SEABED	-433.54	-42.39	0.00	537.02	6.043	0.000	183.98	0.00	0.0074	0.0000	0.0087	0.00
105	SEABED	-439.59	-42.39	0.00	543.07	6.043	0.000	183.98	0.00	0.0074	0.0000	0.0087	0.00

S T A T I C P I P E C O O R D I N A T E S, F O R C E S A N D S T R A I N S

NODE NO.	PIPE SECTION	X COORD (M)	Y COORD (M)	VERT ANGLE (DEG)	PIPE LENGTH (M)	SUPPORT REACTION (KN)	SEPARA -TION (M)	AXIAL TENSION (KN)	BENDING MOMENT (KN-M)	TENSILE STRAIN (PCT)	BENDING STRAIN (PCT)	TOTAL STRAIN (PCT)	PERCNT ALLOW (PCT)
106	SEABED	-445.64	-42.39	0.00	549.12	6.043	0.000	183.98	0.00	0.0074	0.0000	0.0087	0.00
107	SEABED	-451.69	-42.39	0.00	555.17	6.043	0.000	183.98	0.00	0.0074	0.0000	0.0087	0.00
108	SEABED	-457.74	-42.39	0.00	561.22	6.043	0.000	183.98	0.00	0.0074	0.0000	0.0087	0.00
109	SEABED	-463.79	-42.39	0.00	567.27	6.043	0.000	183.98	0.00	0.0074	0.0000	0.0087	0.00
110	SEABED	-469.84	-42.39	0.00	573.32	6.043	0.000	183.98	0.00	0.0074	0.0000	0.0087	0.00
111	SEABED	-475.89	-42.39	0.00	579.37	6.043	0.000	183.98	0.00	0.0074	0.0000	0.0087	0.00
112	SEABED	-481.94	-42.39	0.00	585.42	6.043	0.000	183.98	0.00	0.0074	0.0000	0.0087	0.00
113	SEABED	-487.99	-42.39	0.00	591.47	6.043	0.000	183.98	0.00	0.0074	0.0000	0.0087	0.00
114	SEABED	-494.04	-42.39	0.00	597.52	6.043	0.000	183.98	0.00	0.0074	0.0000	0.0087	0.00
115	SEABED	-500.09	-42.39	0.00	603.57	6.043	0.000	183.98	0.00	0.0074	0.0000	0.0087	0.00
116	SEABED	-506.15	-42.39	0.00	609.62	6.043	0.000	183.98	0.00	0.0074	0.0000	0.0087	0.00
117	SEABED	-512.20	-42.39	0.00	615.67	6.043	0.000	183.98	0.00	0.0074	0.0000	0.0087	0.00
118	SEABED	-518.25	-42.39	0.00	621.72	0.000	0.000	183.98	0.00	0.0074	0.0000	0.0087	0.00

S T A T I C P I P E C O O R D I N A T E S, F O R C E S A N D S T R A I N S

NODE NO.	PIPE SECTION	X COORD (M)	Y COORD (M)	VERT ANGLE (DEG)	PIPE LENGTH (M)	SUPPORT REACTION (KN)	SEPARA -TION (M)	AXIAL TENSION (KN)	BENDING MOMENT (KN-M)	TENSILE STRAIN (PCT)	BENDING STRAIN (PCT)	TOTAL STRAIN (PCT)	PERCNT ALLOW (PCT)
1	LAYBARGE	96.31	6.41	1.69	0.00	0.655	0.000	0.00	0.00	0.0000	0.0000	0.0000	0.00
3	LAYBARGE	84.28	6.05	1.70	12.04	1.244	0.000	-0.04	0.00	0.0000	0.0000	0.0000	0.00
5	LAYBARGE	73.45	5.73	1.89	22.87	1.315	0.000	-0.08	0.00	0.0000	0.0000	0.0000	0.00
7	TENSIONR	60.11	5.24	2.23	36.23	1.560	0.000	120.57	0.00	0.0000	0.0000	0.0000	0.00
9	LAYBARGE	51.10	4.87	2.22	45.24	0.000	0.000	120.53	0.00	0.0000	0.0000	0.0000	0.00
10	LAYBARGE	46.45	4.70	2.06	49.89	0.757	0.000	120.52	0.00	0.0000	0.0000	0.0000	0.00
12	LAYBARGE	38.36	4.41	1.93	57.99	0.000	0.000	120.48	0.00	0.0000	0.0000	0.0000	0.00
13	LAYBARGE	35.36	4.31	2.58	60.99	3.978	0.000	120.46	0.00	0.0000	0.0000	0.0000	0.00
15	LAYBARGE	26.35	3.78	3.22	70.02	0.000	0.000	120.42	0.00	0.0000	0.0000	0.0000	0.00
16	LAYBARGE	23.33	3.62	4.47	73.04	6.712	0.000	120.36	0.00	0.0000	0.0000	0.0000	0.00
18	LAYBARGE	11.89	2.44	5.69	84.54	0.000	0.000	120.29	0.00	0.0000	0.0000	0.0000	0.00
19	LAYBARGE	8.84	2.15	5.43	87.60	0.000	0.395	120.26	0.00	0.0000	0.0000	0.0000	0.00
21	LAYBARGE	6.04	1.89	5.28	90.42	0.000	0.000	120.23	0.00	0.0000	0.0000	0.0000	0.00
22	LAYBARGE	3.02	1.61	5.03	93.45	0.000	0.996	120.20	0.00	0.0000	0.0000	0.0000	0.00
24	LAYBARGE	-7.07	0.76	4.73	103.57	0.000	0.000	120.11	0.00	0.0000	0.0000	0.0000	0.00
27	STINGER	-7.51	0.72	4.47	104.02	0.000	0.978	120.10	0.00	0.0000	0.0000	0.0000	0.00
29	STINGER	-16.57	0.03	4.96	113.11	3.565	0.000	120.01	0.00	0.0000	0.0000	0.0000	0.00
32	STINGER	-26.50	-0.94	9.12	123.09	15.758	0.000	119.68	0.00	0.0000	0.0000	0.0000	0.00
34	STINGER	-37.17	-3.33	16.94	134.03	18.522	0.000	119.34	0.00	0.0000	0.0000	0.0000	0.00
36	STINGER	-39.99	-4.43	24.29	137.06	13.225	0.000	119.40	0.00	0.0000	0.0000	0.0000	0.00
38	SAGBEND	-45.95	-7.51	27.23	143.77	0.000	0.000	119.29	0.00	0.0000	0.0000	0.0000	0.00
39	SAGBEND	-51.34	-10.27	26.98	149.82	0.000	0.000	119.03	0.00	0.0000	0.0000	0.0000	0.00
40	SAGBEND	-56.74	-13.00	26.74	155.87	0.000	0.000	118.78	0.00	0.0000	0.0000	0.0000	0.00
41	SAGBEND	-62.15	-15.71	26.49	161.92	0.000	0.000	118.52	0.00	0.0000	0.0000	0.0000	0.00
42	SAGBEND	-67.57	-18.40	26.24	167.97	0.000	0.000	118.27	0.00	0.0000	0.0000	0.0000	0.00
43	SAGBEND	-73.00	-21.06	25.99	174.02	0.000	0.000	118.01	0.00	0.0000	0.0000	0.0000	0.00
44	SAGBEND	-78.44	-23.70	25.74	180.07	0.000	0.000	117.76	0.00	0.0000	0.0000	0.0000	0.00
45	SAGBEND	-83.90	-26.32	25.49	186.12	0.000	0.000	117.52	0.00	0.0000	0.0000	0.0000	0.00
46	SAGBEND	-89.36	-28.91	25.24	192.17	0.000	0.000	117.27	0.00	0.0000	0.0000	0.0000	0.00
47	SAGBEND	-92.91	-30.58	25.08	196.09	0.000	0.000	117.12	0.00	0.0000	0.0000	0.0000	0.00
48	SAGBEND	-96.47	-32.24	18.37	200.02	0.000	0.000	116.20	0.00	0.0045	0.0000	0.0056	0.00
49	SAGBEND	-100.51	-33.57	18.09	204.27	0.000	0.000	114.81	48.90	0.0044	0.0366	0.0419	0.00
50	SAGBEND	-106.28	-35.40	16.93	210.32	0.000	0.000	112.83	97.27	0.0043	0.0728	0.0780	0.00
51	SAGBEND	-112.09	-37.07	15.17	216.37	0.000	0.000	111.00	128.35	0.0041	0.0960	0.1011	0.00
52	SAGBEND	-117.96	-38.55	13.01	222.42	0.000	0.000	109.41	147.29	0.0040	0.1102	0.1152	0.00
53	SAGBEND	-123.88	-39.79	10.64	228.47	0.000	0.000	108.10	156.85	0.0039	0.1173	0.1223	0.00
54	SAGBEND	-129.85	-40.78	8.19	234.52	0.000	0.000	107.10	158.14	0.0039	0.1183	0.1232	0.00
55	SAGBEND	-135.85	-41.52	5.78	240.57	0.000	0.000	106.42	150.86	0.0038	0.1128	0.1177	0.00
56	SAGBEND	-141.88	-42.01	3.56	246.62	0.000	0.000	106.04	133.37	0.0038	0.0997	0.1046	0.00
57	SAGBEND	-147.92	-42.28	1.71	252.67	0.224	0.000	105.93	102.37	0.0038	0.0766	0.0815	0.00
58	SEABED	-153.97	-42.39	0.48	258.72	5.923	0.000	106.01	54.46	0.0038	0.0407	0.0457	0.00
59	SEABED	-160.02	-42.41	-0.03	264.77	9.520	0.000	106.08	14.94	0.0038	0.0112	0.0162	0.00

S T A T I C P I P E C O O R D I N A T E S, F O R C E S A N D S T R A I N S

NODE NO.	PIPE SECTION	X COORD (M)	Y COORD (M)	VERT ANGLE (DEG)	PIPE LENGTH (M)	SUPPORT REACTION (KN)	SEPARA -TION (M)	AXIAL TENSION (KN)	BENDING MOMENT (KN-M)	TENSILE STRAIN (PCT)	BENDING STRAIN (PCT)	TOTAL STRAIN (PCT)	PERCNT ALLOW (PCT)
60	SEABED	-166.07	-42.40	-0.11	270.82	8.280	0.000	106.08	-1.06	0.0038	-0.0008	0.0060	0.00
61	SEABED	-172.12	-42.39	-0.06	276.87	6.777	0.000	106.08	-3.51	0.0038	-0.0026	0.0077	0.00
62	SEABED	-178.17	-42.39	-0.02	282.92	6.075	0.000	106.08	-1.99	0.0038	-0.0015	0.0066	0.00
63	SEABED	-184.22	-42.39	0.00	288.97	5.923	0.000	106.08	-0.57	0.0038	-0.0004	0.0056	0.00
64	SEABED	-190.27	-42.39	0.00	295.02	5.963	0.000	106.08	0.02	0.0038	0.0000	0.0053	0.00
65	SEABED	-196.32	-42.39	0.00	301.07	6.016	0.000	106.08	0.12	0.0038	0.0001	0.0053	0.00
66	SEABED	-202.37	-42.39	0.00	307.12	6.042	0.000	106.08	0.07	0.0038	0.0001	0.0053	0.00
67	SEABED	-208.42	-42.39	0.00	313.17	6.048	0.000	106.08	0.02	0.0038	0.0000	0.0053	0.00
68	SEABED	-214.47	-42.39	0.00	319.22	6.047	0.000	106.08	0.00	0.0038	0.0000	0.0052	0.00
69	SEABED	-220.52	-42.39	0.00	325.27	6.045	0.000	106.08	0.00	0.0038	0.0000	0.0052	0.00
70	SEABED	-226.57	-42.39	0.00	331.32	6.044	0.000	106.08	0.00	0.0038	0.0000	0.0052	0.00
71	SEABED	-232.62	-42.39	0.00	337.37	6.043	0.000	106.08	0.00	0.0038	0.0000	0.0052	0.00
72	SEABED	-238.67	-42.39	0.00	343.42	6.044	0.000	106.08	0.00	0.0038	0.0000	0.0052	0.00
73	SEABED	-244.72	-42.39	0.00	349.47	6.044	0.000	106.08	0.00	0.0038	0.0000	0.0052	0.00
74	SEABED	-250.77	-42.39	0.00	355.52	6.044	0.000	106.08	0.00	0.0038	0.0000	0.0052	0.00
75	SEABED	-256.82	-42.39	0.00	361.57	6.044	0.000	106.08	0.00	0.0038	0.0000	0.0052	0.00
76	SEABED	-262.87	-42.39	0.00	367.62	6.044	0.000	106.08	0.00	0.0038	0.0000	0.0052	0.00
77	SEABED	-268.92	-42.39	0.00	373.67	6.044	0.000	106.08	0.00	0.0038	0.0000	0.0052	0.00
78	SEABED	-274.97	-42.39	0.00	379.72	6.044	0.000	106.08	0.00	0.0038	0.0000	0.0052	0.00
79	SEABED	-281.02	-42.39	0.00	385.77	6.044	0.000	106.08	0.00	0.0038	0.0000	0.0052	0.00
80	SEABED	-287.07	-42.39	0.00	391.82	6.044	0.000	106.08	0.00	0.0038	0.0000	0.0052	0.00
81	SEABED	-293.12	-42.39	0.00	397.87	6.044	0.000	106.08	0.00	0.0038	0.0000	0.0052	0.00
82	SEABED	-299.17	-42.39	0.00	403.92	6.044	0.000	106.08	0.00	0.0038	0.0000	0.0052	0.00
83	SEABED	-305.22	-42.39	0.00	409.97	6.044	0.000	106.08	0.00	0.0038	0.0000	0.0052	0.00
84	SEABED	-311.27	-42.39	0.00	416.02	6.044	0.000	106.08	0.00	0.0038	0.0000	0.0052	0.00
85	SEABED	-317.32	-42.39	0.00	422.07	6.044	0.000	106.08	0.00	0.0038	0.0000	0.0052	0.00
86	SEABED	-323.37	-42.39	0.00	428.12	6.044	0.000	106.08	0.00	0.0038	0.0000	0.0052	0.00
87	SEABED	-329.42	-42.39	0.00	434.18	6.044	0.000	106.08	0.00	0.0038	0.0000	0.0052	0.00
88	SEABED	-335.47	-42.39	0.00	440.23	6.044	0.000	106.08	0.00	0.0038	0.0000	0.0052	0.00
89	SEABED	-341.52	-42.39	0.00	446.28	6.044	0.000	106.08	0.00	0.0038	0.0000	0.0052	0.00
90	SEABED	-347.57	-42.39	0.00	452.33	6.044	0.000	106.08	0.00	0.0038	0.0000	0.0052	0.00
91	SEABED	-353.62	-42.39	0.00	458.38	6.044	0.000	106.08	0.00	0.0038	0.0000	0.0052	0.00
92	SEABED	-359.67	-42.39	0.00	464.43	6.044	0.000	106.08	0.00	0.0038	0.0000	0.0052	0.00
93	SEABED	-365.72	-42.39	0.00	470.48	6.044	0.000	106.08	0.00	0.0038	0.0000	0.0052	0.00
94	SEABED	-371.77	-42.39	0.00	476.53	6.044	0.000	106.08	0.00	0.0038	0.0000	0.0052	0.00
95	SEABED	-377.82	-42.39	0.00	482.58	6.044	0.000	106.08	0.00	0.0038	0.0000	0.0052	0.00

96	SEABED	-383.87	-42.39	0.00	488.63	6.044	0.000	106.08	0.00	0.0038	0.0000	0.0052	0.00
97	SEABED	-389.92	-42.39	0.00	494.68	6.044	0.000	106.08	0.00	0.0038	0.0000	0.0052	0.00
98	SEABED	-395.97	-42.39	0.00	500.73	6.044	0.000	106.08	0.00	0.0038	0.0000	0.0052	0.00
99	SEABED	-402.02	-42.39	0.00	506.78	6.044	0.000	106.08	0.00	0.0038	0.0000	0.0052	0.00
100	SEABED	-408.07	-42.39	0.00	512.83	0.000	0.000	106.08	0.00	0.0038	0.0000	0.0052	0.00

S T A T I C P I P E C O O R D I N A T E S, F O R C E S A N D S T R A I N S

NODE NO.	PIPE SECTION	X COORD (M)	Y COORD (M)	VERT ANGLE (DEG)	PIPE LENGTH (M)	SUPPORT REACTION (KN)	SEPARA -TION (M)	AXIAL TENSION (KN)	BENDING MOMENT (KN-M)	TENSILE STRAIN (PCT)	BENDING STRAIN (PCT)	TOTAL STRAIN (PCT)	PERCNT ALLOW (PCT)
1	LAYBARGE	96.31	6.41	1.69	0.00	0.655	0.000	0.00	0.00	0.0000	0.0000	0.0000	0.00
3	LAYBARGE	84.28	6.05	1.70	12.04	1.244	0.000	-0.04	0.00	0.0000	0.0000	0.0000	0.00
5	LAYBARGE	73.45	5.73	1.89	22.87	1.315	0.000	-0.08	0.00	0.0000	0.0000	0.0000	0.00
7	TENSIONR	60.11	5.24	2.23	36.23	1.560	0.000	120.57	0.00	0.0000	0.0000	0.0000	0.00
9	LAYBARGE	51.10	4.87	2.22	45.24	0.000	0.000	120.53	0.00	0.0000	0.0000	0.0000	0.00
10	LAYBARGE	46.45	4.70	2.06	49.89	0.757	0.000	120.52	0.00	0.0000	0.0000	0.0000	0.00
12	LAYBARGE	38.36	4.41	1.93	57.99	0.000	0.000	120.48	0.00	0.0000	0.0000	0.0000	0.00
13	LAYBARGE	35.36	4.31	2.58	60.99	3.977	0.000	120.46	0.00	0.0000	0.0000	0.0000	0.00
15	LAYBARGE	26.35	3.78	3.21	70.02	0.000	0.000	120.42	0.00	0.0000	0.0000	0.0000	0.00
16	LAYBARGE	23.33	3.62	4.08	73.04	5.079	0.000	120.38	0.00	0.0000	0.0000	0.0000	0.00
18	LAYBARGE	11.88	2.60	4.91	84.54	0.000	0.000	120.30	0.00	0.0000	0.0000	0.0000	0.00
19	LAYBARGE	8.85	2.35	4.65	87.58	0.000	0.593	120.28	0.00	0.0000	0.0000	0.0000	0.00
21	LAYBARGE	6.04	2.12	4.50	90.40	0.000	0.000	120.25	0.00	0.0000	0.0000	0.0000	0.00
22	LAYBARGE	3.02	1.89	4.25	93.42	0.000	1.273	120.23	0.00	0.0000	0.0000	0.0000	0.00
24	LAYBARGE	-7.08	1.17	3.95	103.55	0.000	0.000	120.15	0.00	0.0000	0.0000	0.0000	0.00
27	STINGER	-7.51	1.14	3.69	103.99	0.000	1.394	120.14	0.00	0.0000	0.0000	0.0000	0.00
29	STINGER	-16.59	0.58	3.32	113.08	0.000	0.531	120.08	0.00	0.0000	0.0000	0.0000	0.00
32	STINGER	-26.43	0.05	2.82	122.93	0.000	0.045	120.03	0.00	0.0000	0.0000	0.0000	0.00
34	STINGER	-37.35	-0.44	6.73	133.86	18.080	0.000	119.62	0.00	0.0000	0.0000	0.0000	0.00
36	STINGER	-40.32	-1.02	14.55	136.90	15.736	0.000	119.64	0.00	0.0000	0.0000	0.0000	0.00
38	SAGBEND	-46.84	-3.16	18.07	143.76	0.000	0.000	119.70	0.00	0.0000	0.0000	0.0000	0.00
39	SAGBEND	-52.60	-5.02	17.80	149.81	0.000	0.000	119.53	0.00	0.0000	0.0000	0.0000	0.00
40	SAGBEND	-58.37	-6.86	17.54	155.86	0.000	0.000	119.35	0.00	0.0000	0.0000	0.0000	0.00
41	SAGBEND	-64.14	-8.67	17.28	161.91	0.000	0.000	119.18	0.00	0.0000	0.0000	0.0000	0.00
42	SAGBEND	-69.92	-10.45	17.01	167.96	0.000	0.000	119.01	0.00	0.0000	0.0000	0.0000	0.00
43	SAGBEND	-75.71	-12.21	16.75	174.01	0.000	0.000	118.85	0.00	0.0000	0.0000	0.0000	0.00
44	SAGBEND	-81.51	-13.94	16.48	180.06	0.000	0.000	118.68	0.00	0.0000	0.0000	0.0000	0.00
45	SAGBEND	-87.31	-15.64	16.22	186.11	0.000	0.000	118.52	0.00	0.0000	0.0000	0.0000	0.00
46	SAGBEND	-93.12	-17.32	15.95	192.16	0.000	0.000	118.37	0.00	0.0000	0.0000	0.0000	0.00
47	SAGBEND	-98.95	-18.97	15.69	198.21	0.000	0.000	118.21	0.00	0.0000	0.0000	0.0000	0.00
48	SAGBEND	-104.77	-20.59	15.42	204.26	0.000	0.000	118.06	0.00	0.0000	0.0000	0.0000	0.00
49	SAGBEND	-110.61	-22.19	15.15	210.31	0.000	0.000	117.91	0.00	0.0000	0.0000	0.0000	0.00
50	SAGBEND	-116.45	-23.75	14.88	216.36	0.000	0.000	117.76	0.00	0.0000	0.0000	0.0000	0.00
51	SAGBEND	-122.30	-25.29	14.61	222.41	0.000	0.000	117.61	0.00	0.0000	0.0000	0.0000	0.00
52	SAGBEND	-128.16	-26.81	14.34	228.46	0.000	0.000	117.47	0.00	0.0000	0.0000	0.0000	0.00
53	SAGBEND	-134.03	-28.29	14.07	234.51	0.000	0.000	117.33	0.00	0.0000	0.0000	0.0000	0.00
54	SAGBEND	-139.90	-29.75	13.80	240.56	0.000	0.000	117.19	0.00	0.0000	0.0000	0.0000	0.00
55	SAGBEND	-145.78	-31.18	13.53	246.61	0.000	0.000	117.06	0.00	0.0000	0.0000	0.0000	0.00
56	SAGBEND	-151.66	-32.58	13.26	252.66	0.000	0.000	116.92	0.00	0.0000	0.0000	0.0000	0.00
57	SAGBEND	-157.55	-33.95	12.99	258.71	0.000	0.000	116.79	0.00	0.0000	0.0000	0.0000	0.00
58	SAGBEND	-163.45	-35.30	12.71	264.76	0.000	0.000	116.67	0.00	0.0000	0.0000	0.0000	0.00
59	SAGBEND	-169.36	-36.62	12.44	270.81	0.000	0.000	116.54	0.00	0.0000	0.0000	0.0000	0.00
60	SAGBEND	-175.27	-37.91	12.16	276.86	0.000	0.000	116.42	0.00	0.0000	0.0000	0.0000	0.00

S T A T I C P I P E C O O R D I N A T E S, F O R C E S A N D S T R A I N S

NODE NO.	PIPE SECTION	X COORD (M)	Y COORD (M)	VERT ANGLE (DEG)	PIPE LENGTH (M)	SUPPORT REACTION (KN)	SEPARA -TION (M)	AXIAL TENSION (KN)	BENDING MOMENT (KN-M)	TENSILE STRAIN (PCT)	BENDING STRAIN (PCT)	TOTAL STRAIN (PCT)	PERCNT ALLOW (PCT)
61	SAGBEND	-181.19	-39.17	11.89	282.91	0.000	0.000	116.30	0.00	0.0000	0.0000	0.0000	0.00
62	SAGBEND	-184.66	-39.89	11.73	286.46	0.000	0.000	116.23	0.00	0.0000	0.0000	0.0000	0.00
63	SAGBEND	-188.13	-40.61	5.74	290.01	0.000	0.000	115.57	0.00	0.0043	0.0000	0.0056	0.00
64	SAGBEND	-193.11	-41.10	5.41	295.02	0.000	0.000	115.02	47.68	0.0042	0.0357	0.0410	0.00
65	SAGBEND	-199.14	-41.62	4.39	301.07	0.000	0.000	114.41	80.35	0.0042	0.0601	0.0654	0.00
66	SAGBEND	-205.18	-42.01	3.03	307.12	0.000	0.000	113.98	91.28	0.0042	0.0683	0.0735	0.00
67	SAGBEND	-211.22	-42.26	1.66	313.17	0.028	0.000	113.76	82.45	0.0041	0.0617	0.0669	0.00
68	SEABED	-217.27	-42.37	0.58	319.22	3.696	0.000	113.75	52.51	0.0041	0.0393	0.0446	0.00
69	SEABED	-223.32	-42.40	0.05	325.27	8.389	0.000	113.80	18.31	0.0041	0.0137	0.0190	0.00
70	SEABED	-229.37	-42.40	-0.08	331.32	8.096	0.000	113.81	1.46	0.0041	0.0011	0.0066	0.00
71	SEABED	-235.42	-42.39	-0.06	337.37	6.879	0.000	113.81	-2.57	0.0041	-0.0019	0.0074	0.00
72	SEABED	-241.47	-42.39	-0.02	343.42	6.176	0.000	113.81	-1.88	0.0041	-0.0014	0.0069	0.00
73	SEABED	-247.52	-42.39	0.00	349.47	5.967	0.000	113.81	-0.69	0.0041	-0.0005	0.0061	0.00
74	SEABED	-253.57	-42.39	0.00	355.52	5.971	0.000	113.81	-0.07	0.0041	-0.0001	0.0056	0.00
75	SEABED	-259.62	-42.39	0.00	361.57	6.013	0.000	113.81	0.09	0.0041	0.0001	0.0056	0.00
76	SEABED	-265.67	-42.39	0.00	367.62	6.038	0.000	113.81	0.07	0.0041	0.0001	0.0056	0.00
77	SEABED	-271.72	-42.39	0.00	373.67	6.046	0.000	113.81	0.03	0.0041	0.0000	0.0056	0.00
78	SEABED	-277.77	-42.39	0.00	379.72	6.046	0.000	113.81	0.00	0.0041	0.0000	0.0056	0.00
79	SEABED	-283.82	-42.39	0.00	385.77	6.045	0.000	113.81	0.00	0.0041	0.0000	0.0056	0.00
80	SEABED	-289.87	-42.39	0.00	391.82	6.044	0.000	113.81	0.00	0.0041	0.0000	0.0056	0.00
81	SEABED	-295.92	-42.39	0.00	397.87	6.044	0.000	113.81	0.00	0.0041	0.0000	0.0056	0.00
82	SEABED	-301.97	-42.39	0.00	403.92	6.043	0.000	113.81	0.00	0.0041	0.0000	0.0056	0.00
83	SEABED	-308.02	-42.39	0.00	409.97	6.044	0.000	113.81	0.00	0.0041	0.0000	0.0056	0.00
84	SEABED	-314.07	-42.39	0.00	416.02	6.044	0.000	113.81	0.00	0.0041	0.0000	0.0056	0.00
85	SEABED	-320.12	-42.39	0.00	422.07	6.044	0.000	113.81	0.00	0.0041	0.0000	0.0056	0.00
86	SEABED	-326.17	-42.39	0.00	428.12	6.044	0.000	113.81	0.00	0.0041	0.0000	0.0056	0.00
87	SEABED	-332.22	-42.39	0.00	434.17	6.044	0.000	113.81	0.00	0.0041	0.0000	0.0056	0.00
88	SEABED	-338.27	-42.39	0.00	440.22	6.044	0.000	113.81	0.00	0.0041	0.0000	0.0056	0.00
89	SEABED	-344.32	-42.39	0.00	446.27	6.044	0.000	113.81	0.00	0.0041	0.0000	0.0056	0.00
90	SEABED	-350.37	-42.39	0.00	452.32	6.044	0.000	113.81	0.00	0.0041	0.0000	0.0056	0.00
91	SEABED	-356.42	-42.39	0.00	458.37	6.044	0.000	113.81	0.00	0.0041	0.0000	0.0056	0.00
92	SEABED	-362.47	-42.39	0.00	464.42	6.044	0.000	113.81	0.00	0.0041	0.0000	0.0056	0.00
93	SEABED	-368.52	-42.39	0.00	470.47	6.044	0.000	113.81	0.00	0.0041	0.0000	0.0056	0.00
94	SEABED	-374.57	-42.39	0.00	476.52	6.044	0.000	113.81	0.00	0.0041	0.0000	0.0056	0.00
95	SEABED	-380.62	-42.39	0.00	482.57	6.044	0.000	113.81	0.00	0.0041	0.0000	0.0056	0.00
96	SEABED	-386.67	-42.39	0.00	488.62	6.044	0.000	113.81	0.00	0.0041	0.0000	0.0056	0.00
97	SEABED	-392.72	-42.39	0.00	494.67	6.044	0.000	113.81	0.00	0.0041	0.0000	0.0056	0.00
98	SEABED	-398.77	-42.39	0.00	500.72	6.044	0.000	113.81	0.00	0.0041	0.0000	0.0056	0.00
99	SEABED	-404.82	-42.39	0.00	506.77	6.044	0.000	113.81	0.00	0.0041	0.0000	0.0056	0.00
100	SEABED	-410.87	-42.39	0.00	512.82	0.000	0.000	113.81	0.00	0.0041	0.0000	0.0056	0.00

S T A T I C P I P E C O O R D I N A T E S, F O R C E S A N D S T R A I N S

NODE NO.	PIPE SECTION	X COORD (M)	Y COORD (M)	VERT ANGLE (DEG)	PIPE LENGTH (M)	SUPPORT REACTION (KN)	SEPARA -TION (M)	AXIAL TENSION (KN)	BENDING MOMENT (KN-M)	TENSILE STRAIN (PCT)	BENDING STRAIN (PCT)	TOTAL STRAIN (PCT)	PERCNT ALLOW (PCT)
1	LAYBARGE	96.31	6.41	1.69	0.00	0.655	0.000	0.00	0.00	0.0000	0.0000	0.0000	0.00
3	LAYBARGE	84.28	6.05	1.70	12.04	1.244	0.000	-0.04	0.00	0.0000	0.0000	0.0000	0.00
5	LAYBARGE	73.45	5.73	1.89	22.87	1.315	0.000	-0.08	0.00	0.0000	0.0000	0.0000	0.00
7	TENSIONR	60.11	5.24	2.24	36.23	1.532	0.000	104.97	0.00	0.0000	0.0000	0.0000	0.00
9	LAYBARGE	51.10	4.86	2.21	45.24	0.000	0.000	104.93	0.00	0.0000	0.0000	0.0000	0.00
10	LAYBARGE	46.45	4.70	2.05	49.89	0.833	0.000	104.92	0.00	0.0000	0.0000	0.0000	0.00
12	LAYBARGE	38.36	4.41	1.92	57.99	0.000	0.000	104.88	0.00	0.0000	0.0000	0.0000	0.00
13	LAYBARGE	35.36	4.31	2.57	60.99	3.625	0.000	104.86	0.00	0.0000	0.0000	0.0000	0.00
15	LAYBARGE	26.35	3.78	3.20	70.02	0.000	0.000	104.82	0.00	0.0000	0.0000	0.0000	0.00
16	LAYBARGE	23.33	3.62	4.15	73.04	4.907	0.000	104.78	0.00	0.0000	0.0000	0.0000	0.00
18	LAYBARGE	11.88	2.57	5.06	84.54	0.000	0.000	104.70	0.00	0.0000	0.0000	0.0000	0.00
19	LAYBARGE	8.83	2.31	4.76	87.60	0.000	0.551	104.67	0.00	0.0000	0.0000	0.0000	0.00
21	LAYBARGE	6.02	2.08	4.59	90.42	0.000	0.000	104.65	0.00	0.0000	0.0000	0.0000	0.00
22	LAYBARGE	3.02	1.84	4.30	93.43	0.000	1.223	104.62	0.00	0.0000	0.0000	0.0000	0.00
24	LAYBARGE	-7.08	1.12	3.95	103.55	0.000	0.000	104.54	0.00	0.0000	0.0000	0.0000	0.00
27	STINGER	-7.52	1.09	3.65	103.99	0.000	1.341	104.54	0.00	0.0000	0.0000	0.0000	0.00
29	STINGER	-16.60	0.53	3.23	113.09	0.000	0.487	104.48	0.00	0.0000	0.0000	0.0000	0.00
32	STINGER	-26.42	0.02	2.66	122.93	0.000	0.019	104.42	0.00	0.0000	0.0000	0.0000	0.00
34	STINGER	-37.34	-0.43	6.59	133.86	16.035	0.000	104.06	0.00	0.0000	0.0000	0.0000	0.00
36	STINGER	-40.32	-1.00	14.86	136.89	15.133	0.000	104.03	0.00	0.0000	0.0000	0.0000	0.00
38	SAGBEND	-46.82	-3.22	18.73	143.77	0.000	0.000	104.10	0.00	0.0000	0.0000	0.0000	0.00
39	SAGBEND	-52.55	-5.15	18.43	149.82	0.000	0.000	103.92	0.00	0.0000	0.0000	0.0000	0.00
40	SAGBEND	-58.30	-7.05	18.13	155.87	0.000	0.000	103.74	0.00	0.0000	0.0000	0.0000	0.00
41	SAGBEND	-64.05	-8.91	17.82	161.92	0.000	0.000	103.56	0.00	0.0000	0.0000	0.0000	0.00
42	SAGBEND	-69.82	-10.75	17.52	167.97	0.000	0.000	103.39	0.00	0.0000	0.0000	0.0000	0.00
43	SAGBEND	-75.59	-12.56	17.22	174.02	0.000	0.000	103.22	0.00	0.0000	0.0000	0.0000	0.00
44	SAGBEND	-81.37	-14.33	16.92	180.07	0.000	0.000	103.05	0.00	0.0000	0.0000	0.0000	0.00
45	SAGBEND	-87.17	-16.08	16.61	186.12	0.000	0.000	102.89	0.00	0.0000	0.0000	0.0000	0.00
46	SAGBEND	-92.97	-17.79	16.31	192.17	0.000	0.000	102.72	0.00	0.0000	0.0000	0.0000	0.00
47	SAGBEND	-98.78	-19.47	16.00	198.22	0.000	0.000	102.56	0.00	0.0000	0.0000	0.0000	0.00
48	SAGBEND	-104.60	-21.13	15.69	204.27	0.000	0.000	102.41	0.00	0.0000	0.0000	0.0000	0.00
49	SAGBEND	-110.43	-22.75	15.38	210.32	0.000	0.000	102.25	0.00	0.0000	0.0000	0.0000	0.00
50	SAGBEND	-116.27	-24.34	15.07	216.37	0.000	0.000	102.10	0.00	0.0000	0.0000	0.0000	0.00
51	SAGBEND	-122.11	-25.89	14.76	222.42	0.000	0.000	101.96	0.00	0.0000	0.0000	0.0000	0.00
52	SAGBEND	-127.97	-27.42	14.45	228.47	0.000	0.000	101.81	0.00	0.0000	0.0000	0.0000	0.00
53	SAGBEND	-133.83	-28.91	14.14	234.52	0.000	0.000	101.67	0.00	0.0000	0.0000	0.0000	0.00
54	SAGBEND	-139.70	-30.38	13.83	240.57	0.000	0.000	101.53	0.00	0.0000	0.0000	0.0000	0.00

55	SAGBEND	-145.58	-31.81	13.51	246.62	0.000	0.000	101.40	0.00	0.0000	0.0000	0.0000	0.00
56	SAGBEND	-151.46	-33.20	13.20	252.67	0.000	0.000	101.27	0.00	0.0000	0.0000	0.0000	0.00
57	SAGBEND	-157.36	-34.57	12.88	258.72	0.000	0.000	101.14	0.00	0.0000	0.0000	0.0000	0.00
58	SAGBEND	-163.26	-35.90	12.57	264.77	0.000	0.000	101.01	0.00	0.0000	0.0000	0.0000	0.00
59	SAGBEND	-169.17	-37.20	12.25	270.82	0.000	0.000	100.89	0.00	0.0000	0.0000	0.0000	0.00
60	SAGBEND	-175.08	-38.47	11.93	276.86	0.000	0.000	100.77	0.00	0.0000	0.0000	0.0000	0.00

S T A T I C P I P E C O O R D I N A T E S, F O R C E S A N D S T R A I N S

NODE NO.	PIPE SECTION	X COORD (M)	Y COORD (M)	VERT ANGLE (DEG)	PIPE LENGTH (M)	SUPPORT REACTION (KN)	SEPARA -TION (M)	AXIAL TENSION (KN)	BENDING MOMENT (KN-M)	TENSILE STRAIN (PCT)	BENDING STRAIN (PCT)	TOTAL STRAIN (PCT)	PERCNT ALLOW (PCT)
61	SAGBEND	-181.01	-39.70	11.61	282.91	0.000	0.000	100.65	0.00	0.0000	0.0000	0.0000	0.00
62	SAGBEND	-184.48	-40.41	11.43	286.46	0.000	0.000	100.58	0.00	0.0000	0.0000	0.0000	0.00
63	SAGBEND	-187.96	-41.11	4.62	290.01	0.000	0.000	99.85	0.00	0.0035	0.0000	0.0050	0.00
64	SAGBEND	-192.95	-41.50	4.30	295.02	0.000	0.000	99.41	46.50	0.0035	0.0348	0.0394	0.00
65	SAGBEND	-198.99	-41.91	3.31	301.07	0.000	0.000	98.92	76.36	0.0035	0.0571	0.0617	0.00
66	SAGBEND	-205.03	-42.19	2.06	307.12	0.000	0.000	98.62	81.76	0.0034	0.0611	0.0657	0.00
67	SAGBEND	-211.08	-42.35	0.90	313.17	1.477	0.000	98.52	63.51	0.0034	0.0475	0.0521	0.00
68	SEABED	-217.13	-42.40	0.18	319.22	7.400	0.000	98.57	28.47	0.0034	0.0213	0.0259	0.00
69	SEABED	-223.18	-42.40	-0.06	325.27	8.416	0.000	98.59	5.62	0.0034	0.0042	0.0089	0.00
70	SEABED	-229.23	-42.39	-0.07	331.32	7.265	0.000	98.59	-1.94	0.0034	-0.0015	0.0063	0.00
71	SEABED	-235.28	-42.39	-0.03	337.37	6.352	0.000	98.59	-2.29	0.0034	-0.0017	0.0065	0.00
72	SEABED	-241.33	-42.39	-0.01	343.42	6.002	0.000	98.59	-1.06	0.0034	-0.0008	0.0057	0.00
73	SEABED	-247.38	-42.39	0.00	349.47	5.959	0.000	98.59	-0.22	0.0034	-0.0002	0.0051	0.00
74	SEABED	-253.43	-42.39	0.00	355.52	5.999	0.000	98.59	0.06	0.0034	0.0000	0.0050	0.00
75	SEABED	-259.48	-42.39	0.00	361.57	6.032	0.000	98.59	0.08	0.0034	0.0001	0.0050	0.00
76	SEABED	-265.53	-42.39	0.00	367.62	6.045	0.000	98.59	0.04	0.0034	0.0000	0.0049	0.00
77	SEABED	-271.58	-42.39	0.00	373.67	6.047	0.000	98.59	0.01	0.0034	0.0000	0.0049	0.00
78	SEABED	-277.63	-42.39	0.00	379.72	6.045	0.000	98.59	0.00	0.0034	0.0000	0.0049	0.00
79	SEABED	-283.68	-42.39	0.00	385.77	6.044	0.000	98.59	0.00	0.0034	0.0000	0.0049	0.00
80	SEABED	-289.73	-42.39	0.00	391.82	6.044	0.000	98.59	0.00	0.0034	0.0000	0.0049	0.00
81	SEABED	-295.78	-42.39	0.00	397.87	6.044	0.000	98.59	0.00	0.0034	0.0000	0.0049	0.00
82	SEABED	-301.83	-42.39	0.00	403.92	6.044	0.000	98.59	0.00	0.0034	0.0000	0.0049	0.00
83	SEABED	-307.88	-42.39	0.00	409.97	6.044	0.000	98.59	0.00	0.0034	0.0000	0.0049	0.00
84	SEABED	-313.93	-42.39	0.00	416.02	6.044	0.000	98.59	0.00	0.0034	0.0000	0.0049	0.00
85	SEABED	-319.98	-42.39	0.00	422.07	6.044	0.000	98.59	0.00	0.0034	0.0000	0.0049	0.00
86	SEABED	-326.03	-42.39	0.00	428.12	6.044	0.000	98.59	0.00	0.0034	0.0000	0.0049	0.00
87	SEABED	-332.08	-42.39	0.00	434.17	6.044	0.000	98.59	0.00	0.0034	0.0000	0.0049	0.00
88	SEABED	-338.13	-42.39	0.00	440.22	6.044	0.000	98.59	0.00	0.0034	0.0000	0.0049	0.00
89	SEABED	-344.18	-42.39	0.00	446.27	6.044	0.000	98.59	0.00	0.0034	0.0000	0.0049	0.00
90	SEABED	-350.23	-42.39	0.00	452.32	6.044	0.000	98.59	0.00	0.0034	0.0000	0.0049	0.00
91	SEABED	-356.28	-42.39	0.00	458.37	6.044	0.000	98.59	0.00	0.0034	0.0000	0.0049	0.00
92	SEABED	-362.33	-42.39	0.00	464.42	6.044	0.000	98.59	0.00	0.0034	0.0000	0.0049	0.00
93	SEABED	-368.38	-42.39	0.00	470.47	6.044	0.000	98.59	0.00	0.0034	0.0000	0.0049	0.00
94	SEABED	-374.43	-42.39	0.00	476.52	6.044	0.000	98.59	0.00	0.0034	0.0000	0.0049	0.00
95	SEABED	-380.48	-42.39	0.00	482.57	6.044	0.000	98.59	0.00	0.0034	0.0000	0.0049	0.00
96	SEABED	-386.53	-42.39	0.00	488.62	6.044	0.000	98.59	0.00	0.0034	0.0000	0.0049	0.00
97	SEABED	-392.58	-42.39	0.00	494.67	0.000	0.000	98.59	0.00	0.0034	0.0000	0.0049	0.00

S T A T I C P I P E C O O R D I N A T E S, F O R C E S A N D S T R A I N S

NODE NO.	PIPE SECTION	X COORD (M)	Y COORD (M)	VERT ANGLE (DEG)	PIPE LENGTH (M)	SUPPORT REACTION (KN)	SEPARA -TION (M)	AXIAL TENSION (KN)	BENDING MOMENT (KN-M)	TENSILE STRAIN (PCT)	BENDING STRAIN (PCT)	TOTAL STRAIN (PCT)	PERCNT ALLOW (PCT)
1	LAYBARGE	96.31	6.41	1.69	0.00	0.655	0.000	0.00	0.00	0.0000	0.0000	0.0000	0.00
3	LAYBARGE	84.28	6.05	1.70	12.04	1.244	0.000	-0.04	0.00	0.0000	0.0000	0.0000	0.00
5	LAYBARGE	73.45	5.73	1.89	22.87	1.315	0.000	-0.08	0.00	0.0000	0.0000	0.0000	0.00
7	TENSIONR	60.11	5.24	2.24	36.23	1.532	0.000	104.97	0.00	0.0000	0.0000	0.0000	0.00
9	LAYBARGE	51.10	4.86	2.21	45.24	0.000	0.000	104.93	0.00	0.0000	0.0000	0.0000	0.00
10	LAYBARGE	46.45	4.70	2.05	49.89	0.833	0.000	104.92	0.00	0.0000	0.0000	0.0000	0.00
12	LAYBARGE	38.36	4.41	1.92	57.99	0.000	0.000	104.88	0.00	0.0000	0.0000	0.0000	0.00
13	LAYBARGE	35.36	4.31	2.57	60.99	3.625	0.000	104.86	0.00	0.0000	0.0000	0.0000	0.00
15	LAYBARGE	26.35	3.78	3.20	70.02	0.000	0.000	104.82	0.00	0.0000	0.0000	0.0000	0.00
16	LAYBARGE	23.33	3.62	4.15	73.04	4.898	0.000	104.78	0.00	0.0000	0.0000	0.0000	0.00
18	LAYBARGE	11.88	2.57	5.06	84.54	0.000	0.000	104.70	0.00	0.0000	0.0000	0.0000	0.00
19	LAYBARGE	8.83	2.31	4.75	87.60	0.000	0.552	104.67	0.00	0.0000	0.0000	0.0000	0.00
21	LAYBARGE	6.02	2.08	4.58	90.42	0.000	0.000	104.65	0.00	0.0000	0.0000	0.0000	0.00
22	LAYBARGE	3.02	1.84	4.30	93.43	0.000	1.225	104.62	0.00	0.0000	0.0000	0.0000	0.00
24	LAYBARGE	-7.08	1.12	3.95	103.55	0.000	0.000	104.54	0.00	0.0000	0.0000	0.0000	0.00
27	STINGER	-7.52	1.09	3.65	103.99	0.000	1.344	104.54	0.00	0.0000	0.0000	0.0000	0.00
29	STINGER	-16.60	0.53	3.22	113.09	0.000	0.492	104.48	0.00	0.0000	0.0000	0.0000	0.00
32	STINGER	-26.43	0.03	2.65	122.94	0.000	0.022	104.42	0.00	0.0000	0.0000	0.0000	0.00
34	STINGER	-37.35	-0.42	6.59	133.87	16.058	0.000	104.06	0.00	0.0000	0.0000	0.0000	0.00
36	STINGER	-40.33	-0.99	14.57	136.90	14.089	0.000	104.07	0.00	0.0000	0.0000	0.0000	0.00
38	SAGBEND	-46.84	-3.15	18.16	143.76	0.000	0.000	104.11	0.00	0.0000	0.0000	0.0000	0.00
39	SAGBEND	-52.59	-5.02	17.85	149.81	0.000	0.000	103.93	0.00	0.0000	0.0000	0.0000	0.00
40	SAGBEND	-58.36	-6.86	17.55	155.86	0.000	0.000	103.76	0.00	0.0000	0.0000	0.0000	0.00
41	SAGBEND	-64.13	-8.67	17.25	161.91	0.000	0.000	103.58	0.00	0.0000	0.0000	0.0000	0.00
42	SAGBEND	-69.91	-10.45	16.95	167.96	0.000	0.000	103.42	0.00	0.0000	0.0000	0.0000	0.00
43	SAGBEND	-75.70	-12.20	16.65	174.01	0.000	0.000	103.25	0.00	0.0000	0.0000	0.0000	0.00
44	SAGBEND	-81.51	-13.91	16.34	180.06	0.000	0.000	103.09	0.00	0.0000	0.0000	0.0000	0.00
45	SAGBEND	-87.32	-15.60	16.04	186.11	0.000	0.000	102.93	0.00	0.0000	0.0000	0.0000	0.00
46	SAGBEND	-93.13	-17.26	15.73	192.16	0.000	0.000	102.77	0.00	0.0000	0.0000	0.0000	0.00
47	SAGBEND	-98.96	-18.88	15.42	198.21	0.000	0.000	102.62	0.00	0.0000	0.0000	0.0000	0.00
48	SAGBEND	-104.80	-20.47	15.11	204.26	0.000	0.000	102.47	0.00	0.0000	0.0000	0.0000	0.00
49	SAGBEND	-110.64	-22.04	14.81	210.31	0.000	0.000	102.32	0.00	0.0000	0.0000	0.0000	0.00
50	SAGBEND	-116.50	-23.57	14.50	216.36	0.000	0.000	102.18	0.00	0.0000	0.0000	0.0000	0.00
51	SAGBEND	-122.36	-25.06	14.18	222.41	0.000	0.000	102.03	0.00	0.0000	0.0000	0.0000	0.00
52	SAGBEND	-128.23	-26.53	13.87	228.46	0.000	0.000	101.90	0.00	0.0000	0.0000	0.0000	0.00
53	SAGBEND	-134.11	-27.97	13.56	234.51	0.000	0.000	101.76	0.00	0.0000	0.0000	0.0000	0.00
54	SAGBEND	-139.99	-29.37	13.25	240.56	0.000	0.000	101.63	0.00	0.0000	0.0000	0.0000	0.00
55	SAGBEND	-145.88	-30.74	12.93	246.61	0.000	0.000	101.50	0.00	0.0000	0.0000	0.0000	0.00
56	SAGBEND	-151.78	-32.08	12.62	252.66	0.000	0.000	101.37	0.00	0.0000	0.0000	0.0000	0.00
57	SAGBEND	-157.69	-33.38	12.30	258.71	0.000	0.000	101.25	0.00	0.0000	0.0000	0.0000	0.00
58	SAGBEND	-163.61	-34.65	11.98	264.76	0.000	0.000	101.13	0.00	0.0000	0.0000	0.0000	0.00
59	SAGBEND	-169.53	-35.89	11.67	270.81	0.000	0.000	101.01	0.00	0.0000	0.0000	0.0000	0.00
60	SAGBEND	-175.46	-37.10	11.35	276.86	0.000	0.000	100.90	0.00	0.0000	0.0000	0.0000	0.00

S T A T I C P I P E C O O R D I N A T E S, F O R C E S A N D S T R A I N S

NODE NO.	PIPE SECTION	X COORD (M)	Y COORD (M)	VERT ANGLE (DEG)	PIPE LENGTH (M)	SUPPORT REACTION (KN)	SEPARA -TION (M)	AXIAL TENSION (KN)	BENDING MOMENT (KN-M)	TENSILE STRAIN (PCT)	BENDING STRAIN (PCT)	TOTAL STRAIN (PCT)	PERCNT ALLOW (PCT)
61	SAGBEND	-181.39	-38.27	11.03	282.91	0.000	0.000	100.79	0.00	0.0000	0.0000	0.0000	0.00
62	SAGBEND	-187.33	-39.42	10.71	288.96	0.000	0.000	100.68	0.00	0.0000	0.0000	0.0000	0.00
63	SAGBEND	-193.28	-40.52	10.39	295.01	0.000	0.000	100.57	0.00	0.0000	0.0000	0.0000	0.00
64	SAGBEND	-198.19	-41.41	3.80	300.01	0.000	0.000	99.88	0.00	0.0035	0.0000	0.0050	0.00
65	SAGBEND	-201.74	-41.65	3.64	303.57	0.000	0.000	99.62	33.36	0.0035	0.0250	0.0296	0.00
66	SAGBEND	-205.29	-41.86	3.23	307.12	0.000	0.000	99.36	55.97	0.0035	0.0419	0.0465	0.00
67	SAGBEND	-211.33	-42.15	2.20	313.17	0.000	0.000	99.02	73.03	0.0035	0.0546	0.0592	0.00
68	SAGBEND	-217.38	-42.32	1.09	319.22	0.528	0.000	98.88	65.06	0.0034	0.0487	0.0532	0.00
69	SEABED	-223.43	-42.39	0.30	325.27	6.003	0.000	98.90	34.83	0.0034	0.0260	0.0307	0.00
70	SEABED	-229.48	-42.40	-0.02	331.32	8.328	0.000	98.93	9.37	0.0034	0.0070	0.0117	0.00
71	SEABED	-235.53	-42.39	-0.07	337.37	7.482	0.000	98.92	-0.81	0.0034	-0.0006	0.0055	0.00
72	SEABED	-241.58	-42.39	-0.04	343.42	6.505	0.000	98.92	-2.30	0.0034	-0.0017	0.0066	0.00
73	SEABED	-247.63	-42.39	-0.01	349.47	6.056	0.000	98.92	-1.28	0.0034	-0.0010	0.0058	0.00
74	SEABED	-253.68	-42.39	0.00	355.52	5.963	0.000	98.92	-0.36	0.0034	-0.0003	0.0052	0.00
75	SEABED	-259.73	-42.39	0.00	361.57	5.991	0.000	98.92	0.02	0.0034	0.0000	0.0049	0.00
76	SEABED	-265.78	-42.39	0.00	367.62	6.026	0.000	98.92	0.08	0.0034	0.0001	0.0050	0.00
77	SEABED	-271.83	-42.39	0.00	373.67	6.043	0.000	98.92	0.05	0.0034	0.0000	0.0050	0.00
78	SEABED	-277.88	-42.39	0.00	379.72	6.046	0.000	98.92	0.01	0.0034	0.0000	0.0049	0.00
79	SEABED	-283.93	-42.39	0.00	385.77	6.046	0.000	98.92	0.00	0.0034	0.0000	0.0049	0.00
80	SEABED	-289.98	-42.39	0.00	391.82	6.044	0.000	98.92	0.00	0.0034	0.0000	0.0049	0.00
81	SEABED	-296.03	-42.39	0.00	397.87	6.044	0.000	98.92	0.00	0.0034	0.0000	0.0049	0.00
82	SEABED	-302.08	-42.39	0.00	403.92	6.044	0.000	98.92	0.00	0.0034	0.0000	0.0049	0.00
83	SEABED	-308.13	-42.39	0.00	409.97	6.044	0.000	98.92	0.00	0.0034	0.0000	0.0049	0.00
84	SEABED	-314.18	-42.39	0.00	416.02	6.044	0.000	98.92	0.00	0.0034	0.0000	0.0049	0.00
85	SEABED	-320.23	-42.39	0.00	422.07	6.044	0.000	98.92	0.00	0.0034	0.0000	0.0049	0.00
86	SEABED	-326.28	-42.39	0.00	428.12	6.044	0.000	98.92	0.00	0.0034	0.0000	0.0049	0.00
87	SEABED	-332.33	-42.39	0.00	434.17	6.044	0.000	98.92	0.00	0.0034	0.0000	0.0049	0.00
88	SEABED	-338.38	-42.39	0.00	440.22	6.044	0.000	98.92	0.00	0.0034	0.0000	0.0049	0.00
89	SEABED	-344.43	-42.39	0.00	446.27	6.044	0.000	98.92	0.00	0.0034	0.0000	0.0049	0.00
90	SEABED	-350.48	-42.39	0.00	452.32	6.044	0.000	98.92	0.00	0.0034	0.0000	0.0049	0.00
91	SEABED	-356.53	-42.39	0.00	458.37	6.044	0.000	98.92	0.00	0.0034	0.0000	0.0049	0.00
92	SEABED	-362.58	-42.39	0.00	464.42	6.044	0.000	98.92	0.00	0.0034	0.0000	0.0049	0.00
93	SEABED	-368.63	-42.39	0.00	470.47	6.044	0.000	98.92	0.00	0.0034	0.0000	0.0049	0.00
94	SEABED	-374.68	-42.39	0.00	476.52	6.044	0.000	98.92	0.00	0.0034	0.0000	0.0049	0.00
95	SEABED	-380.73	-42.39	0.00	482.57	6.044	0.000	98.92	0.00	0.0034	0.0000	0.0049	0.00
96	SEABED	-386.78	-42.39	0.00	488.62	6.044	0.000	98.92	0.00	0.0034	0.0000	0.0049	0.00
97	SEABED	-392.83	-42.39	0.00	494.67	0.000	0.000	98.92	0.00	0.0034	0.0000	0.0049	0.00

LAYDOWN STRESS HEADING 135°

S T A T I C P I P E C O O R D I N A T E S, F O R C E S A N D S T R E S S E S

NODE NO.	PIPE SECTION	X COORD (M)	Y COORD (M)	VERT ANGLE (DEG)	PIPE LENGTH (M)	SUPPORT REACTION (KN)	SEPARA -TION (M)	AXIAL TENSION (KN)	BENDING MOMENT (KN-M)	TENSILE STRESS (MPA)	BENDING STRESS (MPA)	TOTAL STRESS (MPA)	PERCNT YIELD (PCT)
1	LAYBARGE	96.31	6.41	1.69	0.00	0.655	0.000	0.00	0.00	0.00	0.00	0.00	0.00
3	LAYBARGE	84.28	6.05	1.70	12.04	1.244	0.000	-0.04	0.00	0.00	0.00	0.00	0.00
5	LAYBARGE	73.45	5.73	1.89	22.87	1.315	0.000	-0.08	0.00	0.00	0.00	0.00	0.00
7	TENSIONR	60.11	5.24	2.15	36.23	1.619	0.000	275.87	0.00	0.00	0.00	0.00	0.00
9	LAYBARGE	51.10	4.89	2.16	45.24	0.000	0.000	275.84	0.00	0.00	0.00	0.00	0.00
10	LAYBARGE	46.45	4.72	2.01	49.89	0.000	0.022	275.82	0.00	0.00	0.00	0.00	0.00
12	LAYBARGE	38.36	4.45	2.55	57.99	0.000	0.000	275.77	0.00	26.55	0.00	26.55	7.38
13	LAYBARGE	35.36	4.31	2.62	60.99	10.653	0.000	275.49	-11.60	26.53	-17.95	44.48	12.35
15	LAYBARGE	26.34	3.84	3.70	70.02	0.000	0.000	274.29	-108.81	26.41	-168.45	194.86	54.13
16	LAYBARGE	23.33	3.62	4.84	73.04	59.346	0.000	273.28	-176.49	26.31	-273.24	299.55	83.21
18	LAYBARGE	11.90	2.25	8.63	84.56	0.000	0.000	270.89	-142.23	26.08	-220.20	246.28	68.41
19	LAYBARGE	8.89	1.76	9.97	87.60	60.919	0.000	269.40	-190.68	25.94	-295.20	321.14	89.20
21	LAYBARGE	6.12	1.24	11.17	90.42	0.000	0.000	268.94	-130.59	25.90	-202.17	228.06	63.35
22	LAYBARGE	3.12	0.62	11.98	93.49	0.910	0.000	267.94	-79.00	25.80	-122.31	148.11	41.14
24	LAYBARGE	-6.80	-1.60	13.17	103.66	0.000	0.000	265.19	-43.57	25.44	-67.45	92.98	25.83
27	STINGER	-7.58	-1.79	13.26	104.45	0.000	0.032	265.00	-48.27	25.41	-74.72	100.23	27.84
29	STINGER	-16.44	-4.03	15.67	113.60	44.709	0.000	262.02	-187.08	25.00	-289.63	314.85	87.46
32	STINGER	-25.88	-7.02	19.28	123.50	17.678	0.000	259.39	-139.19	24.58	-215.49	240.44	66.79
34	STINGER	-36.08	-10.94	22.96	134.43	43.555	0.000	255.24	-171.32	23.96	-265.24	289.79	80.50
36	STINGER	-38.84	-12.15	24.01	137.44	0.000	0.321	254.47	-102.45	23.81	-158.61	183.08	50.86
38	SAGBEND	-44.74	-14.84	24.86	143.92	0.000	0.000	252.01	-10.95	23.42	-16.96	41.21	11.45
39	SAGBEND	-50.23	-17.38	24.65	149.97	0.000	0.000	249.45	33.33	23.03	51.60	75.59	21.00
40	SAGBEND	-55.74	-19.87	23.93	156.02	0.000	0.000	246.91	57.29	22.65	88.70	112.44	31.23
41	SAGBEND	-61.29	-22.28	22.93	162.07	0.000	0.000	244.47	70.64	22.28	109.36	132.86	36.91
42	SAGBEND	-66.89	-24.58	21.77	168.12	0.000	0.000	242.15	78.41	21.92	121.39	144.66	40.18
43	SAGBEND	-72.53	-26.76	20.51	174.17	0.000	0.000	239.95	83.22	21.59	128.84	151.89	42.19
44	SAGBEND	-78.22	-28.82	19.19	180.22	0.000	0.000	237.88	86.44	21.27	133.82	156.67	43.52
45	SAGBEND	-83.95	-30.74	17.83	186.27	0.000	0.000	235.96	88.78	20.98	137.44	160.10	44.47
46	SAGBEND	-89.74	-32.52	16.44	192.32	0.000	0.000	234.17	90.60	20.70	140.26	162.75	45.21
47	SAGBEND	-95.56	-34.16	15.03	198.37	0.000	0.000	232.52	92.09	20.45	142.57	164.90	45.81
48	SAGBEND	-101.42	-35.66	13.59	204.42	0.000	0.000	231.02	93.34	20.22	144.51	166.69	46.30
49	SAGBEND	-107.32	-37.00	12.13	210.47	0.000	0.000	229.67	94.36	20.02	146.08	168.14	46.70
50	SAGBEND	-113.25	-38.20	10.66	216.52	0.000	0.000	228.48	95.12	19.84	147.27	169.20	47.00
51	SAGBEND	-119.21	-39.24	9.18	222.57	0.000	0.000	227.43	95.54	19.68	147.91	169.75	47.15
52	SAGBEND	-125.19	-40.13	7.70	228.62	0.000	0.000	226.55	95.44	19.54	147.76	169.51	47.09
53	SAGBEND	-131.20	-40.86	6.23	234.67	0.000	0.000	225.82	94.50	19.43	146.31	167.98	46.66
54	SAGBEND	-137.22	-41.44	4.78	240.72	0.000	0.000	225.25	92.13	19.34	142.63	164.25	45.63
55	SAGBEND	-143.25	-41.87	3.38	246.77	0.000	0.000	224.84	87.23	19.28	135.05	156.63	43.51
56	SAGBEND	-149.30	-42.16	2.09	252.82	0.000	0.000	224.59	77.82	19.24	120.48	142.05	39.46
57	SAGBEND	-155.35	-42.32	1.01	258.87	0.415	0.000	224.48	60.27	19.22	93.30	114.87	31.91
58	SEABED	-161.40	-42.39	0.29	264.92	5.298	0.000	224.49	31.19	19.21	48.29	69.90	19.42
59	SEABED	-167.45	-42.40	0.00	270.97	7.725	0.000	224.51	8.75	19.22	13.54	35.27	9.80

S T A T I C P I P E C O O R D I N A T E S, F O R C E S A N D S T R E S S E S

NODE NO.	PIPE SECTION	X COORD (M)	Y COORD (M)	VERT ANGLE (DEG)	PIPE LENGTH (M)	SUPPORT REACTION (KN)	SEPARA -TION (M)	AXIAL TENSION (KN)	BENDING MOMENT (KN-M)	TENSILE STRESS (MPA)	BENDING STRESS (MPA)	TOTAL STRESS (MPA)	PERCNT YIELD (PCT)
60	SEABED	-173.50	-42.39	-0.05	277.02	7.235	0.000	224.51	-0.14	19.22	-0.22	22.09	6.14
61	SEABED	-179.55	-42.39	-0.03	283.07	6.486	0.000	224.51	-1.66	19.22	-2.58	24.41	6.78
62	SEABED	-185.60	-42.39	-0.01	289.12	6.106	0.000	224.51	-1.01	19.22	-1.57	23.42	6.50
63	SEABED	-191.65	-42.39	0.00	295.17	6.003	0.000	224.51	-0.33	19.22	-0.52	22.38	6.22
64	SEABED	-197.70	-42.39	0.00	301.22	6.007	0.000	224.51	-0.03	19.22	-0.04	21.91	6.09
65	SEABED	-203.75	-42.39	0.00	307.27	6.028	0.000	224.51	0.04	19.22	0.07	21.94	6.09
66	SEABED	-209.80	-42.39	0.00	313.32	6.040	0.000	224.51	0.03	19.22	0.05	21.92	6.09
67	SEABED	-215.85	-42.39	0.00	319.37	6.044	0.000	224.51	0.01	19.22	0.02	21.89	6.08
68	SEABED	-221.90	-42.39	0.00	325.42	6.044	0.000	224.51	0.00	19.22	0.00	21.87	6.08
69	SEABED	-227.95	-42.39	0.00	331.47	6.044	0.000	224.51	0.00	19.22	0.00	21.87	6.08
70	SEABED	-234.00	-42.39	0.00	337.52	6.043	0.000	224.51	0.00	19.22	0.00	21.87	6.08
71	SEABED	-240.05	-42.39	0.00	343.57	6.043	0.000	224.51	0.00	19.22	0.00	21.87	6.07
72	SEABED	-246.10	-42.39	0.00	349.62	6.043	0.000	224.51	0.00	19.22	0.00	21.87	6.07
73	SEABED	-252.15	-42.39	0.00	355.67	0.000	0.000	224.51	0.00	19.22	0.00	21.87	6.07

S T A T I C P I P E C O O R D I N A T E S, F O R C E S A N D S T R E S S E S

NODE NO.	PIPE SECTION	X COORD (M)	Y COORD (M)	VERT ANGLE (DEG)	PIPE LENGTH (M)	SUPPORT REACTION (KN)	SEPARA -TION (M)	AXIAL TENSION (KN)	BENDING MOMENT (KN-M)	TENSILE STRESS (MPA)	BENDING STRESS (MPA)	TOTAL STRESS (MPA)	PERCNT YIELD (PCT)
1	LAYBARGE	96.31	6.41	1.69	0.00	0.655	0.000	0.00	0.00	0.00	0.00	0.00	0.00
3	LAYBARGE	84.28	6.05	1.70	12.04	1.244	0.000	-0.04	0.00	0.00	0.00	0.00	0.00
5	LAYBARGE	73.45	5.73	1.89	22.87	1.315	0.000	-0.08	0.00	0.00	0.00	0.00	0.00
7	TENSIONR	60.11	5.24	2.18	36.23	1.906	0.000	369.57	0.00	0.00	0.00	0.00	0.00
9	LAYBARGE	51.10	4.89	2.23	45.24	0.000	0.000	369.54	0.00	0.00	0.00	0.00	0.00
10	LAYBARGE	46.45	4.71	2.12	49.89	0.000	0.008	369.52	0.00	0.00	0.00	0.00	0.00
12	LAYBARGE	38.36	4.42	2.02	57.99	0.000	0.000	369.48	0.00	0.00	0.00	0.00	0.00
13	LAYBARGE	35.36	4.31	2.21	60.99	3.764	0.000	369.47	0.00	0.00	0.00	0.00	0.00
15	LAYBARGE	26.34	3.93	5.72	70.02	0.000	0.000	368.80	0.00	35.51	0.00	35.51	9.86
16	LAYBARGE	23.34	3.62	6.00	73.04	40.813	0.000	368.06	-64.66	35.44	-100.10	135.54	37.65
18	LAYBARGE	11.90	2.23	8.22	84.56	0.000	0.000	364.92	-146.21	35.14	-226.36	261.50	72.64
19	LAYBARGE	8.89	1.76	9.73	87.60	83.409	0.000	363.09	-224.12	34.96	-346.97	381.93	106.09
21	LAYBARGE	6.12	1.24	11.14	90.43	0.000	0.000	362.92	-150.02	34.94	-232.25	267.20	74.22
22	LAYBARGE	3.11	0.63	12.04	93.50	0.000	0.005	362.02	-84.29	34.86	-130.49	165.35	45.93
24	LAYBARGE	-6.81	-1.61	13.09	103.66	0.000	0.000	359.30	-29.26	34.50	-45.29	79.89	22.19
27	STINGER	-7.57	-1.78	13.15	104.45	0.000	0.009	359.11	-32.47	34.48	-50.27	84.85	23.57
29	STINGER	-16.45	-3.97	14.99	113.59	43.612	0.000	356.42	-154.24	34.09	-238.79	273.10	75.86
32	STINGER	-25.92	-6.77	17.76	123.47	18.045	0.000	353.89	-108.31	33.69	-167.69	201.75	56.04
34	STINGER	-36.25	-10.35	20.62	134.40	43.638	0.000	350.11	-145.77	33.12	-225.68	259.36	72.04
36	STINGER	-39.06	-11.43	21.49	137.41	0.000	0.347	349.35	-81.73	32.99	-126.53	160.14	44.48
38	SAGBEND	-45.10	-13.86	22.10	143.92	0.000	0.000	347.08	-2.97	32.63	-4.61	38.01	10.56
39	SAGBEND	-50.70	-16.13	21.86	149.97	0.000	0.000	344.79	30.65	32.29	47.46	80.63	22.40
40	SAGBEND	-56.33	-18.35	21.24	156.02	0.000	0.000	342.54	46.85	31.94	72.53	105.47	29.30
41	SAGBEND	-61.98	-20.51	20.45	162.07	0.000	0.000	340.37	54.87	31.61	84.94	117.68	32.69
42	SAGBEND	-67.67	-22.58	19.56	168.12	0.000	0.000	338.29	59.04	31.29	91.40	123.93	34.43
43	SAGBEND	-73.39	-24.56	18.62	174.17	0.000	0.000	336.31	61.39	30.99	95.04	127.38	35.38
44	SAGBEND	-79.14	-26.44	17.66	180.22	0.000	0.000	334.42	62.86	30.70	97.32	129.47	35.96
45	SAGBEND	-84.92	-28.23	16.68	186.27	0.000	0.000	332.64	63.90	30.43	98.93	130.92	36.37
46	SAGBEND	-90.73	-29.91	15.68	192.32	0.000	0.000	330.95	64.73	30.17	100.21	132.03	36.67
47	SAGBEND	-96.57	-31.50	14.67	198.37	0.000	0.000	329.37	65.43	29.93	101.30	132.96	36.93
48	SAGBEND	-102.43	-32.98	13.65	204.42	0.000	0.000	327.89	66.06	29.70	102.27	133.79	37.16
49	SAGBEND	-108.32	-34.35	12.62	210.47	0.000	0.000	326.51	66.63	29.49	103.15	134.54	37.37
50	SAGBEND	-114.24	-35.62	11.58	216.52	0.000	0.000	325.24	67.15	29.30	103.96	135.22	37.56
51	SAGBEND	-120.18	-36.78	10.54	222.57	0.000	0.000	324.08	67.62	29.12	104.69	135.84	37.73
52	SAGBEND	-126.13	-37.83	9.49	228.62	0.000	0.000	323.03	68.03	28.96	105.33	136.38	37.88
53	SAGBEND	-132.11	-38.77	8.43	234.67	0.000	0.000	322.09	68.38	28.82	105.86	136.82	38.01
54	SAGBEND	-138.10	-39.60	7.37	240.72	0.000	0.000	321.26	68.62	28.69	106.24	137.12	38.09
55	SAGBEND	-144.11	-40.32	6.30	246.77	0.000	0.000	320.54	68.71	28.58	106.37	137.18	38.11
56	SAGBEND	-150.13	-40.93	5.24	252.82	0.000	0.000	319.93	68.51	28.49	106.07	136.82	38.00
57	SAGBEND	-156.16	-41.43	4.18	258.87	0.000	0.000	319.44	67.78	28.41	104.94	135.64	37.68
58	SAGBEND	-162.20	-41.81	3.14	264.92	0.000	0.000	319.06	66.01	28.35	102.19	132.86	36.91
59	SAGBEND	-168.24	-42.09	2.14	270.97	0.000	0.000	318.79	62.13	28.31	96.19	126.83	35.23
60	SAGBEND	-174.29	-42.27	1.23	277.02	0.002	0.000	318.64	53.98	28.29	83.57	114.21	31.72

S T A T I C P I P E C O O R D I N A T E S, F O R C E S A N D S T R E S S E S

NODE NO.	PIPE SECTION	X COORD (M)	Y COORD (M)	VERT ANGLE (DEG)	PIPE LENGTH (M)	SUPPORT REACTION (KN)	SEPARA -TION (M)	AXIAL TENSION (KN)	BENDING MOMENT (KN-M)	TENSILE STRESS (MPA)	BENDING STRESS (MPA)	TOTAL STRESS (MPA)	PERCNT YIELD (PCT)
61	SEABED	-180.34	-42.36	0.51	283.07	1.997	0.000	318.58	37.12	28.28	57.47	88.12	24.48
62	SEABED	-186.39	-42.39	0.11	289.12	6.317	0.000	318.60	15.33	28.28	23.73	54.44	15.12
63	SEABED	-192.44	-42.39	-0.02	295.17	7.092	0.000	318.60	3.21	28.28	4.97	35.75	9.93
64	SEABED	-198.49	-42.39	-0.03	301.22	6.653	0.000	318.60	-0.63	28.28	-0.97	31.79	8.83
65	SEABED	-204.54	-42.39	-0.02	307.27	6.244	0.000	318.60	-0.95	28.28	-1.46	32.28	8.97
66	SEABED	-210.59	-42.39	0.00	313.32	6.064	0.000	318.60	-0.48	28.28	-0.75	31.57	8.77
67	SEABED	-216.64	-42.39	0.00	319.37	6.022	0.000	318.60	-0.14	28.28	-0.22	31.04	8.62
68	SEABED	-222.69	-42.39	0.00	325.42	6.026	0.000	318.60	0.00	28.28	-0.01	30.83	8.56
69	SEABED	-228.74	-42.39	0.00	331.47	6.036	0.000	318.60	0.02	28.28	0.03	30.85	8.57

70	SEABED	-234.79	-42.39	0.00	337.52	6.042	0.000	318.60	0.01	28.28	0.02	30.84	8.57
71	SEABED	-240.84	-42.39	0.00	343.57	6.043	0.000	318.60	0.01	28.28	0.01	30.83	8.56
72	SEABED	-246.89	-42.39	0.00	349.62	6.043	0.000	318.60	0.00	28.28	0.00	30.82	8.56
73	SEABED	-252.94	-42.39	0.00	355.67	6.043	0.000	318.60	0.00	28.28	0.00	30.82	8.56
74	SEABED	-258.99	-42.39	0.00	361.72	6.043	0.000	318.60	0.00	28.28	0.00	30.82	8.56
75	SEABED	-265.04	-42.39	0.00	367.77	6.043	0.000	318.60	0.00	28.28	0.00	30.82	8.56
76	SEABED	-271.09	-42.39	0.00	373.82	0.000	0.000	318.60	0.00	28.28	0.00	30.82	8.56

S T A T I C P I P E C O O R D I N A T E S, F O R C E S A N D S T R E S S E S

NODE NO.	PIPE SECTION	X COORD (M)	Y COORD (M)	VERT ANGLE (DEG)	PIPE LENGTH (M)	SUPPORT REACTION (KN)	SEPARA -TION (M)	AXIAL TENSION (KN)	BENDING MOMENT (KN-M)	TENSILE STRESS (MPA)	BENDING STRESS (MPA)	TOTAL STRESS (MPA)	PERCNT YIELD (PCT)
1	LAYBARGE	96.31	6.41	1.69	0.00	0.655	0.000	0.00	0.00	0.00	0.00	0.00	0.00
3	LAYBARGE	84.28	6.05	1.70	12.04	1.244	0.000	-0.04	0.00	0.00	0.00	0.00	0.00
5	LAYBARGE	73.45	5.73	1.89	22.87	1.315	0.000	-0.08	0.00	0.00	0.00	0.00	0.00
7	TENSIONR	60.11	5.24	2.18	36.23	1.906	0.000	369.57	0.00	0.00	0.00	0.00	0.00
9	LAYBARGE	51.10	4.89	2.23	45.24	0.000	0.000	369.54	0.00	0.00	0.00	0.00	0.00
10	LAYBARGE	46.45	4.71	2.12	49.89	0.000	0.008	369.52	0.00	0.00	0.00	0.00	0.00
12	LAYBARGE	38.36	4.42	2.02	57.99	0.000	0.000	369.48	0.00	0.00	0.00	0.00	0.00
13	LAYBARGE	35.36	4.31	2.64	60.99	9.350	0.000	369.45	0.00	0.00	0.00	0.00	0.00
15	LAYBARGE	26.35	3.79	3.27	70.02	0.000	0.000	369.42	0.00	0.00	0.00	0.00	0.00
16	LAYBARGE	23.33	3.62	4.89	73.04	22.395	0.000	369.24	0.00	0.00	0.00	0.00	0.00
18	LAYBARGE	11.91	2.31	10.21	84.54	0.000	0.000	368.49	0.00	35.48	0.00	35.48	9.86
19	LAYBARGE	8.89	1.76	10.53	87.61	39.389	0.000	367.23	-74.07	35.36	-114.68	150.04	41.68
21	LAYBARGE	6.12	1.23	11.10	90.43	0.000	0.000	366.19	-77.61	35.26	-120.16	155.42	43.17
22	LAYBARGE	3.11	0.62	11.77	93.50	30.196	0.000	364.88	-99.30	35.13	-153.74	188.87	52.46
24	LAYBARGE	-6.81	-1.59	13.03	103.66	0.000	0.000	362.25	-31.39	34.79	-48.60	83.48	23.19
27	STINGER	-7.57	-1.76	13.10	104.45	0.000	0.019	362.07	-34.84	34.76	-53.94	88.80	24.67
29	STINGER	-16.45	-3.94	14.92	113.59	42.418	0.000	359.40	-151.44	34.38	-234.45	269.05	74.74
32	STINGER	-25.93	-6.73	17.70	123.47	19.425	0.000	356.85	-111.55	33.98	-172.70	207.04	57.51
34	STINGER	-36.26	-10.30	20.58	134.40	43.205	0.000	353.10	-144.55	33.42	-223.78	257.76	71.60
36	STINGER	-39.07	-11.38	21.44	137.42	0.000	0.347	352.34	-80.82	33.28	-125.12	159.02	44.17
38	SAGBEND	-45.10	-13.80	22.05	143.91	0.000	0.000	350.07	-2.74	32.93	-4.25	37.94	10.54
39	SAGBEND	-50.71	-16.06	21.80	149.96	0.000	0.000	347.79	30.59	32.58	47.36	80.82	22.45
40	SAGBEND	-56.34	-18.28	21.19	156.01	0.000	0.000	345.55	46.59	32.24	72.13	105.36	29.27
41	SAGBEND	-61.99	-20.43	20.40	162.06	0.000	0.000	343.39	54.49	31.91	84.35	117.38	32.61
42	SAGBEND	-67.68	-22.50	19.52	168.11	0.000	0.000	341.31	58.58	31.59	90.70	123.52	34.31
43	SAGBEND	-73.40	-24.47	18.59	174.16	0.000	0.000	339.33	60.88	31.29	94.25	126.88	35.25
44	SAGBEND	-79.15	-26.35	17.63	180.21	0.000	0.000	337.45	62.32	31.00	96.49	128.93	35.81
45	SAGBEND	-84.93	-28.14	16.66	186.26	0.000	0.000	335.67	63.34	30.73	98.07	130.34	36.21
46	SAGBEND	-90.74	-29.82	15.67	192.31	0.000	0.000	333.98	64.15	30.47	99.32	131.43	36.51
47	SAGBEND	-96.58	-31.40	14.67	198.36	0.000	0.000	332.40	64.84	30.23	100.38	132.34	36.76
48	SAGBEND	-102.44	-32.88	13.66	204.41	0.000	0.000	330.92	65.46	30.00	101.34	133.15	36.99
49	SAGBEND	-108.34	-34.26	12.64	210.46	0.000	0.000	329.54	66.02	29.79	102.20	133.88	37.19
50	SAGBEND	-114.25	-35.53	11.61	216.51	0.000	0.000	328.27	66.53	29.60	102.99	134.55	37.38
51	SAGBEND	-120.19	-36.69	10.57	222.56	0.000	0.000	327.11	66.99	29.42	103.71	135.16	37.54
52	SAGBEND	-126.14	-37.75	9.53	228.61	0.000	0.000	326.05	67.40	29.26	104.35	135.69	37.69
53	SAGBEND	-132.12	-38.70	8.48	234.66	0.000	0.000	325.10	67.75	29.11	104.88	136.13	37.82
54	SAGBEND	-138.11	-39.53	7.43	240.71	0.000	0.000	324.27	68.00	28.98	105.28	136.45	37.90
55	SAGBEND	-144.12	-40.26	6.37	246.76	0.000	0.000	323.54	68.11	28.87	105.44	136.54	37.93
56	SAGBEND	-150.14	-40.88	5.32	252.81	0.000	0.000	322.93	67.96	28.78	105.21	136.25	37.85
57	SAGBEND	-156.16	-41.38	4.27	258.86	0.000	0.000	322.42	67.32	28.70	104.23	135.22	37.56
58	SAGBEND	-162.20	-41.78	3.24	264.91	0.000	0.000	322.03	65.74	28.64	101.78	132.74	36.87
59	SAGBEND	-168.24	-42.07	2.24	270.96	0.000	0.000	321.75	62.25	28.60	96.38	127.31	35.36
60	SAGBEND	-174.29	-42.25	1.32	277.01	0.000	0.000	321.59	54.87	28.57	84.95	115.87	32.19

S T A T I C P I P E C O O R D I N A T E S, F O R C E S A N D S T R E S S E S

NODE NO.	PIPE SECTION	X COORD (M)	Y COORD (M)	VERT ANGLE (DEG)	PIPE LENGTH (M)	SUPPORT REACTION (KN)	SEPARA -TION (M)	AXIAL TENSION (KN)	BENDING MOMENT (KN-M)	TENSILE STRESS (MPA)	BENDING STRESS (MPA)	TOTAL STRESS (MPA)	PERCNT YIELD (PCT)
61	SEABED	-180.34	-42.35	0.58	283.06	1.463	0.000	321.52	39.50	28.56	61.15	92.08	25.58
62	SEABED	-186.39	-42.39	0.14	289.11	5.997	0.000	321.53	17.39	28.56	26.92	57.90	16.08
63	SEABED	-192.44	-42.39	-0.01	295.16	7.092	0.000	321.54	4.10	28.56	6.35	37.41	10.39
64	SEABED	-198.49	-42.39	-0.03	301.21	6.708	0.000	321.54	-0.42	28.56	-0.65	31.75	8.82
65	SEABED	-204.54	-42.39	-0.02	307.26	6.279	0.000	321.54	-0.97	28.56	-1.50	32.59	9.05
66	SEABED	-210.59	-42.39	-0.01	313.31	6.077	0.000	321.54	-0.53	28.56	-0.83	31.92	8.87
67	SEABED	-216.64	-42.39	0.00	319.36	6.023	0.000	321.54	-0.17	28.56	-0.26	31.36	8.71
68	SEABED	-222.69	-42.39	0.00	325.41	6.025	0.000	321.54	-0.01	28.56	-0.02	31.12	8.65
69	SEABED	-228.74	-42.39	0.00	331.46	6.035	0.000	321.54	0.02	28.56	0.03	31.13	8.65
70	SEABED	-234.79	-42.39	0.00	337.51	6.041	0.000	321.54	0.02	28.56	0.02	31.13	8.65
71	SEABED	-240.84	-42.39	0.00	343.56	6.043	0.000	321.54	0.01	28.56	0.01	31.11	8.64
72	SEABED	-246.89	-42.39	0.00	349.61	6.043	0.000	321.54	0.00	28.56	0.00	31.10	8.64
73	SEABED	-252.94	-42.39	0.00	355.66	6.043	0.000	321.54	0.00	28.56	0.00	31.10	8.64
74	SEABED	-258.99	-42.39	0.00	361.71	6.043	0.000	321.54	0.00	28.56	0.00	31.10	8.64
75	SEABED	-265.04	-42.39	0.00	367.76	6.043	0.000	321.54	0.00	28.56	0.00	31.10	8.64
76	SEABED	-271.09	-42.39	0.00	373.81	0.000	0.000	321.54	0.00	28.56	0.00	31.10	8.64

S T A T I C P I P E C O O R D I N A T E S, F O R C E S A N D S T R E S S E S

NODE NO.	PIPE SECTION	X COORD (M)	Y COORD (M)	VERT ANGLE (DEG)	PIPE LENGTH (M)	SUPPORT REACTION (KN)	SEPARA -TION (M)	AXIAL TENSION (KN)	BENDING MOMENT (KN-M)	TENSILE STRESS (MPA)	BENDING STRESS (MPA)	TOTAL STRESS (MPA)	PERCNT YIELD (PCT)
1	LAYBARGE	96.31	6.41	1.69	0.00	0.655	0.000	0.00	0.00	0.00	0.00	0.00	0.00
3	LAYBARGE	84.28	6.05	1.70	12.04	1.244	0.000	-0.04	0.00	0.00	0.00	0.00	0.00
5	LAYBARGE	73.45	5.73	1.89	22.87	1.315	0.000	-0.08	0.00	0.00	0.00	0.00	0.00
7	TENSIONR	60.11	5.24	2.18	36.23	1.906	0.000	369.57	0.00	0.00	0.00	0.00	0.00
9	LAYBARGE	51.10	4.89	2.23	45.24	0.000	0.000	369.54	0.00	0.00	0.00	0.00	0.00
10	LAYBARGE	46.45	4.71	2.12	49.89	0.000	0.008	369.52	0.00	0.00	0.00	0.00	0.00
12	LAYBARGE	38.36	4.42	2.02	57.99	0.000	0.000	369.49	0.00	0.00	0.00	0.00	0.00
13	LAYBARGE	35.36	4.31	2.64	60.99	9.354	0.000	369.45	0.00	0.00	0.00	0.00	0.00
15	LAYBARGE	26.35	3.79	3.27	70.02	0.000	0.000	369.42	0.00	0.00	0.00	0.00	0.00
16	LAYBARGE	23.33	3.62	5.30	73.04	27.620	0.000	369.15	0.00	0.00	0.00	0.00	0.00
18	LAYBARGE	11.93	2.14	7.32	84.54	0.000	0.000	369.26	0.00	0.00	0.00	0.00	0.00
19	LAYBARGE	8.89	1.76	8.61	87.60	17.720	0.000	369.11	0.00	0.00	0.00	0.00	0.00
21	LAYBARGE	6.11	1.27	12.15	90.42	0.000	0.000	368.89	0.00	35.52	0.00	35.52	9.87
22	LAYBARGE	3.11	0.62	12.35	93.49	32.681	0.000	367.52	-54.34	35.39	-84.12	119.51	33.20
24	LAYBARGE	-6.81	-1.63	13.10	103.66	0.000	0.000	364.69	-32.26	35.02	-49.94	85.05	23.62
27	STINGER	-7.54	-1.80	13.17	104.41	4.062	0.000	364.51	-38.23	35.00	-59.19	94.28	26.19
29	STINGER	-16.41	-3.99	15.03	113.56	42.799	0.000	361.84	-151.31	34.61	-234.25	269.08	74.74
32	STINGER	-25.87	-6.79	17.71	123.42	17.112	0.000	359.32	-103.49	34.21	-160.22	194.80	54.11
34	STINGER	-36.20	-10.35	20.50	134.35	43.937	0.000	355.53	-144.86	33.65	-224.26	258.47	71.80
36	STINGER	-39.02	-11.43	21.35	137.36	0.000	0.348	354.78	-80.86	33.51	-125.19	159.32	44.26
38	SAGBEND	-45.09	-13.85	21.96	143.90	0.000	0.000	352.51	-2.43	33.16	-3.76	37.69	10.47
39	SAGBEND	-50.70	-16.11	21.71	149.95	0.000	0.000	350.23	30.61	32.81	47.39	81.08	22.52
40	SAGBEND	-56.34	-18.32	21.10	156.00	0.000	0.000	348.00	46.42	32.47	71.87	105.34	29.26
41	SAGBEND	-62.00	-20.46	20.31	162.05	0.000	0.000	345.84	54.21	32.14	83.92	117.18	32.55
42	SAGBEND	-67.68	-22.51	19.44	168.10	0.000	0.000	343.78	58.24	31.83	90.16	123.22	34.23
43	SAGBEND	-73.41	-24.48	18.52	174.15	0.000	0.000	341.81	60.49	31.52	93.65	126.52	35.14
44	SAGBEND	-79.16	-26.35	17.57	180.20	0.000	0.000	339.93	61.90	31.24	95.84	128.52	35.70
45	SAGBEND	-84.94	-28.13	16.60	186.25	0.000	0.000	338.15	62.91	30.97	97.39	129.90	36.08
46	SAGBEND	-90.75	-29.81	15.62	192.30	0.000	0.000	336.47	63.70	30.71	98.61	130.96	36.38
47	SAGBEND	-96.59	-31.39	14.62	198.35	0.000	0.000	334.90	64.37	30.47	99.66	131.86	36.63
48	SAGBEND	-102.46	-32.86	13.62	204.40	0.000	0.000	333.42	64.98	30.24	100.60	132.65	36.85
49	SAGBEND	-108.35	-34.24	12.61	210.45	0.000	0.000	332.05	65.53	30.03	101.45	133.37	37.05
50	SAGBEND	-114.27	-35.51	11.59	216.50	0.000	0.000	330.78	66.03	29.84	102.23	134.02	37.23
51	SAGBEND	-120.21	-36.67	10.56	222.55	0.000	0.000	329.62	66.49	29.66	102.93	134.62	37.39
52	SAGBEND	-126.16	-37.72	9.53	228.60	0.000	0.000	328.56	66.89	29.50	103.56	135.15	37.54
53	SAGBEND	-132.14	-38.67	8.48	234.65	0.000	0.000	327.62	67.24	29.35	104.09	135.58	37.66
54	SAGBEND	-138.13	-39.51	7.44	240.70	0.000	0.000	326.78	67.49	29.23	104.49	135.90	37.75
55	SAGBEND	-144.14	-40.24	6.39	246.75	0.000	0.000	326.05	67.61	29.11	104.66	136.00	37.78
56	SAGBEND	-150.15	-40.85	5.34	252.80	0.000	0.000	325.43	67.48	29.02	104.47	135.75	37.71
57	SAGBEND	-156.18	-41.36	4.30	258.85	0.000	0.000	324.93	66.89	28.94	103.56	134.79	37.44
58	SAGBEND	-162.22	-41.76	3.27	264.90	0.000	0.000	324.53	65.41	28.88	101.26	132.46	36.79
59	SAGBEND	-168.26	-42.06	2.28	270.95	0.000	0.000	324.25	62.11	28.84	96.16	127.33	35.37
60	SAGBEND	-174.31	-42.25	1.37	277.00	0.000	0.000	324.08	55.11	28.81	85.31	116.47	32.35

S T A T I C P I P E C O O R D I N A T E S, F O R C E S A N D S T R E S S E S

NODE NO.	PIPE SECTION	X COORD (M)	Y COORD (M)	VERT ANGLE (DEG)	PIPE LENGTH (M)	SUPPORT REACTION (KN)	SEPARA -TION (M)	AXIAL TENSION (KN)	BENDING MOMENT (KN-M)	TENSILE STRESS (MPA)	BENDING STRESS (MPA)	TOTAL STRESS (MPA)	PERCNT YIELD (PCT)
61	SAGBEND	-180.36	-42.35	0.61	283.05	1.232	0.000	324.00	40.48	28.80	62.66	93.83	26.06
62	SEABED	-186.41	-42.39	0.16	289.10	5.813	0.000	324.01	18.39	28.80	28.47	59.69	16.58

63	SEABED	-192.46	-42.39	-0.01	295.15	7.080	0.000	324.02	4.57	28.80	7.07	38.37	10.66
64	SEABED	-198.51	-42.39	-0.03	301.20	6.732	0.000	324.02	-0.30	28.80	-0.46	31.79	8.83
65	SEABED	-204.56	-42.39	-0.02	307.25	6.296	0.000	324.02	-0.97	28.80	-1.50	32.83	9.12
66	SEABED	-210.61	-42.39	-0.01	313.30	6.083	0.000	324.02	-0.56	28.80	-0.86	32.19	8.94
67	SEABED	-216.66	-42.39	0.00	319.35	6.025	0.000	324.02	-0.18	28.80	-0.28	31.62	8.78
68	SEABED	-222.71	-42.39	0.00	325.40	6.025	0.000	324.02	-0.02	28.80	-0.03	31.37	8.71
69	SEABED	-228.76	-42.39	0.00	331.45	6.035	0.000	324.02	0.02	28.80	0.03	31.37	8.71
70	SEABED	-234.81	-42.39	0.00	337.50	6.041	0.000	324.02	0.02	28.80	0.02	31.36	8.71
71	SEABED	-240.86	-42.39	0.00	343.55	6.043	0.000	324.02	0.01	28.80	0.01	31.35	8.71
72	SEABED	-246.91	-42.39	0.00	349.60	6.043	0.000	324.02	0.00	28.80	0.00	31.34	8.71
73	SEABED	-252.96	-42.39	0.00	355.65	6.043	0.000	324.02	0.00	28.80	0.00	31.34	8.71
74	SEABED	-259.01	-42.39	0.00	361.70	6.043	0.000	324.02	0.00	28.80	0.00	31.34	8.71
75	SEABED	-265.06	-42.39	0.00	367.75	6.043	0.000	324.02	0.00	28.80	0.00	31.34	8.71
76	SEABED	-271.11	-42.39	0.00	373.80	0.000	0.000	324.02	0.00	28.80	0.00	31.34	8.71

S T A T I C P I P E C O O R D I N A T E S, F O R C E S A N D S T R E S S E S

NODE NO.	PIPE SECTION	X COORD (M)	Y COORD (M)	VERT ANGLE (DEG)	PIPE LENGTH (M)	SUPPORT REACTION (KN)	SEPARA -TION (M)	AXIAL TENSION (KN)	BENDING MOMENT (KN-M)	TENSILE STRESS (MPA)	BENDING STRESS (MPA)	TOTAL STRESS (MPA)	PERCNT YIELD (PCT)
1	LAYBARGE	96.31	6.41	1.69	0.00	0.655	0.000	0.00	0.00	0.00	0.00	0.00	0.00
3	LAYBARGE	84.28	6.05	1.70	12.04	1.244	0.000	-0.04	0.00	0.00	0.00	0.00	0.00
5	LAYBARGE	73.45	5.73	1.89	22.87	1.315	0.000	-0.08	0.00	0.00	0.00	0.00	0.00
7	TENSIONR	60.11	5.24	2.18	36.23	1.890	0.000	346.97	0.00	0.00	0.00	0.00	0.00
9	LAYBARGE	51.10	4.88	2.23	45.24	0.000	0.000	346.94	0.00	0.00	0.00	0.00	0.00
10	LAYBARGE	46.45	4.71	2.11	49.89	0.000	0.006	346.92	0.00	0.00	0.00	0.00	0.00
12	LAYBARGE	38.36	4.42	2.01	57.99	0.000	0.000	346.89	0.00	0.00	0.00	0.00	0.00
13	LAYBARGE	35.36	4.31	2.64	60.99	8.904	0.000	346.85	0.00	0.00	0.00	0.00	0.00
15	LAYBARGE	26.35	3.79	3.27	70.02	0.000	0.000	346.82	0.00	0.00	0.00	0.00	0.00
16	LAYBARGE	23.33	3.62	5.30	73.04	26.017	0.000	346.57	0.00	0.00	0.00	0.00	0.00
18	LAYBARGE	11.93	2.14	7.32	84.54	0.000	0.000	346.66	0.00	0.00	0.00	0.00	0.00
19	LAYBARGE	8.89	1.76	8.58	87.60	16.329	0.000	346.52	0.00	0.00	0.00	0.00	0.00
21	LAYBARGE	6.12	1.27	12.20	90.42	0.000	0.000	346.28	0.00	33.34	0.00	33.34	9.26
22	LAYBARGE	3.11	0.62	12.40	93.49	32.065	0.000	344.90	-53.65	33.21	-83.05	116.26	32.30
24	LAYBARGE	-6.80	-1.64	13.17	103.66	0.000	0.000	342.06	-33.49	32.84	-51.84	84.77	23.55
27	STINGER	-7.54	-1.81	13.24	104.42	3.474	0.000	341.88	-39.65	32.82	-61.38	94.30	26.19
29	STINGER	-16.41	-4.02	15.20	113.56	43.637	0.000	339.14	-158.84	32.43	-245.91	278.55	77.38
32	STINGER	-25.86	-6.86	18.04	123.43	16.545	0.000	336.61	-107.98	32.02	-167.16	199.56	55.43
34	STINGER	-36.17	-10.49	20.97	134.36	44.080	0.000	332.74	-150.02	31.44	-232.26	264.27	73.41
36	STINGER	-38.97	-11.59	21.86	137.37	0.000	0.343	331.98	-85.03	31.31	-131.64	163.58	45.44
38	SAGBEND	-45.01	-14.07	22.52	143.90	0.000	0.000	329.67	-3.95	30.95	-6.11	37.84	10.51
39	SAGBEND	-50.61	-16.38	22.28	149.95	0.000	0.000	327.34	31.22	30.59	48.33	79.82	22.17
40	SAGBEND	-56.22	-18.65	21.64	156.00	0.000	0.000	325.05	48.49	30.24	75.07	106.34	29.54
41	SAGBEND	-61.85	-20.84	20.81	162.05	0.000	0.000	322.84	57.22	29.90	88.58	119.63	33.23
42	SAGBEND	-67.53	-22.94	19.89	168.10	0.000	0.000	320.72	61.85	29.58	95.75	126.59	35.16
43	SAGBEND	-73.23	-24.95	18.91	174.15	0.000	0.000	318.71	64.49	29.27	99.84	130.48	36.25
44	SAGBEND	-78.97	-26.86	17.89	180.20	0.000	0.000	316.80	66.17	28.98	102.44	132.89	36.91
45	SAGBEND	-84.75	-28.67	16.86	186.25	0.000	0.000	314.99	67.36	28.71	104.28	134.56	37.38
46	SAGBEND	-90.55	-30.37	15.80	192.30	0.000	0.000	313.29	68.30	28.44	105.73	135.85	37.74
47	SAGBEND	-96.39	-31.96	14.74	198.35	0.000	0.000	311.69	69.09	28.20	106.97	136.93	38.04
48	SAGBEND	-102.25	-33.45	13.66	204.40	0.000	0.000	310.21	69.80	27.97	108.06	137.87	38.30
49	SAGBEND	-108.15	-34.82	12.57	210.45	0.000	0.000	308.83	70.43	27.76	109.04	138.72	38.53
50	SAGBEND	-114.06	-36.08	11.48	216.50	0.000	0.000	307.57	71.01	27.57	109.93	139.49	38.75
51	SAGBEND	-120.00	-37.23	10.37	222.55	0.000	0.000	306.43	71.52	27.40	110.72	140.17	38.94
52	SAGBEND	-125.97	-38.26	9.26	228.60	0.000	0.000	305.39	71.95	27.24	111.39	140.74	39.09
53	SAGBEND	-131.95	-39.17	8.14	234.65	0.000	0.000	304.48	72.28	27.10	111.90	141.16	39.21
54	SAGBEND	-137.94	-39.97	7.02	240.70	0.000	0.000	303.68	72.45	26.98	112.17	141.35	39.26
55	SAGBEND	-143.95	-40.65	5.89	246.75	0.000	0.000	303.00	72.36	26.87	112.03	141.15	39.21
56	SAGBEND	-149.98	-41.21	4.78	252.80	0.000	0.000	302.44	71.80	26.79	111.16	140.22	38.95
57	SAGBEND	-156.01	-41.66	3.67	258.85	0.000	0.000	302.00	70.33	26.72	108.88	137.91	38.31
58	SAGBEND	-162.05	-41.99	2.60	264.90	0.000	0.000	301.68	67.09	26.67	103.87	132.86	36.91
59	SAGBEND	-168.10	-42.21	1.61	270.95	0.000	0.000	301.48	60.34	26.64	93.41	122.39	34.00
60	SAGBEND	-174.15	-42.34	0.77	277.00	0.636	0.000	301.39	46.55	26.62	72.07	101.05	28.07

S T A T I C P I P E C O O R D I N A T E S, F O R C E S A N D S T R E S S E S

NODE NO.	PIPE SECTION	X COORD (M)	Y COORD (M)	VERT ANGLE (DEG)	PIPE LENGTH (M)	SUPPORT REACTION (KN)	SEPARA -TION (M)	AXIAL TENSION (KN)	BENDING MOMENT (KN-M)	TENSILE STRESS (MPA)	BENDING STRESS (MPA)	TOTAL STRESS (MPA)	PERCNT YIELD (PCT)
61	SEABED	-180.20	-42.38	0.22	283.05	5.260	0.000	301.39	23.28	26.62	36.05	65.08	18.08
62	SEABED	-186.25	-42.39	0.01	289.10	7.173	0.000	301.40	6.52	26.62	10.09	39.20	10.89
63	SEABED	-192.30	-42.39	-0.03	295.15	6.887	0.000	301.41	0.04	26.62	0.06	29.24	8.12
64	SEABED	-198.35	-42.39	-0.02	301.20	6.376	0.000	301.40	-1.11	26.62	-1.71	30.88	8.58
65	SEABED	-204.40	-42.39	-0.01	307.25	6.105	0.000	301.40	-0.70	26.62	-1.08	30.25	8.40
66	SEABED	-210.45	-42.39	0.00	313.30	6.024	0.000	301.40	-0.25	26.62	-0.38	29.56	8.21
67	SEABED	-216.50	-42.39	0.00	319.35	6.020	0.000	301.40	-0.03	26.62	-0.05	29.23	8.12
68	SEABED	-222.55	-42.39	0.00	325.40	6.032	0.000	301.40	0.02	26.62	0.03	29.21	8.12
69	SEABED	-228.60	-42.39	0.00	331.45	6.040	0.000	301.40	0.02	26.62	0.03	29.21	8.11
70	SEABED	-234.65	-42.39	0.00	337.50	6.043	0.000	301.40	0.01	26.62	0.01	29.19	8.11
71	SEABED	-240.70	-42.39	0.00	343.55	6.044	0.000	301.40	0.00	26.62	0.00	29.18	8.11
72	SEABED	-246.75	-42.39	0.00	349.60	6.043	0.000	301.40	0.00	26.62	0.00	29.18	8.11
73	SEABED	-252.80	-42.39	0.00	355.65	6.043	0.000	301.40	0.00	26.62	0.00	29.18	8.11
74	SEABED	-258.85	-42.39	0.00	361.70	6.043	0.000	301.40	0.00	26.62	0.00	29.18	8.11
75	SEABED	-264.90	-42.39	0.00	367.75	6.043	0.000	301.40	0.00	26.62	0.00	29.18	8.11
76	SEABED	-270.95	-42.39	0.00	373.80	0.000	0.000	301.40	0.00	26.62	0.00	29.18	8.11

S T A T I C P I P E C O O R D I N A T E S, F O R C E S A N D S T R E S S E S

NODE NO.	PIPE SECTION	X COORD (M)	Y COORD (M)	VERT ANGLE (DEG)	PIPE LENGTH (M)	SUPPORT REACTION (KN)	SEPARA -TION (M)	AXIAL TENSION (KN)	BENDING MOMENT (KN-M)	TENSILE STRESS (MPA)	BENDING STRESS (MPA)	TOTAL STRESS (MPA)	PERCNT YIELD (PCT)
1	LAYBARGE	96.31	6.41	1.69	0.00	0.655	0.000	0.00	0.00	0.00	0.00	0.00	0.00
3	LAYBARGE	84.28	6.05	1.70	12.04	1.244	0.000	-0.04	0.00	0.00	0.00	0.00	0.00
5	LAYBARGE	73.45	5.73	1.89	22.87	1.315	0.000	-0.08	0.00	0.00	0.00	0.00	0.00
7	TENSIONR	60.11	5.24	2.18	36.23	1.890	0.000	346.97	0.00	0.00	0.00	0.00	0.00
9	LAYBARGE	51.10	4.88	2.23	45.24	0.000	0.000	346.93	0.00	0.00	0.00	0.00	0.00
10	LAYBARGE	46.45	4.71	2.11	49.89	0.000	0.006	346.91	0.00	0.00	0.00	0.00	0.00
12	LAYBARGE	38.36	4.42	2.01	57.99	0.000	0.000	346.88	0.00	0.00	0.00	0.00	0.00
13	LAYBARGE	35.36	4.31	2.64	60.99	8.904	0.000	346.85	0.00	0.00	0.00	0.00	0.00
15	LAYBARGE	26.35	3.79	3.27	70.02	0.000	0.000	346.82	0.00	0.00	0.00	0.00	0.00
16	LAYBARGE	23.33	3.62	5.30	73.04	26.018	0.000	346.56	0.00	0.00	0.00	0.00	0.00
18	LAYBARGE	11.93	2.14	7.32	84.54	0.000	0.000	346.66	0.00	0.00	0.00	0.00	0.00
19	LAYBARGE	8.89	1.76	9.21	87.60	23.944	0.000	346.41	0.00	0.00	0.00	0.00	0.00
21	LAYBARGE	6.13	1.21	11.13	90.42	0.000	0.000	346.56	0.00	0.00	0.00	0.00	0.00
22	LAYBARGE	3.11	0.62	11.85	93.49	9.572	0.000	346.46	0.00	0.00	0.00	0.00	0.00
24	LAYBARGE	-6.77	-1.58	13.74	103.61	0.000	0.000	346.20	0.00	33.24	0.00	33.33	9.26
27	STINGER	-7.58	-1.78	13.75	104.45	0.000	0.035	346.00	-6.56	33.21	-10.16	43.47	12.08
29	STINGER	-16.44	-4.03	15.26	113.59	43.770	0.000	343.26	-149.01	32.82	-230.69	263.73	73.26
32	STINGER	-25.90	-6.87	17.99	123.46	17.828	0.000	340.66	-108.52	32.41	-168.01	200.79	55.78
34	STINGER	-36.22	-10.49	20.89	134.41	43.679	0.000	336.81	-147.98	31.84	-229.09	261.49	72.64
36	STINGER	-39.02	-11.59	21.77	137.42	0.000	0.345	336.05	-83.60	31.70	-129.43	161.76	44.93
38	SAGBEND	-44.99	-14.02	22.41	143.86	0.000	0.000	333.78	-4.06	31.34	-6.29	38.41	10.67
39	SAGBEND	-50.58	-16.32	22.17	149.91	0.000	0.000	331.46	30.91	30.99	47.86	79.75	22.15
40	SAGBEND	-56.20	-18.58	21.54	155.96	0.000	0.000	329.18	48.01	30.64	74.33	105.99	29.44
41	SAGBEND	-61.84	-20.76	20.72	162.01	0.000	0.000	326.98	56.61	30.31	87.64	119.08	33.08
42	SAGBEND	-67.51	-22.86	19.81	168.06	0.000	0.000	324.87	61.14	29.99	94.66	125.89	34.97
43	SAGBEND	-73.22	-24.86	18.84	174.11	0.000	0.000	322.86	63.72	29.68	98.65	129.69	36.03
44	SAGBEND	-78.97	-26.76	17.84	180.16	0.000	0.000	320.96	65.35	29.39	101.17	132.03	36.68
45	SAGBEND	-84.74	-28.56	16.81	186.21	0.000	0.000	319.15	66.51	29.11	102.96	133.65	37.12
46	SAGBEND	-90.55	-30.26	15.77	192.26	0.000	0.000	317.46	67.42	28.85	104.37	134.89	37.47
47	SAGBEND	-96.39	-31.85	14.72	198.31	0.000	0.000	315.86	68.19	28.61	105.57	135.93	37.76
48	SAGBEND	-102.25	-33.34	13.66	204.36	0.000	0.000	314.38	68.88	28.38	106.63	136.85	38.01
49	SAGBEND	-108.14	-34.71	12.59	210.41	0.000	0.000	313.01	69.50	28.17	107.59	137.68	38.24
50	SAGBEND	-114.06	-35.97	11.50	216.46	0.000	0.000	311.74	70.06	27.98	108.46	138.42	38.45
51	SAGBEND	-120.00	-37.12	10.41	222.51	0.000	0.000	310.59	70.56	27.80	109.23	139.09	38.63
52	SAGBEND	-125.96	-38.16	9.32	228.56	0.000	0.000	309.56	70.99	27.64	109.90	139.65	38.79
53	SAGBEND	-131.94	-39.08	8.21	234.61	0.000	0.000	308.64	71.32	27.50	110.42	140.08	38.91
54	SAGBEND	-137.93	-39.89	7.10	240.66	0.000	0.000	307.83	71.52	27.38	110.72	140.31	38.97
55	SAGBEND	-143.95	-40.58	5.99	246.71	0.000	0.000	307.14	71.48	27.27	110.66	140.18	38.94
56	SAGBEND	-149.97	-41.15	4.89	252.76	0.000	0.000	306.57	71.02	27.19	109.96	139.42	38.73
57	SAGBEND	-156.00	-41.61	3.80	258.81	0.000	0.000	306.12	69.77	27.12	108.01	137.43	38.18
58	SAGBEND	-162.04	-41.95	2.73	264.86	0.000	0.000	305.78	66.95	27.07	103.64	133.03	36.95
59	SAGBEND	-168.09	-42.19	1.73	270.91	0.000	0.000	305.56	61.01	27.03	94.45	123.82	34.40
60	SAGBEND	-174.13	-42.32	0.87	276.96	0.310	0.000	305.46	48.80	27.01	75.56	104.93	29.15

S T A T I C P I P E C O O R D I N A T E S, F O R C E S A N D S T R E S S E S

NODE NO.	PIPE SECTION	X COORD (M)	Y COORD (M)	VERT ANGLE (DEG)	PIPE LENGTH (M)	SUPPORT REACTION (KN)	SEPARA -TION (M)	AXIAL TENSION (KN)	BENDING MOMENT (KN-M)	TENSILE STRESS (MPA)	BENDING STRESS (MPA)	TOTAL STRESS (MPA)	PERCNT YIELD (PCT)
61	SEABED	-180.18	-42.38	0.28	283.01	4.550	0.000	305.45	26.52	27.01	41.05	70.46	19.57
62	SEABED	-186.23	-42.39	0.02	289.06	7.079	0.000	305.46	8.24	27.01	12.76	42.25	11.74
63	SEABED	-192.28	-42.39	-0.03	295.11	6.957	0.000	305.47	0.57	27.01	0.88	30.44	8.46
64	SEABED	-198.33	-42.39	-0.03	301.16	6.436	0.000	305.47	-1.07	27.01	-1.66	31.21	8.67
65	SEABED	-204.38	-42.39	-0.01	307.21	6.131	0.000	305.47	-0.77	27.01	-1.19	30.75	8.54
66	SEABED	-210.43	-42.39	0.00	313.26	6.030	0.000	305.47	-0.30	27.01	-0.46	30.02	8.34
67	SEABED	-216.48	-42.39	0.00	319.31	6.020	0.000	305.47	-0.05	27.01	-0.08	29.65	8.24
68	SEABED	-222.53	-42.39	0.00	325.36	6.031	0.000	305.47	0.02	27.01	0.03	29.60	8.22
69	SEABED	-228.58	-42.39	0.00	331.41	6.039	0.000	305.47	0.02	27.01	0.03	29.60	8.22
70	SEABED	-234.63	-42.39	0.00	337.46	6.043	0.000	305.47	0.01	27.01	0.02	29.58	8.22
71	SEABED	-240.68	-42.39	0.00	343.51	6.044	0.000	305.47	0.00	27.01	0.00	29.57	8.21
72	SEABED	-246.73	-42.39	0.00	349.56	6.043	0.000	305.47	0.00	27.01	0.00	29.57	8.21
73	SEABED	-252.78	-42.39	0.00	355.61	6.043	0.000	305.47	0.00	27.01	0.00	29.57	8.21
74	SEABED	-258.83	-42.39	0.00	361.66	6.043	0.000	305.47	0.00	27.01	0.00	29.57	8.21
75	SEABED	-264.88	-42.39	0.00	367.71	6.043	0.000	305.47	0.00	27.01	0.00	29.57	8.21
76	SEABED	-270.93	-42.39	0.00	373.76	0.000	0.000	305.47	0.00	27.01	0.00	29.57	8.21

S T A T I C P I P E C O O R D I N A T E S, F O R C E S A N D S T R E S S E S

NODE NO.	PIPE SECTION	X COORD (M)	Y COORD (M)	VERT ANGLE (DEG)	PIPE LENGTH (M)	SUPPORT REACTION (KN)	SEPARA -TION (M)	AXIAL TENSION (KN)	BENDING MOMENT (KN-M)	TENSILE STRESS (MPA)	BENDING STRESS (MPA)	TOTAL STRESS (MPA)	PERCNT YIELD (PCT)
1	LAYBARGE	96.31	6.41	1.69	0.00	0.655	0.000	0.00	0.00	0.00	0.00	0.00	0.00
3	LAYBARGE	84.28	6.05	1.70	12.04	1.244	0.000	-0.04	0.00	0.00	0.00	0.00	0.00
5	LAYBARGE	73.45	5.73	1.89	22.87	1.315	0.000	-0.08	0.00	0.00	0.00	0.00	0.00
7	TENSIONR	60.11	5.24	2.19	36.23	1.872	0.000	320.67	0.00	0.00	0.00	0.00	0.00
9	LAYBARGE	51.10	4.88	2.24	45.24	0.000	0.000	320.64	0.00	0.00	0.00	0.00	0.00
10	LAYBARGE	46.45	4.71	2.11	49.89	0.000	0.004	320.62	0.00	0.00	0.00	0.00	0.00
12	LAYBARGE	38.36	4.42	2.00	57.99	0.000	0.000	320.59	0.00	0.00	0.00	0.00	0.00
13	LAYBARGE	35.36	4.31	2.63	60.99	8.380	0.000	320.55	0.00	0.00	0.00	0.00	0.00
15	LAYBARGE	26.35	3.79	3.26	70.02	0.000	0.000	320.52	0.00	0.00	0.00	0.00	0.00
16	LAYBARGE	23.33	3.62	5.30	73.04	24.145	0.000	320.28	0.00	0.00	0.00	0.00	0.00
18	LAYBARGE	11.93	2.14	7.31	84.54	0.000	0.000	320.36	0.00	0.00	0.00	0.00	0.00
19	LAYBARGE	8.91	1.76	9.20	87.58	22.181	0.000	320.13	0.00	0.00	0.00	0.00	0.00
21	LAYBARGE	6.14	1.21	11.13	90.41	0.000	0.000	320.26	0.00	0.00	0.00	0.00	0.00
22	LAYBARGE	3.12	0.62	12.76	93.48	19.197	0.000	320.06	0.00	0.00	0.00	0.00	0.00
24	LAYBARGE	-6.68	-1.90	17.10	103.60	0.000	0.000	319.59	0.00	30.66	0.00	30.77	8.55
27	STINGER	-7.54	-2.16	17.11	104.51	13.283	0.000	319.32	-14.15	30.62	-21.91	52.65	14.63
29	STINGER	-16.26	-4.91	18.21	113.65	31.333	0.000	316.35	-101.22	30.18	-156.71	187.16	51.99
32	STINGER	-25.57	-8.14	19.93	123.50	10.935	0.000	313.25	-65.23	29.70	-100.99	131.13	36.43
34	STINGER	-35.78	-12.02	21.87	134.43	35.992	0.000	309.20	-110.41	29.09	-170.94	200.68	55.74
36	STINGER	-38.57	-13.16	22.50	137.44	0.000	0.376	308.27	-57.86	28.94	-89.57	119.23	33.12
38	SAGBEND	-44.49	-15.64	22.84	143.86	0.000	0.000	305.86	8.64	28.56	13.37	42.80	11.89
39	SAGBEND	-50.08	-17.98	22.44	149.91	0.000	0.000	303.49	39.09	28.20	60.52	89.72	24.92
40	SAGBEND	-55.68	-20.25	21.71	155.96	0.000	0.000	301.19	54.57	27.85	84.49	113.45	31.51
41	SAGBEND	-61.32	-22.45	20.79	162.01	0.000	0.000	298.97	62.70	27.52	97.07	125.82	34.95
42	SAGBEND	-66.99	-24.54	19.78	168.06	0.000	0.000	296.87	67.20	27.19	104.04	132.57	36.83
43	SAGBEND	-72.71	-26.54	18.71	174.11	0.000	0.000	294.87	69.89	26.89	108.21	136.55	37.93
44	SAGBEND	-78.45	-28.42	17.62	180.16	0.000	0.000	292.98	71.68	26.60	110.96	139.13	38.65
45	SAGBEND	-84.24	-30.20	16.49	186.21	0.000	0.000	291.20	72.98	26.33	112.99	140.98	39.16
46	SAGBEND	-90.06	-31.86	15.35	192.26	0.000	0.000	289.54	74.03	26.07	114.61	142.44	39.57
47	SAGBEND	-95.90	-33.40	14.20	198.31	0.000	0.000	287.99	74.92	25.84	115.99	143.67	39.91
48	SAGBEND	-101.78	-34.83	13.03	204.36	0.000	0.000	286.57	75.71	25.62	117.21	144.74	40.21
49	SAGBEND	-107.69	-36.13	11.85	210.41	0.000	0.000	285.26	76.40	25.42	118.28	145.69	40.47
50	SAGBEND	-113.63	-37.31	10.66	216.46	0.000	0.000	284.08	77.00	25.24	119.21	146.50	40.70
51	SAGBEND	-119.58	-38.37	9.46	222.51	0.000	0.000	283.03	77.49	25.08	119.97	147.16	40.88
52	SAGBEND	-125.56	-39.30	8.26	228.56	0.000	0.000	282.09	77.83	24.94	120.50	147.60	41.00
53	SAGBEND	-131.56	-40.10	7.05	234.61	0.000	0.000	281.29	77.94	24.81	120.67	147.69	41.03
54	SAGBEND	-137.57	-40.78	5.84	240.66	0.000	0.000	280.61	77.66	24.71	120.23	147.19	40.89
55	SAGBEND	-143.59	-41.34	4.64	246.71	0.000	0.000	280.06	76.68	24.62	118.71	145.61	40.45
56	SAGBEND	-149.63	-41.76	3.47	252.76	0.000	0.000	279.64	74.37	24.56	115.14	142.01	39.45
57	SAGBEND	-155.67	-42.07	2.35	258.81	0.000	0.000	279.35	69.54	24.51	107.66	134.50	37.36
58	SAGBEND	-161.72	-42.26	1.34	264.86	0.002	0.000	279.19	59.81	24.49	92.60	119.44	33.18
59	SEABED	-167.77	-42.36	0.54	270.91	2.121	0.000	279.14	40.58	24.48	62.83	89.68	24.91

S T A T I C P I P E C O O R D I N A T E S, F O R C E S A N D S T R E S S E S

NODE NO.	PIPE SECTION	X COORD (M)	Y COORD (M)	VERT ANGLE (DEG)	PIPE LENGTH (M)	SUPPORT REACTION (KN)	SEPARA -TION (M)	AXIAL TENSION (KN)	BENDING MOMENT (KN-M)	TENSILE STRESS (MPA)	BENDING STRESS (MPA)	TOTAL STRESS (MPA)	PERCNT YIELD (PCT)
60	SEABED	-173.82	-42.39	0.11	276.96	6.613	0.000	279.16	16.40	24.48	25.39	52.31	14.53
61	SEABED	-179.87	-42.39	-0.03	283.01	7.284	0.000	279.16	3.15	24.48	4.87	31.89	8.86
62	SEABED	-185.92	-42.39	-0.04	289.06	6.720	0.000	279.16	-0.91	24.48	-1.40	28.45	7.90
63	SEABED	-191.97	-42.39	-0.02	295.11	6.249	0.000	279.16	-1.12	24.48	-1.73	28.77	7.99
64	SEABED	-198.02	-42.39	0.00	301.16	6.053	0.000	279.16	-0.54	24.48	-0.84	27.89	7.75
65	SEABED	-204.07	-42.39	0.00	307.21	6.013	0.000	279.16	-0.14	24.48	-0.22	27.28	7.58
66	SEABED	-210.12	-42.39	0.00	313.26	6.023	0.000	279.16	0.01	24.48	0.01	27.07	7.52
67	SEABED	-216.17	-42.39	0.00	319.31	6.036	0.000	279.16	0.03	24.48	0.04	27.10	7.53
68	SEABED	-222.22	-42.39	0.00	325.36	6.042	0.000	279.16	0.02	24.48	0.03	27.09	7.52
69	SEABED	-228.27	-42.39	0.00	331.41	6.044	0.000	279.16	0.01	24.48	0.01	27.07	7.52
70	SEABED	-234.32	-42.39	0.00	337.46	6.044	0.000	279.16	0.00	24.48	0.00	27.06	7.52
71	SEABED	-240.37	-42.39	0.00	343.51	6.043	0.000	279.16	0.00	24.48	0.00	27.06	7.52
72	SEABED	-246.42	-42.39	0.00	349.56	6.043	0.000	279.16	0.00	24.48	0.00	27.06	7.52
73	SEABED	-252.47	-42.39	0.00	355.61	6.043	0.000	279.16	0.00	24.48	0.00	27.06	7.52
74	SEABED	-258.52	-42.39	0.00	361.66	6.043	0.000	279.16	0.00	24.48	0.00	27.06	7.52
75	SEABED	-264.57	-42.39	0.00	367.71	0.000	0.000	279.16	0.00	24.48	0.00	27.06	7.52

S T A T I C P I P E C O O R D I N A T E S, F O R C E S A N D S T R E S S E S

NODE NO.	PIPE SECTION	X COORD (M)	Y COORD (M)	VERT ANGLE (DEG)	PIPE LENGTH (M)	SUPPORT REACTION (KN)	SEPARA -TION (M)	AXIAL TENSION (KN)	BENDING MOMENT (KN-M)	TENSILE STRESS (MPA)	BENDING STRESS (MPA)	TOTAL STRESS (MPA)	PERCNT YIELD (PCT)
1	LAYBARGE	96.31	6.41	1.69	0.00	0.655	0.000	0.00	0.00	0.00	0.00	0.00	0.00
3	LAYBARGE	84.28	6.05	1.70	12.04	1.244	0.000	-0.04	0.00	0.00	0.00	0.00	0.00
5	LAYBARGE	73.45	5.73	1.89	22.87	1.315	0.000	-0.08	0.00	0.00	0.00	0.00	0.00
7	TENSIONR	60.11	5.24	2.19	36.23	1.872	0.000	320.67	0.00	0.00	0.00	0.00	0.00
9	LAYBARGE	51.10	4.88	2.24	45.24	0.000	0.000	320.64	0.00	0.00	0.00	0.00	0.00
10	LAYBARGE	46.45	4.71	2.11	49.89	0.000	0.004	320.62	0.00	0.00	0.00	0.00	0.00
12	LAYBARGE	38.36	4.42	2.00	57.99	0.000	0.000	320.59	0.00	0.00	0.00	0.00	0.00
13	LAYBARGE	35.36	4.31	2.63	60.99	8.380	0.000	320.55	0.00	0.00	0.00	0.00	0.00
15	LAYBARGE	26.35	3.79	3.26	70.02	0.000	0.000	320.52	0.00	0.00	0.00	0.00	0.00
16	LAYBARGE	23.33	3.62	5.30	73.04	24.154	0.000	320.28	0.00	0.00	0.00	0.00	0.00
18	LAYBARGE	11.93	2.14	7.32	84.54	0.000	0.000	320.36	0.00	0.00	0.00	0.00	0.00
19	LAYBARGE	8.89	1.76	9.20	87.60	22.213	0.000	320.13	0.00	0.00	0.00	0.00	0.00
21	LAYBARGE	6.13	1.21	11.13	90.42	0.000	0.000	320.26	0.00	0.00	0.00	0.00	0.00
22	LAYBARGE	3.11	0.62	12.89	93.49	20.528	0.000	320.03	0.00	0.00	0.00	0.00	0.00
24	LAYBARGE	-6.68	-1.94	14.62	103.61	0.000	0.000	319.95	0.00	0.00	0.00	0.00	0.00
27	STINGER	-7.54	-2.17	17.24	104.50	9.521	0.000	319.58	0.00	30.65	0.00	30.77	8.55
29	STINGER	-16.26	-4.92	18.21	113.65	33.415	0.000	316.59	-103.32	30.21	-159.95	190.42	52.90
32	STINGER	-25.56	-8.15	19.93	123.49	10.189	0.000	313.52	-63.28	29.73	-97.96	128.13	35.59
34	STINGER	-35.78	-12.03	21.85	134.43	36.228	0.000	309.46	-110.77	29.12	-171.48	201.25	55.90
36	STINGER	-38.57	-13.16	22.49	137.43	0.000	0.376	308.52	-58.10	28.96	-89.95	119.63	33.23
38	SAGBEND	-44.41	-15.62	22.83	143.77	0.000	0.000	306.15	7.91	28.59	12.25	41.71	11.59
39	SAGBEND	-49.99	-17.95	22.44	149.82	0.000	0.000	303.79	38.71	28.23	59.93	89.15	24.76
40	SAGBEND	-55.60	-20.22	21.71	155.87	0.000	0.000	301.48	54.35	27.88	84.15	113.14	31.43
41	SAGBEND	-61.24	-22.42	20.79	161.92	0.000	0.000	299.27	62.56	27.55	96.85	125.62	34.89
42	SAGBEND	-66.91	-24.52	19.78	167.97	0.000	0.000	297.16	67.09	27.22	103.87	132.44	36.79
43	SAGBEND	-72.62	-26.51	18.72	174.02	0.000	0.000	295.16	69.80	26.92	108.06	136.44	37.90
44	SAGBEND	-78.37	-28.40	17.62	180.07	0.000	0.000	293.27	71.59	26.63	110.83	139.02	38.62
45	SAGBEND	-84.16	-30.17	16.50	186.12	0.000	0.000	291.49	72.90	26.36	112.86	140.88	39.13
46	SAGBEND	-89.97	-31.83	15.36	192.17	0.000	0.000	289.83	73.95	26.10	114.49	142.34	39.54
47	SAGBEND	-95.82	-33.38	14.21	198.22	0.000	0.000	288.28	74.84	25.87	115.87	143.57	39.88
48	SAGBEND	-101.70	-34.80	13.04	204.27	0.000	0.000	286.86	75.63	25.65	117.08	144.65	40.18
49	SAGBEND	-107.61	-36.11	11.86	210.32	0.000	0.000	285.55	76.32	25.45	118.15	145.59	40.44
50	SAGBEND	-113.54	-37.29	10.68	216.37	0.000	0.000	284.37	76.92	25.27	119.08	146.41	40.67
51	SAGBEND	-119.50	-38.35	9.48	222.42	0.000	0.000	283.31	77.41	25.11	119.85	147.07	40.85
52	SAGBEND	-125.48	-39.28	8.28	228.47	0.000	0.000	282.38	77.76	24.96	120.38	147.51	40.98
53	SAGBEND	-131.47	-40.09	7.07	234.52	0.000	0.000	281.57	77.87	24.84	120.56	147.61	41.00
54	SAGBEND	-137.48	-40.77	5.86	240.57	0.000	0.000	280.89	77.60	24.74	120.14	147.13	40.87
55	SAGBEND	-143.51	-41.33	4.66	246.62	0.000	0.000	280.34	76.64	24.65	118.65	145.58	40.44
56	SAGBEND	-149.54	-41.76	3.49	252.67	0.000	0.000	279.92	74.38	24.59	115.14	142.04	39.46
57	SAGBEND	-155.58	-42.07	2.37	258.72	0.000	0.000	279.62	69.62	24.54	107.79	134.66	37.41
58	SAGBEND	-161.63	-42.26	1.36	264.77	0.001	0.000	279.46	60.05	24.51	92.97	119.83	33.29
59	SEABED	-167.68	-42.36	0.56	270.82	2.015	0.000	279.40	41.10	24.50	63.62	90.50	25.14

S T A T I C P I P E C O O R D I N A T E S, F O R C E S A N D S T R E S S E S

NODE NO.	PIPE SECTION	X COORD (M)	Y COORD (M)	VERT ANGLE (DEG)	PIPE LENGTH (M)	SUPPORT REACTION (KN)	SEPARA -TION (M)	AXIAL TENSION (KN)	BENDING MOMENT (KN-M)	TENSILE STRESS (MPA)	BENDING STRESS (MPA)	TOTAL STRESS (MPA)	PERCNT YIELD (PCT)
60	SEABED	-173.73	-42.39	0.11	276.87	6.562	0.000	279.42	16.80	24.50	26.01	52.96	14.71
61	SEABED	-179.78	-42.39	-0.03	282.92	7.290	0.000	279.43	3.31	24.50	5.13	32.17	8.94
62	SEABED	-185.83	-42.39	-0.04	288.97	6.732	0.000	279.43	-0.87	24.50	-1.35	28.42	7.90
63	SEABED	-191.88	-42.39	-0.02	295.02	6.256	0.000	279.43	-1.13	24.50	-1.75	28.81	8.00
64	SEABED	-197.93	-42.39	-0.01	301.07	6.055	0.000	279.43	-0.55	24.50	-0.86	27.93	7.76
65	SEABED	-203.98	-42.39	0.00	307.12	6.014	0.000	279.43	-0.15	24.50	-0.23	27.31	7.59
66	SEABED	-210.03	-42.39	0.00	313.17	6.022	0.000	279.43	0.00	24.50	0.01	27.09	7.53
67	SEABED	-216.08	-42.39	0.00	319.22	6.035	0.000	279.43	0.03	24.50	0.04	27.13	7.54
68	SEABED	-222.13	-42.39	0.00	325.27	6.042	0.000	279.43	0.02	24.50	0.03	27.11	7.53
69	SEABED	-228.18	-42.39	0.00	331.32	6.044	0.000	279.43	0.01	24.50	0.01	27.09	7.53
70	SEABED	-234.23	-42.39	0.00	337.37	6.044	0.000	279.43	0.00	24.50	0.00	27.09	7.52
71	SEABED	-240.28	-42.39	0.00	343.42	6.043	0.000	279.43	0.00	24.50	0.00	27.09	7.52
72	SEABED	-246.33	-42.39	0.00	349.47	6.043	0.000	279.43	0.00	24.50	0.00	27.09	7.52
73	SEABED	-252.38	-42.39	0.00	355.52	6.043	0.000	279.43	0.00	24.50	0.00	27.09	7.52
74	SEABED	-258.43	-42.39	0.00	361.57	6.043	0.000	279.43	0.00	24.50	0.00	27.09	7.52
75	SEABED	-264.48	-42.39	0.00	367.62	0.000	0.000	279.43	0.00	24.50	0.00	27.09	7.52

S T A T I C P I P E C O O R D I N A T E S, F O R C E S A N D S T R E S S E S

NODE NO.	PIPE SECTION	X COORD (M)	Y COORD (M)	VERT ANGLE (DEG)	PIPE LENGTH (M)	SUPPORT REACTION (KN)	SEPARA -TION (M)	AXIAL TENSION (KN)	BENDING MOMENT (KN-M)	TENSILE STRESS (MPA)	BENDING STRESS (MPA)	TOTAL STRESS (MPA)	PERCNT YIELD (PCT)
1	LAYBARGE	96.31	6.41	1.69	0.00	0.655	0.000	0.00	0.00	0.00	0.00	0.00	0.00
3	LAYBARGE	84.28	6.05	1.70	12.04	1.244	0.000	-0.04	0.00	0.00	0.00	0.00	0.00
5	LAYBARGE	73.45	5.73	1.89	22.87	1.315	0.000	-0.08	0.00	0.00	0.00	0.00	0.00
7	TENSIONR	60.11	5.24	2.19	36.23	1.867	0.000	314.37	0.00	0.00	0.00	0.00	0.00
9	LAYBARGE	51.10	4.88	2.24	45.24	0.000	0.000	314.34	0.00	0.00	0.00	0.00	0.00
10	LAYBARGE	46.45	4.71	2.11	49.89	0.000	0.004	314.32	0.00	0.00	0.00	0.00	0.00
12	LAYBARGE	38.36	4.42	1.99	57.99	0.000	0.000	314.29	0.00	0.00	0.00	0.00	0.00
13	LAYBARGE	35.36	4.31	2.63	60.99	8.255	0.000	314.25	0.00	0.00	0.00	0.00	0.00
15	LAYBARGE	26.35	3.79	3.26	70.02	0.000	0.000	314.22	0.00	0.00	0.00	0.00	0.00
16	LAYBARGE	23.33	3.62	5.30	73.04	23.707	0.000	313.99	0.00	0.00	0.00	0.00	0.00
18	LAYBARGE	11.93	2.14	7.31	84.54	0.000	0.000	314.06	0.00	0.00	0.00	0.00	0.00
19	LAYBARGE	8.89	1.76	9.20	87.60	21.797	0.000	313.83	0.00	0.00	0.00	0.00	0.00
21	LAYBARGE	6.13	1.21	11.13	90.42	0.000	0.000	313.96	0.00	0.00	0.00	0.00	0.00
22	LAYBARGE	3.11	0.62	12.91	93.49	20.385	0.000	313.73	0.00	0.00	0.00	0.00	0.00
24	LAYBARGE	-6.68	-1.95	14.66	103.61	0.000	0.000	313.65	0.00	0.00	0.00	0.00	0.00
27	STINGER	-7.54	-2.17	17.32	104.50	9.268	0.000	313.28	0.00	30.04	0.00	30.16	8.38
29	STINGER	-16.26	-4.94	18.31	113.65	33.625	0.000	310.27	-104.84	29.60	-162.31	192.18	53.38
32	STINGER	-25.55	-8.19	20.06	123.50	10.060	0.000	307.18	-64.11	29.11	-99.25	128.81	35.78
34	STINGER	-35.76	-12.09	22.01	134.43	36.256	0.000	303.09	-111.78	28.50	-173.05	202.21	56.17
36	STINGER	-38.54	-13.24	22.65	137.43	0.000	0.375	302.15	-58.88	28.34	-91.15	120.22	33.39
38	SAGBEND	-44.38	-15.71	23.00	143.77	0.000	0.000	299.76	7.78	27.97	12.04	40.89	11.36
39	SAGBEND	-49.95	-18.05	22.61	149.82	0.000	0.000	297.39	39.14	27.61	60.59	89.20	24.78
40	SAGBEND	-55.55	-20.35	21.87	155.87	0.000	0.000	295.06	55.19	27.26	85.44	113.82	31.62
41	SAGBEND	-61.19	-22.56	20.94	161.92	0.000	0.000	292.83	63.67	26.92	98.58	126.73	35.20
42	SAGBEND	-66.86	-24.67	19.91	167.97	0.000	0.000	290.71	68.40	26.59	105.89	133.84	37.18
43	SAGBEND	-72.56	-26.67	18.82	174.02	0.000	0.000	288.70	71.24	26.29	110.29	138.04	38.35
44	SAGBEND	-78.31	-28.57	17.70	180.07	0.000	0.000	286.80	73.12	26.00	113.21	140.77	39.10
45	SAGBEND	-84.09	-30.35	16.56	186.12	0.000	0.000	285.01	74.51	25.72	115.35	142.74	39.65
46	SAGBEND	-89.91	-32.02	15.39	192.17	0.000	0.000	283.35	75.61	25.47	117.06	144.29	40.08
47	SAGBEND	-95.75	-33.56	14.21	198.22	0.000	0.000	281.80	76.55	25.23	118.51	145.58	40.44
48	SAGBEND	-101.63	-34.99	13.02	204.27	0.000	0.000	280.37	77.36	25.01	119.77	146.71	40.75
49	SAGBEND	-107.54	-36.29	11.82	210.32	0.000	0.000	279.07	78.08	24.81	120.88	147.70	41.03
50	SAGBEND	-113.48	-37.47	10.60	216.37	0.000	0.000	277.89	78.70	24.63	121.83	148.54	41.26
51	SAGBEND	-119.44	-38.51	9.38	222.42	0.000	0.000	276.84	79.19	24.47	122.60	149.19	41.44
52	SAGBEND	-125.41	-39.44	8.14	228.47	0.000	0.000	275.92	79.51	24.33	123.09	149.60	41.55
53	SAGBEND	-131.41	-40.23	6.91	234.52	0.000	0.000	275.13	79.55	24.21	123.15	149.59	41.55
54	SAGBEND	-137.43	-40.89	5.68	240.57	0.000	0.000	274.47	79.13	24.11	122.50	148.87	41.35
55	SAGBEND	-143.45	-41.43	4.46	246.62	0.000	0.000	273.94	77.86	24.03	120.54	146.86	40.80
56	SAGBEND	-149.49	-41.83	3.27	252.67	0.000	0.000	273.54	75.03	23.97	116.15	142.43	39.56
57	SAGBEND	-155.53	-42.12	2.15	258.72	0.000	0.000	273.28	69.19	23.93	107.12	133.38	37.05
58	SAGBEND	-161.58	-42.29	1.15	264.77	0.049	0.000	273.14	57.58	23.90	89.14	115.40	32.06
59	SEABED	-167.63	-42.37	0.42	270.82	3.325	0.000	273.11	35.37	23.90	54.76	81.04	22.51

S T A T I C P I P E C O O R D I N A T E S, F O R C E S A N D S T R E S S E S

NODE NO.	PIPE SECTION	X COORD (M)	Y COORD (M)	VERT ANGLE (DEG)	PIPE LENGTH (M)	SUPPORT REACTION (KN)	SEPARA -TION (M)	AXIAL TENSION (KN)	BENDING MOMENT (KN-M)	TENSILE STRESS (MPA)	BENDING STRESS (MPA)	TOTAL STRESS (MPA)	PERCNT YIELD (PCT)
60	SEABED	-173.68	-42.39	0.06	276.87	7.057	0.000	273.13	12.58	23.90	19.48	45.84	12.73
61	SEABED	-179.73	-42.39	-0.04	282.92	7.219	0.000	273.14	1.65	23.90	2.56	29.02	8.06
62	SEABED	-185.78	-42.39	-0.03	288.97	6.601	0.000	273.13	-1.18	23.90	-1.82	28.29	7.86
63	SEABED	-191.83	-42.39	-0.01	295.02	6.185	0.000	273.13	-1.03	23.90	-1.59	28.06	7.79
64	SEABED	-197.88	-42.39	0.00	301.07	6.034	0.000	273.13	-0.44	23.90	-0.68	27.15	7.54
65	SEABED	-203.93	-42.39	0.00	307.12	6.012	0.000	273.13	-0.09	23.90	-0.14	26.63	7.40
66	SEABED	-209.98	-42.39	0.00	313.17	6.026	0.000	273.13	0.02	23.90	0.03	26.52	7.37
67	SEABED	-216.03	-42.39	0.00	319.22	6.038	0.000	273.13	0.03	23.90	0.04	26.53	7.37
68	SEABED	-222.08	-42.39	0.00	325.27	6.043	0.000	273.13	0.01	23.90	0.02	26.51	7.36
69	SEABED	-228.13	-42.39	0.00	331.32	6.044	0.000	273.13	0.00	23.90	0.01	26.49	7.36
70	SEABED	-234.18	-42.39	0.00	337.37	6.044	0.000	273.13	0.00	23.90	0.00	26.49	7.36
71	SEABED	-240.23	-42.39	0.00	343.42	6.043	0.000	273.13	0.00	23.90	0.00	26.49	7.36
72	SEABED	-246.28	-42.39	0.00	349.47	6.043	0.000	273.13	0.00	23.90	0.00	26.49	7.36
73	SEABED	-252.33	-42.39	0.00	355.52	6.043	0.000	273.13	0.00	23.90	0.00	26.49	7.36
74	SEABED	-258.38	-42.39	0.00	361.57	6.043	0.000	273.13	0.00	23.90	0.00	26.49	7.36
75	SEABED	-264.43	-42.39	0.00	367.62	0.000	0.000	273.13	0.00	23.90	0.00	26.49	7.36

S T A T I C P I P E C O O R D I N A T E S, F O R C E S A N D S T R E S S E S

NODE NO.	PIPE SECTION	X COORD (M)	Y COORD (M)	VERT ANGLE (DEG)	PIPE LENGTH (M)	SUPPORT REACTION (KN)	SEPARA -TION (M)	AXIAL TENSION (KN)	BENDING MOMENT (KN-M)	TENSILE STRESS (MPA)	BENDING STRESS (MPA)	TOTAL STRESS (MPA)	PERCNT YIELD (PCT)
1	LAYBARGE	96.31	6.41	1.69	0.00	0.655	0.000	0.00	0.00	0.00	0.00	0.00	0.00
3	LAYBARGE	84.28	6.05	1.70	12.04	1.244	0.000	-0.04	0.00	0.00	0.00	0.00	0.00
5	LAYBARGE	73.45	5.73	1.89	22.87	1.315	0.000	-0.08	0.00	0.00	0.00	0.00	0.00
7	TENSIONR	60.11	5.24	2.19	36.23	1.867	0.000	314.38	0.00	0.00	0.00	0.00	0.00
9	LAYBARGE	51.10	4.88	2.24	45.24	0.000	0.000	314.34	0.00	0.00	0.00	0.00	0.00
10	LAYBARGE	46.45	4.71	2.11	49.89	0.000	0.004	314.32	0.00	0.00	0.00	0.00	0.00
12	LAYBARGE	38.36	4.42	1.99	57.99	0.000	0.000	314.29	0.00	0.00	0.00	0.00	0.00
13	LAYBARGE	35.36	4.31	2.63	60.99	8.255	0.000	314.25	0.00	0.00	0.00	0.00	0.00
15	LAYBARGE	26.35	3.79	3.26	70.02	0.000	0.000	314.23	0.00	0.00	0.00	0.00	0.00
16	LAYBARGE	23.33	3.62	5.30	73.04	23.707	0.000	313.99	0.00	0.00	0.00	0.00	0.00
18	LAYBARGE	11.93	2.14	7.31	84.54	0.000	0.000	314.06	0.00	0.00	0.00	0.00	0.00
19	LAYBARGE	8.90	1.76	9.20	87.60	21.795	0.000	313.83	0.00	0.00	0.00	0.00	0.00
21	LAYBARGE	6.13	1.21	11.13	90.42	0.000	0.000	313.96	0.00	0.00	0.00	0.00	0.00
22	LAYBARGE	3.11	0.62	12.57	93.49	16.641	0.000	313.79	0.00	0.00	0.00	0.00	0.00
24	LAYBARGE	-6.71	-1.83	13.98	103.61	0.000	0.000	313.67	0.00	0.00	0.00	0.00	0.00
27	STINGER	-7.56	-2.04	15.10	104.49	13.282	0.000	313.58	0.00	0.00	0.00	0.00	0.00
29	STINGER	-16.33	-4.61	18.35	113.63	4.414	0.000	313.19	0.00	29.90	0.00	30.15	8.37
32	STINGER	-25.68	-7.78	19.78	123.51	41.604	0.000	309.58	-140.67	29.37	-217.79	247.57	68.77
34	STINGER	-35.87	-11.74	22.45	134.44	26.247	0.000	305.87	-93.68	28.79	-145.03	174.45	48.46
36	STINGER	-38.64	-12.90	22.98	137.44	0.000	0.371	304.86	-46.05	28.62	-71.30	100.62	27.95
38	SAGBEND	-44.46	-15.39	23.18	143.77	0.000	0.000	302.42	13.66	28.25	21.15	50.25	13.96
39	SAGBEND	-50.03	-17.75	22.73	149.82	0.000	0.000	300.02	41.82	27.88	64.74	93.60	26.00
40	SAGBEND	-55.62	-20.05	21.95	155.87	0.000	0.000	297.69	56.23	27.53	87.06	115.68	32.13
41	SAGBEND	-61.25	-22.27	21.02	161.92	0.000	0.000	295.46	63.88	27.19	98.89	127.30	35.36
42	SAGBEND	-66.92	-24.39	19.99	167.97	0.000	0.000	293.33	68.17	26.86	105.53	133.73	37.15
43	SAGBEND	-72.62	-26.40	18.91	174.02	0.000	0.000	291.31	70.78	26.55	109.58	137.58	38.22
44	SAGBEND	-78.36	-28.31	17.80	180.07	0.000	0.000	289.40	72.54	26.26	112.30	140.12	38.92
45	SAGBEND	-84.14	-30.10	16.66	186.12	0.000	0.000	287.61	73.85	25.99	114.34	141.98	39.44
46	SAGBEND	-89.96	-31.78	15.51	192.17	0.000	0.000	285.93	74.92	25.73	115.99	143.47	39.85
47	SAGBEND	-95.80	-33.34	14.34	198.22	0.000	0.000	284.37	75.83	25.49	117.40	144.73	40.20
48	SAGBEND	-101.68	-34.77	13.16	204.27	0.000	0.000	282.93	76.64	25.27	118.65	145.84	40.51
49	SAGBEND	-107.58	-36.09	11.96	210.32	0.000	0.000	281.61	77.35	25.07	119.75	146.81	40.78
50	SAGBEND	-113.51	-37.28	10.76	216.37	0.000	0.000	280.42	77.97	24.89	120.71	147.65	41.01
51	SAGBEND	-119.47	-38.35	9.54	222.42	0.000	0.000	279.35	78.48	24.73	121.49	148.33	41.20
52	SAGBEND	-125.45	-39.29	8.32	228.47	0.000	0.000	278.41	78.82	24.58	122.03	148.78	41.33
53	SAGBEND	-131.44	-40.10	7.10	234.52	0.000	0.000	277.60	78.93	24.46	122.20	148.87	41.35
54	SAGBEND	-137.45	-40.78	5.88	240.57	0.000	0.000	276.92	78.63	24.35	121.73	148.33	41.20
55	SAGBEND	-143.48	-41.34	4.67	246.62	0.000	0.000	276.37	77.59	24.27	120.12	146.67	40.74
56	SAGBEND	-149.51	-41.77	3.48	252.67	0.000	0.000	275.95	75.18	24.20	116.39	142.91	39.70
57	SAGBEND	-155.55	-42.07	2.35	258.72	0.000	0.000	275.66	70.17	24.16	108.63	135.12	37.53
58	SAGBEND	-161.60	-42.27	1.33	264.77	0.003	0.000	275.50	60.11	24.13	93.06	119.54	33.21

59	SEABED	-167.65	-42.36	0.53	270.82	2.251	0.000	275.45	40.35	24.12	62.47	88.97	24.71

S T A T I C P I P E C O O R D I N A T E S, F O R C E S A N D S T R E S S E S

NODE NO.	PIPE SECTION	X COORD (M)	Y COORD (M)	VERT ANGLE (DEG)	PIPE LENGTH (M)	SUPPORT REACTION (KN)	SEPARA -TION (M)	AXIAL TENSION (KN)	BENDING MOMENT (KN-M)	TENSILE STRESS (MPA)	BENDING STRESS (MPA)	TOTAL STRESS (MPA)	PERCNT YIELD (PCT)
60	SEABED	-173.70	-42.39	0.10	276.87	6.695	0.000	275.47	16.06	24.12	24.87	51.44	14.29
61	SEABED	-179.75	-42.39	-0.03	282.92	7.296	0.000	275.48	2.97	24.12	4.59	31.26	8.68
62	SEABED	-185.80	-42.39	-0.04	288.97	6.713	0.000	275.47	-0.97	24.12	-1.49	28.19	7.83
63	SEABED	-191.85	-42.39	-0.02	295.02	6.242	0.000	275.47	-1.13	24.12	-1.74	28.43	7.90
64	SEABED	-197.90	-42.39	0.00	301.07	6.050	0.000	275.47	-0.53	24.12	-0.83	27.53	7.65
65	SEABED	-203.95	-42.39	0.00	307.12	6.012	0.000	275.47	-0.14	24.12	-0.21	26.92	7.48
66	SEABED	-210.00	-42.39	0.00	313.17	6.023	0.000	275.47	0.01	24.12	0.01	26.72	7.42
67	SEABED	-216.05	-42.39	0.00	319.22	6.036	0.000	275.47	0.03	24.12	0.05	26.75	7.43
68	SEABED	-222.10	-42.39	0.00	325.27	6.042	0.000	275.47	0.02	24.12	0.03	26.74	7.43
69	SEABED	-228.15	-42.39	0.00	331.32	6.044	0.000	275.47	0.01	24.12	0.01	26.72	7.42
70	SEABED	-234.20	-42.39	0.00	337.37	6.044	0.000	275.47	0.00	24.12	0.00	26.71	7.42
71	SEABED	-240.25	-42.39	0.00	343.42	6.043	0.000	275.47	0.00	24.12	0.00	26.71	7.42
72	SEABED	-246.30	-42.39	0.00	349.47	6.043	0.000	275.47	0.00	24.12	0.00	26.71	7.42
73	SEABED	-252.35	-42.39	0.00	355.52	6.043	0.000	275.47	0.00	24.12	0.00	26.71	7.42
74	SEABED	-258.40	-42.39	0.00	361.57	6.043	0.000	275.47	0.00	24.12	0.00	26.71	7.42
75	SEABED	-264.45	-42.39	0.00	367.62	0.000	0.000	275.47	0.00	24.12	0.00	26.71	7.42

S T A T I C P I P E C O O R D I N A T E S, F O R C E S A N D S T R E S S E S

NODE NO.	PIPE SECTION	X COORD (M)	Y COORD (M)	VERT ANGLE (DEG)	PIPE LENGTH (M)	SUPPORT REACTION (KN)	SEPARA -TION (M)	AXIAL TENSION (KN)	BENDING MOMENT (KN-M)	TENSILE STRESS (MPA)	BENDING STRESS (MPA)	TOTAL STRESS (MPA)	PERCNT YIELD (PCT)
1	LAYBARGE	96.31	6.41	1.69	0.00	0.655	0.000	0.00	0.00	0.00	0.00	0.00	0.00
3	LAYBARGE	84.28	6.05	1.70	12.04	1.244	0.000	-0.04	0.00	0.00	0.00	0.00	0.00
5	LAYBARGE	73.45	5.73	1.89	22.87	1.315	0.000	-0.08	0.00	0.00	0.00	0.00	0.00
7	TENSIONR	60.11	5.24	2.19	36.23	1.858	0.000	301.78	0.00	0.00	0.00	0.00	0.00
9	LAYBARGE	51.10	4.88	2.24	45.24	0.000	0.000	301.74	0.00	0.00	0.00	0.00	0.00
10	LAYBARGE	46.45	4.70	2.11	49.89	0.000	0.003	301.72	0.00	0.00	0.00	0.00	0.00
12	LAYBARGE	38.36	4.42	1.99	57.99	0.000	0.000	301.69	0.00	0.00	0.00	0.00	0.00
13	LAYBARGE	35.36	4.31	2.63	60.99	8.004	0.000	301.65	0.00	0.00	0.00	0.00	0.00
15	LAYBARGE	26.35	3.79	3.26	70.02	0.000	0.000	301.63	0.00	0.00	0.00	0.00	0.00
16	LAYBARGE	23.33	3.62	5.29	73.04	22.815	0.000	301.40	0.00	0.00	0.00	0.00	0.00
18	LAYBARGE	11.93	2.14	7.31	84.54	0.000	0.000	301.46	0.00	0.00	0.00	0.00	0.00
19	LAYBARGE	8.89	1.76	9.20	87.60	20.967	0.000	301.24	0.00	0.00	0.00	0.00	0.00
21	LAYBARGE	6.13	1.21	11.13	90.42	0.000	0.000	301.36	0.00	0.00	0.00	0.00	0.00
22	LAYBARGE	3.11	0.62	12.60	93.49	16.311	0.000	301.19	0.00	0.00	0.00	0.00	0.00
24	LAYBARGE	-6.71	-1.84	14.04	103.61	0.000	0.000	301.07	0.00	0.00	0.00	0.00	0.00
27	STINGER	-7.55	-2.05	15.19	104.49	13.077	0.000	300.98	0.00	0.00	0.00	0.00	0.00
29	STINGER	-16.33	-4.63	18.54	113.63	3.907	0.000	300.58	0.00	28.68	0.00	28.93	8.04
32	STINGER	-25.67	-7.85	20.03	123.51	42.304	0.000	296.90	-145.45	28.14	-225.18	253.74	70.48
34	STINGER	-35.83	-11.86	22.80	134.44	25.994	0.000	293.16	-95.34	27.56	-147.60	175.80	48.83
36	STINGER	-38.60	-13.04	23.34	137.45	0.000	0.369	292.14	-47.25	27.39	-73.15	101.26	28.13
38	SAGBEND	-44.39	-15.56	23.55	143.77	0.000	0.000	289.67	13.66	27.01	21.15	49.02	13.62
39	SAGBEND	-49.95	-17.96	23.09	149.82	0.000	0.000	287.23	42.88	26.64	66.38	94.00	26.11
40	SAGBEND	-55.53	-20.29	22.29	155.87	0.000	0.000	284.87	58.08	26.28	89.91	117.30	32.58
41	SAGBEND	-61.14	-22.54	21.32	161.92	0.000	0.000	282.60	66.27	25.93	102.59	129.76	36.04
42	SAGBEND	-66.80	-24.69	20.25	167.97	0.000	0.000	280.44	70.93	25.60	109.82	136.77	37.99
43	SAGBEND	-72.50	-26.73	19.13	174.02	0.000	0.000	278.39	73.81	25.29	114.27	141.03	39.17
44	SAGBEND	-78.23	-28.65	17.97	180.07	0.000	0.000	276.46	75.76	25.00	117.29	143.86	39.96
45	SAGBEND	-84.01	-30.46	16.78	186.12	0.000	0.000	274.65	77.22	24.72	119.55	145.94	40.54
46	SAGBEND	-89.82	-32.15	15.58	192.17	0.000	0.000	272.96	78.40	24.46	121.38	147.61	41.00
47	SAGBEND	-95.66	-33.71	14.35	198.22	0.000	0.000	271.40	79.41	24.22	122.94	149.02	41.39
48	SAGBEND	-101.54	-35.15	13.11	204.27	0.000	0.000	269.96	80.29	24.00	124.30	150.24	41.73
49	SAGBEND	-107.44	-36.45	11.86	210.32	0.000	0.000	268.65	81.06	23.80	125.49	151.30	42.03
50	SAGBEND	-113.38	-37.63	10.60	216.37	0.000	0.000	267.47	81.70	23.62	126.49	152.18	42.27
51	SAGBEND	-119.34	-38.68	9.33	222.42	0.000	0.000	266.43	82.20	23.46	127.25	152.85	42.46
52	SAGBEND	-125.32	-39.59	8.05	228.47	0.000	0.000	265.51	82.47	23.32	127.68	153.19	42.55
53	SAGBEND	-131.32	-40.37	6.77	234.52	0.000	0.000	264.73	82.40	23.20	127.57	153.00	42.50
54	SAGBEND	-137.33	-41.02	5.50	240.57	0.000	0.000	264.09	81.74	23.10	126.54	151.91	42.20
55	SAGBEND	-143.36	-41.53	4.24	246.62	0.000	0.000	263.58	79.99	23.03	123.84	149.16	41.43
56	SAGBEND	-149.40	-41.92	3.03	252.67	0.000	0.000	263.21	76.25	22.97	118.04	143.33	39.81
57	SAGBEND	-155.44	-42.17	1.90	258.72	0.000	0.000	262.98	68.73	22.93	106.41	131.68	36.58
58	SAGBEND	-161.49	-42.32	0.93	264.77	0.371	0.000	262.87	54.03	22.91	83.65	108.92	30.26
59	SEABED	-167.54	-42.38	0.28	270.82	4.936	0.000	262.87	28.55	22.91	44.20	69.52	19.31

S T A T I C P I P E C O O R D I N A T E S, F O R C E S A N D S T R E S S E S

NODE NO.	PIPE SECTION	X COORD (M)	Y COORD (M)	VERT ANGLE (DEG)	PIPE LENGTH (M)	SUPPORT REACTION (KN)	SEPARA -TION (M)	AXIAL TENSION (KN)	BENDING MOMENT (KN-M)	TENSILE STRESS (MPA)	BENDING STRESS (MPA)	TOTAL STRESS (MPA)	PERCNT YIELD (PCT)
60	SEABED	-173.59	-42.40	0.01	276.87	7.390	0.000	262.89	8.40	22.91	13.01	38.42	10.67
61	SEABED	-179.64	-42.39	-0.04	282.92	7.088	0.000	262.89	0.21	22.91	0.33	25.84	7.18
62	SEABED	-185.69	-42.39	-0.03	288.97	6.459	0.000	262.89	-1.35	22.91	-2.09	27.58	7.66
63	SEABED	-191.74	-42.39	-0.01	295.02	6.119	0.000	262.89	-0.88	22.91	-1.37	26.86	7.46
64	SEABED	-197.79	-42.39	0.00	301.07	6.017	0.000	262.89	-0.31	22.91	-0.49	25.99	7.22
65	SEABED	-203.84	-42.39	0.00	307.12	6.013	0.000	262.89	-0.04	22.91	-0.06	25.57	7.10
66	SEABED	-209.89	-42.39	0.00	313.17	6.029	0.000	262.89	0.03	22.91	0.05	25.56	7.10
67	SEABED	-215.94	-42.39	0.00	319.22	6.040	0.000	262.89	0.03	22.91	0.04	25.55	7.10
68	SEABED	-221.99	-42.39	0.00	325.27	6.043	0.000	262.89	0.01	22.91	0.02	25.53	7.09
69	SEABED	-228.04	-42.39	0.00	331.32	6.044	0.000	262.89	0.00	22.91	0.00	25.52	7.09
70	SEABED	-234.09	-42.39	0.00	337.37	6.044	0.000	262.89	0.00	22.91	0.00	25.51	7.09
71	SEABED	-240.14	-42.39	0.00	343.42	6.043	0.000	262.89	0.00	22.91	0.00	25.51	7.09
72	SEABED	-246.19	-42.39	0.00	349.47	6.043	0.000	262.89	0.00	22.91	0.00	25.51	7.09
73	SEABED	-252.24	-42.39	0.00	355.52	6.043	0.000	262.89	0.00	22.91	0.00	25.51	7.09
74	SEABED	-258.29	-42.39	0.00	361.57	0.000	0.000	262.89	0.00	22.91	0.00	25.51	7.09

S T A T I C P I P E C O O R D I N A T E S, F O R C E S A N D S T R E S S E S

NODE NO.	PIPE SECTION	X COORD (M)	Y COORD (M)	VERT ANGLE (DEG)	PIPE LENGTH (M)	SUPPORT REACTION (KN)	SEPARA -TION (M)	AXIAL TENSION (KN)	BENDING MOMENT (KN-M)	TENSILE STRESS (MPA)	BENDING STRESS (MPA)	TOTAL STRESS (MPA)	PERCNT YIELD (PCT)
1	LAYBARGE	96.31	6.41	1.69	0.00	0.655	0.000	0.00	0.00	0.00	0.00	0.00	0.00
3	LAYBARGE	84.28	6.05	1.70	12.04	1.244	0.000	-0.04	0.00	0.00	0.00	0.00	0.00
5	LAYBARGE	73.45	5.73	1.89	22.87	1.315	0.000	-0.08	0.00	0.00	0.00	0.00	0.00
7	TENSIONR	60.11	5.24	2.19	36.23	1.858	0.000	301.75	0.00	0.00	0.00	0.00	0.00
9	LAYBARGE	51.10	4.88	2.24	45.24	0.000	0.000	301.72	0.00	0.00	0.00	0.00	0.00
10	LAYBARGE	46.45	4.70	2.11	49.89	0.000	0.003	301.70	0.00	0.00	0.00	0.00	0.00
12	LAYBARGE	38.36	4.42	1.99	57.99	0.000	0.000	301.67	0.00	0.00	0.00	0.00	0.00
13	LAYBARGE	35.36	4.31	2.63	60.99	8.004	0.000	301.63	0.00	0.00	0.00	0.00	0.00
15	LAYBARGE	26.35	3.79	3.26	70.02	0.000	0.000	301.60	0.00	0.00	0.00	0.00	0.00
16	LAYBARGE	23.33	3.62	5.29	73.04	22.814	0.000	301.38	0.00	0.00	0.00	0.00	0.00
18	LAYBARGE	11.93	2.14	7.31	84.54	0.000	0.000	301.44	0.00	0.00	0.00	0.00	0.00
19	LAYBARGE	8.89	1.76	9.20	87.60	20.965	0.000	301.22	0.00	0.00	0.00	0.00	0.00
21	LAYBARGE	6.13	1.21	11.13	90.42	0.000	0.000	301.34	0.00	0.00	0.00	0.00	0.00
22	LAYBARGE	3.11	0.62	11.77	93.49	7.676	0.000	301.25	0.00	0.00	0.00	0.00	0.00
24	LAYBARGE	-6.77	-1.56	12.39	103.61	0.000	0.000	301.07	0.00	0.00	0.00	0.00	0.00
27	STINGER	-7.57	-1.74	12.76	104.43	4.871	0.000	301.04	0.00	0.00	0.00	0.00	0.00
29	STINGER	-16.48	-3.82	15.65	113.58	26.717	0.000	300.56	0.00	0.00	0.00	0.00	0.00
32	STINGER	-25.92	-6.91	22.66	123.52	23.150	0.000	299.58	0.00	28.45	0.00	28.84	8.01
34	STINGER	-35.99	-11.16	23.40	134.45	32.037	0.000	295.21	-77.88	27.79	-120.57	148.97	41.38
36	STINGER	-38.75	-12.36	23.83	137.46	0.000	0.410	294.11	-35.05	27.62	-54.27	82.56	22.93
38	SAGBEND	-44.52	-14.92	23.90	143.77	0.000	0.000	291.57	19.40	27.23	30.03	58.08	16.13
39	SAGBEND	-50.06	-17.35	23.38	149.82	0.000	0.000	289.11	45.52	26.85	70.47	98.28	27.30
40	SAGBEND	-55.63	-19.71	22.55	155.87	0.000	0.000	286.72	59.14	26.49	91.56	119.13	33.09
41	SAGBEND	-61.23	-21.99	21.57	161.92	0.000	0.000	284.42	66.53	26.14	102.99	130.34	36.21
42	SAGBEND	-66.88	-24.16	20.51	167.97	0.000	0.000	282.24	70.78	25.81	109.58	136.71	37.97
43	SAGBEND	-72.57	-26.22	19.39	174.02	0.000	0.000	280.17	73.44	25.49	113.70	140.63	39.06
44	SAGBEND	-78.29	-28.17	18.23	180.07	0.000	0.000	278.22	75.29	25.19	116.55	143.29	39.80
45	SAGBEND	-84.06	-30.01	17.05	186.12	0.000	0.000	276.38	76.69	24.91	118.73	145.29	40.36
46	SAGBEND	-89.86	-31.72	15.86	192.17	0.000	0.000	274.66	77.85	24.65	120.52	146.91	40.81
47	SAGBEND	-95.70	-33.31	14.64	198.22	0.000	0.000	273.07	78.84	24.41	122.06	148.30	41.19
48	SAGBEND	-101.57	-34.78	13.41	204.27	0.000	0.000	271.60	79.73	24.18	123.43	149.52	41.53
49	SAGBEND	-107.47	-36.12	12.17	210.32	0.000	0.000	270.26	80.50	23.98	124.63	150.60	41.83
50	SAGBEND	-113.40	-37.33	10.91	216.37	0.000	0.000	269.05	81.17	23.79	125.67	151.52	42.09
51	SAGBEND	-119.35	-38.41	9.65	222.42	0.000	0.000	267.97	81.71	23.63	126.50	152.24	42.29
52	SAGBEND	-125.32	-39.36	8.38	228.47	0.000	0.000	267.02	82.05	23.48	127.03	152.68	42.41
53	SAGBEND	-131.32	-40.17	7.11	234.52	0.000	0.000	266.21	82.10	23.36	127.10	152.67	42.41

54	SAGBEND	-137.33	-40.85	5.84	240.57	0.000	0.000	265.53	81.64	23.25	126.39	151.90	42.19
55	SAGBEND	-143.35	-41.40	4.58	246.62	0.000	0.000	264.99	80.28	23.17	124.29	149.75	41.60
56	SAGBEND	-149.39	-41.82	3.35	252.67	0.000	0.000	264.58	77.27	23.11	119.62	145.04	40.29
57	SAGBEND	-155.43	-42.11	2.20	258.72	0.000	0.000	264.31	71.13	23.06	110.12	135.51	37.64
58	SAGBEND	-161.48	-42.29	1.18	264.77	0.050	0.000	264.17	59.04	23.04	91.40	116.79	32.44
59	SEABED	-167.53	-42.37	0.42	270.82	3.371	0.000	264.14	36.14	23.03	55.96	81.38	22.60

S T A T I C P I P E C O O R D I N A T E S, F O R C E S A N D S T R E S S E S

NODE NO.	PIPE SECTION	X COORD (M)	Y COORD (M)	VERT ANGLE (DEG)	PIPE LENGTH (M)	SUPPORT REACTION (KN)	SEPARA -TION (M)	AXIAL TENSION (KN)	BENDING MOMENT (KN-M)	TENSILE STRESS (MPA)	BENDING STRESS (MPA)	TOTAL STRESS (MPA)	PERCNT YIELD (PCT)
60	SEABED	-173.58	-42.39	0.06	276.87	7.132	0.000	264.16	12.77	23.03	19.78	45.28	12.58
61	SEABED	-179.63	-42.39	-0.04	282.92	7.261	0.000	264.17	1.61	23.03	2.49	28.10	7.81
62	SEABED	-185.68	-42.39	-0.03	288.97	6.613	0.000	264.17	-1.25	23.03	-1.93	27.54	7.65
63	SEABED	-191.73	-42.39	-0.01	295.02	6.185	0.000	264.17	-1.07	23.03	-1.65	27.26	7.57
64	SEABED	-197.78	-42.39	0.00	301.07	6.031	0.000	264.17	-0.45	23.03	-0.69	26.32	7.31
65	SEABED	-203.83	-42.39	0.00	307.12	6.011	0.000	264.17	-0.09	23.03	-0.14	25.77	7.16
66	SEABED	-209.88	-42.39	0.00	313.17	6.025	0.000	264.17	0.02	23.03	0.03	25.67	7.13
67	SEABED	-215.93	-42.39	0.00	319.22	6.037	0.000	264.17	0.03	23.03	0.05	25.68	7.13
68	SEABED	-221.98	-42.39	0.00	325.27	6.043	0.000	264.17	0.01	23.03	0.02	25.66	7.13
69	SEABED	-228.03	-42.39	0.00	331.32	6.044	0.000	264.17	0.00	23.03	0.01	25.64	7.12
70	SEABED	-234.08	-42.39	0.00	337.37	6.044	0.000	264.17	0.00	23.03	0.00	25.63	7.12
71	SEABED	-240.13	-42.39	0.00	343.42	6.043	0.000	264.17	0.00	23.03	0.00	25.63	7.12
72	SEABED	-246.18	-42.39	0.00	349.47	6.043	0.000	264.17	0.00	23.03	0.00	25.63	7.12
73	SEABED	-252.23	-42.39	0.00	355.52	6.043	0.000	264.17	0.00	23.03	0.00	25.63	7.12
74	SEABED	-258.28	-42.39	0.00	361.57	0.000	0.000	264.17	0.00	23.03	0.00	25.63	7.12

S T A T I C P I P E C O O R D I N A T E S, F O R C E S A N D S T R E S S E S

NODE NO.	PIPE SECTION	X COORD (M)	Y COORD (M)	VERT ANGLE (DEG)	PIPE LENGTH (M)	SUPPORT REACTION (KN)	SEPARA -TION (M)	AXIAL TENSION (KN)	BENDING MOMENT (KN-M)	TENSILE STRESS (MPA)	BENDING STRESS (MPA)	TOTAL STRESS (MPA)	PERCNT YIELD (PCT)
1	LAYBARGE	96.31	6.41	1.69	0.00	0.655	0.000	0.00	0.00	0.00	0.00	0.00	0.00
3	LAYBARGE	84.28	6.05	1.70	12.04	1.244	0.000	-0.04	0.00	0.00	0.00	0.00	0.00
5	LAYBARGE	73.45	5.73	1.89	22.87	1.315	0.000	-0.08	0.00	0.00	0.00	0.00	0.00
7	TENSIONR	60.11	5.24	2.20	36.23	1.849	0.000	289.15	0.00	0.00	0.00	0.00	0.00
9	LAYBARGE	51.10	4.88	2.25	45.24	0.000	0.000	289.11	0.00	0.00	0.00	0.00	0.00
10	LAYBARGE	46.45	4.70	2.11	49.89	0.000	0.001	289.09	0.00	0.00	0.00	0.00	0.00
12	LAYBARGE	38.36	4.42	1.98	57.99	0.000	0.000	289.06	0.00	0.00	0.00	0.00	0.00
13	LAYBARGE	35.36	4.31	2.62	60.99	7.753	0.000	289.03	0.00	0.00	0.00	0.00	0.00
15	LAYBARGE	26.35	3.79	3.26	70.02	0.000	0.000	289.00	0.00	0.00	0.00	0.00	0.00
16	LAYBARGE	23.33	3.62	5.29	73.04	21.921	0.000	288.78	0.00	0.00	0.00	0.00	0.00
18	LAYBARGE	11.93	2.14	7.31	84.54	0.000	0.000	288.84	0.00	0.00	0.00	0.00	0.00
19	LAYBARGE	8.89	1.76	9.20	87.60	20.133	0.000	288.62	0.00	0.00	0.00	0.00	0.00
21	LAYBARGE	6.13	1.21	11.13	90.42	0.000	0.000	288.74	0.00	0.00	0.00	0.00	0.00
22	LAYBARGE	3.11	0.62	11.76	93.49	7.215	0.000	288.65	0.00	0.00	0.00	0.00	0.00
24	LAYBARGE	-6.77	-1.55	12.36	103.61	0.000	0.000	288.46	0.00	0.00	0.00	0.00	0.00
27	STINGER	-7.53	-1.72	12.70	104.38	4.474	0.000	288.44	0.00	0.00	0.00	0.00	0.00
29	STINGER	-16.43	-3.79	15.69	113.53	26.839	0.000	287.94	0.00	0.00	0.00	0.00	0.00
32	STINGER	-25.88	-6.91	23.09	123.48	23.464	0.000	286.90	0.00	27.23	0.00	27.61	7.67
34	STINGER	-35.92	-11.23	23.84	134.41	31.894	0.000	282.45	-77.97	26.56	-120.70	147.88	41.08
36	STINGER	-38.67	-12.46	24.27	137.43	0.000	0.409	281.33	-34.92	26.38	-54.06	81.13	22.54
38	SAGBEND	-44.45	-15.08	24.33	143.77	0.000	0.000	278.73	20.38	25.98	31.55	58.37	16.21
39	SAGBEND	-49.97	-17.55	23.79	149.82	0.000	0.000	276.23	47.19	25.60	73.05	99.62	27.67
40	SAGBEND	-55.52	-19.95	22.93	155.87	0.000	0.000	273.79	61.41	25.23	95.07	121.40	33.72
41	SAGBEND	-61.12	-22.26	21.92	161.92	0.000	0.000	271.47	69.25	24.88	107.22	133.31	37.03
42	SAGBEND	-66.75	-24.46	20.80	167.97	0.000	0.000	269.25	73.85	24.54	114.33	140.21	38.95
43	SAGBEND	-72.43	-26.55	19.63	174.02	0.000	0.000	267.15	76.77	24.22	118.85	144.52	40.15
44	SAGBEND	-78.15	-28.53	18.43	180.07	0.000	0.000	265.17	78.81	23.92	122.01	147.49	40.97
45	SAGBEND	-83.91	-30.38	17.19	186.12	0.000	0.000	263.32	80.37	23.63	124.42	149.72	41.59
46	SAGBEND	-89.71	-32.10	15.93	192.17	0.000	0.000	261.59	81.65	23.37	126.41	151.54	42.10
47	SAGBEND	-95.54	-33.70	14.66	198.22	0.000	0.000	259.99	82.75	23.12	128.12	153.09	42.53
48	SAGBEND	-101.41	-35.16	13.37	204.27	0.000	0.000	258.53	83.72	22.90	129.61	154.44	42.90
49	SAGBEND	-107.31	-36.50	12.06	210.32	0.000	0.000	257.19	84.55	22.70	130.90	155.61	43.22
50	SAGBEND	-113.24	-37.69	10.75	216.37	0.000	0.000	255.99	85.25	22.51	131.98	156.57	43.49
51	SAGBEND	-119.20	-38.75	9.42	222.42	0.000	0.000	254.93	85.76	22.35	132.77	157.26	43.68
52	SAGBEND	-125.18	-39.67	8.09	228.47	0.000	0.000	254.01	86.01	22.21	133.15	157.55	43.76
53	SAGBEND	-131.18	-40.45	6.75	234.52	0.000	0.000	253.23	85.82	22.09	132.86	157.19	43.66
54	SAGBEND	-137.19	-41.10	5.43	240.57	0.000	0.000	252.60	84.90	21.99	131.43	155.70	43.25
55	SAGBEND	-143.22	-41.60	4.13	246.62	0.000	0.000	252.10	82.66	21.92	127.97	152.18	42.27
56	SAGBEND	-149.26	-41.97	2.88	252.67	0.000	0.000	251.75	78.00	21.86	120.75	144.94	40.26
57	SAGBEND	-155.31	-42.21	1.73	258.72	0.000	0.000	251.54	68.84	21.83	106.57	130.74	36.32
58	SAGBEND	-161.35	-42.34	0.79	264.77	0.925	0.000	251.46	51.21	21.81	79.27	103.45	28.74
59	SEABED	-167.40	-42.39	0.20	270.82	5.952	0.000	251.47	24.05	21.81	37.23	61.46	17.07

S T A T I C P I P E C O O R D I N A T E S, F O R C E S A N D S T R E S S E S

NODE NO.	PIPE SECTION	X COORD (M)	Y COORD (M)	VERT ANGLE (DEG)	PIPE LENGTH (M)	SUPPORT REACTION (KN)	SEPARA -TION (M)	AXIAL TENSION (KN)	BENDING MOMENT (KN-M)	TENSILE STRESS (MPA)	BENDING STRESS (MPA)	TOTAL STRESS (MPA)	PERCNT YIELD (PCT)
60	SEABED	-173.45	-42.40	-0.01	276.87	7.518	0.000	251.49	5.95	21.81	9.21	33.55	9.32
61	SEABED	-179.50	-42.39	-0.04	282.92	6.982	0.000	251.49	-0.55	21.81	-0.85	25.27	7.02
62	SEABED	-185.55	-42.39	-0.03	288.97	6.369	0.000	251.49	-1.40	21.81	-2.17	26.57	7.38
63	SEABED	-191.60	-42.39	-0.01	295.02	6.080	0.000	251.49	-0.78	21.81	-1.21	25.62	7.12
64	SEABED	-197.65	-42.39	0.00	301.07	6.008	0.000	251.49	-0.24	21.81	-0.37	24.79	6.89
65	SEABED	-203.70	-42.39	0.00	307.12	6.015	0.000	251.49	-0.01	21.81	-0.02	24.44	6.79
66	SEABED	-209.75	-42.39	0.00	313.17	6.032	0.000	251.49	0.04	21.81	0.06	24.48	6.80
67	SEABED	-215.80	-42.39	0.00	319.22	6.041	0.000	251.49	0.02	21.81	0.04	24.46	6.80
68	SEABED	-221.85	-42.39	0.00	325.27	6.044	0.000	251.49	0.01	21.81	0.01	24.44	6.79
69	SEABED	-227.90	-42.39	0.00	331.32	6.044	0.000	251.49	0.00	21.81	0.00	24.43	6.79
70	SEABED	-233.95	-42.39	0.00	337.37	6.044	0.000	251.49	0.00	21.81	0.00	24.43	6.79
71	SEABED	-240.00	-42.39	0.00	343.42	6.043	0.000	251.49	0.00	21.81	0.00	24.43	6.79
72	SEABED	-246.05	-42.39	0.00	349.47	6.043	0.000	251.49	0.00	21.81	0.00	24.43	6.79
73	SEABED	-252.10	-42.39	0.00	355.52	6.043	0.000	251.49	0.00	21.81	0.00	24.43	6.79
74	SEABED	-258.15	-42.39	0.00	361.57	0.000	0.000	251.49	0.00	21.81	0.00	24.43	6.79

S T A T I C P I P E C O O R D I N A T E S, F O R C E S A N D S T R E S S E S

NODE NO.	PIPE SECTION	X COORD (M)	Y COORD (M)	VERT ANGLE (DEG)	PIPE LENGTH (M)	SUPPORT REACTION (KN)	SEPARA -TION (M)	AXIAL TENSION (KN)	BENDING MOMENT (KN-M)	TENSILE STRESS (MPA)	BENDING STRESS (MPA)	TOTAL STRESS (MPA)	PERCNT YIELD (PCT)
1	LAYBARGE	96.31	6.41	1.69	0.00	0.655	0.000	0.00	0.00	0.00	0.00	0.00	0.00
3	LAYBARGE	84.28	6.05	1.70	12.04	1.244	0.000	-0.04	0.00	0.00	0.00	0.00	0.00
5	LAYBARGE	73.45	5.73	1.89	22.87	1.315	0.000	-0.08	0.00	0.00	0.00	0.00	0.00
7	TENSIONR	60.11	5.24	2.20	36.23	1.849	0.000	289.17	0.00	0.00	0.00	0.00	0.00
9	LAYBARGE	51.10	4.88	2.25	45.24	0.000	0.000	289.14	0.00	0.00	0.00	0.00	0.00
10	LAYBARGE	46.45	4.70	2.11	49.89	0.000	0.001	289.12	0.00	0.00	0.00	0.00	0.00
12	LAYBARGE	38.36	4.42	1.98	57.99	0.000	0.000	289.08	0.00	0.00	0.00	0.00	0.00
13	LAYBARGE	35.36	4.31	2.62	60.99	7.753	0.000	289.05	0.00	0.00	0.00	0.00	0.00
15	LAYBARGE	26.35	3.79	3.26	70.02	0.000	0.000	289.02	0.00	0.00	0.00	0.00	0.00
16	LAYBARGE	23.33	3.62	5.29	73.04	21.921	0.000	288.80	0.00	0.00	0.00	0.00	0.00
18	LAYBARGE	11.93	2.14	7.31	84.54	0.000	0.000	288.86	0.00	0.00	0.00	0.00	0.00
19	LAYBARGE	8.89	1.76	9.20	87.60	20.132	0.000	288.64	0.00	0.00	0.00	0.00	0.00
21	LAYBARGE	6.13	1.21	11.13	90.42	0.000	0.000	288.76	0.00	0.00	0.00	0.00	0.00
22	LAYBARGE	3.11	0.62	11.24	93.49	2.060	0.000	288.69	0.00	0.00	0.00	0.00	0.00
24	LAYBARGE	-6.81	-1.38	11.33	103.61	0.000	0.000	288.50	0.00	0.00	0.00	0.00	0.00
27	STINGER	-7.58	-1.53	11.23	104.39	0.000	0.004	288.48	0.00	0.00	0.00	0.00	0.00
29	STINGER	-16.55	-3.30	13.75	113.54	26.670	0.000	288.01	0.00	0.00	0.00	0.00	0.00
32	STINGER	-26.09	-6.10	18.80	123.49	25.870	0.000	287.76	0.00	0.00	0.00	0.00	0.00
34	STINGER	-36.28	-10.07	25.87	134.43	31.568	0.000	286.72	0.00	27.04	0.00	27.60	7.67
36	STINGER	-39.00	-11.38	25.79	137.45	0.000	0.211	285.39	20.71	26.83	32.07	59.53	16.54
38	SAGBEND	-44.70	-14.11	25.22	143.77	0.000	0.000	282.63	47.14	26.41	72.97	100.16	27.82
39	SAGBEND	-50.20	-16.65	24.37	149.82	0.000	0.000	280.06	60.27	26.02	93.31	120.25	33.40
40	SAGBEND	-55.73	-19.10	23.38	155.87	0.000	0.000	277.59	67.53	25.65	104.54	131.23	36.45
41	SAGBEND	-61.30	-21.45	22.29	161.92	0.000	0.000	275.24	71.81	25.29	111.17	137.63	38.23
42	SAGBEND	-66.92	-23.69	21.16	167.97	0.000	0.000	272.99	74.56	24.94	115.44	141.68	39.36
43	SAGBEND	-72.59	-25.81	19.98	174.02	0.000	0.000	270.86	76.54	24.62	118.49	144.52	40.14
44	SAGBEND	-78.29	-27.82	18.78	180.07	0.000	0.000	268.85	78.08	24.31	120.88	146.72	40.76
45	SAGBEND	-84.04	-29.71	17.56	186.12	0.000	0.000	266.96	79.38	24.02	122.90	148.55	41.26
46	SAGBEND	-89.83	-31.47	16.32	192.17	0.000	0.000	265.19	80.53	23.75	124.68	150.16	41.71
47	SAGBEND	-95.65	-33.11	15.07	198.22	0.000	0.000	263.55	81.57	23.50	126.28	151.60	42.11
48	SAGBEND	-101.51	-34.62	13.79	204.27	0.000	0.000	262.05	82.51	23.27	127.74	152.91	42.48
49	SAGBEND	-107.40	-35.99	12.51	210.32	0.000	0.000	260.67	83.35	23.06	129.03	154.07	42.80

50	SAGBEND	-113.32	-37.24	11.21	216.37	0.000	0.000	259.42	84.07	22.87	130.15	155.07	43.08
51	SAGBEND	-119.27	-38.34	9.90	222.42	0.000	0.000	258.31	84.64	22.70	131.04	155.86	43.29
52	SAGBEND	-125.24	-39.32	8.58	228.47	0.000	0.000	257.34	85.01	22.55	131.60	156.32	43.42
53	SAGBEND	-131.24	-40.15	7.26	234.52	0.000	0.000	256.51	85.03	22.42	131.64	156.28	43.41
54	SAGBEND	-137.25	-40.85	5.95	240.57	0.000	0.000	255.82	84.50	22.32	130.81	155.38	43.16
55	SAGBEND	-143.27	-41.40	4.65	246.62	0.000	0.000	255.26	82.96	22.23	128.44	152.96	42.49
56	SAGBEND	-149.30	-41.83	3.38	252.67	0.000	0.000	254.85	79.61	22.17	123.26	147.74	41.04
57	SAGBEND	-155.35	-42.12	2.20	258.72	0.000	0.000	254.58	72.89	22.13	112.84	137.30	38.14
58	SAGBEND	-161.39	-42.30	1.16	264.77	0.081	0.000	254.45	59.80	22.10	92.58	117.04	32.51
59	SEABED	-167.44	-42.37	0.40	270.82	3.722	0.000	254.43	35.57	22.10	55.06	79.55	22.10

S T A T I C P I P E C O O R D I N A T E S, F O R C E S A N D S T R E S S E S

NODE NO.	PIPE SECTION	X COORD (M)	Y COORD (M)	VERT ANGLE (DEG)	PIPE LENGTH (M)	SUPPORT REACTION (KN)	SEPARA -TION (M)	AXIAL TENSION (KN)	BENDING MOMENT (KN-M)	TENSILE STRESS (MPA)	BENDING STRESS (MPA)	TOTAL STRESS (MPA)	PERCNT YIELD (PCT)
60	SEABED	-173.49	-42.40	0.05	276.87	7.280	0.000	254.45	12.10	22.10	18.73	43.30	12.03
61	SEABED	-179.54	-42.39	-0.04	282.92	7.277	0.000	254.45	1.26	22.10	1.95	26.63	7.40
62	SEABED	-185.59	-42.39	-0.03	288.97	6.595	0.000	254.45	-1.36	22.10	-2.10	26.79	7.44
63	SEABED	-191.64	-42.39	-0.01	295.02	6.170	0.000	254.45	-1.07	22.10	-1.66	26.35	7.32
64	SEABED	-197.69	-42.39	0.00	301.07	6.024	0.000	254.45	-0.43	22.10	-0.67	25.37	7.05
65	SEABED	-203.74	-42.39	0.00	307.12	6.009	0.000	254.45	-0.08	22.10	-0.12	24.83	6.90
66	SEABED	-209.79	-42.39	0.00	313.17	6.025	0.000	254.45	0.03	22.10	0.04	24.75	6.88
67	SEABED	-215.84	-42.39	0.00	319.22	6.038	0.000	254.45	0.03	22.10	0.05	24.76	6.88
68	SEABED	-221.89	-42.39	0.00	325.27	6.043	0.000	254.45	0.01	22.10	0.02	24.73	6.87
69	SEABED	-227.94	-42.39	0.00	331.32	6.044	0.000	254.45	0.00	22.10	0.01	24.72	6.87
70	SEABED	-233.99	-42.39	0.00	337.37	6.044	0.000	254.45	0.00	22.10	0.00	24.71	6.86
71	SEABED	-240.04	-42.39	0.00	343.42	6.043	0.000	254.45	0.00	22.10	0.00	24.71	6.86
72	SEABED	-246.09	-42.39	0.00	349.47	6.043	0.000	254.45	0.00	22.10	0.00	24.71	6.86
73	SEABED	-252.14	-42.39	0.00	355.52	6.043	0.000	254.45	0.00	22.10	0.00	24.71	6.86
74	SEABED	-258.19	-42.39	0.00	361.57	0.000	0.000	254.45	0.00	22.10	0.00	24.71	6.86

S T A T I C P I P E C O O R D I N A T E S, F O R C E S A N D S T R E S S E S

NODE NO.	PIPE SECTION	X COORD (M)	Y COORD (M)	VERT ANGLE (DEG)	PIPE LENGTH (M)	SUPPORT REACTION (KN)	SEPARA -TION (M)	AXIAL TENSION (KN)	BENDING MOMENT (KN-M)	TENSILE STRESS (MPA)	BENDING STRESS (MPA)	TOTAL STRESS (MPA)	PERCNT YIELD (PCT)
1	LAYBARGE	96.31	6.41	1.69	0.00	0.655	0.000	0.00	0.00	0.00	0.00	0.00	0.00
3	LAYBARGE	84.28	6.05	1.70	12.04	1.244	0.000	-0.04	0.00	0.00	0.00	0.00	0.00
5	LAYBARGE	73.45	5.73	1.89	22.87	1.315	0.000	-0.08	0.00	0.00	0.00	0.00	0.00
7	TENSIONR	60.11	5.24	2.20	36.23	1.840	0.000	276.57	0.00	0.00	0.00	0.00	0.00
9	LAYBARGE	51.10	4.88	2.25	45.24	0.000	0.000	276.53	0.00	0.00	0.00	0.00	0.00
10	LAYBARGE	46.45	4.70	2.10	49.89	0.000	0.000	276.51	0.00	0.00	0.00	0.00	0.00
12	LAYBARGE	38.36	4.41	1.97	57.99	0.000	0.000	276.48	0.00	0.00	0.00	0.00	0.00
13	LAYBARGE	35.36	4.31	2.62	60.99	7.502	0.000	276.45	0.00	0.00	0.00	0.00	0.00
15	LAYBARGE	26.35	3.79	3.26	70.02	0.000	0.000	276.42	0.00	0.00	0.00	0.00	0.00
16	LAYBARGE	23.33	3.62	5.29	73.04	21.029	0.000	276.21	0.00	0.00	0.00	0.00	0.00
18	LAYBARGE	11.93	2.14	7.31	84.54	0.000	0.000	276.26	0.00	0.00	0.00	0.00	0.00
19	LAYBARGE	8.89	1.76	9.20	87.60	19.303	0.000	276.05	0.00	0.00	0.00	0.00	0.00
21	LAYBARGE	6.13	1.21	11.13	90.42	0.000	0.000	276.16	0.00	0.00	0.00	0.00	0.00
22	LAYBARGE	3.11	0.62	11.16	93.49	1.253	0.000	276.09	0.00	0.00	0.00	0.00	0.00
24	LAYBARGE	-6.82	-1.35	11.17	103.61	0.000	0.000	275.90	0.00	0.00	0.00	0.00	0.00
27	STINGER	-7.58	-1.50	11.07	104.39	0.000	0.013	275.88	0.00	0.00	0.00	0.00	0.00
29	STINGER	-16.55	-3.25	13.72	113.53	26.760	0.000	275.39	0.00	0.00	0.00	0.00	0.00
32	STINGER	-26.07	-6.05	19.03	123.46	26.135	0.000	275.14	0.00	0.00	0.00	0.00	0.00
34	STINGER	-36.23	-10.08	26.40	134.39	31.462	0.000	274.09	0.00	25.82	0.00	26.38	7.33
36	STINGER	-38.94	-11.43	26.32	137.42	0.000	0.204	272.74	21.25	25.61	32.89	59.13	16.43
38	SAGBEND	-44.65	-14.22	25.72	143.77	0.000	0.000	269.91	48.68	25.18	75.36	101.32	28.14
39	SAGBEND	-50.12	-16.80	24.85	149.82	0.000	0.000	267.29	62.48	24.78	96.73	122.44	34.01
40	SAGBEND	-55.63	-19.30	23.81	155.87	0.000	0.000	264.78	70.24	24.40	108.74	134.20	37.28
41	SAGBEND	-61.19	-21.69	22.69	161.92	0.000	0.000	262.38	74.89	24.03	115.94	141.16	39.21
42	SAGBEND	-66.79	-23.96	21.50	167.97	0.000	0.000	260.09	77.93	23.69	120.65	145.65	40.46
43	SAGBEND	-72.44	-26.12	20.27	174.02	0.000	0.000	257.93	80.13	23.36	124.05	148.83	41.34
44	SAGBEND	-78.14	-28.15	19.02	180.07	0.000	0.000	255.89	81.85	23.04	126.72	151.31	42.03
45	SAGBEND	-83.88	-30.06	17.73	186.12	0.000	0.000	253.98	83.31	22.75	128.97	153.38	42.60
46	SAGBEND	-89.67	-31.84	16.43	192.17	0.000	0.000	252.20	84.59	22.48	130.95	155.18	43.11
47	SAGBEND	-95.49	-33.48	15.11	198.22	0.000	0.000	250.55	85.73	22.23	132.73	156.80	43.56
48	SAGBEND	-101.35	-34.99	13.77	204.27	0.000	0.000	249.04	86.76	22.00	134.32	158.24	43.96
49	SAGBEND	-107.24	-36.36	12.42	210.32	0.000	0.000	247.67	87.66	21.79	135.72	159.51	44.31
50	SAGBEND	-113.16	-37.59	11.06	216.37	0.000	0.000	246.44	88.42	21.60	136.88	160.55	44.60
51	SAGBEND	-119.11	-38.68	9.68	222.42	0.000	0.000	245.35	88.97	21.43	137.73	161.30	44.80
52	SAGBEND	-125.09	-39.63	8.30	228.47	0.000	0.000	244.40	89.22	21.29	138.12	161.59	44.89
53	SAGBEND	-131.08	-40.43	6.91	234.52	0.000	0.000	243.60	88.98	21.17	137.76	161.16	44.77
54	SAGBEND	-137.10	-41.08	5.54	240.57	0.000	0.000	242.95	87.94	21.07	136.14	159.47	44.30
55	SAGBEND	-143.13	-41.60	4.19	246.62	0.000	0.000	242.45	85.44	20.99	132.27	155.56	43.21
56	SAGBEND	-149.17	-41.97	2.90	252.67	0.000	0.000	242.10	80.33	20.93	124.36	147.61	41.00
57	SAGBEND	-155.21	-42.21	1.73	258.72	0.000	0.000	241.89	70.39	20.90	108.98	132.22	36.73
58	SAGBEND	-161.26	-42.34	0.77	264.77	1.100	0.000	241.81	51.52	20.88	79.76	103.01	28.61
59	SEABED	-167.31	-42.39	0.19	270.82	6.209	0.000	241.83	23.49	20.88	36.37	59.68	16.58

S T A T I C P I P E C O O R D I N A T E S, F O R C E S A N D S T R E S S E S

NODE NO.	PIPE SECTION	X COORD (M)	Y COORD (M)	VERT ANGLE (DEG)	PIPE LENGTH (M)	SUPPORT REACTION (KN)	SEPARA -TION (M)	AXIAL TENSION (KN)	BENDING MOMENT (KN-M)	TENSILE STRESS (MPA)	BENDING STRESS (MPA)	TOTAL STRESS (MPA)	PERCNT YIELD (PCT)
60	SEABED	-173.36	-42.40	-0.02	276.87	7.587	0.000	241.84	5.50	20.88	8.52	31.94	8.87
61	SEABED	-179.41	-42.39	-0.05	282.92	6.979	0.000	241.84	-0.75	20.88	-1.16	24.66	6.85
62	SEABED	-185.46	-42.39	-0.03	288.97	6.353	0.000	241.84	-1.45	20.88	-2.25	25.73	7.15
63	SEABED	-191.51	-42.39	-0.01	295.02	6.070	0.000	241.84	-0.77	20.88	-1.20	24.69	6.86
64	SEABED	-197.56	-42.39	0.00	301.07	6.005	0.000	241.84	-0.23	20.88	-0.35	23.86	6.63
65	SEABED	-203.61	-42.39	0.00	307.12	6.014	0.000	241.84	0.00	20.88	0.00	23.52	6.53
66	SEABED	-209.66	-42.39	0.00	313.17	6.032	0.000	241.84	0.04	20.88	0.06	23.57	6.55
67	SEABED	-215.71	-42.39	0.00	319.22	6.041	0.000	241.84	0.02	20.88	0.04	23.55	6.54
68	SEABED	-221.76	-42.39	0.00	325.27	6.044	0.000	241.84	0.01	20.88	0.01	23.52	6.53
69	SEABED	-227.81	-42.39	0.00	331.32	6.044	0.000	241.84	0.00	20.88	0.00	23.51	6.53
70	SEABED	-233.86	-42.39	0.00	337.37	6.044	0.000	241.84	0.00	20.88	0.00	23.51	6.53
71	SEABED	-239.91	-42.39	0.00	343.42	6.043	0.000	241.84	0.00	20.88	0.00	23.51	6.53
72	SEABED	-245.96	-42.39	0.00	349.47	6.043	0.000	241.84	0.00	20.88	0.00	23.51	6.53
73	SEABED	-252.01	-42.39	0.00	355.52	0.000	0.000	241.84	0.00	20.88	0.00	23.51	6.53

S T A T I C P I P E C O O R D I N A T E S, F O R C E S A N D S T R E S S E S

NODE NO.	PIPE SECTION	X COORD (M)	Y COORD (M)	VERT ANGLE (DEG)	PIPE LENGTH (M)	SUPPORT REACTION (KN)	SEPARA -TION (M)	AXIAL TENSION (KN)	BENDING MOMENT (KN-M)	TENSILE STRESS (MPA)	BENDING STRESS (MPA)	TOTAL STRESS (MPA)	PERCNT YIELD (PCT)
1	LAYBARGE	96.31	6.41	1.69	0.00	0.655	0.000	0.00	0.00	0.00	0.00	0.00	0.00
3	LAYBARGE	84.28	6.05	1.70	12.04	1.244	0.000	-0.04	0.00	0.00	0.00	0.00	0.00
5	LAYBARGE	73.45	5.73	1.89	22.87	1.315	0.000	-0.08	0.00	0.00	0.00	0.00	0.00
7	TENSIONR	60.11	5.24	2.20	36.23	1.840	0.000	276.58	0.00	0.00	0.00	0.00	0.00
9	LAYBARGE	51.10	4.88	2.25	45.24	0.000	0.000	276.54	0.00	0.00	0.00	0.00	0.00
10	LAYBARGE	46.45	4.70	2.10	49.89	0.000	0.000	276.52	0.00	0.00	0.00	0.00	0.00
12	LAYBARGE	38.36	4.41	1.97	57.99	0.000	0.000	276.49	0.00	0.00	0.00	0.00	0.00
13	LAYBARGE	35.36	4.31	2.62	60.99	7.503	0.000	276.46	0.00	0.00	0.00	0.00	0.00
15	LAYBARGE	26.35	3.79	3.26	70.02	0.000	0.000	276.43	0.00	0.00	0.00	0.00	0.00
16	LAYBARGE	23.33	3.62	5.29	73.04	21.030	0.000	276.22	0.00	0.00	0.00	0.00	0.00
18	LAYBARGE	11.93	2.14	7.31	84.54	0.000	0.000	276.27	0.00	0.00	0.00	0.00	0.00
19	LAYBARGE	8.89	1.76	8.94	87.60	16.834	0.000	276.10	0.00	0.00	0.00	0.00	0.00
21	LAYBARGE	6.12	1.24	10.62	90.42	0.000	0.000	276.17	0.00	0.00	0.00	0.00	0.00
22	LAYBARGE	3.10	0.67	10.52	93.49	0.000	0.053	276.11	0.00	0.00	0.00	0.00	0.00
24	LAYBARGE	-6.85	-1.16	10.40	103.61	0.000	0.000	275.93	0.00	0.00	0.00	0.00	0.00
27	STINGER	-7.56	-1.29	10.30	104.33	0.000	0.091	275.91	0.00	0.00	0.00	0.00	0.00
29	STINGER	-16.56	-2.92	12.83	113.48	25.733	0.000	275.46	0.00	0.00	0.00	0.00	0.00
32	STINGER	-26.14	-5.56	18.18	123.42	27.441	0.000	275.17	0.00	0.00	0.00	0.00	0.00
34	STINGER	-36.35	-9.47	24.10	134.36	31.014	0.000	274.70	0.00	0.00	0.00	0.00	0.00
36	STINGER	-39.04	-10.86	27.25	137.39	0.000	0.117	274.99	0.00	0.00	0.00	0.00	0.00
38	SAGBEND	-41.38	-12.06	25.48	140.01	0.000	0.000	274.76	0.00	25.77	0.00	26.45	7.35
39	SAGBEND	-44.77	-13.67	25.34	143.77	0.000	0.000	273.13	25.54	25.52	39.54	65.81	18.28
40	SAGBEND	-50.25	-16.23	24.74	149.82	0.000	0.000	270.53	50.19	25.13	77.70	103.71	28.81
41	SAGBEND	-55.76	-18.72	23.85	155.87	0.000	0.000	268.01	63.44	24.74	98.21	123.98	34.44
42	SAGBEND	-61.32	-21.12	22.80	161.92	0.000	0.000	265.59	70.88	24.38	109.73	135.27	37.57
43	SAGBEND	-66.92	-23.41	21.66	167.97	0.000	0.000	263.29	75.34	24.03	116.64	141.94	39.43
44	SAGBEND	-72.56	-25.59	20.47	174.02	0.000	0.000	261.11	78.25	23.69	121.14	146.23	40.62
45	SAGBEND	-78.25	-27.64	19.24	180.07	0.000	0.000	259.05	80.34	23.38	124.37	149.27	41.46
46	SAGBEND	-83.99	-29.57	17.98	186.12	0.000	0.000	257.11	81.97	23.08	126.91	151.61	42.11

47	SAGBEND	-89.76	-31.37	16.70	192.17	0.000	0.000	255.31	83.34	22.81	129.03	153.56	42.65
48	SAGBEND	-95.58	-33.05	15.40	198.22	0.000	0.000	253.63	84.54	22.55	130.88	155.24	43.12
49	SAGBEND	-101.43	-34.59	14.08	204.27	0.000	0.000	252.09	85.60	22.31	132.51	156.73	43.54
50	SAGBEND	-107.31	-35.99	12.74	210.32	0.000	0.000	250.68	86.52	22.10	133.95	158.03	43.90
51	SAGBEND	-113.23	-37.25	11.39	216.37	0.000	0.000	249.42	87.31	21.90	135.17	159.13	44.20
52	SAGBEND	-119.17	-38.38	10.03	222.42	0.000	0.000	248.29	87.92	21.73	136.12	159.97	44.43
53	SAGBEND	-125.14	-39.36	8.67	228.47	0.000	0.000	247.31	88.28	21.58	136.67	160.42	44.56
54	SAGBEND	-131.13	-40.20	7.30	234.52	0.000	0.000	246.47	88.23	21.45	136.60	160.27	44.52
55	SAGBEND	-137.14	-40.90	5.93	240.57	0.000	0.000	245.78	87.52	21.35	135.49	159.09	44.19
56	SAGBEND	-143.17	-41.45	4.59	246.62	0.000	0.000	245.23	85.63	21.26	132.56	156.12	43.37
57	SAGBEND	-149.20	-41.87	3.29	252.67	0.000	0.000	244.83	81.62	21.20	126.36	149.87	41.63
58	SAGBEND	-155.25	-42.15	2.08	258.72	0.000	0.000	244.58	73.71	21.16	114.11	137.61	38.22
59	SAGBEND	-161.29	-42.31	1.04	264.77	0.248	0.000	244.46	58.55	21.14	90.65	114.14	31.71

S T A T I C P I P E C O O R D I N A T E S, F O R C E S A N D S T R E S S E S

NODE NO.	PIPE SECTION	X COORD (M)	Y COORD (M)	VERT ANGLE (DEG)	PIPE LENGTH (M)	SUPPORT REACTION (KN)	SEPARA -TION (M)	AXIAL TENSION (KN)	BENDING MOMENT (KN-M)	TENSILE STRESS (MPA)	BENDING STRESS (MPA)	TOTAL STRESS (MPA)	PERCNT YIELD (PCT)
60	SEABED	-167.34	-42.38	0.32	270.82	4.667	0.000	244.46	32.02	21.14	49.58	73.11	20.31
61	SEABED	-173.39	-42.40	0.02	276.87	7.503	0.000	244.48	9.76	21.14	15.12	38.75	10.76
62	SEABED	-179.44	-42.39	-0.05	282.92	7.216	0.000	244.48	0.40	21.14	0.62	24.37	6.77
63	SEABED	-185.49	-42.39	-0.03	288.97	6.516	0.000	244.48	-1.49	21.14	-2.31	26.04	7.23
64	SEABED	-191.54	-42.39	-0.01	295.02	6.130	0.000	244.48	-1.00	21.14	-1.55	25.30	7.03
65	SEABED	-197.59	-42.39	0.00	301.07	6.013	0.000	244.48	-0.36	21.14	-0.56	24.31	6.75
66	SEABED	-203.64	-42.39	0.00	307.12	6.009	0.000	244.48	-0.05	21.14	-0.07	23.83	6.62
67	SEABED	-209.69	-42.39	0.00	313.17	6.027	0.000	244.48	0.03	21.14	0.05	23.82	6.62
68	SEABED	-215.74	-42.39	0.00	319.22	6.039	0.000	244.48	0.03	21.14	0.05	23.81	6.61
69	SEABED	-221.79	-42.39	0.00	325.27	6.044	0.000	244.48	0.01	21.14	0.02	23.78	6.61
70	SEABED	-227.84	-42.39	0.00	331.32	6.044	0.000	244.48	0.00	21.14	0.00	23.77	6.60
71	SEABED	-233.89	-42.39	0.00	337.37	6.044	0.000	244.48	0.00	21.14	0.00	23.76	6.60
72	SEABED	-239.94	-42.39	0.00	343.42	6.043	0.000	244.48	0.00	21.14	0.00	23.76	6.60
73	SEABED	-245.99	-42.39	0.00	349.47	6.043	0.000	244.48	0.00	21.14	0.00	23.76	6.60
74	SEABED	-252.04	-42.39	0.00	355.52	0.000	0.000	244.48	0.00	21.14	0.00	23.76	6.60

S T A T I C P I P E C O O R D I N A T E S, F O R C E S A N D S T R E S S E S

NODE NO.	PIPE SECTION	X COORD (M)	Y COORD (M)	VERT ANGLE (DEG)	PIPE LENGTH (M)	SUPPORT REACTION (KN)	SEPARA -TION (M)	AXIAL TENSION (KN)	BENDING MOMENT (KN-M)	TENSILE STRESS (MPA)	BENDING STRESS (MPA)	TOTAL STRESS (MPA)	PERCNT YIELD (PCT)
1	LAYBARGE	96.31	6.41	1.69	0.00	0.655	0.000	0.00	0.00	0.00	0.00	0.00	0.00
3	LAYBARGE	84.28	6.05	1.70	12.04	1.244	0.000	-0.04	0.00	0.00	0.00	0.00	0.00
5	LAYBARGE	73.45	5.73	1.89	22.87	1.315	0.000	-0.08	0.00	0.00	0.00	0.00	0.00
7	TENSIONR	60.11	5.24	2.21	36.23	1.705	0.000	200.97	0.00	0.00	0.00	0.00	0.00
9	LAYBARGE	51.10	4.88	2.24	45.24	0.000	0.000	200.93	0.00	0.00	0.00	0.00	0.00
10	LAYBARGE	46.45	4.70	2.09	49.89	0.363	0.000	200.92	0.00	0.00	0.00	0.00	0.00
12	LAYBARGE	38.36	4.41	1.96	57.99	0.000	0.000	200.88	0.00	0.00	0.00	0.00	0.00
13	LAYBARGE	35.36	4.31	2.61	60.99	5.797	0.000	200.86	0.00	0.00	0.00	0.00	0.00
15	LAYBARGE	26.35	3.79	3.25	70.02	0.000	0.000	200.82	0.00	0.00	0.00	0.00	0.00
16	LAYBARGE	23.33	3.62	5.28	73.04	15.671	0.000	200.66	0.00	0.00	0.00	0.00	0.00
18	LAYBARGE	11.93	2.14	7.29	84.54	0.000	0.000	200.66	0.00	0.00	0.00	0.00	0.00
19	LAYBARGE	8.89	1.76	7.86	87.60	5.091	0.000	200.60	0.00	0.00	0.00	0.00	0.00
21	LAYBARGE	6.10	1.34	8.50	90.42	0.000	0.000	200.57	0.00	0.00	0.00	0.00	0.00
22	LAYBARGE	3.07	0.89	8.36	93.48	0.000	0.271	200.52	0.00	0.00	0.00	0.00	0.00
24	LAYBARGE	-6.95	-0.57	8.18	103.61	0.000	0.000	200.37	0.00	0.00	0.00	0.00	0.00
27	STINGER	-7.61	-0.66	8.04	104.28	0.000	0.346	200.37	0.00	0.00	0.00	0.00	0.00
29	STINGER	-16.67	-1.93	11.53	113.43	25.726	0.000	199.83	0.00	0.00	0.00	0.00	0.00
32	STINGER	-26.28	-4.52	19.52	123.39	31.808	0.000	199.37	0.00	0.00	0.00	0.00	0.00
34	STINGER	-36.27	-8.96	28.10	134.33	29.476	0.000	199.02	0.00	0.00	0.00	0.00	0.00
36	STINGER	-38.83	-10.57	32.22	137.36	0.000	0.013	199.41	0.00	0.00	0.00	0.00	0.00
38	SAGBEND	-41.08	-11.99	29.42	140.02	0.000	0.000	199.04	0.00	18.49	0.00	19.17	5.32
39	SAGBEND	-44.36	-13.83	29.26	143.78	0.000	0.000	197.18	30.35	18.20	46.98	65.94	18.32
40	SAGBEND	-49.65	-16.76	28.52	149.83	0.000	0.000	194.19	62.28	17.75	96.42	115.08	31.97
41	SAGBEND	-55.00	-19.60	27.40	155.88	0.000	0.000	191.30	81.54	17.31	126.24	144.62	40.17
42	SAGBEND	-60.40	-22.32	26.03	161.93	0.000	0.000	188.53	93.69	16.89	145.04	163.15	45.32
43	SAGBEND	-65.87	-24.90	24.51	167.98	0.000	0.000	185.91	101.80	16.49	157.60	175.45	48.74
44	SAGBEND	-71.41	-27.33	22.88	174.03	0.000	0.000	183.46	107.58	16.12	166.55	184.16	51.15
45	SAGBEND	-77.02	-29.60	21.18	180.08	0.000	0.000	181.17	111.96	15.77	173.33	190.72	52.98
46	SAGBEND	-82.69	-31.70	19.42	186.13	0.000	0.000	179.05	115.45	15.44	178.73	195.91	54.42
47	SAGBEND	-88.43	-33.62	17.60	192.18	0.000	0.000	177.12	118.30	15.15	183.14	200.13	55.59
48	SAGBEND	-94.22	-35.36	15.75	198.23	0.000	0.000	175.37	120.60	14.88	186.70	203.52	56.53
49	SAGBEND	-100.07	-36.91	13.86	204.28	0.000	0.000	173.82	122.34	14.65	189.40	206.07	57.24
50	SAGBEND	-105.97	-38.26	11.96	210.33	0.000	0.000	172.46	123.40	14.44	191.05	207.58	57.66
51	SAGBEND	-111.91	-39.41	10.04	216.38	0.000	0.000	171.31	123.54	14.26	191.25	207.68	57.69
52	SAGBEND	-117.88	-40.37	8.13	222.43	0.000	0.000	170.36	122.30	14.12	189.34	205.68	57.13
53	SAGBEND	-123.88	-41.13	6.26	228.48	0.000	0.000	169.62	118.96	14.00	184.17	200.43	55.67
54	SAGBEND	-129.91	-41.69	4.46	234.53	0.000	0.000	169.10	112.25	13.92	173.78	189.99	52.77
55	SAGBEND	-135.94	-42.07	2.80	240.58	0.000	0.000	168.77	100.05	13.87	154.90	171.08	47.52
56	SAGBEND	-141.99	-42.29	1.40	246.63	0.148	0.000	168.64	78.79	13.84	121.99	138.17	38.38
57	SEABED	-148.04	-42.38	0.43	252.68	4.773	0.000	168.66	43.90	13.84	67.96	84.19	23.38
58	SEABED	-154.09	-42.40	0.01	258.73	8.325	0.000	168.70	13.29	13.84	20.58	36.93	10.26
59	SEABED	-160.14	-42.40	-0.07	264.78	7.747	0.000	168.70	0.19	13.84	0.30	16.90	4.69

S T A T I C P I P E C O O R D I N A T E S, F O R C E S A N D S T R E S S E S

NODE NO.	PIPE SECTION	X COORD (M)	Y COORD (M)	VERT ANGLE (DEG)	PIPE LENGTH (M)	SUPPORT REACTION (KN)	SEPARA -TION (M)	AXIAL TENSION (KN)	BENDING MOMENT (KN-M)	TENSILE STRESS (MPA)	BENDING STRESS (MPA)	TOTAL STRESS (MPA)	PERCNT YIELD (PCT)
60	SEABED	-166.19	-42.39	-0.05	270.83	6.686	0.000	168.70	-2.34	13.84	-3.62	20.15	5.60
61	SEABED	-172.24	-42.39	-0.02	276.88	6.130	0.000	168.70	-1.50	13.84	-2.32	18.87	5.24
62	SEABED	-178.29	-42.39	0.00	282.93	5.979	0.000	168.70	-0.50	13.84	-0.78	17.37	4.82
63	SEABED	-184.34	-42.39	0.00	288.98	5.987	0.000	168.70	-0.04	13.84	-0.06	16.67	4.63
64	SEABED	-190.39	-42.39	0.00	295.03	6.020	0.000	168.70	0.07	13.84	0.11	16.72	4.64
65	SEABED	-196.44	-42.39	0.00	301.08	6.039	0.000	168.70	0.05	13.84	0.08	16.69	4.64
66	SEABED	-202.49	-42.39	0.00	307.13	6.045	0.000	168.70	0.02	13.84	0.03	16.64	4.62
67	SEABED	-208.54	-42.39	0.00	313.18	6.045	0.000	168.70	0.00	13.84	0.00	16.62	4.62
68	SEABED	-214.59	-42.39	0.00	319.23	6.044	0.000	168.70	0.00	13.84	0.00	16.62	4.62
69	SEABED	-220.64	-42.39	0.00	325.28	6.044	0.000	168.70	0.00	13.84	0.00	16.61	4.62
70	SEABED	-226.69	-42.39	0.00	331.33	6.043	0.000	168.70	0.00	13.84	0.00	16.61	4.61
71	SEABED	-232.74	-42.39	0.00	337.38	0.000	0.000	168.70	0.00	13.84	0.00	16.61	4.61

S T A T I C P I P E C O O R D I N A T E S, F O R C E S A N D S T R E S S E S

NODE NO.	PIPE SECTION	X COORD (M)	Y COORD (M)	VERT ANGLE (DEG)	PIPE LENGTH (M)	SUPPORT REACTION (KN)	SEPARA -TION (M)	AXIAL TENSION (KN)	BENDING MOMENT (KN-M)	TENSILE STRESS (MPA)	BENDING STRESS (MPA)	TOTAL STRESS (MPA)	PERCNT YIELD (PCT)
1	LAYBARGE	96.31	6.41	1.69	0.00	0.655	0.000	0.00	0.00	0.00	0.00	0.00	0.00
3	LAYBARGE	84.28	6.05	1.70	12.04	1.244	0.000	-0.04	0.00	0.00	0.00	0.00	0.00
5	LAYBARGE	73.45	5.73	1.89	22.87	1.315	0.000	-0.08	0.00	0.00	0.00	0.00	0.00
7	TENSIONR	60.11	5.24	2.21	36.23	1.705	0.000	200.97	0.00	0.00	0.00	0.00	0.00
9	LAYBARGE	51.10	4.88	2.24	45.24	0.000	0.000	200.93	0.00	0.00	0.00	0.00	0.00
10	LAYBARGE	46.45	4.70	2.09	49.89	0.363	0.000	200.92	0.00	0.00	0.00	0.00	0.00
12	LAYBARGE	38.36	4.41	1.96	57.99	0.000	0.000	200.88	0.00	0.00	0.00	0.00	0.00
13	LAYBARGE	35.36	4.31	2.61	60.99	5.794	0.000	200.86	0.00	0.00	0.00	0.00	0.00
15	LAYBARGE	26.35	3.79	3.25	70.02	0.000	0.000	200.82	0.00	0.00	0.00	0.00	0.00
16	LAYBARGE	23.33	3.62	4.38	73.04	9.383	0.000	200.75	0.00	0.00	0.00	0.00	0.00
18	LAYBARGE	11.89	2.50	5.49	84.54	0.000	0.000	200.69	0.00	0.00	0.00	0.00	0.00
19	LAYBARGE	8.84	2.21	5.34	87.60	0.000	0.457	200.66	0.00	0.00	0.00	0.00	0.00
21	LAYBARGE	6.03	1.95	5.25	90.42	0.000	0.000	200.63	0.00	0.00	0.00	0.00	0.00
22	LAYBARGE	3.00	1.68	5.10	93.46	0.000	1.061	200.60	0.00	0.00	0.00	0.00	0.00
24	LAYBARGE	-7.08	0.79	4.92	103.59	0.000	0.000	200.51	0.00	0.00	0.00	0.00	0.00
27	STINGER	-7.52	0.76	4.76	104.03	0.000	1.023	200.50	0.00	0.00	0.00	0.00	0.00
29	STINGER	-16.57	0.02	5.59	113.11	7.296	0.000	200.39	0.00	0.00	0.00	0.00	0.00
32	STINGER	-26.51	-1.12	10.43	123.11	28.460	0.000	199.81	0.00	0.00	0.00	0.00	0.00
34	STINGER	-37.10	-3.83	18.65	134.05	30.508	0.000	199.46	0.00	0.00	0.00	0.00	0.00
36	STINGER	-39.89	-5.01	22.96	137.08	0.592	0.000	199.92	0.00	0.00	0.00	0.00	0.00
38	SAGBEND	-46.05	-7.62	22.91	143.77	0.000	0.000	199.67	0.00	0.00	0.00	0.00	0.00
39	SAGBEND	-51.62	-9.97	22.76	149.82	0.000	0.000	199.45	0.00	0.00	0.00	0.00	0.00
40	SAGBEND	-57.20	-12.30	22.61	155.87	0.000	0.000	199.23	0.00	0.00	0.00	0.00	0.00
41	SAGBEND	-62.79	-14.62	22.46	161.92	0.000	0.000	199.01	0.00	0.00	0.00	0.00	0.00
42	SAGBEND	-68.39	-16.93	22.30	167.97	0.000	0.000	198.80	0.00	0.00	0.00	0.00	0.00
43	SAGBEND	-73.99	-19.21	22.15	174.02	0.000	0.000	198.58	0.00	0.00	0.00	0.00	0.00
44	SAGBEND	-79.59	-21.49	22.00	180.07	0.000	0.000	198.37	0.00	0.00	0.00	0.00	0.00
45	SAGBEND	-85.21	-23.75	21.84	186.12	0.000	0.000	198.15	0.00	0.00	0.00	0.00	0.00
46	SAGBEND	-90.82	-25.99	21.69	192.17	0.000	0.000	197.94	0.00	0.00	0.00	0.00	0.00

47	SAGBEND	-94.47	-27.44	21.59	196.09	0.000	0.000	197.80	0.00	0.00	0.00	0.00	0.00
48	SAGBEND	-98.12	-28.88	18.51	200.02	0.000	0.000	197.40	0.00	17.37	0.00	19.12	5.31
49	SAGBEND	-102.15	-30.22	18.30	204.27	0.000	0.000	196.03	36.19	17.16	56.03	74.88	20.80
50	SAGBEND	-107.91	-32.08	17.47	210.32	0.000	0.000	194.09	68.68	16.87	106.33	124.97	34.71
51	SAGBEND	-113.70	-33.84	16.24	216.37	0.000	0.000	192.27	87.76	16.60	135.86	154.32	42.87
52	SAGBEND	-119.53	-35.46	14.78	222.42	0.000	0.000	190.60	99.16	16.34	153.51	171.81	47.72
53	SAGBEND	-125.40	-36.92	13.19	228.47	0.000	0.000	189.11	106.05	16.12	164.18	182.32	50.65
54	SAGBEND	-131.31	-38.22	11.51	234.52	0.000	0.000	187.80	110.11	15.92	170.47	188.49	52.36
55	SAGBEND	-137.25	-39.34	9.78	240.57	0.000	0.000	186.67	112.17	15.75	173.66	191.57	53.21
56	SAGBEND	-143.23	-40.27	8.04	246.62	0.000	0.000	185.73	112.46	15.60	174.10	191.91	53.31
57	SAGBEND	-149.23	-41.03	6.30	252.67	0.000	0.000	184.99	110.70	15.49	171.38	189.12	52.53
58	SAGBEND	-155.26	-41.60	4.62	258.72	0.000	0.000	184.44	106.07	15.40	164.21	181.90	50.53
59	SAGBEND	-161.29	-42.01	3.04	264.77	0.000	0.000	184.07	96.93	15.34	150.07	167.73	46.59
60	SAGBEND	-167.34	-42.25	1.65	270.82	0.008	0.000	183.90	80.33	15.31	124.37	142.02	39.45

S T A T I C P I P E C O O R D I N A T E S, F O R C E S A N D S T R E S S E S

NODE NO.	PIPE SECTION	X COORD (M)	Y COORD (M)	VERT ANGLE (DEG)	PIPE LENGTH (M)	SUPPORT REACTION (KN)	SEPARA -TION (M)	AXIAL TENSION (KN)	BENDING MOMENT (KN-M)	TENSILE STRESS (MPA)	BENDING STRESS (MPA)	TOTAL STRESS (MPA)	PERCNT YIELD (PCT)
61	SEABED	-173.39	-42.37	0.61	276.87	2.899	0.000	183.87	51.22	15.30	79.29	96.96	26.93
62	SEABED	-179.44	-42.40	0.08	282.92	7.764	0.000	183.92	18.80	15.31	29.11	46.88	13.02
63	SEABED	-185.49	-42.40	-0.06	288.97	7.893	0.000	183.92	2.35	15.31	3.64	21.61	6.00
64	SEABED	-191.54	-42.39	-0.05	295.02	6.883	0.000	183.92	-1.98	15.31	-3.07	21.04	5.84
65	SEABED	-197.59	-42.39	-0.02	301.07	6.229	0.000	183.92	-1.67	15.31	-2.58	20.57	5.71
66	SEABED	-203.64	-42.39	0.00	307.12	6.005	0.000	183.92	-0.68	15.31	-1.05	19.07	5.30
67	SEABED	-209.69	-42.39	0.00	313.17	5.985	0.000	183.92	-0.12	15.31	-0.18	18.22	5.06
68	SEABED	-215.74	-42.39	0.00	319.22	6.014	0.000	183.92	0.05	15.31	0.08	18.12	5.03
69	SEABED	-221.79	-42.39	0.00	325.27	6.036	0.000	183.92	0.05	15.31	0.08	18.12	5.03
70	SEABED	-227.84	-42.39	0.00	331.32	6.044	0.000	183.92	0.02	15.31	0.04	18.08	5.02
71	SEABED	-233.89	-42.39	0.00	337.37	6.045	0.000	183.92	0.01	15.31	0.01	18.05	5.01
72	SEABED	-239.94	-42.39	0.00	343.42	6.044	0.000	183.92	0.00	15.31	0.00	18.04	5.01
73	SEABED	-245.99	-42.39	0.00	349.47	6.044	0.000	183.92	0.00	15.31	0.00	18.04	5.01
74	SEABED	-252.04	-42.39	0.00	355.52	6.043	0.000	183.92	0.00	15.31	0.00	18.04	5.01
75	SEABED	-258.09	-42.39	0.00	361.57	6.043	0.000	183.92	0.00	15.31	0.00	18.04	5.01
76	SEABED	-264.14	-42.39	0.00	367.62	6.043	0.000	183.92	0.00	15.31	0.00	18.04	5.01
77	SEABED	-270.19	-42.39	0.00	373.67	6.043	0.000	183.92	0.00	15.31	0.00	18.04	5.01
78	SEABED	-276.24	-42.39	0.00	379.72	6.043	0.000	183.92	0.00	15.31	0.00	18.04	5.01
79	SEABED	-282.29	-42.39	0.00	385.77	6.043	0.000	183.92	0.00	15.31	0.00	18.04	5.01
80	SEABED	-288.34	-42.39	0.00	391.82	6.043	0.000	183.92	0.00	15.31	0.00	18.04	5.01
81	SEABED	-294.39	-42.39	0.00	397.87	6.043	0.000	183.92	0.00	15.31	0.00	18.04	5.01
82	SEABED	-300.44	-42.39	0.00	403.92	6.043	0.000	183.92	0.00	15.31	0.00	18.04	5.01
83	SEABED	-306.49	-42.39	0.00	409.97	6.043	0.000	183.92	0.00	15.31	0.00	18.04	5.01
84	SEABED	-312.54	-42.39	0.00	416.02	6.043	0.000	183.92	0.00	15.31	0.00	18.04	5.01
85	SEABED	-318.59	-42.39	0.00	422.07	6.043	0.000	183.92	0.00	15.31	0.00	18.04	5.01
86	SEABED	-324.64	-42.39	0.00	428.12	6.043	0.000	183.92	0.00	15.31	0.00	18.04	5.01
87	SEABED	-330.69	-42.39	0.00	434.17	6.043	0.000	183.92	0.00	15.31	0.00	18.04	5.01
88	SEABED	-336.74	-42.39	0.00	440.22	6.043	0.000	183.92	0.00	15.31	0.00	18.04	5.01
89	SEABED	-342.79	-42.39	0.00	446.27	6.043	0.000	183.92	0.00	15.31	0.00	18.04	5.01
90	SEABED	-348.84	-42.39	0.00	452.32	6.043	0.000	183.92	0.00	15.31	0.00	18.04	5.01
91	SEABED	-354.89	-42.39	0.00	458.37	6.043	0.000	183.92	0.00	15.31	0.00	18.04	5.01
92	SEABED	-360.94	-42.39	0.00	464.42	6.043	0.000	183.92	0.00	15.31	0.00	18.04	5.01
93	SEABED	-366.99	-42.39	0.00	470.47	6.043	0.000	183.92	0.00	15.31	0.00	18.04	5.01
94	SEABED	-373.04	-42.39	0.00	476.52	6.043	0.000	183.92	0.00	15.31	0.00	18.04	5.01
95	SEABED	-379.09	-42.39	0.00	482.57	6.043	0.000	183.92	0.00	15.31	0.00	18.04	5.01
96	SEABED	-385.14	-42.39	0.00	488.62	6.043	0.000	183.92	0.00	15.31	0.00	18.04	5.01
97	SEABED	-391.19	-42.39	0.00	494.67	6.043	0.000	183.92	0.00	15.31	0.00	18.04	5.01
98	SEABED	-397.24	-42.39	0.00	500.72	6.043	0.000	183.92	0.00	15.31	0.00	18.04	5.01
99	SEABED	-403.29	-42.39	0.00	506.77	6.043	0.000	183.92	0.00	15.31	0.00	18.04	5.01
100	SEABED	-409.34	-42.39	0.00	512.82	6.043	0.000	183.92	0.00	15.31	0.00	18.04	5.01
101	SEABED	-415.39	-42.39	0.00	518.87	6.043	0.000	183.92	0.00	15.31	0.00	18.04	5.01
102	SEABED	-421.44	-42.39	0.00	524.92	6.043	0.000	183.92	0.00	15.31	0.00	18.04	5.01
103	SEABED	-427.49	-42.39	0.00	530.97	6.043	0.000	183.92	0.00	15.31	0.00	18.04	5.01
104	SEABED	-433.54	-42.39	0.00	537.02	6.043	0.000	183.92	0.00	15.31	0.00	18.04	5.01
105	SEABED	-439.59	-42.39	0.00	543.07	6.043	0.000	183.92	0.00	15.31	0.00	18.04	5.01

S T A T I C P I P E C O O R D I N A T E S, F O R C E S A N D S T R E S S E S

NODE NO.	PIPE SECTION	X COORD (M)	Y COORD (M)	VERT ANGLE (DEG)	PIPE LENGTH (M)	SUPPORT REACTION (KN)	SEPARA -TION (M)	AXIAL TENSION (KN)	BENDING MOMENT (KN-M)	TENSILE STRESS (MPA)	BENDING STRESS (MPA)	TOTAL STRESS (MPA)	PERCNT YIELD (PCT)
106	SEABED	-445.64	-42.39	0.00	549.12	6.043	0.000	183.92	0.00	15.31	0.00	18.04	5.01
107	SEABED	-451.69	-42.39	0.00	555.17	6.043	0.000	183.92	0.00	15.31	0.00	18.04	5.01
108	SEABED	-457.74	-42.39	0.00	561.22	6.043	0.000	183.92	0.00	15.31	0.00	18.04	5.01
109	SEABED	-463.79	-42.39	0.00	567.27	6.043	0.000	183.92	0.00	15.31	0.00	18.04	5.01
110	SEABED	-469.84	-42.39	0.00	573.32	6.043	0.000	183.92	0.00	15.31	0.00	18.04	5.01
111	SEABED	-475.89	-42.39	0.00	579.37	6.043	0.000	183.92	0.00	15.31	0.00	18.04	5.01
112	SEABED	-481.94	-42.39	0.00	585.42	6.043	0.000	183.92	0.00	15.31	0.00	18.04	5.01
113	SEABED	-487.99	-42.39	0.00	591.47	6.043	0.000	183.92	0.00	15.31	0.00	18.04	5.01
114	SEABED	-494.04	-42.39	0.00	597.52	6.043	0.000	183.92	0.00	15.31	0.00	18.04	5.01
115	SEABED	-500.09	-42.39	0.00	603.57	6.043	0.000	183.92	0.00	15.31	0.00	18.04	5.01
116	SEABED	-506.14	-42.39	0.00	609.62	6.043	0.000	183.92	0.00	15.31	0.00	18.04	5.01
117	SEABED	-512.19	-42.39	0.00	615.67	6.043	0.000	183.92	0.00	15.31	0.00	18.04	5.01
118	SEABED	-518.24	-42.39	0.00	621.72	0.000	0.000	183.92	0.00	15.31	0.00	18.04	5.01

S T A T I C P I P E C O O R D I N A T E S, F O R C E S A N D S T R E S S E S

NODE NO.	PIPE SECTION	X COORD (M)	Y COORD (M)	VERT ANGLE (DEG)	PIPE LENGTH (M)	SUPPORT REACTION (KN)	SEPARA -TION (M)	AXIAL TENSION (KN)	BENDING MOMENT (KN-M)	TENSILE STRESS (MPA)	BENDING STRESS (MPA)	TOTAL STRESS (MPA)	PERCNT YIELD (PCT)
1	LAYBARGE	96.31	6.41	1.69	0.00	0.655	0.000	0.00	0.00	0.00	0.00	0.00	0.00
3	LAYBARGE	84.28	6.05	1.70	12.04	1.244	0.000	-0.04	0.00	0.00	0.00	0.00	0.00
5	LAYBARGE	73.45	5.73	1.89	22.87	1.315	0.000	-0.08	0.00	0.00	0.00	0.00	0.00
7	TENSIONR	60.11	5.24	2.24	36.23	1.557	0.000	118.57	0.00	0.00	0.00	0.00	0.00
9	LAYBARGE	51.10	4.87	2.22	45.24	0.000	0.000	118.53	0.00	0.00	0.00	0.00	0.00
10	LAYBARGE	46.45	4.70	2.06	49.89	0.766	0.000	118.52	0.00	0.00	0.00	0.00	0.00
12	LAYBARGE	38.36	4.41	1.93	57.99	0.000	0.000	118.48	0.00	0.00	0.00	0.00	0.00
13	LAYBARGE	35.36	4.31	2.58	60.99	3.933	0.000	118.46	0.00	0.00	0.00	0.00	0.00
15	LAYBARGE	26.35	3.78	3.21	70.02	0.000	0.000	118.42	0.00	0.00	0.00	0.00	0.00
16	LAYBARGE	23.33	3.62	4.47	73.04	6.640	0.000	118.36	0.00	0.00	0.00	0.00	0.00
18	LAYBARGE	11.89	2.44	5.70	84.54	0.000	0.000	118.29	0.00	0.00	0.00	0.00	0.00
19	LAYBARGE	8.84	2.15	5.43	87.60	0.000	0.393	118.26	0.00	0.00	0.00	0.00	0.00
21	LAYBARGE	6.04	1.89	5.28	90.42	0.000	0.000	118.23	0.00	0.00	0.00	0.00	0.00
22	LAYBARGE	3.02	1.61	5.03	93.45	0.000	0.994	118.20	0.00	0.00	0.00	0.00	0.00
24	LAYBARGE	-7.07	0.75	4.72	103.57	0.000	0.000	118.11	0.00	0.00	0.00	0.00	0.00
27	STINGER	-7.51	0.72	4.45	104.02	0.000	0.977	118.10	0.00	0.00	0.00	0.00	0.00
29	STINGER	-16.57	0.03	4.78	113.11	2.844	0.000	118.02	0.00	0.00	0.00	0.00	0.00
32	STINGER	-26.50	-0.88	8.61	123.08	14.854	0.000	117.71	0.00	0.00	0.00	0.00	0.00
34	STINGER	-37.20	-3.15	16.27	134.02	18.217	0.000	117.36	0.00	0.00	0.00	0.00	0.00
36	STINGER	-40.03	-4.21	24.09	137.05	14.878	0.000	117.37	0.00	0.00	0.00	0.00	0.00
38	SAGBEND	-45.98	-7.33	27.49	143.77	0.000	0.000	117.31	0.00	0.00	0.00	0.00	0.00
39	SAGBEND	-51.36	-10.11	27.24	149.82	0.000	0.000	117.05	0.00	0.00	0.00	0.00	0.00
40	SAGBEND	-56.74	-12.86	26.99	155.87	0.000	0.000	116.79	0.00	0.00	0.00	0.00	0.00
41	SAGBEND	-62.14	-15.60	26.74	161.92	0.000	0.000	116.53	0.00	0.00	0.00	0.00	0.00
42	SAGBEND	-67.55	-18.31	26.48	167.97	0.000	0.000	116.28	0.00	0.00	0.00	0.00	0.00
43	SAGBEND	-72.97	-20.99	26.23	174.02	0.000	0.000	116.02	0.00	0.00	0.00	0.00	0.00
44	SAGBEND	-78.40	-23.65	25.98	180.07	0.000	0.000	115.77	0.00	0.00	0.00	0.00	0.00
45	SAGBEND	-83.85	-26.29	25.72	186.12	0.000	0.000	115.52	0.00	0.00	0.00	0.00	0.00
46	SAGBEND	-89.30	-28.91	25.47	192.17	0.000	0.000	115.27	0.00	0.00	0.00	0.00	0.00
47	SAGBEND	-92.85	-30.59	25.30	196.09	0.000	0.000	115.12	0.00	0.00	0.00	0.00	0.00
48	SAGBEND	-96.40	-32.26	18.43	200.02	0.000	0.000	114.17	0.00	9.17	0.00	11.32	3.14
49	SAGBEND	-100.44	-33.60	18.15	204.27	0.000	0.000	112.78	49.33	8.96	76.38	87.20	24.22
50	SAGBEND	-106.20	-35.43	16.98	210.32	0.000	0.000	110.79	98.26	8.66	152.12	162.73	45.20
51	SAGBEND	-112.01	-37.11	15.19	216.37	0.000	0.000	108.95	129.75	8.39	200.88	211.30	58.69
52	SAGBEND	-117.88	-38.59	13.02	222.42	0.000	0.000	107.35	148.92	8.15	230.56	240.82	66.89
53	SAGBEND	-123.80	-39.83	10.62	228.47	0.000	0.000	106.05	158.52	7.95	245.41	255.55	70.99
54	SAGBEND	-129.77	-40.81	8.14	234.52	0.000	0.000	105.06	159.60	7.80	247.09	257.12	71.42
55	SAGBEND	-135.77	-41.54	5.71	240.57	0.000	0.000	104.38	151.83	7.70	235.06	245.03	68.06
56	SAGBEND	-141.81	-42.02	3.49	246.62	0.000	0.000	104.02	133.51	7.63	206.69	216.63	60.17
57	SAGBEND	-147.85	-42.29	1.64	252.67	0.321	0.000	103.92	101.24	7.61	156.74	166.68	46.30
58	SEABED	-153.90	-42.39	0.44	258.72	6.363	0.000	104.01	52.26	7.61	80.90	90.89	25.25
59	SEABED	-159.95	-42.41	-0.04	264.77	9.564	0.000	104.08	13.62	7.62	21.08	31.25	8.68

S T A T I C P I P E C O O R D I N A T E S, F O R C E S A N D S T R E S S E S

NODE NO.	PIPE SECTION	X COORD (M)	Y COORD (M)	VERT ANGLE (DEG)	PIPE LENGTH (M)	SUPPORT REACTION (KN)	SEPARA -TION (M)	AXIAL TENSION (KN)	BENDING MOMENT (KN-M)	TENSILE STRESS (MPA)	BENDING STRESS (MPA)	TOTAL STRESS (MPA)	PERCNT YIELD (PCT)

60	SEABED	-166.00	-42.40	-0.11	270.82	8.207	0.000	104.07	-1.47	7.62	-2.28	12.82	3.56
61	SEABED	-172.05	-42.39	-0.06	276.87	6.723	0.000	104.07	-3.52	7.62	-5.44	15.86	4.40
62	SEABED	-178.10	-42.39	-0.02	282.92	6.055	0.000	104.07	-1.91	7.62	-2.96	13.47	3.74
63	SEABED	-184.15	-42.39	0.00	288.97	5.921	0.000	104.07	-0.52	7.62	-0.81	11.43	3.18
64	SEABED	-190.20	-42.39	0.00	295.02	5.965	0.000	104.07	0.04	7.62	0.06	10.73	2.98
65	SEABED	-196.25	-42.39	0.00	301.07	6.018	0.000	104.07	0.12	7.62	0.19	10.85	3.01
66	SEABED	-202.30	-42.39	0.00	307.12	6.043	0.000	104.07	0.07	7.62	0.11	10.77	2.99
67	SEABED	-208.35	-42.39	0.00	313.17	6.048	0.000	104.07	0.02	7.62	0.03	10.70	2.97
68	SEABED	-214.40	-42.39	0.00	319.22	6.046	0.000	104.07	0.00	7.62	0.00	10.67	2.97
69	SEABED	-220.45	-42.39	0.00	325.27	6.045	0.000	104.07	0.00	7.62	-0.01	10.68	2.97
70	SEABED	-226.50	-42.39	0.00	331.32	6.044	0.000	104.07	0.00	7.62	0.00	10.68	2.97
71	SEABED	-232.55	-42.39	0.00	337.37	6.043	0.000	104.07	0.00	7.62	0.00	10.67	2.97
72	SEABED	-238.60	-42.39	0.00	343.42	6.044	0.000	104.07	0.00	7.62	0.00	10.67	2.96
73	SEABED	-244.65	-42.39	0.00	349.47	6.044	0.000	104.07	0.00	7.62	0.00	10.67	2.96
74	SEABED	-250.70	-42.39	0.00	355.52	6.044	0.000	104.07	0.00	7.62	0.00	10.67	2.96
75	SEABED	-256.75	-42.39	0.00	361.57	6.044	0.000	104.07	0.00	7.62	0.00	10.67	2.96
76	SEABED	-262.80	-42.39	0.00	367.62	6.044	0.000	104.07	0.00	7.62	0.00	10.67	2.96
77	SEABED	-268.85	-42.39	0.00	373.67	6.044	0.000	104.07	0.00	7.62	0.00	10.67	2.96
78	SEABED	-274.90	-42.39	0.00	379.72	6.044	0.000	104.07	0.00	7.62	0.00	10.67	2.96
79	SEABED	-280.95	-42.39	0.00	385.77	6.044	0.000	104.07	0.00	7.62	0.00	10.67	2.96
80	SEABED	-287.00	-42.39	0.00	391.82	6.044	0.000	104.07	0.00	7.62	0.00	10.67	2.96
81	SEABED	-293.05	-42.39	0.00	397.88	6.044	0.000	104.07	0.00	7.62	0.00	10.67	2.96
82	SEABED	-299.10	-42.39	0.00	403.93	6.044	0.000	104.07	0.00	7.62	0.00	10.67	2.96
83	SEABED	-305.15	-42.39	0.00	409.98	6.044	0.000	104.07	0.00	7.62	0.00	10.67	2.96
84	SEABED	-311.20	-42.39	0.00	416.03	6.044	0.000	104.07	0.00	7.62	0.00	10.67	2.96
85	SEABED	-317.25	-42.39	0.00	422.08	6.044	0.000	104.07	0.00	7.62	0.00	10.67	2.96
86	SEABED	-323.30	-42.39	0.00	428.13	6.044	0.000	104.07	0.00	7.62	0.00	10.67	2.96
87	SEABED	-329.35	-42.39	0.00	434.18	6.044	0.000	104.07	0.00	7.62	0.00	10.67	2.96
88	SEABED	-335.40	-42.39	0.00	440.23	6.044	0.000	104.07	0.00	7.62	0.00	10.67	2.96
89	SEABED	-341.45	-42.39	0.00	446.28	6.044	0.000	104.07	0.00	7.62	0.00	10.67	2.96
90	SEABED	-347.50	-42.39	0.00	452.33	6.044	0.000	104.07	0.00	7.62	0.00	10.67	2.96
91	SEABED	-353.55	-42.39	0.00	458.38	6.044	0.000	104.07	0.00	7.62	0.00	10.67	2.96
92	SEABED	-359.60	-42.39	0.00	464.43	6.044	0.000	104.07	0.00	7.62	0.00	10.67	2.96
93	SEABED	-365.65	-42.39	0.00	470.48	6.044	0.000	104.07	0.00	7.62	0.00	10.67	2.96
94	SEABED	-371.70	-42.39	0.00	476.53	6.044	0.000	104.07	0.00	7.62	0.00	10.67	2.96
95	SEABED	-377.75	-42.39	0.00	482.58	6.044	0.000	104.07	0.00	7.62	0.00	10.67	2.96
96	SEABED	-383.80	-42.39	0.00	488.63	6.044	0.000	104.07	0.00	7.62	0.00	10.67	2.96
97	SEABED	-389.85	-42.39	0.00	494.68	6.044	0.000	104.07	0.00	7.62	0.00	10.67	2.96
98	SEABED	-395.90	-42.39	0.00	500.73	6.044	0.000	104.07	0.00	7.62	0.00	10.67	2.96
99	SEABED	-401.95	-42.39	0.00	506.78	6.044	0.000	104.07	0.00	7.62	0.00	10.67	2.96
100	SEABED	-408.00	-42.39	0.00	512.83	0.000	0.000	104.07	0.00	7.62	0.00	10.67	2.96

S T A T I C P I P E C O O R D I N A T E S, F O R C E S A N D S T R E S S E S

NODE NO.	PIPE SECTION	X COORD (M)	Y COORD (M)	VERT ANGLE (DEG)	PIPE LENGTH (M)	SUPPORT REACTION (KN)	SEPARA -TION (M)	AXIAL TENSION (KN)	BENDING MOMENT (KN-M)	TENSILE STRESS (MPA)	BENDING STRESS (MPA)	TOTAL STRESS (MPA)	PERCNT YIELD (PCT)
1	LAYBARGE	96.31	6.41	1.69	0.00	0.655	0.000	0.00	0.00	0.00	0.00	0.00	0.00
3	LAYBARGE	84.28	6.05	1.70	12.04	1.244	0.000	-0.04	0.00	0.00	0.00	0.00	0.00
5	LAYBARGE	73.45	5.73	1.89	22.87	1.315	0.000	-0.08	0.00	0.00	0.00	0.00	0.00
7	TENSIONR	60.11	5.24	2.24	36.23	1.546	0.000	107.12	0.00	0.00	0.00	0.00	0.00
9	LAYBARGE	51.10	4.87	2.21	45.24	0.000	0.000	107.08	0.00	0.00	0.00	0.00	0.00
10	LAYBARGE	46.45	4.70	2.05	49.89	0.810	0.000	107.06	0.00	0.00	0.00	0.00	0.00
12	LAYBARGE	38.37	4.41	1.92	57.98	0.000	0.000	107.03	0.00	0.00	0.00	0.00	0.00
13	LAYBARGE	35.36	4.31	2.57	60.99	3.704	0.000	107.01	0.00	0.00	0.00	0.00	0.00
15	LAYBARGE	26.35	3.78	3.20	70.01	0.000	0.000	106.97	0.00	0.00	0.00	0.00	0.00
16	LAYBARGE	23.34	3.62	3.83	73.03	27.468	0.000	135.46	0.00	0.00	0.00	0.00	0.00
18	LAYBARGE	11.87	2.70	4.41	84.54	0.000	0.000	135.45	0.00	0.00	0.00	0.00	0.00
19	LAYBARGE	8.84	2.47	4.12	87.58	0.000	0.717	135.46	0.00	0.00	0.00	0.00	0.00
21	LAYBARGE	6.02	2.28	3.95	90.40	0.000	0.000	135.46	0.00	0.00	0.00	0.00	0.00
22	LAYBARGE	2.98	2.07	3.68	93.45	0.000	1.454	135.50	0.00	0.00	0.00	0.00	0.00
24	LAYBARGE	-7.13	1.45	3.33	103.58	0.000	0.000	135.48	0.00	0.00	0.00	0.00	0.00
27	STINGER	-7.61	1.43	3.03	104.06	0.000	1.338	137.08	0.00	0.00	0.00	0.00	0.00
29	STINGER	-16.70	0.97	2.08	113.16	-1393.873	0.000	315.36	0.00	0.00	0.00	0.00	0.00
32	STINGER	-26.60	0.75	4.59	123.07	-3901.395	0.000	684.09	0.00	0.00	0.00	0.00	0.00
34	STINGER	-37.48	-0.76	12.33	134.06	-5947.639	0.000	657.66	0.00	0.00	0.00	0.00	0.00
36	STINGER	-40.40	-1.64	17.57	137.11	-2749.401	0.000	120.62	0.00	0.00	0.00	0.00	0.00
38	SAGBEND	-46.80	-3.76	18.23	143.86	0.000	0.000	120.23	0.00	0.00	0.00	0.00	0.00
39	SAGBEND	-52.55	-5.64	17.95	149.91	0.000	0.000	120.11	0.03	0.00	0.00	0.00	0.00
40	SAGBEND	-58.32	-7.49	17.67	155.96	0.000	0.000	120.00	0.03	0.00	0.00	0.00	0.00
41	SAGBEND	-64.08	-9.31	17.38	162.01	0.000	0.000	119.89	0.03	0.00	0.00	0.00	0.00
42	SAGBEND	-69.86	-11.11	17.10	168.06	0.000	0.000	119.78	0.03	0.00	0.00	0.00	0.00
43	SAGBEND	-75.65	-12.87	16.81	174.11	0.000	0.000	119.67	0.03	0.00	0.00	0.00	0.00
44	SAGBEND	-81.45	-14.61	16.52	180.16	0.000	0.000	119.56	0.03	0.00	0.00	0.00	0.00
45	SAGBEND	-87.25	-16.31	16.24	186.21	0.000	0.000	119.46	0.03	0.00	0.00	0.00	0.00
46	SAGBEND	-93.06	-17.99	15.95	192.26	0.000	0.000	119.36	0.03	0.00	0.00	0.00	0.00
47	SAGBEND	-98.89	-19.64	15.66	198.31	0.000	0.000	119.26	0.03	0.00	0.00	0.00	0.00
48	SAGBEND	-104.71	-21.25	15.37	204.36	0.000	0.000	119.16	0.03	0.00	0.00	0.00	0.00
49	SAGBEND	-110.55	-22.84	15.07	210.41	0.000	0.000	119.07	0.03	0.00	0.00	0.00	0.00
50	SAGBEND	-116.40	-24.40	14.78	216.46	0.000	0.000	118.97	0.03	0.00	0.00	0.00	0.00
51	SAGBEND	-122.25	-25.93	14.49	222.51	0.000	0.000	118.88	0.03	0.00	0.00	0.00	0.00
52	SAGBEND	-128.11	-27.43	14.20	228.56	0.000	0.000	118.80	0.03	0.00	0.00	0.00	0.00
53	SAGBEND	-133.98	-28.90	13.90	234.61	0.000	0.000	118.71	0.03	0.00	0.00	0.00	0.00
54	SAGBEND	-139.86	-30.34	13.61	240.66	0.000	0.000	118.63	0.03	0.00	0.00	0.00	0.00
55	SAGBEND	-145.74	-31.74	13.31	246.71	0.000	0.000	118.54	0.03	0.00	0.00	0.00	0.00
56	SAGBEND	-151.64	-33.12	13.01	252.76	0.000	0.000	118.46	0.03	0.00	0.00	0.00	0.00
57	SAGBEND	-157.53	-34.47	12.72	258.81	0.000	0.000	118.39	0.03	0.00	0.00	0.00	0.00
58	SAGBEND	-163.44	-35.79	12.42	264.86	0.000	0.000	118.31	0.03	0.00	0.00	0.00	0.00
59	SAGBEND	-169.35	-37.07	12.12	270.91	0.000	0.000	118.24	0.03	0.00	0.00	0.00	0.00
60	SAGBEND	-175.27	-38.33	11.82	276.96	0.000	0.000	118.16	0.03	0.00	0.00	0.00	0.00

S T A T I C P I P E C O O R D I N A T E S, F O R C E S A N D S T R E S S E S

NODE NO.	PIPE SECTION	X COORD (M)	Y COORD (M)	VERT ANGLE (DEG)	PIPE LENGTH (M)	SUPPORT REACTION (KN)	SEPARA -TION (M)	AXIAL TENSION (KN)	BENDING MOMENT (KN-M)	TENSILE STRESS (MPA)	BENDING STRESS (MPA)	TOTAL STRESS (MPA)	PERCNT YIELD (PCT)
61	SAGBEND	-181.19	-39.55	11.52	283.01	0.000	0.000	118.09	0.01	0.00	0.00	0.00	0.00
62	SAGBEND	-184.67	-40.25	11.34	286.56	0.000	0.000	118.05	0.00	0.00	0.00	0.00	0.00
63	SAGBEND	-188.15	-40.94	5.05	290.11	0.000	0.000	197.86	0.18	16.73	0.28	19.60	5.45
64	SAGBEND	-193.14	-41.38	4.72	295.11	0.000	0.000	193.00	48.47	16.24	75.04	93.59	26.00
65	SAGBEND	-199.17	-41.82	3.70	301.16	0.000	0.000	180.91	80.29	15.05	124.31	141.67	39.35
66	SAGBEND	-205.21	-42.15	2.38	307.21	0.000	0.000	159.39	87.89	12.96	136.06	151.35	42.04
67	SAGBEND	-211.26	-42.33	1.11	313.26	0.863	0.000	129.75	72.98	10.10	112.99	125.44	34.84
68	SEABED	-217.31	-42.40	0.26	319.31	6.967	0.000	109.17	35.60	8.11	55.12	65.64	18.23
69	SEABED	-223.36	-42.40	-0.05	325.36	8.727	0.000	104.82	8.13	7.69	12.58	22.91	6.36
70	SEABED	-229.41	-42.40	-0.08	331.41	7.544	0.000	104.66	-1.72	7.68	-2.66	13.24	3.68
71	SEABED	-235.46	-42.39	-0.04	337.46	6.468	0.000	104.66	-2.62	7.68	-4.06	14.58	4.05
72	SEABED	-241.51	-42.39	-0.01	343.51	6.023	0.000	104.63	-1.31	7.67	-2.03	12.63	3.51
73	SEABED	-247.56	-42.39	0.00	349.56	5.949	0.000	104.62	-0.32	7.67	-0.49	11.18	3.11
74	SEABED	-253.61	-42.39	0.00	355.61	5.989	0.000	104.62	0.05	7.67	0.08	10.80	3.00
75	SEABED	-259.66	-42.39	0.00	361.66	6.027	0.000	104.62	0.09	7.67	0.14	10.86	3.02
76	SEABED	-265.71	-42.39	0.00	367.71	6.044	0.000	104.62	0.05	7.67	0.07	10.79	3.00
77	SEABED	-271.76	-42.39	0.00	373.76	6.047	0.000	104.62	0.01	7.67	0.02	10.74	2.98
78	SEABED	-277.81	-42.39	0.00	379.81	6.046	0.000	104.62	0.00	7.67	0.00	10.73	2.98
79	SEABED	-283.86	-42.39	0.00	385.86	6.044	0.000	104.62	0.00	7.67	-0.01	10.73	2.98
80	SEABED	-289.91	-42.39	0.00	391.91	6.044	0.000	104.62	0.00	7.67	0.00	10.73	2.98
81	SEABED	-295.96	-42.39	0.00	397.96	6.043	0.000	104.62	0.00	7.67	0.00	10.72	2.98
82	SEABED	-302.01	-42.39	0.00	404.01	6.044	0.000	104.62	0.00	7.67	0.00	10.72	2.98
83	SEABED	-308.06	-42.39	0.00	410.06	6.044	0.000	104.62	0.00	7.67	0.00	10.72	2.98
84	SEABED	-314.11	-42.39	0.00	416.11	6.044	0.000	104.62	0.00	7.67	0.00	10.72	2.98
85	SEABED	-320.16	-42.39	0.00	422.16	6.044	0.000	104.62	0.00	7.67	0.00	10.72	2.98
86	SEABED	-326.21	-42.39	0.00	428.21	6.044	0.000	104.62	0.00	7.67	0.00	10.72	2.98
87	SEABED	-332.26	-42.39	0.00	434.26	6.044	0.000	104.62	0.00	7.67	0.00	10.72	2.98
88	SEABED	-338.31	-42.39	0.00	440.31	6.044	0.000	104.62	0.00	7.67	0.00	10.72	2.98
89	SEABED	-344.36	-42.39	0.00	446.36	6.044	0.000	104.62	0.00	7.67	0.00	10.72	2.98
90	SEABED	-350.41	-42.39	0.00	452.41	6.044	0.000	104.62	0.00	7.67	0.00	10.72	2.98
91	SEABED	-356.46	-42.39	0.00	458.46	6.044	0.000	104.62	0.00	7.67	0.00	10.72	2.98
92	SEABED	-362.51	-42.39	0.00	464.51	6.044	0.000	104.62	0.00	7.67	0.00	10.72	2.98
93	SEABED	-368.56	-42.39	0.00	470.56	6.044	0.000	104.62	0.00	7.67	0.00	10.72	2.98
94	SEABED	-374.61	-42.39	0.00	476.61	6.044	0.000	104.62	0.00	7.67	0.00	10.72	2.98
95	SEABED	-380.66	-42.39	0.00	482.66	6.044	0.000	104.62	0.00	7.67	0.00	10.72	2.98
96	SEABED	-386.71	-42.39	0.00	488.71	6.044	0.000	104.62	0.00	7.67	0.00	10.72	2.98
97	SEABED	-392.76	-42.39	0.00	494.76	6.044	0.000	104.62	0.00	7.67	0.00	10.72	2.98
98	SEABED	-398.81	-42.39	0.00	500.81	6.044	0.000	104.62	0.00	7.67	0.00	10.72	2.98
99	SEABED	-404.86	-42.39	0.00	506.86	6.044	0.000	104.62	0.00	7.67	0.00	10.72	2.98
100	SEABED	-410.91	-42.39	0.00	512.91	0.000	0.000	104.62	0.00	7.67	0.00	10.72	2.98

S T A T I C P I P E C O O R D I N A T E S, F O R C E S A N D S T R E S S E S

NODE NO.	PIPE SECTION	X COORD (M)	Y COORD (M)	VERT ANGLE (DEG)	PIPE LENGTH (M)	SUPPORT REACTION (KN)	SEPARA -TION (M)	AXIAL TENSION (KN)	BENDING MOMENT (KN-M)	TENSILE STRESS (MPA)	BENDING STRESS (MPA)	TOTAL STRESS (MPA)	PERCNT YIELD (PCT)
1	LAYBARGE	96.31	6.41	1.69	0.00	0.655	0.000	0.00	0.00	0.00	0.00	0.00	0.00
3	LAYBARGE	84.28	6.05	1.70	12.04	1.244	0.000	-0.04	0.00	0.00	0.00	0.00	0.00

5	LAYBARGE	73.45	5.73	1.89	22.87	1.315	0.000	-0.08	0.00	0.00	0.00	0.00	0.00
7	TENSIONR	60.11	5.24	2.24	36.23	1.532	0.000	104.97	0.00	0.00	0.00	0.00	0.00
9	LAYBARGE	51.10	4.86	2.21	45.24	0.000	0.000	104.93	0.00	0.00	0.00	0.00	0.00
10	LAYBARGE	46.45	4.70	2.05	49.89	0.833	0.000	104.92	0.00	0.00	0.00	0.00	0.00
12	LAYBARGE	38.36	4.41	1.92	57.99	0.000	0.000	104.88	0.00	0.00	0.00	0.00	0.00
13	LAYBARGE	35.36	4.31	2.57	60.99	3.625	0.000	104.86	0.00	0.00	0.00	0.00	0.00
15	LAYBARGE	26.35	3.78	3.20	70.02	0.000	0.000	104.82	0.00	0.00	0.00	0.00	0.00
16	LAYBARGE	23.33	3.62	4.15	73.04	4.904	0.000	104.78	0.00	0.00	0.00	0.00	0.00
18	LAYBARGE	11.88	2.57	5.06	84.54	0.000	0.000	104.70	0.00	0.00	0.00	0.00	0.00
19	LAYBARGE	8.83	2.31	4.76	87.60	0.000	0.552	104.67	0.00	0.00	0.00	0.00	0.00
21	LAYBARGE	6.02	2.08	4.58	90.42	0.000	0.000	104.65	0.00	0.00	0.00	0.00	0.00
22	LAYBARGE	3.02	1.84	4.30	93.43	0.000	1.224	104.62	0.00	0.00	0.00	0.00	0.00
24	LAYBARGE	-7.08	1.12	3.95	103.55	0.000	0.000	104.54	0.00	0.00	0.00	0.00	0.00
27	STINGER	-7.51	1.09	3.65	103.99	0.000	1.342	104.54	0.00	0.00	0.00	0.00	0.00
29	STINGER	-16.59	0.53	3.23	113.09	0.000	0.489	104.48	0.00	0.00	0.00	0.00	0.00
32	STINGER	-26.42	0.02	2.66	122.93	0.000	0.020	104.42	0.00	0.00	0.00	0.00	0.00
34	STINGER	-37.35	-0.43	6.60	133.86	16.046	0.000	104.06	0.00	0.00	0.00	0.00	0.00
36	STINGER	-40.32	-1.00	14.85	136.90	15.105	0.000	104.03	0.00	0.00	0.00	0.00	0.00
38	SAGBEND	-46.82	-3.22	18.73	143.77	0.000	0.000	104.10	0.00	0.00	0.00	0.00	0.00
39	SAGBEND	-52.55	-5.15	18.43	149.82	0.000	0.000	103.92	0.00	0.00	0.00	0.00	0.00
40	SAGBEND	-58.30	-7.04	18.13	155.87	0.000	0.000	103.74	0.00	0.00	0.00	0.00	0.00
41	SAGBEND	-64.05	-8.91	17.83	161.92	0.000	0.000	103.56	0.00	0.00	0.00	0.00	0.00
42	SAGBEND	-69.82	-10.75	17.52	167.97	0.000	0.000	103.39	0.00	0.00	0.00	0.00	0.00
43	SAGBEND	-75.59	-12.55	17.22	174.02	0.000	0.000	103.22	0.00	0.00	0.00	0.00	0.00
44	SAGBEND	-81.37	-14.33	16.92	180.07	0.000	0.000	103.05	0.00	0.00	0.00	0.00	0.00
45	SAGBEND	-87.17	-16.07	16.61	186.12	0.000	0.000	102.88	0.00	0.00	0.00	0.00	0.00
46	SAGBEND	-92.97	-17.79	16.31	192.17	0.000	0.000	102.72	0.00	0.00	0.00	0.00	0.00
47	SAGBEND	-98.78	-19.47	16.00	198.22	0.000	0.000	102.56	0.00	0.00	0.00	0.00	0.00
48	SAGBEND	-104.60	-21.12	15.69	204.27	0.000	0.000	102.41	0.00	0.00	0.00	0.00	0.00
49	SAGBEND	-110.43	-22.75	15.38	210.32	0.000	0.000	102.25	0.00	0.00	0.00	0.00	0.00
50	SAGBEND	-116.27	-24.33	15.08	216.37	0.000	0.000	102.10	0.00	0.00	0.00	0.00	0.00
51	SAGBEND	-122.11	-25.89	14.77	222.42	0.000	0.000	101.96	0.00	0.00	0.00	0.00	0.00
52	SAGBEND	-127.97	-27.42	14.45	228.47	0.000	0.000	101.81	0.00	0.00	0.00	0.00	0.00
53	SAGBEND	-133.83	-28.91	14.14	234.52	0.000	0.000	101.67	0.00	0.00	0.00	0.00	0.00
54	SAGBEND	-139.70	-30.37	13.83	240.57	0.000	0.000	101.53	0.00	0.00	0.00	0.00	0.00
55	SAGBEND	-145.58	-31.80	13.52	246.62	0.000	0.000	101.40	0.00	0.00	0.00	0.00	0.00
56	SAGBEND	-151.46	-33.20	13.20	252.67	0.000	0.000	101.27	0.00	0.00	0.00	0.00	0.00
57	SAGBEND	-157.36	-34.57	12.89	258.72	0.000	0.000	101.14	0.00	0.00	0.00	0.00	0.00
58	SAGBEND	-163.26	-35.90	12.57	264.77	0.000	0.000	101.01	0.00	0.00	0.00	0.00	0.00
59	SAGBEND	-169.17	-37.20	12.25	270.82	0.000	0.000	100.89	0.00	0.00	0.00	0.00	0.00
60	SAGBEND	-175.08	-38.47	11.93	276.86	0.000	0.000	100.77	0.00	0.00	0.00	0.00	0.00

S T A T I C P I P E C O O R D I N A T E S, F O R C E S A N D S T R E S S E S

NODE NO.	PIPE SECTION	X COORD (M)	Y COORD (M)	VERT ANGLE (DEG)	PIPE LENGTH (M)	SUPPORT REACTION (KN)	SEPARA -TION (M)	AXIAL TENSION (KN)	BENDING MOMENT (KN-M)	TENSILE STRESS (MPA)	BENDING STRESS (MPA)	TOTAL STRESS (MPA)	PERCNT YIELD (PCT)
61	SAGBEND	-181.01	-39.70	11.62	282.91	0.000	0.000	100.65	0.00	0.00	0.00	0.00	0.00
62	SAGBEND	-184.48	-40.41	11.43	286.46	0.000	0.000	100.58	0.00	0.00	0.00	0.00	0.00
63	SAGBEND	-187.96	-41.11	4.62	290.01	0.000	0.000	99.85	0.00	7.28	0.00	10.25	2.85
64	SAGBEND	-192.95	-41.50	4.30	295.02	0.000	0.000	99.41	46.50	7.22	71.99	81.55	22.65
65	SAGBEND	-198.99	-41.91	3.31	301.07	0.000	0.000	98.92	76.37	7.15	118.23	127.70	35.47
66	SAGBEND	-205.03	-42.19	2.06	307.12	0.000	0.000	98.62	81.77	7.10	126.60	136.04	37.79
67	SAGBEND	-211.08	-42.35	0.90	313.17	1.475	0.000	98.52	63.54	7.09	98.36	107.81	29.95
68	SEABED	-217.13	-42.40	0.18	319.22	7.398	0.000	98.57	28.49	7.09	44.11	53.63	14.90
69	SEABED	-223.18	-42.40	-0.06	325.27	8.417	0.000	98.59	5.63	7.09	8.71	18.52	5.15
70	SEABED	-229.23	-42.39	-0.07	331.32	7.266	0.000	98.59	-1.94	7.09	-3.00	13.00	3.61
71	SEABED	-235.28	-42.39	-0.03	337.37	6.352	0.000	98.59	-2.29	7.09	-3.54	13.52	3.75
72	SEABED	-241.33	-42.39	-0.01	343.42	6.003	0.000	98.59	-1.06	7.09	-1.64	11.71	3.25
73	SEABED	-247.38	-42.39	0.00	349.47	5.959	0.000	98.59	-0.22	7.09	-0.34	10.50	2.92
74	SEABED	-253.43	-42.39	0.00	355.52	5.999	0.000	98.59	0.06	7.09	0.10	10.28	2.85
75	SEABED	-259.48	-42.39	0.00	361.57	6.032	0.000	98.59	0.08	7.09	0.13	10.30	2.86
76	SEABED	-265.53	-42.39	0.00	367.62	6.045	0.000	98.59	0.04	7.09	0.06	10.24	2.84
77	SEABED	-271.58	-42.39	0.00	373.67	6.047	0.000	98.59	0.01	7.09	0.01	10.20	2.83
78	SEABED	-277.63	-42.39	0.00	379.72	6.045	0.000	98.59	0.00	7.09	0.00	10.19	2.83
79	SEABED	-283.68	-42.39	0.00	385.77	6.044	0.000	98.59	0.00	7.09	0.00	10.19	2.83
80	SEABED	-289.73	-42.39	0.00	391.82	6.044	0.000	98.59	0.00	7.09	0.00	10.19	2.83
81	SEABED	-295.78	-42.39	0.00	397.87	6.044	0.000	98.59	0.00	7.09	0.00	10.19	2.83
82	SEABED	-301.83	-42.39	0.00	403.92	6.044	0.000	98.59	0.00	7.09	0.00	10.19	2.83
83	SEABED	-307.88	-42.39	0.00	409.97	6.044	0.000	98.59	0.00	7.09	0.00	10.19	2.83
84	SEABED	-313.93	-42.39	0.00	416.02	6.044	0.000	98.59	0.00	7.09	0.00	10.19	2.83
85	SEABED	-319.98	-42.39	0.00	422.07	6.044	0.000	98.59	0.00	7.09	0.00	10.19	2.83
86	SEABED	-326.03	-42.39	0.00	428.12	6.044	0.000	98.59	0.00	7.09	0.00	10.19	2.83
87	SEABED	-332.08	-42.39	0.00	434.17	6.044	0.000	98.59	0.00	7.09	0.00	10.19	2.83
88	SEABED	-338.13	-42.39	0.00	440.22	6.044	0.000	98.59	0.00	7.09	0.00	10.19	2.83
89	SEABED	-344.18	-42.39	0.00	446.27	6.044	0.000	98.59	0.00	7.09	0.00	10.19	2.83
90	SEABED	-350.23	-42.39	0.00	452.32	6.044	0.000	98.59	0.00	7.09	0.00	10.19	2.83
91	SEABED	-356.28	-42.39	0.00	458.37	6.044	0.000	98.59	0.00	7.09	0.00	10.19	2.83
92	SEABED	-362.33	-42.39	0.00	464.42	6.044	0.000	98.59	0.00	7.09	0.00	10.19	2.83
93	SEABED	-368.38	-42.39	0.00	470.47	6.044	0.000	98.59	0.00	7.09	0.00	10.19	2.83
94	SEABED	-374.43	-42.39	0.00	476.52	6.044	0.000	98.59	0.00	7.09	0.00	10.19	2.83
95	SEABED	-380.48	-42.39	0.00	482.57	6.044	0.000	98.59	0.00	7.09	0.00	10.19	2.83
96	SEABED	-386.53	-42.39	0.00	488.62	6.044	0.000	98.59	0.00	7.09	0.00	10.19	2.83
97	SEABED	-392.58	-42.39	0.00	494.67	0.000	0.000	98.59	0.00	7.09	0.00	10.19	2.83

S T A T I C P I P E C O O R D I N A T E S, F O R C E S A N D S T R E S S E S

NODE NO.	PIPE SECTION	X COORD (M)	Y COORD (M)	VERT ANGLE (DEG)	PIPE LENGTH (M)	SUPPORT REACTION (KN)	SEPARA -TION (M)	AXIAL TENSION (KN)	BENDING MOMENT (KN-M)	TENSILE STRESS (MPA)	BENDING STRESS (MPA)	TOTAL STRESS (MPA)	PERCNT YIELD (PCT)
1	LAYBARGE	96.31	6.41	1.69	0.00	0.655	0.000	0.00	0.00	0.00	0.00	0.00	0.00
3	LAYBARGE	84.28	6.05	1.70	12.04	1.244	0.000	-0.04	0.00	0.00	0.00	0.00	0.00
5	LAYBARGE	73.45	5.73	1.89	22.87	1.315	0.000	-0.08	0.00	0.00	0.00	0.00	0.00
7	TENSIONR	60.11	5.24	2.24	36.23	1.532	0.000	104.97	0.00	0.00	0.00	0.00	0.00
9	LAYBARGE	51.10	4.86	2.21	45.24	0.000	0.000	104.93	0.00	0.00	0.00	0.00	0.00
10	LAYBARGE	46.45	4.70	2.05	49.89	0.833	0.000	104.92	0.00	0.00	0.00	0.00	0.00
12	LAYBARGE	38.36	4.41	1.92	57.99	0.000	0.000	104.88	0.00	0.00	0.00	0.00	0.00
13	LAYBARGE	35.36	4.31	2.57	60.99	3.625	0.000	104.86	0.00	0.00	0.00	0.00	0.00
15	LAYBARGE	26.35	3.78	3.20	70.02	0.000	0.000	104.82	0.00	0.00	0.00	0.00	0.00
16	LAYBARGE	23.33	3.62	4.15	73.04	4.895	0.000	104.78	0.00	0.00	0.00	0.00	0.00
18	LAYBARGE	11.88	2.57	5.06	84.54	0.000	0.000	104.70	0.00	0.00	0.00	0.00	0.00
19	LAYBARGE	8.83	2.31	4.75	87.60	0.000	0.553	104.67	0.00	0.00	0.00	0.00	0.00
21	LAYBARGE	6.02	2.08	4.58	90.42	0.000	0.000	104.65	0.00	0.00	0.00	0.00	0.00
22	LAYBARGE	3.02	1.84	4.30	93.43	0.000	1.225	104.62	0.00	0.00	0.00	0.00	0.00
24	LAYBARGE	-7.08	1.12	3.95	103.55	0.000	0.000	104.54	0.00	0.00	0.00	0.00	0.00
27	STINGER	-7.52	1.09	3.65	103.99	0.000	1.345	104.54	0.00	0.00	0.00	0.00	0.00
29	STINGER	-16.60	0.53	3.22	113.09	0.000	0.494	104.48	0.00	0.00	0.00	0.00	0.00
32	STINGER	-26.43	0.03	2.65	122.94	0.000	0.024	104.42	0.00	0.00	0.00	0.00	0.00
34	STINGER	-37.35	-0.42	6.59	133.87	16.044	0.000	104.06	0.00	0.00	0.00	0.00	0.00
36	STINGER	-40.33	-0.99	14.57	136.90	14.086	0.000	104.07	0.00	0.00	0.00	0.00	0.00
38	SAGBEND	-46.84	-3.15	18.16	143.76	0.000	0.000	104.11	0.00	0.00	0.00	0.00	0.00
39	SAGBEND	-52.59	-5.02	17.86	149.81	0.000	0.000	103.93	0.00	0.00	0.00	0.00	0.00
40	SAGBEND	-58.36	-6.86	17.55	155.86	0.000	0.000	103.76	0.00	0.00	0.00	0.00	0.00
41	SAGBEND	-64.13	-8.67	17.25	161.91	0.000	0.000	103.58	0.00	0.00	0.00	0.00	0.00
42	SAGBEND	-69.91	-10.44	16.95	167.96	0.000	0.000	103.42	0.00	0.00	0.00	0.00	0.00
43	SAGBEND	-75.70	-12.19	16.65	174.01	0.000	0.000	103.25	0.00	0.00	0.00	0.00	0.00
44	SAGBEND	-81.51	-13.91	16.34	180.06	0.000	0.000	103.09	0.00	0.00	0.00	0.00	0.00
45	SAGBEND	-87.32	-15.60	16.04	186.11	0.000	0.000	102.93	0.00	0.00	0.00	0.00	0.00
46	SAGBEND	-93.14	-17.25	15.73	192.16	0.000	0.000	102.77	0.00	0.00	0.00	0.00	0.00
47	SAGBEND	-98.96	-18.88	15.42	198.21	0.000	0.000	102.62	0.00	0.00	0.00	0.00	0.00
48	SAGBEND	-104.80	-20.47	15.12	204.26	0.000	0.000	102.47	0.00	0.00	0.00	0.00	0.00
49	SAGBEND	-110.64	-22.03	14.81	210.31	0.000	0.000	102.32	0.00	0.00	0.00	0.00	0.00
50	SAGBEND	-116.50	-23.56	14.50	216.36	0.000	0.000	102.18	0.00	0.00	0.00	0.00	0.00
51	SAGBEND	-122.36	-25.06	14.19	222.41	0.000	0.000	102.03	0.00	0.00	0.00	0.00	0.00
52	SAGBEND	-128.23	-26.53	13.87	228.46	0.000	0.000	101.90	0.00	0.00	0.00	0.00	0.00
53	SAGBEND	-134.11	-27.96	13.56	234.51	0.000	0.000	101.76	0.00	0.00	0.00	0.00	0.00
54	SAGBEND	-139.99	-29.37	13.25	240.56	0.000	0.000	101.63	0.00	0.00	0.00	0.00	0.00
55	SAGBEND	-145.88	-30.74	12.93	246.61	0.000	0.000	101.50	0.00	0.00	0.00	0.00	0.00
56	SAGBEND	-151.78	-32.07	12.62	252.66	0.000	0.000	101.37	0.00	0.00	0.00	0.00	0.00
57	SAGBEND	-157.69	-33.38	12.30	258.71	0.000	0.000	101.25	0.00	0.00	0.00	0.00	0.00
58	SAGBEND	-163.61	-34.65	11.99	264.76	0.000	0.000	101.13	0.00	0.00	0.00	0.00	0.00
59	SAGBEND	-169.53	-35.89	11.67	270.81	0.000	0.000	101.01	0.00	0.00	0.00	0.00	0.00
60	SAGBEND	-175.46	-37.10	11.35	276.86	0.000	0.000	100.90	0.00	0.00	0.00	0.00	0.00

S T A T I C P I P E C O O R D I N A T E S, F O R C E S A N D S T R E S S E S

NODE NO.	PIPE SECTION	X COORD (M)	Y COORD (M)	VERT ANGLE (DEG)	PIPE LENGTH (M)	SUPPORT REACTION (KN)	SEPARA -TION (M)	AXIAL TENSION (KN)	BENDING MOMENT (KN-M)	TENSILE STRESS (MPA)	BENDING STRESS (MPA)	TOTAL STRESS (MPA)	PERCNT YIELD (PCT)
61	SAGBEND	-181.39	-38.27	11.03	282.91	0.000	0.000	100.79	0.00	0.00	0.00	0.00	0.00
62	SAGBEND	-187.33	-39.41	10.71	288.96	0.000	0.000	100.68	0.00	0.00	0.00	0.00	0.00
63	SAGBEND	-193.28	-40.52	10.39	295.01	0.000	0.000	100.57	0.00	0.00	0.00	0.00	0.00
64	SAGBEND	-198.19	-41.41	3.81	300.01	0.000	0.000	99.88	0.00	7.27	0.00	10.27	2.85

65	SAGBEND	-201.74	-41.64	3.65	303.57	0.000	0.000	99.62	33.37	7.23	51.66	61.26	17.02
66	SAGBEND	-205.29	-41.86	3.23	307.12	0.000	0.000	99.36	55.98	7.20	86.66	96.19	26.72
67	SAGBEND	-211.33	-42.15	2.20	313.17	0.000	0.000	99.02	73.04	7.15	113.08	122.56	34.05
68	SAGBEND	-217.38	-42.32	1.09	319.22	0.527	0.000	98.88	65.08	7.12	100.75	110.23	30.62
69	SEABED	-223.43	-42.39	0.30	325.27	6.000	0.000	98.90	34.85	7.12	53.96	63.49	17.64
70	SEABED	-229.48	-42.40	-0.02	331.32	8.328	0.000	98.92	9.38	7.12	14.53	24.27	6.74
71	SEABED	-235.53	-42.39	-0.07	337.37	7.483	0.000	98.92	-0.81	7.12	-1.25	11.38	3.16
72	SEABED	-241.58	-42.39	-0.04	343.42	6.505	0.000	98.92	-2.30	7.12	-3.56	13.57	3.77
73	SEABED	-247.63	-42.39	-0.01	349.47	6.056	0.000	98.92	-1.28	7.12	-1.98	12.07	3.35
74	SEABED	-253.68	-42.39	0.00	355.52	5.963	0.000	98.92	-0.36	7.12	-0.56	10.73	2.98
75	SEABED	-259.73	-42.39	0.00	361.57	5.991	0.000	98.92	0.02	7.12	0.03	10.24	2.85
76	SEABED	-265.78	-42.39	0.00	367.62	6.026	0.000	98.92	0.08	7.12	0.13	10.33	2.87
77	SEABED	-271.83	-42.39	0.00	373.67	6.043	0.000	98.92	0.05	7.12	0.07	10.28	2.86
78	SEABED	-277.88	-42.39	0.00	379.72	6.046	0.000	98.92	0.01	7.12	0.02	10.23	2.84
79	SEABED	-283.93	-42.39	0.00	385.77	6.046	0.000	98.92	0.00	7.12	0.00	10.22	2.84
80	SEABED	-289.98	-42.39	0.00	391.82	6.044	0.000	98.92	0.00	7.12	0.00	10.22	2.84
81	SEABED	-296.03	-42.39	0.00	397.87	6.044	0.000	98.92	0.00	7.12	0.00	10.22	2.84
82	SEABED	-302.08	-42.39	0.00	403.92	6.044	0.000	98.92	0.00	7.12	0.00	10.22	2.84
83	SEABED	-308.13	-42.39	0.00	409.97	6.044	0.000	98.92	0.00	7.12	0.00	10.21	2.84
84	SEABED	-314.18	-42.39	0.00	416.02	6.044	0.000	98.92	0.00	7.12	0.00	10.22	2.84
85	SEABED	-320.23	-42.39	0.00	422.07	6.044	0.000	98.92	0.00	7.12	0.00	10.22	2.84
86	SEABED	-326.28	-42.39	0.00	428.12	6.044	0.000	98.92	0.00	7.12	0.00	10.21	2.84
87	SEABED	-332.33	-42.39	0.00	434.17	6.044	0.000	98.92	0.00	7.12	0.00	10.21	2.84
88	SEABED	-338.38	-42.39	0.00	440.22	6.044	0.000	98.92	0.00	7.12	0.00	10.21	2.84
89	SEABED	-344.43	-42.39	0.00	446.27	6.044	0.000	98.92	0.00	7.12	0.00	10.21	2.84
90	SEABED	-350.48	-42.39	0.00	452.32	6.044	0.000	98.92	0.00	7.12	0.00	10.21	2.84
91	SEABED	-356.53	-42.39	0.00	458.37	6.044	0.000	98.92	0.00	7.12	0.00	10.21	2.84
92	SEABED	-362.58	-42.39	0.00	464.42	6.044	0.000	98.92	0.00	7.12	0.00	10.21	2.84
93	SEABED	-368.63	-42.39	0.00	470.47	6.044	0.000	98.92	0.00	7.12	0.00	10.21	2.84
94	SEABED	-374.68	-42.39	0.00	476.52	6.044	0.000	98.92	0.00	7.12	0.00	10.21	2.84
95	SEABED	-380.73	-42.39	0.00	482.57	6.044	0.000	98.92	0.00	7.12	0.00	10.21	2.84
96	SEABED	-386.78	-42.39	0.00	488.62	6.044	0.000	98.92	0.00	7.12	0.00	10.21	2.84
97	SEABED	-392.83	-42.39	0.00	494.67	0.000	0.000	98.92	0.00	7.12	0.00	10.21	2.84

INITIATION STRAIN HEADING 180°

S T A T I C P I P E C O O R D I N A T E S, F O R C E S A N D S T R A I N S

NODE NO.	PIPE SECTION	X COORD (M)	Y COORD (M)	VERT ANGLE (DEG)	PIPE LENGTH (M)	SUPPORT REACTION (KN)	SEPARA -TION (M)	AXIAL TENSION (KN)	BENDING MOMENT (KN-M)	TENSILE STRAIN (PCT)	BENDING STRAIN (PCT)	TOTAL STRAIN (PCT)	PERCNT ALLOW (PCT)
1	LAYBARGE	96.31	6.41	1.93	0.00	9.918	0.000	0.00	2.74	0.0000	0.0020	0.0020	0.00
3	LAYBARGE	84.28	6.05	1.58	12.04	24.237	0.000	-0.73	-19.34	0.0000	-0.0145	0.0145	0.00
5	LAYBARGE	73.45	5.73	1.89	22.87	24.091	0.000	-1.39	-28.85	-0.0001	-0.0216	0.0216	0.00
7	TENSIONR	60.10	5.24	2.33	36.23	32.872	0.000	70.92	-24.98	0.0033	-0.0187	0.0220	0.00
9	LAYBARGE	51.10	4.86	2.19	45.24	0.000	0.000	70.18	34.25	0.0033	0.0256	0.0289	0.00
10	LAYBARGE	46.45	4.70	1.85	49.89	6.742	0.000	69.87	17.88	0.0033	0.0134	0.0166	0.00
12	LAYBARGE	35.36	4.31	2.82	60.99	45.300	0.000	68.74	-94.18	0.0032	-0.0704	0.0736	0.00
14	LAYBARGE	25.34	3.64	4.49	71.03	14.454	0.000	67.72	-34.31	0.0031	-0.0257	0.0288	0.00
16	LAYBARGE	19.30	3.15	4.69	77.09	0.000	0.000	66.77	0.00	0.0031	0.0000	0.0031	0.00
17	LAYBARGE	8.83	2.28	4.66	87.59	0.000	0.528	66.74	0.00	0.0000	0.0000	0.0000	0.00
19	LAYBARGE	4.81	1.96	4.55	91.63	0.000	0.000	66.74	0.00	0.0000	0.0000	0.0000	0.00
20	LAYBARGE	3.02	1.82	4.44	93.43	0.000	1.202	66.73	0.00	0.0000	0.0000	0.0000	0.00
24	STINGER	-7.53	1.01	4.27	104.00	0.000	1.276	66.71	0.00	0.0000	0.0000	0.0000	0.00
26	STINGER	-16.61	0.35	4.08	113.11	0.000	0.334	66.69	0.00	0.0000	0.0000	0.0000	0.00
29	STINGER	-26.49	-0.34	4.88	123.02	2.150	0.000	66.68	0.00	0.0000	0.0000	0.0000	0.00
31	STINGER	-37.37	-1.44	8.54	133.95	6.470	0.000	66.60	0.00	0.0000	0.0000	0.0000	0.00
33	STINGER	-40.34	-2.03	11.31	136.98	0.000	0.160	66.68	0.00	0.0000	0.0000	0.0000	0.00
35	SAGBEND	-46.49	-3.26	11.30	143.25	0.000	0.000	66.68	0.00	0.0000	0.0000	0.0000	0.00
36	SAGBEND	-52.42	-4.45	11.29	149.30	0.000	0.000	66.67	0.00	0.0000	0.0000	0.0000	0.00
37	SAGBEND	-58.35	-5.63	11.28	155.35	0.000	0.000	66.67	0.00	0.0000	0.0000	0.0000	0.00
38	SAGBEND	-64.29	-6.81	11.27	161.40	0.000	0.000	66.67	0.00	0.0000	0.0000	0.0000	0.00
39	SAGBEND	-70.22	-7.99	11.25	167.45	0.000	0.000	66.66	0.00	0.0000	0.0000	0.0000	0.00
40	SAGBEND	-76.15	-9.17	11.24	173.50	0.000	0.000	66.66	0.00	0.0000	0.0000	0.0000	0.00
41	SAGBEND	-82.09	-10.35	11.23	179.55	0.000	0.000	66.66	0.00	0.0000	0.0000	0.0000	0.00
42	SAGBEND	-88.02	-11.53	11.21	185.60	0.000	0.000	66.65	0.00	0.0000	0.0000	0.0000	0.00
43	SAGBEND	-93.96	-12.70	11.20	191.65	0.000	0.000	66.65	0.00	0.0000	0.0000	0.0000	0.00
44	SAGBEND	-99.89	-13.88	11.19	197.70	0.000	0.000	66.65	0.00	0.0000	0.0000	0.0000	0.00
45	SAGBEND	-105.83	-15.05	11.17	203.75	0.000	0.000	66.64	0.00	0.0000	0.0000	0.0000	0.00
46	SAGBEND	-111.76	-16.22	11.16	209.80	0.000	0.000	66.64	0.00	0.0000	0.0000	0.0000	0.00
47	SAGBEND	-117.70	-17.39	11.15	215.85	0.000	0.000	66.64	0.00	0.0000	0.0000	0.0000	0.00
48	SAGBEND	-123.63	-18.56	11.13	221.90	0.000	0.000	66.64	0.00	0.0000	0.0000	0.0000	0.00
49	SAGBEND	-129.57	-19.73	11.12	227.95	0.000	0.000	66.63	0.00	0.0000	0.0000	0.0000	0.00
50	SAGBEND	-135.51	-20.90	11.11	234.00	0.000	0.000	66.63	0.00	0.0000	0.0000	0.0000	0.00
51	SAGBEND	-141.44	-22.06	11.09	240.05	0.000	0.000	66.63	0.00	0.0000	0.0000	0.0000	0.00
52	SAGBEND	-147.38	-23.22	11.08	246.10	0.000	0.000	66.62	0.00	0.0000	0.0000	0.0000	0.00
53	SAGBEND	-153.32	-24.39	11.07	252.15	0.000	0.000	66.62	0.00	0.0000	0.0000	0.0000	0.00
54	SAGBEND	-159.26	-25.55	11.05	258.20	0.000	0.000	66.62	0.00	0.0000	0.0000	0.0000	0.00
55	SAGBEND	-165.19	-26.71	11.04	264.25	0.000	0.000	66.61	0.00	0.0000	0.0000	0.0000	0.00
56	SAGBEND	-171.13	-27.86	11.03	270.30	0.000	0.000	66.61	0.00	0.0000	0.0000	0.0000	0.00
57	SAGBEND	-177.07	-29.02	11.01	276.35	0.000	0.000	66.61	0.00	0.0000	0.0000	0.0000	0.00
58	SAGBEND	-180.66	-29.72	11.00	280.01	0.000	0.000	66.61	0.00	0.0000	0.0000	0.0000	0.00
59	SAGBEND	-184.81	-30.51	10.67	284.23	0.000	0.000	66.53	0.00	0.0000	0.0000	0.0000	0.00
60	SAGBEND	-188.96	-31.28	10.33	288.45	0.000	0.000	66.46	0.00	0.0000	0.0000	0.0000	0.00

S T A T I C P I P E C O O R D I N A T E S, F O R C E S A N D S T R A I N S

NODE NO.	PIPE SECTION	X COORD (M)	Y COORD (M)	VERT ANGLE (DEG)	PIPE LENGTH (M)	SUPPORT REACTION (KN)	SEPARA -TION (M)	AXIAL TENSION (KN)	BENDING MOMENT (KN-M)	TENSILE STRAIN (PCT)	BENDING STRAIN (PCT)	TOTAL STRAIN (PCT)	PERCNT ALLOW (PCT)
61	SAGBEND	-194.91	-32.34	9.84	294.50	0.000	0.000	66.36	0.00	0.0000	0.0000	0.0000	0.00
62	SAGBEND	-200.88	-33.35	9.36	300.55	0.000	0.000	66.26	0.00	0.0000	0.0000	0.0000	0.00
63	SAGBEND	-206.85	-34.31	8.87	306.60	0.000	0.000	66.17	0.00	0.0000	0.0000	0.0000	0.00
64	SAGBEND	-212.83	-35.21	8.38	312.65	0.000	0.000	66.09	0.00	0.0000	0.0000	0.0000	0.00
65	SAGBEND	-218.82	-36.07	7.89	318.70	0.000	0.000	66.01	0.00	0.0000	0.0000	0.0000	0.00
66	SAGBEND	-224.82	-36.87	7.39	324.75	0.000	0.000	65.93	0.00	0.0000	0.0000	0.0000	0.00
67	SAGBEND	-230.82	-37.63	6.90	330.80	0.000	0.000	65.86	0.00	0.0000	0.0000	0.0000	0.00
68	SAGBEND	-236.83	-38.33	6.41	336.85	0.000	0.000	65.79	0.00	0.0000	0.0000	0.0000	0.00
69	SAGBEND	-242.85	-38.98	5.91	342.90	0.000	0.000	65.73	0.00	0.0000	0.0000	0.0000	0.00
70	SAGBEND	-248.87	-39.57	5.41	348.95	0.000	0.000	65.67	0.00	0.0000	0.0000	0.0000	0.00
71	SAGBEND	-254.89	-40.12	4.92	355.00	0.000	0.000	65.62	0.00	0.0000	0.0000	0.0000	0.00
72	SAGBEND	-260.92	-40.61	4.42	361.05	0.000	0.000	65.58	0.00	0.0000	0.0000	0.0000	0.00
73	SAGBEND	-266.96	-41.05	3.92	367.10	0.000	0.000	65.53	0.00	0.0000	0.0000	0.0000	0.00
74	SAGBEND	-272.99	-41.44	3.42	373.15	0.000	0.000	65.50	0.00	0.0000	0.0000	0.0000	0.00
75	SAGBEND	-279.04	-41.77	2.92	379.20	0.000	0.000	65.47	0.00	0.0000	0.0000	0.0000	0.00
76	SAGBEND	-285.08	-42.05	2.42	385.25	0.000	0.000	65.44	0.00	0.0000	0.0000	0.0000	0.00
77	SAGBEND	-291.12	-42.28	1.92	391.30	0.000	0.000	65.42	0.00	0.0000	0.0000	0.0000	0.00
78	SAGBEND	-297.17	-42.46	1.42	397.35	0.000	0.000	65.40	0.00	0.0000	0.0000	0.0000	0.00
79	SAGBEND	-303.22	-42.58	0.92	403.40	0.000	0.000	65.39	0.00	0.0000	0.0000	0.0000	0.00
80	SAGBEND	-309.27	-42.65	0.43	409.45	0.010	0.000	65.38	-0.01	0.0000	0.0000	0.0000	0.00
81	SEABED	-315.32	-42.67	0.01	415.50	0.378	0.000	65.38	-0.01	0.0000	0.0000	0.0000	0.00
82	SEABED	-321.37	-42.67	0.00	421.55	0.566	0.000	65.38	0.00	0.0000	0.0000	0.0000	0.00
83	SEABED	-327.42	-42.67	0.00	427.60	0.572	0.000	65.38	0.00	0.0000	0.0000	0.0000	0.00
84	SEABED	-333.47	-42.67	0.00	433.65	0.572	0.000	65.38	0.00	0.0000	0.0000	0.0000	0.00
85	SEABED	-339.52	-42.67	0.00	439.70	0.572	0.000	65.38	0.00	0.0000	0.0000	0.0000	0.00
86	SEABED	-345.57	-42.67	0.00	445.75	0.572	0.000	65.38	0.00	0.0000	0.0000	0.0000	0.00
87	SEABED	-351.62	-42.67	0.00	451.80	0.572	0.000	65.38	0.00	0.0000	0.0000	0.0000	0.00
88	SEABED	-357.67	-42.67	0.00	457.85	0.572	0.000	65.38	0.00	0.0000	0.0000	0.0000	0.00
89	SEABED	-363.72	-42.67	0.00	463.90	0.572	0.000	65.38	0.00	0.0000	0.0000	0.0000	0.00
90	SEABED	-369.77	-42.67	0.00	469.95	0.572	0.000	65.38	0.00	0.0000	0.0000	0.0000	0.00
91	SEABED	-375.82	-42.67	0.00	476.00	0.572	0.000	65.38	0.00	0.0000	0.0000	0.0000	0.00
92	SEABED	-381.87	-42.67	0.00	482.05	0.572	0.000	65.38	0.00	0.0000	0.0000	0.0000	0.00
93	SEABED	-387.92	-42.67	0.00	488.10	0.572	0.000	65.38	0.00	0.0000	0.0000	0.0000	0.00
94	SEABED	-393.97	-42.67	0.00	494.15	0.572	0.000	65.38	0.00	0.0000	0.0000	0.0000	0.00
95	SEABED	-400.02	-42.67	0.00	500.20	0.572	0.000	65.38	0.00	0.0000	0.0000	0.0000	0.00
96	SEABED	-406.07	-42.67	0.00	506.25	0.572	0.000	65.38	0.00	0.0000	0.0000	0.0000	0.00
97	SEABED	-412.12	-42.67	0.00	512.30	0.572	0.000	65.38	0.00	0.0000	0.0000	0.0000	0.00
98	SEABED	-418.17	-42.67	0.00	518.35	0.572	0.000	65.38	0.00	0.0000	0.0000	0.0000	0.00
99	SEABED	-424.22	-42.67	0.00	524.40	0.572	0.000	65.38	0.00	0.0000	0.0000	0.0000	0.00
100	SEABED	-430.27	-42.67	0.00	530.45	0.572	0.000	65.38	0.00	0.0000	0.0000	0.0000	0.00
101	SEABED	-436.32	-42.67	0.00	536.50	0.572	0.000	65.38	0.00	0.0000	0.0000	0.0000	0.00
102	SEABED	-442.37	-42.67	0.00	542.55	0.572	0.000	65.38	0.00	0.0000	0.0000	0.0000	0.00
103	SEABED	-448.42	-42.67	0.00	548.60	0.572	0.000	65.38	0.00	0.0000	0.0000	0.0000	0.00
104	SEABED	-454.47	-42.67	0.00	554.65	0.572	0.000	65.38	0.00	0.0000	0.0000	0.0000	0.00

S T A T I C P I P E C O O R D I N A T E S, F O R C E S A N D S T R A I N S

NODE NO.	PIPE SECTION	X COORD (M)	Y COORD (M)	VERT ANGLE (DEG)	PIPE LENGTH (M)	SUPPORT REACTION (KN)	SEPARA -TION (M)	AXIAL TENSION (KN)	BENDING MOMENT (KN-M)	TENSILE STRAIN (PCT)	BENDING STRAIN (PCT)	TOTAL STRAIN (PCT)	PERCNT ALLOW (PCT)
105	SEABED	-460.52	-42.67	0.00	560.70	0.572	0.000	65.38	0.00	0.0000	0.0000	0.0000	0.00
106	SEABED	-466.57	-42.67	0.00	566.75	0.572	0.000	65.38	0.00	0.0000	0.0000	0.0000	0.00
107	SEABED	-472.62	-42.67	0.00	572.80	0.572	0.000	65.38	0.00	0.0000	0.0000	0.0000	0.00

108	SEABED	-478.67	-42.67	0.00	578.85	0.572	0.000	65.38	0.00	0.0000	0.0000	0.0000	0.00
109	SEABED	-484.72	-42.67	0.00	584.90	0.572	0.000	65.38	0.00	0.0000	0.0000	0.0000	0.00
110	SEABED	-490.77	-42.67	0.00	590.95	0.572	0.000	65.38	0.00	0.0000	0.0000	0.0000	0.00
111	SEABED	-496.82	-42.67	0.00	597.00	0.572	0.000	65.38	0.00	0.0000	0.0000	0.0000	0.00
112	SEABED	-502.87	-42.67	0.00	603.05	0.572	0.000	65.38	0.00	0.0000	0.0000	0.0000	0.00
113	SEABED	-508.92	-42.67	0.00	609.10	0.572	0.000	65.38	0.00	0.0000	0.0000	0.0000	0.00
114	SEABED	-514.97	-42.67	0.00	615.15	0.572	0.000	65.38	0.00	0.0000	0.0000	0.0000	0.00
115	SEABED	-521.02	-42.67	0.00	621.20	0.572	0.000	65.38	0.00	0.0000	0.0000	0.0000	0.00
116	SEABED	-527.07	-42.67	0.00	627.25	0.572	0.000	65.38	0.00	0.0000	0.0000	0.0000	0.00
117	SEABED	-533.12	-42.67	0.00	633.30	0.572	0.000	65.38	0.00	0.0000	0.0000	0.0000	0.00
118	SEABED	-539.17	-42.67	0.00	639.35	0.572	0.000	65.38	0.00	0.0000	0.0000	0.0000	0.00
119	SEABED	-545.22	-42.67	0.00	645.40	0.572	0.000	65.38	0.00	0.0000	0.0000	0.0000	0.00
120	SEABED	-551.27	-42.67	0.00	651.45	0.572	0.000	65.38	0.00	0.0000	0.0000	0.0000	0.00
121	SEABED	-557.32	-42.67	0.00	657.50	0.572	0.000	65.38	0.00	0.0000	0.0000	0.0000	0.00
122	SEABED	-563.37	-42.67	0.00	663.55	0.572	0.000	65.38	0.00	0.0000	0.0000	0.0000	0.00
123	SEABED	-569.42	-42.67	0.00	669.60	0.570	0.000	65.38	0.00	0.0000	0.0000	0.0000	0.00
124	SEABED	-575.47	-42.67	-0.01	675.65	0.451	0.000	65.38	0.00	0.0000	0.0000	0.0000	0.00
125	SEABED	-579.83	-42.67	-0.12	680.01	0.000	0.000	65.38	0.00	0.0000	0.0000	0.0000	0.00

S T A T I C P I P E C O O R D I N A T E S, F O R C E S A N D S T R A I N S

NODE NO.	PIPE SECTION	X COORD (M)	Y COORD (M)	VERT ANGLE (DEG)	PIPE LENGTH (M)	SUPPORT REACTION (KN)	SEPARA -TION (M)	AXIAL TENSION (KN)	BENDING MOMENT (KN-M)	TENSILE STRAIN (PCT)	BENDING STRAIN (PCT)	TOTAL STRAIN (PCT)	PERCNT ALLOW (PCT)
1	LAYBARGE	96.31	6.41	1.93	0.00	9.929	0.000	0.00	2.74	0.0000	0.0021	0.0021	0.00
3	LAYBARGE	84.28	6.05	1.58	12.04	24.168	0.000	-0.73	-19.23	0.0000	-0.0144	0.0144	0.00
5	LAYBARGE	73.45	5.73	1.90	22.87	24.322	0.000	-1.39	-29.30	-0.0001	-0.0219	0.0220	0.00
7	TENSIONR	60.10	5.24	2.31	36.23	32.091	0.000	70.92	-23.79	0.0033	-0.0178	0.0211	0.00
9	LAYBARGE	51.10	4.87	2.20	45.24	0.000	0.000	70.19	30.52	0.0033	0.0228	0.0261	0.00
10	LAYBARGE	46.45	4.70	1.92	49.89	10.593	0.000	69.88	12.10	0.0033	0.0090	0.0123	0.00
12	LAYBARGE	35.36	4.31	2.59	60.99	27.658	0.000	68.88	-78.43	0.0032	-0.0587	0.0619	0.00
14	LAYBARGE	25.34	3.64	5.34	71.03	44.461	0.000	67.22	-141.93	0.0031	-0.1062	0.1093	0.00
16	LAYBARGE	19.32	2.99	6.68	77.09	0.000	0.000	66.42	-32.27	0.0031	-0.0241	0.0272	0.00
17	LAYBARGE	8.88	1.76	6.64	87.60	11.787	0.000	63.97	1.89	0.0030	0.0014	0.0044	0.00
19	LAYBARGE	4.87	1.29	6.62	91.63	0.000	0.000	63.03	0.00	0.0029	0.0000	0.0029	0.00
20	LAYBARGE	3.08	1.19	3.19	93.43	0.000	0.568	63.14	0.00	0.0000	0.0000	0.0000	0.00
24	STINGER	-7.48	0.61	3.01	104.00	0.000	0.874	63.12	0.00	0.0000	0.0000	0.0000	0.00
26	STINGER	-16.58	0.15	2.81	113.11	0.000	0.134	63.11	0.00	0.0000	0.0000	0.0000	0.00
29	STINGER	-26.47	-0.32	4.15	123.02	3.174	0.000	63.09	0.00	0.0000	0.0000	0.0000	0.00
31	STINGER	-37.35	-1.38	8.33	133.95	6.120	0.000	63.03	0.00	0.0000	0.0000	0.0000	0.00
33	STINGER	-40.32	-1.96	11.10	136.98	0.000	0.160	63.10	0.00	0.0000	0.0000	0.0000	0.00
35	SAGBEND	-46.48	-3.17	11.09	143.25	0.000	0.000	63.10	0.00	0.0000	0.0000	0.0000	0.00
36	SAGBEND	-52.42	-4.33	11.08	149.30	0.000	0.000	63.09	0.00	0.0000	0.0000	0.0000	0.00
37	SAGBEND	-58.35	-5.49	11.06	155.35	0.000	0.000	63.09	0.00	0.0000	0.0000	0.0000	0.00
38	SAGBEND	-64.29	-6.65	11.05	161.40	0.000	0.000	63.09	0.00	0.0000	0.0000	0.0000	0.00
39	SAGBEND	-70.23	-7.81	11.04	167.45	0.000	0.000	63.08	0.00	0.0000	0.0000	0.0000	0.00
40	SAGBEND	-76.17	-8.97	11.02	173.50	0.000	0.000	63.08	0.00	0.0000	0.0000	0.0000	0.00
41	SAGBEND	-82.11	-10.13	11.01	179.55	0.000	0.000	63.08	0.00	0.0000	0.0000	0.0000	0.00
42	SAGBEND	-88.04	-11.28	10.99	185.60	0.000	0.000	63.08	0.00	0.0000	0.0000	0.0000	0.00
43	SAGBEND	-93.98	-12.43	10.98	191.65	0.000	0.000	63.07	0.00	0.0000	0.0000	0.0000	0.00
44	SAGBEND	-99.92	-13.59	10.97	197.70	0.000	0.000	63.07	0.00	0.0000	0.0000	0.0000	0.00
45	SAGBEND	-105.86	-14.74	10.95	203.75	0.000	0.000	63.07	0.00	0.0000	0.0000	0.0000	0.00
46	SAGBEND	-111.80	-15.88	10.94	209.80	0.000	0.000	63.06	0.00	0.0000	0.0000	0.0000	0.00
47	SAGBEND	-117.74	-17.03	10.92	215.85	0.000	0.000	63.06	0.00	0.0000	0.0000	0.0000	0.00
48	SAGBEND	-123.68	-18.18	10.91	221.90	0.000	0.000	63.06	0.00	0.0000	0.0000	0.0000	0.00
49	SAGBEND	-129.62	-19.32	10.89	227.95	0.000	0.000	63.05	0.00	0.0000	0.0000	0.0000	0.00
50	SAGBEND	-135.57	-20.46	10.88	234.00	0.000	0.000	63.05	0.00	0.0000	0.0000	0.0000	0.00
51	SAGBEND	-141.51	-21.61	10.87	240.05	0.000	0.000	63.05	0.00	0.0000	0.0000	0.0000	0.00
52	SAGBEND	-147.45	-22.74	10.85	246.10	0.000	0.000	63.05	0.00	0.0000	0.0000	0.0000	0.00
53	SAGBEND	-153.39	-23.88	10.84	252.15	0.000	0.000	63.04	0.00	0.0000	0.0000	0.0000	0.00
54	SAGBEND	-159.33	-25.02	10.82	258.20	0.000	0.000	63.04	0.00	0.0000	0.0000	0.0000	0.00
55	SAGBEND	-165.28	-26.16	10.81	264.25	0.000	0.000	63.04	0.00	0.0000	0.0000	0.0000	0.00
56	SAGBEND	-171.22	-27.29	10.80	270.30	0.000	0.000	63.03	0.00	0.0000	0.0000	0.0000	0.00
57	SAGBEND	-177.16	-28.42	10.78	276.35	0.000	0.000	63.03	0.00	0.0000	0.0000	0.0000	0.00
58	SAGBEND	-183.10	-29.55	10.77	282.40	0.000	0.000	63.03	0.00	0.0000	0.0000	0.0000	0.00
59	SAGBEND	-186.84	-30.26	10.76	286.21	0.000	0.000	63.03	0.00	0.0000	0.0000	0.0000	0.00
60	SAGBEND	-190.58	-30.97	10.75	290.01	0.000	0.000	63.02	0.00	0.0000	0.0000	0.0000	0.00

S T A T I C P I P E C O O R D I N A T E S, F O R C E S A N D S T R A I N S

NODE NO.	PIPE SECTION	X COORD (M)	Y COORD (M)	VERT ANGLE (DEG)	PIPE LENGTH (M)	SUPPORT REACTION (KN)	SEPARA -TION (M)	AXIAL TENSION (KN)	BENDING MOMENT (KN-M)	TENSILE STRAIN (PCT)	BENDING STRAIN (PCT)	TOTAL STRAIN (PCT)	PERCNT ALLOW (PCT)
61	SAGBEND	-194.99	-31.80	10.37	294.50	0.000	0.000	62.95	0.00	0.0000	0.0000	0.0000	0.00
62	SAGBEND	-200.95	-32.86	9.86	300.55	0.000	0.000	62.85	0.00	0.0000	0.0000	0.0000	0.00
63	SAGBEND	-206.92	-33.87	9.34	306.60	0.000	0.000	62.75	0.00	0.0000	0.0000	0.0000	0.00
64	SAGBEND	-212.89	-34.82	8.83	312.65	0.000	0.000	62.66	0.00	0.0000	0.0000	0.0000	0.00
65	SAGBEND	-218.87	-35.72	8.31	318.71	0.000	0.000	62.57	0.00	0.0000	0.0000	0.0000	0.00
66	SAGBEND	-224.86	-36.57	7.79	324.76	0.000	0.000	62.49	0.00	0.0000	0.0000	0.0000	0.00
67	SAGBEND	-230.86	-37.36	7.27	330.81	0.000	0.000	62.42	0.00	0.0000	0.0000	0.0000	0.00
68	SAGBEND	-236.87	-38.10	6.75	336.86	0.000	0.000	62.35	0.00	0.0000	0.0000	0.0000	0.00
69	SAGBEND	-242.88	-38.79	6.23	342.91	0.000	0.000	62.29	0.00	0.0000	0.0000	0.0000	0.00
70	SAGBEND	-248.89	-39.42	5.70	348.96	0.000	0.000	62.23	0.00	0.0000	0.0000	0.0000	0.00
71	SAGBEND	-254.92	-39.99	5.18	355.01	0.000	0.000	62.17	0.00	0.0000	0.0000	0.0000	0.00
72	SAGBEND	-260.94	-40.51	4.65	361.06	0.000	0.000	62.12	0.00	0.0000	0.0000	0.0000	0.00
73	SAGBEND	-266.98	-40.97	4.13	367.11	0.000	0.000	62.08	0.00	0.0000	0.0000	0.0000	0.00
74	SAGBEND	-273.01	-41.38	3.60	373.16	0.000	0.000	62.04	0.00	0.0000	0.0000	0.0000	0.00
75	SAGBEND	-279.05	-41.73	3.07	379.21	0.000	0.000	62.01	0.00	0.0000	0.0000	0.0000	0.00
76	SAGBEND	-285.10	-42.03	2.54	385.26	0.000	0.000	61.98	0.00	0.0000	0.0000	0.0000	0.00
77	SAGBEND	-291.14	-42.27	2.02	391.31	0.000	0.000	61.96	0.00	0.0000	0.0000	0.0000	0.00
78	SAGBEND	-297.19	-42.45	1.49	397.36	0.000	0.000	61.94	0.00	0.0000	0.0000	0.0000	0.00
79	SAGBEND	-303.24	-42.58	0.96	403.41	0.000	0.000	61.93	0.00	0.0000	0.0000	0.0000	0.00
80	SAGBEND	-309.29	-42.65	0.44	409.46	0.012	0.000	61.92	-0.01	0.0000	0.0000	0.0000	0.00
81	SEABED	-315.34	-42.67	0.01	415.51	0.389	0.000	61.92	-0.01	0.0000	0.0000	0.0000	0.00
82	SEABED	-321.39	-42.67	0.00	421.56	0.567	0.000	61.92	0.00	0.0000	0.0000	0.0000	0.00
83	SEABED	-327.44	-42.67	0.00	427.61	0.572	0.000	61.92	0.00	0.0000	0.0000	0.0000	0.00
84	SEABED	-333.49	-42.67	0.00	433.66	0.572	0.000	61.92	0.00	0.0000	0.0000	0.0000	0.00
85	SEABED	-339.54	-42.67	0.00	439.71	0.572	0.000	61.92	0.00	0.0000	0.0000	0.0000	0.00
86	SEABED	-345.59	-42.67	0.00	445.76	0.572	0.000	61.92	0.00	0.0000	0.0000	0.0000	0.00
87	SEABED	-351.64	-42.67	0.00	451.81	0.572	0.000	61.92	0.00	0.0000	0.0000	0.0000	0.00
88	SEABED	-357.69	-42.67	0.00	457.86	0.572	0.000	61.92	0.00	0.0000	0.0000	0.0000	0.00
89	SEABED	-363.74	-42.67	0.00	463.91	0.572	0.000	61.92	0.00	0.0000	0.0000	0.0000	0.00
90	SEABED	-369.79	-42.67	0.00	469.96	0.572	0.000	61.92	0.00	0.0000	0.0000	0.0000	0.00
91	SEABED	-375.84	-42.67	0.00	476.01	0.572	0.000	61.92	0.00	0.0000	0.0000	0.0000	0.00
92	SEABED	-381.89	-42.67	0.00	482.06	0.572	0.000	61.92	0.00	0.0000	0.0000	0.0000	0.00
93	SEABED	-387.94	-42.67	0.00	488.11	0.572	0.000	61.92	0.00	0.0000	0.0000	0.0000	0.00
94	SEABED	-393.99	-42.67	0.00	494.16	0.572	0.000	61.92	0.00	0.0000	0.0000	0.0000	0.00
95	SEABED	-400.04	-42.67	0.00	500.21	0.572	0.000	61.92	0.00	0.0000	0.0000	0.0000	0.00
96	SEABED	-406.09	-42.67	0.00	506.26	0.572	0.000	61.92	0.00	0.0000	0.0000	0.0000	0.00
97	SEABED	-412.14	-42.67	0.00	512.31	0.572	0.000	61.92	0.00	0.0000	0.0000	0.0000	0.00
98	SEABED	-418.19	-42.67	0.00	518.36	0.572	0.000	61.92	0.00	0.0000	0.0000	0.0000	0.00
99	SEABED	-424.24	-42.67	0.00	524.41	0.572	0.000	61.92	0.00	0.0000	0.0000	0.0000	0.00
100	SEABED	-430.29	-42.67	0.00	530.46	0.572	0.000	61.92	0.00	0.0000	0.0000	0.0000	0.00
101	SEABED	-436.34	-42.67	0.00	536.51	0.572	0.000	61.92	0.00	0.0000	0.0000	0.0000	0.00
102	SEABED	-442.39	-42.67	0.00	542.56	0.572	0.000	61.92	0.00	0.0000	0.0000	0.0000	0.00
103	SEABED	-448.44	-42.67	0.00	548.61	0.572	0.000	61.92	0.00	0.0000	0.0000	0.0000	0.00
104	SEABED	-454.49	-42.67	0.00	554.66	0.572	0.000	61.92	0.00	0.0000	0.0000	0.0000	0.00

S T A T I C P I P E C O O R D I N A T E S, F O R C E S A N D S T R A I N S

NODE NO.	PIPE SECTION	X COORD (M)	Y COORD (M)	VERT ANGLE (DEG)	PIPE LENGTH (M)	SUPPORT REACTION (KN)	SEPARA -TION (M)	AXIAL TENSION (KN)	BENDING MOMENT (KN-M)	TENSILE STRAIN (PCT)	BENDING STRAIN (PCT)	TOTAL STRAIN (PCT)	PERCNT ALLOW (PCT)
105	SEABED	-460.54	-42.67	0.00	560.71	0.572	0.000	61.92	0.00	0.0000	0.0000	0.0000	0.00
106	SEABED	-466.59	-42.67	0.00	566.76	0.572	0.000	61.92	0.00	0.0000	0.0000	0.0000	0.00
107	SEABED	-472.64	-42.67	0.00	572.81	0.572	0.000	61.92	0.00	0.0000	0.0000	0.0000	0.00
108	SEABED	-478.69	-42.67	0.00	578.86	0.572	0.000	61.92	0.00	0.0000	0.0000	0.0000	0.00
109	SEABED	-484.74	-42.67	0.00	584.91	0.572	0.000	61.92	0.00	0.0000	0.0000	0.0000	0.00
110	SEABED	-490.79	-42.67	0.00	590.96	0.572	0.000	61.92	0.00	0.0000	0.0000	0.0000	0.00
111	SEABED	-496.84	-42.67	0.00	597.01	0.572	0.000	61.92	0.00	0.0000	0.0000	0.0000	0.00
112	SEABED	-502.89	-42.67	0.00	603.06	0.572	0.000	61.92	0.00	0.0000	0.0000	0.0000	0.00
113	SEABED	-508.94	-42.67	0.00	609.11	0.572	0.000	61.92	0.00	0.0000	0.0000	0.0000	0.00
114	SEABED	-514.99	-42.67	0.00	615.16	0.572	0.000	61.92	0.00	0.0000	0.0000	0.0000	0.00
115	SEABED	-521.04	-42.67	0.00	621.21	0.572	0.000	61.92	0.00	0.0000	0.0000	0.0000	0.00
116	SEABED	-527.09	-42.67	0.00	627.26	0.572	0.000	61.92	0.00	0.0000	0.0000	0.0000	0.00
117	SEABED	-533.14	-42.67	0.00	633.31	0.572	0.000	61.92	0.00	0.0000	0.0000	0.0000	0.00
118	SEABED	-539.19	-42.67	0.00	639.36	0.572	0.000	61.92	0.00	0.0000	0.0000	0.0000	0.00
119	SEABED	-545.24	-42.67	0.00	645.41	0.572	0.000	61.92	0.00	0.0000	0.0000	0.0000	0.00
120	SEABED	-551.29	-42.67	0.00	651.46	0.572	0.000	61.92	0.00	0.0000	0.0000	0.0000	0.00
121	SEABED	-557.34	-42.67	0.00	657.51	0.572	0.000	61.92	0.00	0.0000	0.0000	0.0000	0.00
122	SEABED	-563.39	-42.67	0.00	663.56	0.572	0.000	61.92	0.00	0.0000	0.0000	0.0000	0.00
123	SEABED	-569.44	-42.67	0.00	669.61	0.572	0.000	61.92	0.00	0.0000	0.0000	0.0000	0.00
124	SEABED	-575.49	-42.67	0.00	675.66	0.572	0.000	61.92	0.00	0.0000	0.0000	0.0000	0.00
125	SEABED	-581.54	-42.67	0.00	681.71	0.480	0.000	61.92	0.00	0.0000	0.0000	0.0000	0.00
126	SEABED	-585.69	-42.67	-0.01	685.86	0.353	0.000	61.92	0.00	0.0000	0.0000	0.0000	0.00

127	SEABED	-589.84	-42.67	-0.12	690.01	0.000	0.000	61.92	0.00	0.0000	0.0000	0.0000	0.00

S T A T I C P I P E C O O R D I N A T E S, F O R C E S A N D S T R A I N S

NODE NO.	PIPE SECTION	X COORD (M)	Y COORD (M)	VERT ANGLE (DEG)	PIPE LENGTH (M)	SUPPORT REACTION (KN)	SEPARA -TION (M)	AXIAL TENSION (KN)	BENDING MOMENT (KN-M)	TENSILE STRAIN (PCT)	BENDING STRAIN (PCT)	TOTAL STRAIN (PCT)	PERCNT ALLOW (PCT)
1	LAYBARGE	96.31	6.41	1.93	0.00	9.927	0.000	0.00	2.74	0.0000	0.0021	0.0021	0.00
3	LAYBARGE	84.28	6.05	1.58	12.04	24.177	0.000	-0.73	-19.25	0.0000	-0.0144	0.0144	0.00
5	LAYBARGE	73.45	5.73	1.90	22.87	24.292	0.000	-1.39	-29.24	-0.0001	-0.0219	0.0219	0.00
7	TENSIONR	60.10	5.24	2.31	36.23	32.193	0.000	70.92	-23.94	0.0033	-0.0179	0.0212	0.00
9	LAYBARGE	51.10	4.87	2.20	45.24	0.000	0.000	70.19	31.01	0.0033	0.0232	0.0265	0.00
10	LAYBARGE	46.45	4.70	1.91	49.89	10.090	0.000	69.87	12.85	0.0033	0.0096	0.0129	0.00
12	LAYBARGE	35.36	4.31	2.62	60.99	29.960	0.000	68.86	-80.48	0.0032	-0.0602	0.0634	0.00
14	LAYBARGE	25.34	3.64	5.23	71.03	38.718	0.000	67.32	-128.39	0.0031	-0.0960	0.0992	0.00
16	LAYBARGE	19.31	3.01	6.51	77.09	0.000	0.000	66.44	-39.35	0.0031	-0.0294	0.0325	0.00
17	LAYBARGE	8.88	1.76	7.20	87.60	30.492	0.000	63.91	-41.78	0.0030	-0.0312	0.0342	0.00
19	LAYBARGE	4.88	1.24	7.39	91.63	0.000	0.000	62.93	7.88	0.0029	0.0059	0.0088	0.00
20	LAYBARGE	3.06	1.01	7.32	93.47	0.000	0.388	62.45	23.51	0.0029	0.0176	0.0205	0.00
24	STINGER	-7.43	-0.26	6.57	104.03	2.559	0.000	60.17	0.00	0.0028	0.0000	0.0028	0.00
26	STINGER	-16.57	0.02	0.05	113.19	3.817	0.000	60.78	0.00	0.0000	0.0000	0.0000	0.00
29	STINGER	-26.49	-0.30	3.56	123.11	3.701	0.000	60.78	0.00	0.0000	0.0000	0.0000	0.00
31	STINGER	-37.37	-1.31	8.07	134.04	5.919	0.000	60.74	0.00	0.0000	0.0000	0.0000	0.00
33	STINGER	-40.34	-1.88	10.84	137.07	0.000	0.159	60.81	0.00	0.0000	0.0000	0.0000	0.00
35	SAGBEND	-46.48	-3.05	10.83	143.32	0.000	0.000	60.80	0.00	0.0000	0.0000	0.0000	0.00
36	SAGBEND	-52.43	-4.19	10.82	149.37	0.000	0.000	60.80	0.00	0.0000	0.0000	0.0000	0.00
37	SAGBEND	-58.37	-5.32	10.80	155.42	0.000	0.000	60.80	0.00	0.0000	0.0000	0.0000	0.00
38	SAGBEND	-64.31	-6.46	10.79	161.47	0.000	0.000	60.79	0.00	0.0000	0.0000	0.0000	0.00
39	SAGBEND	-70.25	-7.59	10.78	167.52	0.000	0.000	60.79	0.00	0.0000	0.0000	0.0000	0.00
40	SAGBEND	-76.20	-8.72	10.76	173.57	0.000	0.000	60.79	0.00	0.0000	0.0000	0.0000	0.00
41	SAGBEND	-82.14	-9.85	10.75	179.62	0.000	0.000	60.79	0.00	0.0000	0.0000	0.0000	0.00
42	SAGBEND	-88.09	-10.98	10.73	185.67	0.000	0.000	60.78	0.00	0.0000	0.0000	0.0000	0.00
43	SAGBEND	-94.03	-12.10	10.72	191.72	0.000	0.000	60.78	0.00	0.0000	0.0000	0.0000	0.00
44	SAGBEND	-99.97	-13.23	10.70	197.77	0.000	0.000	60.78	0.00	0.0000	0.0000	0.0000	0.00
45	SAGBEND	-105.92	-14.35	10.69	203.82	0.000	0.000	60.77	0.00	0.0000	0.0000	0.0000	0.00
46	SAGBEND	-111.86	-15.47	10.67	209.87	0.000	0.000	60.77	0.00	0.0000	0.0000	0.0000	0.00
47	SAGBEND	-117.81	-16.59	10.66	215.92	0.000	0.000	60.77	0.00	0.0000	0.0000	0.0000	0.00
48	SAGBEND	-123.76	-17.71	10.64	221.97	0.000	0.000	60.77	0.00	0.0000	0.0000	0.0000	0.00
49	SAGBEND	-129.70	-18.82	10.63	228.02	0.000	0.000	60.76	0.00	0.0000	0.0000	0.0000	0.00
50	SAGBEND	-135.65	-19.94	10.61	234.07	0.000	0.000	60.76	0.00	0.0000	0.0000	0.0000	0.00
51	SAGBEND	-141.59	-21.05	10.60	240.12	0.000	0.000	60.76	0.00	0.0000	0.0000	0.0000	0.00
52	SAGBEND	-147.54	-22.17	10.59	246.17	0.000	0.000	60.75	0.00	0.0000	0.0000	0.0000	0.00
53	SAGBEND	-153.49	-23.28	10.57	252.22	0.000	0.000	60.75	0.00	0.0000	0.0000	0.0000	0.00
54	SAGBEND	-159.44	-24.39	10.56	258.27	0.000	0.000	60.75	0.00	0.0000	0.0000	0.0000	0.00
55	SAGBEND	-165.38	-25.49	10.54	264.32	0.000	0.000	60.75	0.00	0.0000	0.0000	0.0000	0.00
56	SAGBEND	-171.33	-26.60	10.53	270.37	0.000	0.000	60.74	0.00	0.0000	0.0000	0.0000	0.00
57	SAGBEND	-177.28	-27.70	10.51	276.42	0.000	0.000	60.74	0.00	0.0000	0.0000	0.0000	0.00
58	SAGBEND	-183.23	-28.81	10.50	282.48	0.000	0.000	60.74	0.00	0.0000	0.0000	0.0000	0.00
59	SAGBEND	-189.18	-29.91	10.48	288.53	0.000	0.000	60.73	0.00	0.0000	0.0000	0.0000	0.00
60	SAGBEND	-195.13	-31.01	10.47	294.58	0.000	0.000	60.73	0.00	0.0000	0.0000	0.0000	0.00

S T A T I C P I P E C O O R D I N A T E S, F O R C E S A N D S T R A I N S

NODE NO.	PIPE SECTION	X COORD (M)	Y COORD (M)	VERT ANGLE (DEG)	PIPE LENGTH (M)	SUPPORT REACTION (KN)	SEPARA -TION (M)	AXIAL TENSION (KN)	BENDING MOMENT (KN-M)	TENSILE STRAIN (PCT)	BENDING STRAIN (PCT)	TOTAL STRAIN (PCT)	PERCNT ALLOW (PCT)
61	SAGBEND	-200.54	-32.01	10.46	300.08	0.000	0.000	60.73	0.00	0.0000	0.0000	0.0000	0.00
62	SAGBEND	-207.03	-33.17	9.88	306.68	0.000	0.000	60.62	0.00	0.0000	0.0000	0.0000	0.00
63	SAGBEND	-213.00	-34.18	9.34	312.73	0.000	0.000	60.52	0.00	0.0000	0.0000	0.0000	0.00
64	SAGBEND	-218.97	-35.14	8.81	318.78	0.000	0.000	60.43	0.00	0.0000	0.0000	0.0000	0.00
65	SAGBEND	-224.95	-36.03	8.27	324.83	0.000	0.000	60.35	0.00	0.0000	0.0000	0.0000	0.00
66	SAGBEND	-230.95	-36.88	7.73	330.88	0.000	0.000	60.27	0.00	0.0000	0.0000	0.0000	0.00
67	SAGBEND	-236.94	-37.66	7.19	336.93	0.000	0.000	60.19	0.00	0.0000	0.0000	0.0000	0.00
68	SAGBEND	-242.95	-38.39	6.65	342.98	0.000	0.000	60.12	0.00	0.0000	0.0000	0.0000	0.00
69	SAGBEND	-248.96	-39.06	6.11	349.03	0.000	0.000	60.06	0.00	0.0000	0.0000	0.0000	0.00
70	SAGBEND	-254.98	-39.68	5.57	355.08	0.000	0.000	60.00	0.00	0.0000	0.0000	0.0000	0.00
71	SAGBEND	-261.01	-40.24	5.02	361.13	0.000	0.000	59.95	0.00	0.0000	0.0000	0.0000	0.00
72	SAGBEND	-267.04	-40.74	4.48	367.18	0.000	0.000	59.90	0.00	0.0000	0.0000	0.0000	0.00
73	SAGBEND	-273.07	-41.18	3.93	373.23	0.000	0.000	59.86	0.00	0.0000	0.0000	0.0000	0.00
74	SAGBEND	-279.11	-41.57	3.38	379.28	0.000	0.000	59.82	0.00	0.0000	0.0000	0.0000	0.00
75	SAGBEND	-285.15	-41.90	2.84	385.33	0.000	0.000	59.79	0.00	0.0000	0.0000	0.0000	0.00
76	SAGBEND	-291.19	-42.17	2.29	391.38	0.000	0.000	59.77	0.00	0.0000	0.0000	0.0000	0.00
77	SAGBEND	-297.24	-42.38	1.74	397.43	0.000	0.000	59.75	0.00	0.0000	0.0000	0.0000	0.00
78	SAGBEND	-303.29	-42.53	1.19	403.48	0.000	0.000	59.73	0.00	0.0000	0.0000	0.0000	0.00
79	SAGBEND	-309.34	-42.63	0.64	409.53	0.000	0.000	59.72	0.00	0.0000	0.0000	0.0000	0.00
80	SEABED	-315.39	-42.67	0.09	415.58	0.206	0.000	59.72	0.00	0.0000	0.0000	0.0000	0.00
81	SEABED	-321.44	-42.67	0.01	421.63	0.552	0.000	59.72	0.00	0.0000	0.0000	0.0000	0.00
82	SEABED	-327.49	-42.67	0.00	427.68	0.572	0.000	59.72	0.00	0.0000	0.0000	0.0000	0.00
83	SEABED	-333.54	-42.67	0.00	433.73	0.572	0.000	59.72	0.00	0.0000	0.0000	0.0000	0.00
84	SEABED	-339.59	-42.67	0.00	439.78	0.572	0.000	59.72	0.00	0.0000	0.0000	0.0000	0.00
85	SEABED	-345.64	-42.67	0.00	445.83	0.572	0.000	59.72	0.00	0.0000	0.0000	0.0000	0.00
86	SEABED	-351.69	-42.67	0.00	451.88	0.572	0.000	59.72	0.00	0.0000	0.0000	0.0000	0.00
87	SEABED	-357.74	-42.67	0.00	457.93	0.572	0.000	59.72	0.00	0.0000	0.0000	0.0000	0.00
88	SEABED	-363.79	-42.67	0.00	463.98	0.572	0.000	59.72	0.00	0.0000	0.0000	0.0000	0.00
89	SEABED	-369.84	-42.67	0.00	470.03	0.572	0.000	59.72	0.00	0.0000	0.0000	0.0000	0.00
90	SEABED	-375.89	-42.67	0.00	476.08	0.572	0.000	59.72	0.00	0.0000	0.0000	0.0000	0.00
91	SEABED	-381.94	-42.67	0.00	482.13	0.572	0.000	59.72	0.00	0.0000	0.0000	0.0000	0.00
92	SEABED	-387.99	-42.67	0.00	488.18	0.572	0.000	59.72	0.00	0.0000	0.0000	0.0000	0.00
93	SEABED	-394.04	-42.67	0.00	494.23	0.572	0.000	59.72	0.00	0.0000	0.0000	0.0000	0.00
94	SEABED	-400.09	-42.67	0.00	500.28	0.572	0.000	59.72	0.00	0.0000	0.0000	0.0000	0.00
95	SEABED	-406.14	-42.67	0.00	506.33	0.572	0.000	59.72	0.00	0.0000	0.0000	0.0000	0.00
96	SEABED	-412.19	-42.67	0.00	512.38	0.572	0.000	59.72	0.00	0.0000	0.0000	0.0000	0.00
97	SEABED	-418.24	-42.67	0.00	518.43	0.572	0.000	59.72	0.00	0.0000	0.0000	0.0000	0.00
98	SEABED	-424.29	-42.67	0.00	524.48	0.572	0.000	59.72	0.00	0.0000	0.0000	0.0000	0.00
99	SEABED	-430.34	-42.67	0.00	530.53	0.572	0.000	59.72	0.00	0.0000	0.0000	0.0000	0.00
100	SEABED	-436.39	-42.67	0.00	536.58	0.572	0.000	59.72	0.00	0.0000	0.0000	0.0000	0.00
101	SEABED	-442.44	-42.67	0.00	542.63	0.572	0.000	59.72	0.00	0.0000	0.0000	0.0000	0.00
102	SEABED	-448.49	-42.67	0.00	548.68	0.572	0.000	59.72	0.00	0.0000	0.0000	0.0000	0.00
103	SEABED	-454.54	-42.67	0.00	554.73	0.572	0.000	59.72	0.00	0.0000	0.0000	0.0000	0.00
104	SEABED	-460.59	-42.67	0.00	560.78	0.572	0.000	59.72	0.00	0.0000	0.0000	0.0000	0.00

S T A T I C P I P E C O O R D I N A T E S, F O R C E S A N D S T R A I N S

NODE NO.	PIPE SECTION	X COORD (M)	Y COORD (M)	VERT ANGLE (DEG)	PIPE LENGTH (M)	SUPPORT REACTION (KN)	SEPARA -TION (M)	AXIAL TENSION (KN)	BENDING MOMENT (KN-M)	TENSILE STRAIN (PCT)	BENDING STRAIN (PCT)	TOTAL STRAIN (PCT)	PERCNT ALLOW (PCT)
105	SEABED	-466.64	-42.67	0.00	566.83	0.572	0.000	59.72	0.00	0.0000	0.0000	0.0000	0.00
106	SEABED	-472.69	-42.67	0.00	572.88	0.572	0.000	59.72	0.00	0.0000	0.0000	0.0000	0.00
107	SEABED	-478.74	-42.67	0.00	578.93	0.572	0.000	59.72	0.00	0.0000	0.0000	0.0000	0.00
108	SEABED	-484.79	-42.67	0.00	584.98	0.572	0.000	59.72	0.00	0.0000	0.0000	0.0000	0.00
109	SEABED	-490.84	-42.67	0.00	591.03	0.572	0.000	59.72	0.00	0.0000	0.0000	0.0000	0.00
110	SEABED	-496.89	-42.67	0.00	597.08	0.572	0.000	59.72	0.00	0.0000	0.0000	0.0000	0.00
111	SEABED	-502.94	-42.67	0.00	603.13	0.572	0.000	59.72	0.00	0.0000	0.0000	0.0000	0.00
112	SEABED	-508.99	-42.67	0.00	609.18	0.572	0.000	59.72	0.00	0.0000	0.0000	0.0000	0.00
113	SEABED	-515.04	-42.67	0.00	615.23	0.572	0.000	59.72	0.00	0.0000	0.0000	0.0000	0.00
114	SEABED	-521.09	-42.67	0.00	621.28	0.572	0.000	59.72	0.00	0.0000	0.0000	0.0000	0.00
115	SEABED	-527.14	-42.67	0.00	627.33	0.572	0.000	59.72	0.00	0.0000	0.0000	0.0000	0.00
116	SEABED	-533.19	-42.67	0.00	633.38	0.572	0.000	59.72	0.00	0.0000	0.0000	0.0000	0.00
117	SEABED	-539.24	-42.67	0.00	639.43	0.572	0.000	59.72	0.00	0.0000	0.0000	0.0000	0.00
118	SEABED	-545.29	-42.67	0.00	645.48	0.572	0.000	59.72	0.00	0.0000	0.0000	0.0000	0.00
119	SEABED	-551.34	-42.67	0.00	651.53	0.572	0.000	59.72	0.00	0.0000	0.0000	0.0000	0.00
120	SEABED	-557.39	-42.67	0.00	657.58	0.572	0.000	59.72	0.00	0.0000	0.0000	0.0000	0.00
121	SEABED	-563.44	-42.67	0.00	663.63	0.572	0.000	59.72	0.00	0.0000	0.0000	0.0000	0.00
122	SEABED	-569.49	-42.67	0.00	669.68	0.572	0.000	59.72	0.00	0.0000	0.0000	0.0000	0.00
123	SEABED	-575.54	-42.67	0.00	675.73	0.572	0.000	59.72	0.00	0.0000	0.0000	0.0000	0.00
124	SEABED	-581.59	-42.67	0.00	681.78	0.572	0.000	59.72	0.00	0.0000	0.0000	0.0000	0.00
125	SEABED	-587.64	-42.67	0.00	687.83	0.572	0.000	59.72	0.00	0.0000	0.0000	0.0000	0.00
126	SEABED	-593.69	-42.67	0.00	693.88	0.427	0.000	59.72	0.00	0.0000	0.0000	0.0000	0.00
127	SEABED	-596.79	-42.67	-0.02	696.98	0.246	0.000	59.72	0.00	0.0000	0.0000	0.0000	0.00
128	SEABED	-599.90	-42.67	-0.13	700.09	0.000	0.000	59.72	0.00	0.0000	0.0000	0.0000	0.00

S T A T I C P I P E C O O R D I N A T E S, F O R C E S A N D S T R A I N S

NODE NO.	PIPE SECTION	X COORD (M)	Y COORD (M)	VERT ANGLE (DEG)	PIPE LENGTH (M)	SUPPORT REACTION (KN)	SEPARA -TION (M)	AXIAL TENSION (KN)	BENDING MOMENT (KN-M)	TENSILE STRAIN (PCT)	BENDING STRAIN (PCT)	TOTAL STRAIN (PCT)	PERCNT ALLOW (PCT)
1	LAYBARGE	96.31	6.41	1.93	0.00	9.928	0.000	0.00	2.74	0.0000	0.0021	0.0021	0.00

3	LAYBARGE	84.28	6.05	1.58	12.04	24.174	0.000	-0.73	-19.24	0.0000	-0.0144	0.0144	0.00
5	LAYBARGE	73.45	5.73	1.90	22.87	24.301	0.000	-1.39	-29.26	-0.0001	-0.0219	0.0219	0.00
7	TENSIONR	60.10	5.24	2.31	36.23	32.183	0.000	82.62	-23.88	0.0038	-0.0179	0.0217	0.00
9	LAYBARGE	51.10	4.87	2.20	45.24	0.000	0.000	81.89	30.87	0.0038	0.0231	0.0269	0.00
10	LAYBARGE	46.45	4.70	1.91	49.89	9.993	0.000	81.57	12.92	0.0038	0.0097	0.0135	0.00
12	LAYBARGE	35.36	4.31	2.62	60.99	30.344	0.000	80.56	-80.51	0.0037	-0.0602	0.0640	0.00
14	LAYBARGE	25.34	3.64	5.23	71.03	39.332	0.000	79.01	-128.84	0.0037	-0.0964	0.1000	0.00
16	LAYBARGE	19.31	3.01	6.51	77.09	0.000	0.000	78.14	-39.12	0.0036	-0.0293	0.0329	0.00
17	LAYBARGE	8.88	1.76	7.20	87.60	30.568	0.000	75.61	-41.80	0.0035	-0.0313	0.0348	0.00
19	LAYBARGE	4.88	1.24	7.39	91.63	0.000	0.000	74.63	7.63	0.0035	0.0057	0.0092	0.00
20	LAYBARGE	3.06	1.01	7.32	93.47	0.000	0.389	74.15	23.15	0.0034	0.0173	0.0208	0.00
24	STINGER	-7.43	-0.26	6.58	104.04	0.752	0.000	71.86	0.00	0.0033	0.0000	0.0033	0.00
26	STINGER	-16.57	0.01	0.22	113.19	4.974	0.000	72.59	0.00	0.0000	0.0000	0.0000	0.00
29	STINGER	-26.48	-0.36	4.05	123.11	4.812	0.000	72.59	0.00	0.0000	0.0000	0.0000	0.00
31	STINGER	-37.35	-1.49	8.15	134.04	5.632	0.000	72.58	0.00	0.0000	0.0000	0.0000	0.00
33	STINGER	-40.33	-2.04	10.37	137.07	0.000	0.218	72.63	0.00	0.0000	0.0000	0.0000	0.00
35	SAGBEND	-46.48	-3.16	10.36	143.32	0.000	0.000	72.63	0.00	0.0000	0.0000	0.0000	0.00
36	SAGBEND	-52.43	-4.25	10.35	149.37	0.000	0.000	72.62	0.00	0.0000	0.0000	0.0000	0.00
37	SAGBEND	-58.39	-5.33	10.33	155.42	0.000	0.000	72.62	0.00	0.0000	0.0000	0.0000	0.00
38	SAGBEND	-64.34	-6.42	10.32	161.47	0.000	0.000	72.62	0.00	0.0000	0.0000	0.0000	0.00
39	SAGBEND	-70.29	-7.50	10.31	167.52	0.000	0.000	72.62	0.00	0.0000	0.0000	0.0000	0.00
40	SAGBEND	-76.24	-8.58	10.30	173.57	0.000	0.000	72.61	0.00	0.0000	0.0000	0.0000	0.00
41	SAGBEND	-82.20	-9.67	10.28	179.62	0.000	0.000	72.61	0.00	0.0000	0.0000	0.0000	0.00
42	SAGBEND	-88.15	-10.74	10.27	185.67	0.000	0.000	72.61	0.00	0.0000	0.0000	0.0000	0.00
43	SAGBEND	-94.10	-11.82	10.26	191.72	0.000	0.000	72.60	0.00	0.0000	0.0000	0.0000	0.00
44	SAGBEND	-100.06	-12.90	10.25	197.77	0.000	0.000	72.60	0.00	0.0000	0.0000	0.0000	0.00
45	SAGBEND	-106.01	-13.98	10.24	203.82	0.000	0.000	72.60	0.00	0.0000	0.0000	0.0000	0.00
46	SAGBEND	-111.96	-15.05	10.22	209.87	0.000	0.000	72.60	0.00	0.0000	0.0000	0.0000	0.00
47	SAGBEND	-117.92	-16.12	10.21	215.92	0.000	0.000	72.59	0.00	0.0000	0.0000	0.0000	0.00
48	SAGBEND	-123.87	-17.20	10.20	221.97	0.000	0.000	72.59	0.00	0.0000	0.0000	0.0000	0.00
49	SAGBEND	-129.83	-18.27	10.19	228.02	0.000	0.000	72.59	0.00	0.0000	0.0000	0.0000	0.00
50	SAGBEND	-135.78	-19.34	10.17	234.07	0.000	0.000	72.58	0.00	0.0000	0.0000	0.0000	0.00
51	SAGBEND	-141.74	-20.40	10.16	240.12	0.000	0.000	72.58	0.00	0.0000	0.0000	0.0000	0.00
52	SAGBEND	-147.69	-21.47	10.15	246.17	0.000	0.000	72.58	0.00	0.0000	0.0000	0.0000	0.00
53	SAGBEND	-153.65	-22.54	10.14	252.22	0.000	0.000	72.58	0.00	0.0000	0.0000	0.0000	0.00
54	SAGBEND	-159.60	-23.60	10.12	258.27	0.000	0.000	72.57	0.00	0.0000	0.0000	0.0000	0.00
55	SAGBEND	-165.56	-24.66	10.11	264.32	0.000	0.000	72.57	0.00	0.0000	0.0000	0.0000	0.00
56	SAGBEND	-171.51	-25.72	10.10	270.37	0.000	0.000	72.57	0.00	0.0000	0.0000	0.0000	0.00
57	SAGBEND	-177.47	-26.78	10.09	276.42	0.000	0.000	72.56	0.00	0.0000	0.0000	0.0000	0.00
58	SAGBEND	-183.43	-27.84	10.08	282.47	0.000	0.000	72.56	0.00	0.0000	0.0000	0.0000	0.00
59	SAGBEND	-189.38	-28.90	10.06	288.52	0.000	0.000	72.56	0.00	0.0000	0.0000	0.0000	0.00
60	SAGBEND	-195.34	-29.96	10.05	294.57	0.000	0.000	72.56	0.00	0.0000	0.0000	0.0000	0.00

S T A T I C P I P E C O O R D I N A T E S, F O R C E S A N D S T R A I N S

NODE NO.	PIPE SECTION	X COORD (M)	Y COORD (M)	VERT ANGLE (DEG)	PIPE LENGTH (M)	SUPPORT REACTION (KN)	SEPARA -TION (M)	AXIAL TENSION (KN)	BENDING MOMENT (KN-M)	TENSILE STRAIN (PCT)	BENDING STRAIN (PCT)	TOTAL STRAIN (PCT)	PERCNT ALLOW (PCT)
61	SAGBEND	-200.76	-30.92	10.04	300.08	0.000	0.000	72.55	0.00	0.0000	0.0000	0.0000	0.00
62	SAGBEND	-207.26	-32.04	9.56	306.67	0.000	0.000	72.45	0.00	0.0000	0.0000	0.0000	0.00
63	SAGBEND	-213.23	-33.02	9.11	312.72	0.000	0.000	72.36	0.00	0.0000	0.0000	0.0000	0.00
64	SAGBEND	-219.21	-33.96	8.66	318.77	0.000	0.000	72.27	0.00	0.0000	0.0000	0.0000	0.00
65	SAGBEND	-225.19	-34.84	8.21	324.82	0.000	0.000	72.18	0.00	0.0000	0.0000	0.0000	0.00
66	SAGBEND	-231.18	-35.68	7.76	330.87	0.000	0.000	72.10	0.00	0.0000	0.0000	0.0000	0.00
67	SAGBEND	-237.18	-36.48	7.31	336.93	0.000	0.000	72.03	0.00	0.0000	0.0000	0.0000	0.00
68	SAGBEND	-243.19	-37.22	6.86	342.98	0.000	0.000	71.96	0.00	0.0000	0.0000	0.0000	0.00
69	SAGBEND	-249.19	-37.92	6.41	349.03	0.000	0.000	71.89	0.00	0.0000	0.0000	0.0000	0.00
70	SAGBEND	-255.21	-38.57	5.95	355.08	0.000	0.000	71.83	0.00	0.0000	0.0000	0.0000	0.00
71	SAGBEND	-261.23	-39.18	5.50	361.13	0.000	0.000	71.77	0.00	0.0000	0.0000	0.0000	0.00
72	SAGBEND	-267.25	-39.73	5.04	367.18	0.000	0.000	71.72	0.00	0.0000	0.0000	0.0000	0.00
73	SAGBEND	-273.28	-40.24	4.59	373.23	0.000	0.000	71.67	0.00	0.0000	0.0000	0.0000	0.00
74	SAGBEND	-279.32	-40.70	4.13	379.28	0.000	0.000	71.63	0.00	0.0000	0.0000	0.0000	0.00
75	SAGBEND	-285.35	-41.11	3.68	385.33	0.000	0.000	71.59	0.00	0.0000	0.0000	0.0000	0.00
76	SAGBEND	-291.39	-41.48	3.22	391.38	0.000	0.000	71.56	0.00	0.0000	0.0000	0.0000	0.00
77	SAGBEND	-297.43	-41.79	2.76	397.43	0.000	0.000	71.53	0.00	0.0000	0.0000	0.0000	0.00
78	SAGBEND	-303.48	-42.06	2.30	403.48	0.000	0.000	71.50	0.00	0.0000	0.0000	0.0000	0.00
79	SAGBEND	-309.52	-42.28	1.85	409.53	0.000	0.000	71.48	0.00	0.0000	0.0000	0.0000	0.00
80	SAGBEND	-315.57	-42.45	1.39	415.58	0.000	0.000	71.46	0.00	0.0000	0.0000	0.0000	0.00
81	SAGBEND	-321.62	-42.57	0.93	421.63	0.000	0.000	71.45	0.00	0.0000	0.0000	0.0000	0.00
82	SAGBEND	-327.67	-42.65	0.47	427.68	0.001	0.000	71.45	0.00	0.0000	0.0000	0.0000	0.00
83	SEABED	-333.72	-42.67	0.04	433.73	0.284	0.000	71.44	0.00	0.0000	0.0000	0.0000	0.00
84	SEABED	-339.77	-42.67	0.00	439.78	0.559	0.000	71.44	0.00	0.0000	0.0000	0.0000	0.00
85	SEABED	-345.82	-42.67	0.00	445.83	0.572	0.000	71.44	0.00	0.0000	0.0000	0.0000	0.00
86	SEABED	-351.87	-42.67	0.00	451.88	0.572	0.000	71.44	0.00	0.0000	0.0000	0.0000	0.00
87	SEABED	-357.92	-42.67	0.00	457.93	0.572	0.000	71.44	0.00	0.0000	0.0000	0.0000	0.00
88	SEABED	-363.97	-42.67	0.00	463.98	0.572	0.000	71.44	0.00	0.0000	0.0000	0.0000	0.00
89	SEABED	-370.02	-42.67	0.00	470.03	0.572	0.000	71.44	0.00	0.0000	0.0000	0.0000	0.00
90	SEABED	-376.07	-42.67	0.00	476.08	0.572	0.000	71.44	0.00	0.0000	0.0000	0.0000	0.00
91	SEABED	-382.12	-42.67	0.00	482.13	0.572	0.000	71.44	0.00	0.0000	0.0000	0.0000	0.00
92	SEABED	-388.17	-42.67	0.00	488.18	0.572	0.000	71.44	0.00	0.0000	0.0000	0.0000	0.00
93	SEABED	-394.22	-42.67	0.00	494.23	0.572	0.000	71.44	0.00	0.0000	0.0000	0.0000	0.00
94	SEABED	-400.27	-42.67	0.00	500.28	0.572	0.000	71.44	0.00	0.0000	0.0000	0.0000	0.00
95	SEABED	-406.32	-42.67	0.00	506.33	0.572	0.000	71.44	0.00	0.0000	0.0000	0.0000	0.00
96	SEABED	-412.37	-42.67	0.00	512.38	0.572	0.000	71.44	0.00	0.0000	0.0000	0.0000	0.00
97	SEABED	-418.42	-42.67	0.00	518.43	0.572	0.000	71.44	0.00	0.0000	0.0000	0.0000	0.00
98	SEABED	-424.47	-42.67	0.00	524.48	0.572	0.000	71.44	0.00	0.0000	0.0000	0.0000	0.00
99	SEABED	-430.52	-42.67	0.00	530.53	0.572	0.000	71.44	0.00	0.0000	0.0000	0.0000	0.00
100	SEABED	-436.57	-42.67	0.00	536.58	0.572	0.000	71.44	0.00	0.0000	0.0000	0.0000	0.00
101	SEABED	-442.62	-42.67	0.00	542.63	0.572	0.000	71.44	0.00	0.0000	0.0000	0.0000	0.00
102	SEABED	-448.67	-42.67	0.00	548.68	0.572	0.000	71.44	0.00	0.0000	0.0000	0.0000	0.00
103	SEABED	-454.72	-42.67	0.00	554.73	0.572	0.000	71.44	0.00	0.0000	0.0000	0.0000	0.00
104	SEABED	-460.77	-42.67	0.00	560.78	0.572	0.000	71.44	0.00	0.0000	0.0000	0.0000	0.00

S T A T I C P I P E C O O R D I N A T E S, F O R C E S A N D S T R A I N S

NODE NO.	PIPE SECTION	X COORD (M)	Y COORD (M)	VERT ANGLE (DEG)	PIPE LENGTH (M)	SUPPORT REACTION (KN)	SEPARA -TION (M)	AXIAL TENSION (KN)	BENDING MOMENT (KN-M)	TENSILE STRAIN (PCT)	BENDING STRAIN (PCT)	TOTAL STRAIN (PCT)	PERCNT ALLOW (PCT)
105	SEABED	-466.82	-42.67	0.00	566.83	0.572	0.000	71.44	0.00	0.0000	0.0000	0.0000	0.00
106	SEABED	-472.87	-42.67	0.00	572.88	0.572	0.000	71.44	0.00	0.0000	0.0000	0.0000	0.00
107	SEABED	-478.92	-42.67	0.00	578.93	0.572	0.000	71.44	0.00	0.0000	0.0000	0.0000	0.00
108	SEABED	-484.97	-42.67	0.00	584.98	0.572	0.000	71.44	0.00	0.0000	0.0000	0.0000	0.00
109	SEABED	-491.02	-42.67	0.00	591.03	0.572	0.000	71.44	0.00	0.0000	0.0000	0.0000	0.00
110	SEABED	-497.07	-42.67	0.00	597.08	0.572	0.000	71.44	0.00	0.0000	0.0000	0.0000	0.00
111	SEABED	-503.12	-42.67	0.00	603.13	0.572	0.000	71.44	0.00	0.0000	0.0000	0.0000	0.00
112	SEABED	-509.17	-42.67	0.00	609.18	0.572	0.000	71.44	0.00	0.0000	0.0000	0.0000	0.00
113	SEABED	-515.22	-42.67	0.00	615.23	0.572	0.000	71.44	0.00	0.0000	0.0000	0.0000	0.00
114	SEABED	-521.27	-42.67	0.00	621.28	0.572	0.000	71.44	0.00	0.0000	0.0000	0.0000	0.00
115	SEABED	-527.32	-42.67	0.00	627.33	0.572	0.000	71.44	0.00	0.0000	0.0000	0.0000	0.00
116	SEABED	-533.37	-42.67	0.00	633.38	0.572	0.000	71.44	0.00	0.0000	0.0000	0.0000	0.00
117	SEABED	-539.42	-42.67	0.00	639.43	0.572	0.000	71.44	0.00	0.0000	0.0000	0.0000	0.00
118	SEABED	-545.47	-42.67	0.00	645.48	0.572	0.000	71.44	0.00	0.0000	0.0000	0.0000	0.00
119	SEABED	-551.52	-42.67	0.00	651.53	0.572	0.000	71.44	0.00	0.0000	0.0000	0.0000	0.00
120	SEABED	-557.57	-42.67	0.00	657.58	0.572	0.000	71.44	0.00	0.0000	0.0000	0.0000	0.00
121	SEABED	-563.62	-42.67	0.00	663.63	0.572	0.000	71.44	0.00	0.0000	0.0000	0.0000	0.00
122	SEABED	-569.67	-42.67	0.00	669.68	0.572	0.000	71.44	0.00	0.0000	0.0000	0.0000	0.00
123	SEABED	-575.72	-42.67	0.00	675.73	0.572	0.000	71.44	0.00	0.0000	0.0000	0.0000	0.00
124	SEABED	-581.77	-42.67	0.00	681.78	0.572	0.000	71.44	0.00	0.0000	0.0000	0.0000	0.00
125	SEABED	-587.82	-42.67	0.00	687.83	0.571	0.000	71.44	0.00	0.0000	0.0000	0.0000	0.00
126	SEABED	-593.87	-42.67	0.00	693.88	0.424	0.000	71.44	0.00	0.0000	0.0000	0.0000	0.00
127	SEABED	-596.97	-42.67	-0.02	696.98	0.239	0.000	71.44	0.00	0.0000	0.0000	0.0000	0.00
128	SEABED	-600.08	-42.67	-0.12	700.09	0.000	0.000	71.44	0.00	0.0000	0.0000	0.0000	0.00

S T A T I C P I P E C O O R D I N A T E S, F O R C E S A N D S T R A I N S

NODE NO.	PIPE SECTION	X COORD (M)	Y COORD (M)	VERT ANGLE (DEG)	PIPE LENGTH (M)	SUPPORT REACTION (KN)	SEPARA -TION (M)	AXIAL TENSION (KN)	BENDING MOMENT (KN-M)	TENSILE STRAIN (PCT)	BENDING STRAIN (PCT)	TOTAL STRAIN (PCT)	PERCNT ALLOW (PCT)
1	LAYBARGE	96.31	6.41	1.93	0.00	9.929	0.000	0.00	2.74	0.0000	0.0021	0.0021	0.00
3	LAYBARGE	84.28	6.05	1.58	12.04	24.167	0.000	-0.73	-19.23	0.0000	-0.0144	0.0144	0.00
5	LAYBARGE	73.45	5.73	1.90	22.87	24.325	0.000	-1.39	-29.31	-0.0001	-0.0219	0.0220	0.00
7	TENSIONR	60.10	5.24	2.31	36.23	32.100	0.000	82.62	-23.76	0.0038	-0.0178	0.0216	0.00
9	LAYBARGE	51.10	4.87	2.20	45.24	0.000	0.000	81.89	30.47	0.0038	0.0228	0.0266	0.00
10	LAYBARGE	46.45	4.70	1.92	49.89	10.404	0.000	81.57	12.31	0.0038	0.0092	0.0130	0.00
12	LAYBARGE	35.36	4.31	2.59	60.99	28.456	0.000	80.58	-78.83	0.0037	-0.0590	0.0627	0.00
14	LAYBARGE	25.34	3.64	5.32	71.03	44.066	0.000	78.93	-139.95	0.0037	-0.1047	0.1084	0.00
16	LAYBARGE	19.32	2.99	6.66	77.09	0.000	0.000	78.12	-33.36	0.0036	-0.0250	0.0286	0.00
17	LAYBARGE	8.88	1.76	6.74	87.60	30.448	0.000	75.66	-1.40	0.0035	-0.0010	0.0046	0.00
19	LAYBARGE	4.87	1.29	6.43	91.63	0.000	0.000	74.63	64.16	0.0035	0.0480	0.0515	0.00
20	LAYBARGE	3.05	1.09	6.07	93.47	0.000	0.473	74.15	87.96	0.0034	0.0658	0.0692	0.00
24	STINGER	-7.46	0.25	2.89	104.02	0.000	0.537	72.34	117.40	0.0034	0.0878	0.0912	0.00
26	STINGER	-16.58	-0.04	1.25	113.13	21.694	0.000	72.10	0.00	0.0034	0.0000	0.0034	0.00
29	STINGER	-26.47	-0.40	3.80	123.03	4.403	0.000	72.07	0.00	0.0000	0.0000	0.0000	0.00
31	STINGER	-37.35	-1.45	7.81	133.96	5.718	0.000	72.04	0.00	0.0000	0.0000	0.0000	0.00

33	STINGER	-40.33	-1.98	10.07	136.99	0.000	0.213	72.10	0.00	0.0000	0.0000	0.0000	0.00
35	SAGBEND	-46.59	-3.09	10.06	143.35	0.000	0.000	72.10	0.00	0.0000	0.0000	0.0000	0.00
36	SAGBEND	-52.55	-4.15	10.05	149.40	0.000	0.000	72.09	0.00	0.0000	0.0000	0.0000	0.00
37	SAGBEND	-58.50	-5.20	10.04	155.45	0.000	0.000	72.09	0.00	0.0000	0.0000	0.0000	0.00
38	SAGBEND	-64.46	-6.26	10.02	161.50	0.000	0.000	72.09	0.00	0.0000	0.0000	0.0000	0.00
39	SAGBEND	-70.42	-7.31	10.01	167.55	0.000	0.000	72.09	0.00	0.0000	0.0000	0.0000	0.00
40	SAGBEND	-76.38	-8.36	10.00	173.60	0.000	0.000	72.08	0.00	0.0000	0.0000	0.0000	0.00
41	SAGBEND	-82.34	-9.41	9.99	179.65	0.000	0.000	72.08	0.00	0.0000	0.0000	0.0000	0.00
42	SAGBEND	-88.29	-10.46	9.97	185.70	0.000	0.000	72.08	0.00	0.0000	0.0000	0.0000	0.00
43	SAGBEND	-94.25	-11.51	9.96	191.75	0.000	0.000	72.07	0.00	0.0000	0.0000	0.0000	0.00
44	SAGBEND	-100.21	-12.55	9.95	197.80	0.000	0.000	72.07	0.00	0.0000	0.0000	0.0000	0.00
45	SAGBEND	-106.17	-13.60	9.94	203.85	0.000	0.000	72.07	0.00	0.0000	0.0000	0.0000	0.00
46	SAGBEND	-112.13	-14.64	9.93	209.90	0.000	0.000	72.07	0.00	0.0000	0.0000	0.0000	0.00
47	SAGBEND	-118.09	-15.68	9.91	215.95	0.000	0.000	72.06	0.00	0.0000	0.0000	0.0000	0.00
48	SAGBEND	-124.05	-16.72	9.90	222.00	0.000	0.000	72.06	0.00	0.0000	0.0000	0.0000	0.00
49	SAGBEND	-130.01	-17.76	9.89	228.05	0.000	0.000	72.06	0.00	0.0000	0.0000	0.0000	0.00
50	SAGBEND	-135.97	-18.80	9.88	234.10	0.000	0.000	72.06	0.00	0.0000	0.0000	0.0000	0.00
51	SAGBEND	-141.93	-19.84	9.86	240.15	0.000	0.000	72.05	0.00	0.0000	0.0000	0.0000	0.00
52	SAGBEND	-147.89	-20.87	9.85	246.20	0.000	0.000	72.05	0.00	0.0000	0.0000	0.0000	0.00
53	SAGBEND	-153.85	-21.91	9.84	252.25	0.000	0.000	72.05	0.00	0.0000	0.0000	0.0000	0.00
54	SAGBEND	-159.81	-22.94	9.83	258.30	0.000	0.000	72.04	0.00	0.0000	0.0000	0.0000	0.00
55	SAGBEND	-165.77	-23.97	9.81	264.35	0.000	0.000	72.04	0.00	0.0000	0.0000	0.0000	0.00
56	SAGBEND	-171.74	-25.00	9.80	270.40	0.000	0.000	72.04	0.00	0.0000	0.0000	0.0000	0.00
57	SAGBEND	-177.70	-26.03	9.79	276.45	0.000	0.000	72.04	0.00	0.0000	0.0000	0.0000	0.00
58	SAGBEND	-183.66	-27.06	9.78	282.50	0.000	0.000	72.03	0.00	0.0000	0.0000	0.0000	0.00
59	SAGBEND	-189.62	-28.09	9.76	288.55	0.000	0.000	72.03	0.00	0.0000	0.0000	0.0000	0.00
60	SAGBEND	-195.58	-29.11	9.75	294.60	0.000	0.000	72.03	0.00	0.0000	0.0000	0.0000	0.00

S T A T I C P I P E C O O R D I N A T E S, F O R C E S A N D S T R A I N S

NODE NO.	PIPE SECTION	X COORD (M)	Y COORD (M)	VERT ANGLE (DEG)	PIPE LENGTH (M)	SUPPORT REACTION (KN)	SEPARA -TION (M)	AXIAL TENSION (KN)	BENDING MOMENT (KN-M)	TENSILE STRAIN (PCT)	BENDING STRAIN (PCT)	TOTAL STRAIN (PCT)	PERCNT ALLOW (PCT)
61	SAGBEND	-201.55	-30.14	9.74	300.65	0.000	0.000	72.03	0.00	0.0000	0.0000	0.0000	0.00
62	SAGBEND	-207.51	-31.16	9.73	306.70	0.000	0.000	72.02	0.00	0.0000	0.0000	0.0000	0.00
63	SAGBEND	-210.87	-31.74	9.72	310.11	0.000	0.000	72.02	0.00	0.0000	0.0000	0.0000	0.00
64	SAGBEND	-215.15	-32.46	9.40	314.46	0.000	0.000	71.95	0.00	0.0000	0.0000	0.0000	0.00
65	SAGBEND	-219.44	-33.16	9.07	318.80	0.000	0.000	71.89	0.00	0.0000	0.0000	0.0000	0.00
66	SAGBEND	-225.42	-34.09	8.62	324.85	0.000	0.000	71.80	0.00	0.0000	0.0000	0.0000	0.00
67	SAGBEND	-231.41	-34.97	8.17	330.90	0.000	0.000	71.72	0.00	0.0000	0.0000	0.0000	0.00
68	SAGBEND	-237.40	-35.81	7.72	336.95	0.000	0.000	71.64	0.00	0.0000	0.0000	0.0000	0.00
69	SAGBEND	-243.40	-36.59	7.27	343.00	0.000	0.000	71.56	0.00	0.0000	0.0000	0.0000	0.00
70	SAGBEND	-249.40	-37.34	6.81	349.05	0.000	0.000	71.49	0.00	0.0000	0.0000	0.0000	0.00
71	SAGBEND	-255.41	-38.03	6.36	355.10	0.000	0.000	71.43	0.00	0.0000	0.0000	0.0000	0.00
72	SAGBEND	-261.43	-38.68	5.90	361.15	0.000	0.000	71.37	0.00	0.0000	0.0000	0.0000	0.00
73	SAGBEND	-267.45	-39.27	5.44	367.20	0.000	0.000	71.31	0.00	0.0000	0.0000	0.0000	0.00
74	SAGBEND	-273.47	-39.82	4.98	373.25	0.000	0.000	71.26	0.00	0.0000	0.0000	0.0000	0.00
75	SAGBEND	-279.50	-40.32	4.53	379.30	0.000	0.000	71.21	0.00	0.0000	0.0000	0.0000	0.00
76	SAGBEND	-285.54	-40.78	4.07	385.35	0.000	0.000	71.17	0.00	0.0000	0.0000	0.0000	0.00
77	SAGBEND	-291.57	-41.18	3.61	391.40	0.000	0.000	71.13	0.00	0.0000	0.0000	0.0000	0.00
78	SAGBEND	-297.61	-41.54	3.15	397.45	0.000	0.000	71.09	0.00	0.0000	0.0000	0.0000	0.00
79	SAGBEND	-303.65	-41.85	2.69	403.50	0.000	0.000	71.07	0.00	0.0000	0.0000	0.0000	0.00
80	SAGBEND	-309.70	-42.11	2.22	409.55	0.000	0.000	71.04	0.00	0.0000	0.0000	0.0000	0.00
81	SAGBEND	-315.74	-42.32	1.76	415.60	0.000	0.000	71.02	0.00	0.0000	0.0000	0.0000	0.00
82	SAGBEND	-321.79	-42.48	1.30	421.65	0.000	0.000	71.01	0.00	0.0000	0.0000	0.0000	0.00
83	SAGBEND	-327.84	-42.59	0.84	427.70	0.000	0.000	71.00	0.00	0.0000	0.0000	0.0000	0.00
84	SAGBEND	-333.89	-42.66	0.39	433.75	0.012	0.000	70.99	-0.01	0.0000	0.0000	0.0000	0.00
85	SEABED	-339.94	-42.67	0.02	439.80	0.382	0.000	70.99	-0.01	0.0000	0.0000	0.0000	0.00
86	SEABED	-345.99	-42.67	0.00	445.85	0.566	0.000	70.99	0.00	0.0000	0.0000	0.0000	0.00
87	SEABED	-352.04	-42.67	0.00	451.90	0.572	0.000	70.99	0.00	0.0000	0.0000	0.0000	0.00
88	SEABED	-358.09	-42.67	0.00	457.95	0.572	0.000	70.99	0.00	0.0000	0.0000	0.0000	0.00
89	SEABED	-364.14	-42.67	0.00	464.00	0.572	0.000	70.99	0.00	0.0000	0.0000	0.0000	0.00
90	SEABED	-370.19	-42.67	0.00	470.05	0.572	0.000	70.99	0.00	0.0000	0.0000	0.0000	0.00
91	SEABED	-376.24	-42.67	0.00	476.10	0.572	0.000	70.99	0.00	0.0000	0.0000	0.0000	0.00
92	SEABED	-382.29	-42.67	0.00	482.15	0.572	0.000	70.99	0.00	0.0000	0.0000	0.0000	0.00
93	SEABED	-388.34	-42.67	0.00	488.20	0.572	0.000	70.99	0.00	0.0000	0.0000	0.0000	0.00
94	SEABED	-394.39	-42.67	0.00	494.25	0.572	0.000	70.99	0.00	0.0000	0.0000	0.0000	0.00
95	SEABED	-400.44	-42.67	0.00	500.30	0.572	0.000	70.99	0.00	0.0000	0.0000	0.0000	0.00
96	SEABED	-406.49	-42.67	0.00	506.35	0.572	0.000	70.99	0.00	0.0000	0.0000	0.0000	0.00
97	SEABED	-412.54	-42.67	0.00	512.40	0.572	0.000	70.99	0.00	0.0000	0.0000	0.0000	0.00
98	SEABED	-418.59	-42.67	0.00	518.45	0.572	0.000	70.99	0.00	0.0000	0.0000	0.0000	0.00
99	SEABED	-424.64	-42.67	0.00	524.50	0.572	0.000	70.99	0.00	0.0000	0.0000	0.0000	0.00
100	SEABED	-430.69	-42.67	0.00	530.55	0.572	0.000	70.99	0.00	0.0000	0.0000	0.0000	0.00
101	SEABED	-436.74	-42.67	0.00	536.60	0.572	0.000	70.99	0.00	0.0000	0.0000	0.0000	0.00
102	SEABED	-442.79	-42.67	0.00	542.65	0.572	0.000	70.99	0.00	0.0000	0.0000	0.0000	0.00
103	SEABED	-448.84	-42.67	0.00	548.70	0.572	0.000	70.99	0.00	0.0000	0.0000	0.0000	0.00
104	SEABED	-454.89	-42.67	0.00	554.75	0.572	0.000	70.99	0.00	0.0000	0.0000	0.0000	0.00

S T A T I C P I P E C O O R D I N A T E S, F O R C E S A N D S T R A I N S

NODE NO.	PIPE SECTION	X COORD (M)	Y COORD (M)	VERT ANGLE (DEG)	PIPE LENGTH (M)	SUPPORT REACTION (KN)	SEPARA -TION (M)	AXIAL TENSION (KN)	BENDING MOMENT (KN-M)	TENSILE STRAIN (PCT)	BENDING STRAIN (PCT)	TOTAL STRAIN (PCT)	PERCNT ALLOW (PCT)
105	SEABED	-460.94	-42.67	0.00	560.80	0.572	0.000	70.99	0.00	0.0000	0.0000	0.0000	0.00
106	SEABED	-466.99	-42.67	0.00	566.85	0.572	0.000	70.99	0.00	0.0000	0.0000	0.0000	0.00
107	SEABED	-473.04	-42.67	0.00	572.90	0.572	0.000	70.99	0.00	0.0000	0.0000	0.0000	0.00
108	SEABED	-479.09	-42.67	0.00	578.95	0.572	0.000	70.99	0.00	0.0000	0.0000	0.0000	0.00
109	SEABED	-485.14	-42.67	0.00	585.00	0.572	0.000	70.99	0.00	0.0000	0.0000	0.0000	0.00
110	SEABED	-491.19	-42.67	0.00	591.05	0.572	0.000	70.99	0.00	0.0000	0.0000	0.0000	0.00
111	SEABED	-497.24	-42.67	0.00	597.10	0.572	0.000	70.99	0.00	0.0000	0.0000	0.0000	0.00
112	SEABED	-503.29	-42.67	0.00	603.15	0.572	0.000	70.99	0.00	0.0000	0.0000	0.0000	0.00
113	SEABED	-509.34	-42.67	0.00	609.20	0.572	0.000	70.99	0.00	0.0000	0.0000	0.0000	0.00
114	SEABED	-515.39	-42.67	0.00	615.25	0.572	0.000	70.99	0.00	0.0000	0.0000	0.0000	0.00
115	SEABED	-521.44	-42.67	0.00	621.30	0.572	0.000	70.99	0.00	0.0000	0.0000	0.0000	0.00
116	SEABED	-527.49	-42.67	0.00	627.35	0.572	0.000	70.99	0.00	0.0000	0.0000	0.0000	0.00
117	SEABED	-533.54	-42.67	0.00	633.40	0.572	0.000	70.99	0.00	0.0000	0.0000	0.0000	0.00
118	SEABED	-539.59	-42.67	0.00	639.45	0.572	0.000	70.99	0.00	0.0000	0.0000	0.0000	0.00
119	SEABED	-545.64	-42.67	0.00	645.50	0.572	0.000	70.99	0.00	0.0000	0.0000	0.0000	0.00
120	SEABED	-551.69	-42.67	0.00	651.55	0.572	0.000	70.99	0.00	0.0000	0.0000	0.0000	0.00
121	SEABED	-557.74	-42.67	0.00	657.60	0.572	0.000	70.99	0.00	0.0000	0.0000	0.0000	0.00
122	SEABED	-563.79	-42.67	0.00	663.65	0.572	0.000	70.99	0.00	0.0000	0.0000	0.0000	0.00
123	SEABED	-569.84	-42.67	0.00	669.70	0.572	0.000	70.99	0.00	0.0000	0.0000	0.0000	0.00
124	SEABED	-575.89	-42.67	0.00	675.75	0.572	0.000	70.99	0.00	0.0000	0.0000	0.0000	0.00
125	SEABED	-581.94	-42.67	0.00	681.80	0.572	0.000	70.99	0.00	0.0000	0.0000	0.0000	0.00
126	SEABED	-587.99	-42.67	0.00	687.85	0.572	0.000	70.99	0.00	0.0000	0.0000	0.0000	0.00
127	SEABED	-594.04	-42.67	0.00	693.90	0.572	0.000	70.99	0.00	0.0000	0.0000	0.0000	0.00
128	SEABED	-600.09	-42.67	0.00	699.95	0.570	0.000	70.99	0.00	0.0000	0.0000	0.0000	0.00
129	SEABED	-606.14	-42.67	-0.01	706.00	0.433	0.000	70.99	0.00	0.0000	0.0000	0.0000	0.00
130	SEABED	-610.25	-42.67	-0.11	710.11	0.000	0.000	70.99	0.00	0.0000	0.0000	0.0000	0.00

S T A T I C P I P E C O O R D I N A T E S, F O R C E S A N D S T R A I N S

NODE NO.	PIPE SECTION	X COORD (M)	Y COORD (M)	VERT ANGLE (DEG)	PIPE LENGTH (M)	SUPPORT REACTION (KN)	SEPARA -TION (M)	AXIAL TENSION (KN)	BENDING MOMENT (KN-M)	TENSILE STRAIN (PCT)	BENDING STRAIN (PCT)	TOTAL STRAIN (PCT)	PERCNT ALLOW (PCT)
1	LAYBARGE	96.31	6.41	1.93	0.00	9.929	0.000	0.00	2.74	0.0000	0.0021	0.0021	0.00
3	LAYBARGE	84.28	6.05	1.58	12.04	24.163	0.000	-0.73	-19.23	0.0000	-0.0144	0.0144	0.00
5	LAYBARGE	73.45	5.73	1.90	22.87	24.336	0.000	-1.39	-29.33	-0.0001	-0.0219	0.0220	0.00
7	TENSIONR	60.10	5.24	2.31	36.23	32.087	0.000	98.21	-23.68	0.0046	-0.0177	0.0223	0.00
9	LAYBARGE	51.10	4.87	2.20	45.24	0.000	0.000	97.48	30.29	0.0045	0.0227	0.0272	0.00
10	LAYBARGE	46.45	4.70	1.92	49.89	10.279	0.000	97.17	12.40	0.0045	0.0093	0.0138	0.00
12	LAYBARGE	35.36	4.31	2.59	60.99	28.941	0.000	96.17	-78.85	0.0045	-0.0590	0.0634	0.00
14	LAYBARGE	25.34	3.64	5.33	71.03	44.986	0.000	94.52	-140.72	0.0044	-0.1053	0.1097	0.00
16	LAYBARGE	19.32	2.99	6.66	77.09	0.000	0.000	93.71	-33.03	0.0044	-0.0247	0.0291	0.00
17	LAYBARGE	8.88	1.76	6.73	87.60	29.555	0.000	91.26	-0.57	0.0042	-0.0004	0.0047	0.00
19	LAYBARGE	4.87	1.29	6.42	91.63	0.000	0.000	90.24	62.11	0.0042	0.0464	0.0506	0.00
20	LAYBARGE	3.05	1.09	6.08	93.46	0.000	0.474	89.76	84.60	0.0042	0.0633	0.0674	0.00
24	STINGER	-7.47	0.24	3.04	104.02	0.000	0.543	87.94	110.48	0.0041	0.0826	0.0867	0.00
26	STINGER	-16.58	-0.09	1.51	113.14	20.600	0.000	87.64	0.00	0.0041	0.0000	0.0041	0.00
29	STINGER	-26.47	-0.51	4.24	123.04	5.596	0.000	87.61	0.00	0.0000	0.0000	0.0000	0.00
31	STINGER	-37.34	-1.66	7.82	133.97	5.392	0.000	87.61	0.00	0.0000	0.0000	0.0000	0.00
33	STINGER	-40.33	-2.16	9.57	137.00	0.000	0.266	87.65	0.00	0.0000	0.0000	0.0000	0.00
35	SAGBEND	-46.59	-3.22	9.57	143.35	0.000	0.000	87.65	0.00	0.0000	0.0000	0.0000	0.00
36	SAGBEND	-52.55	-4.22	9.56	149.40	0.000	0.000	87.64	0.00	0.0000	0.0000	0.0000	0.00
37	SAGBEND	-58.52	-5.23	9.55	155.45	0.000	0.000	87.64	0.00	0.0000	0.0000	0.0000	0.00
38	SAGBEND	-64.49	-6.23	9.54	161.50	0.000	0.000	87.64	0.00	0.0000	0.0000	0.0000	0.00
39	SAGBEND	-70.45	-7.23	9.53	167.55	0.000	0.000	87.64	0.00	0.0000	0.0000	0.0000	0.00
40	SAGBEND	-76.42	-8.23	9.52	173.60	0.000	0.000	87.63	0.00	0.0000	0.0000	0.0000	0.00
41	SAGBEND	-82.39	-9.23	9.51	179.65	0.000	0.000	87.63	0.00	0.0000	0.0000	0.0000	0.00
42	SAGBEND	-88.35	-10.23	9.50	185.70	0.000	0.000	87.63	0.00	0.0000	0.0000	0.0000	0.00
43	SAGBEND	-94.32	-11.23	9.49	191.75	0.000	0.000	87.63	0.00	0.0000	0.0000	0.0000	0.00
44	SAGBEND	-100.29	-12.23	9.48	197.80	0.000	0.000	87.62	0.00	0.0000	0.0000	0.0000	0.00
45	SAGBEND	-106.26	-13.22	9.46	203.85	0.000	0.000	87.62	0.00	0.0000	0.0000	0.0000	0.00
46	SAGBEND	-112.22	-14.22	9.45	209.90	0.000	0.000	87.62	0.00	0.0000	0.0000	0.0000	0.00

47	SAGBEND	-118.19	-15.21	9.44	215.95	0.000	0.000	87.62	0.00	0.0000	0.0000	0.0000	0.00
48	SAGBEND	-124.16	-16.20	9.43	222.00	0.000	0.000	87.61	0.00	0.0000	0.0000	0.0000	0.00
49	SAGBEND	-130.13	-17.19	9.42	228.05	0.000	0.000	87.61	0.00	0.0000	0.0000	0.0000	0.00
50	SAGBEND	-136.10	-18.18	9.41	234.10	0.000	0.000	87.61	0.00	0.0000	0.0000	0.0000	0.00
51	SAGBEND	-142.07	-19.17	9.40	240.15	0.000	0.000	87.61	0.00	0.0000	0.0000	0.0000	0.00
52	SAGBEND	-148.03	-20.16	9.39	246.20	0.000	0.000	87.60	0.00	0.0000	0.0000	0.0000	0.00
53	SAGBEND	-154.00	-21.15	9.38	252.25	0.000	0.000	87.60	0.00	0.0000	0.0000	0.0000	0.00
54	SAGBEND	-159.97	-22.13	9.37	258.30	0.000	0.000	87.60	0.00	0.0000	0.0000	0.0000	0.00
55	SAGBEND	-165.94	-23.12	9.36	264.35	0.000	0.000	87.60	0.00	0.0000	0.0000	0.0000	0.00
56	SAGBEND	-171.91	-24.10	9.35	270.40	0.000	0.000	87.59	0.00	0.0000	0.0000	0.0000	0.00
57	SAGBEND	-177.88	-25.08	9.34	276.45	0.000	0.000	87.59	0.00	0.0000	0.0000	0.0000	0.00
58	SAGBEND	-183.85	-26.07	9.33	282.50	0.000	0.000	87.59	0.00	0.0000	0.0000	0.0000	0.00
59	SAGBEND	-189.82	-27.05	9.32	288.55	0.000	0.000	87.59	0.00	0.0000	0.0000	0.0000	0.00
60	SAGBEND	-195.79	-28.03	9.31	294.60	0.000	0.000	87.58	0.00	0.0000	0.0000	0.0000	0.00

S T A T I C P I P E C O O R D I N A T E S, F O R C E S A N D S T R A I N S

NODE NO.	PIPE SECTION	X COORD (M)	Y COORD (M)	VERT ANGLE (DEG)	PIPE LENGTH (M)	SUPPORT REACTION (KN)	SEPARA -TION (M)	AXIAL TENSION (KN)	BENDING MOMENT (KN-M)	TENSILE STRAIN (PCT)	BENDING STRAIN (PCT)	TOTAL STRAIN (PCT)	PERCNT ALLOW (PCT)
61	SAGBEND	-201.76	-29.00	9.30	300.65	0.000	0.000	87.58	0.00	0.0000	0.0000	0.0000	0.00
62	SAGBEND	-207.73	-29.98	9.29	306.70	0.000	0.000	87.58	0.00	0.0000	0.0000	0.0000	0.00
63	SAGBEND	-211.10	-30.53	9.29	310.11	0.000	0.000	87.58	0.00	0.0000	0.0000	0.0000	0.00
64	SAGBEND	-215.39	-31.22	9.02	314.45	0.000	0.000	87.51	0.00	0.0000	0.0000	0.0000	0.00
65	SAGBEND	-219.68	-31.89	8.75	318.80	0.000	0.000	87.45	0.00	0.0000	0.0000	0.0000	0.00
66	SAGBEND	-225.66	-32.80	8.38	324.85	0.000	0.000	87.36	0.00	0.0000	0.0000	0.0000	0.00
67	SAGBEND	-231.65	-33.66	8.01	330.90	0.000	0.000	87.28	0.00	0.0000	0.0000	0.0000	0.00
68	SAGBEND	-237.64	-34.48	7.64	336.95	0.000	0.000	87.20	0.00	0.0000	0.0000	0.0000	0.00
69	SAGBEND	-243.64	-35.27	7.27	343.00	0.000	0.000	87.13	0.00	0.0000	0.0000	0.0000	0.00
70	SAGBEND	-249.65	-36.01	6.89	349.05	0.000	0.000	87.06	0.00	0.0000	0.0000	0.0000	0.00
71	SAGBEND	-255.66	-36.72	6.52	355.10	0.000	0.000	86.99	0.00	0.0000	0.0000	0.0000	0.00
72	SAGBEND	-261.67	-37.39	6.15	361.15	0.000	0.000	86.93	0.00	0.0000	0.0000	0.0000	0.00
73	SAGBEND	-267.69	-38.01	5.77	367.20	0.000	0.000	86.87	0.00	0.0000	0.0000	0.0000	0.00
74	SAGBEND	-273.71	-38.60	5.40	373.25	0.000	0.000	86.81	0.00	0.0000	0.0000	0.0000	0.00
75	SAGBEND	-279.73	-39.15	5.02	379.30	0.000	0.000	86.76	0.00	0.0000	0.0000	0.0000	0.00
76	SAGBEND	-285.76	-39.66	4.64	385.35	0.000	0.000	86.71	0.00	0.0000	0.0000	0.0000	0.00
77	SAGBEND	-291.79	-40.13	4.27	391.40	0.000	0.000	86.67	0.00	0.0000	0.0000	0.0000	0.00
78	SAGBEND	-297.83	-40.56	3.89	397.45	0.000	0.000	86.63	0.00	0.0000	0.0000	0.0000	0.00
79	SAGBEND	-303.86	-40.95	3.51	403.50	0.000	0.000	86.59	0.00	0.0000	0.0000	0.0000	0.00
80	SAGBEND	-309.90	-41.30	3.13	409.55	0.000	0.000	86.56	0.00	0.0000	0.0000	0.0000	0.00
81	SAGBEND	-315.95	-41.61	2.76	415.60	0.000	0.000	86.53	0.00	0.0000	0.0000	0.0000	0.00
82	SAGBEND	-321.99	-41.88	2.38	421.65	0.000	0.000	86.50	0.00	0.0000	0.0000	0.0000	0.00
83	SAGBEND	-328.04	-42.12	2.00	427.70	0.000	0.000	86.48	0.00	0.0000	0.0000	0.0000	0.00
84	SAGBEND	-334.08	-42.31	1.62	433.75	0.000	0.000	86.46	0.00	0.0000	0.0000	0.0000	0.00
85	SAGBEND	-340.13	-42.46	1.24	439.80	0.000	0.000	86.45	0.00	0.0000	0.0000	0.0000	0.00
86	SAGBEND	-346.18	-42.57	0.86	445.85	0.000	0.000	86.44	0.00	0.0000	0.0000	0.0000	0.00
87	SAGBEND	-352.23	-42.64	0.48	451.90	0.000	0.000	86.43	0.00	0.0000	0.0000	0.0000	0.00
88	SEABED	-358.28	-42.67	0.10	457.95	0.168	0.000	86.43	0.01	0.0000	0.0000	0.0000	0.00
89	SEABED	-364.33	-42.67	0.01	464.00	0.536	0.000	86.43	0.01	0.0000	0.0000	0.0000	0.00
90	SEABED	-370.38	-42.67	0.00	470.05	0.571	0.000	86.43	0.00	0.0000	0.0000	0.0000	0.00
91	SEABED	-376.43	-42.67	0.00	476.10	0.572	0.000	86.43	0.00	0.0000	0.0000	0.0000	0.00
92	SEABED	-382.48	-42.67	0.00	482.15	0.572	0.000	86.43	0.00	0.0000	0.0000	0.0000	0.00
93	SEABED	-388.53	-42.67	0.00	488.20	0.572	0.000	86.43	0.00	0.0000	0.0000	0.0000	0.00
94	SEABED	-394.58	-42.67	0.00	494.25	0.572	0.000	86.43	0.00	0.0000	0.0000	0.0000	0.00
95	SEABED	-400.63	-42.67	0.00	500.30	0.572	0.000	86.43	0.00	0.0000	0.0000	0.0000	0.00
96	SEABED	-406.68	-42.67	0.00	506.35	0.572	0.000	86.43	0.00	0.0000	0.0000	0.0000	0.00
97	SEABED	-412.73	-42.67	0.00	512.40	0.572	0.000	86.43	0.00	0.0000	0.0000	0.0000	0.00
98	SEABED	-418.78	-42.67	0.00	518.45	0.572	0.000	86.43	0.00	0.0000	0.0000	0.0000	0.00
99	SEABED	-424.83	-42.67	0.00	524.50	0.572	0.000	86.43	0.00	0.0000	0.0000	0.0000	0.00
100	SEABED	-430.88	-42.67	0.00	530.55	0.572	0.000	86.43	0.00	0.0000	0.0000	0.0000	0.00
101	SEABED	-436.93	-42.67	0.00	536.60	0.572	0.000	86.43	0.00	0.0000	0.0000	0.0000	0.00
102	SEABED	-442.98	-42.67	0.00	542.65	0.572	0.000	86.43	0.00	0.0000	0.0000	0.0000	0.00
103	SEABED	-449.03	-42.67	0.00	548.70	0.572	0.000	86.43	0.00	0.0000	0.0000	0.0000	0.00
104	SEABED	-455.08	-42.67	0.00	554.75	0.572	0.000	86.43	0.00	0.0000	0.0000	0.0000	0.00

S T A T I C P I P E C O O R D I N A T E S, F O R C E S A N D S T R A I N S

NODE NO.	PIPE SECTION	X COORD (M)	Y COORD (M)	VERT ANGLE (DEG)	PIPE LENGTH (M)	SUPPORT REACTION (KN)	SEPARA -TION (M)	AXIAL TENSION (KN)	BENDING MOMENT (KN-M)	TENSILE STRAIN (PCT)	BENDING STRAIN (PCT)	TOTAL STRAIN (PCT)	PERCNT ALLOW (PCT)
105	SEABED	-461.13	-42.67	0.00	560.80	0.572	0.000	86.43	0.00	0.0000	0.0000	0.0000	0.00
106	SEABED	-467.18	-42.67	0.00	566.85	0.572	0.000	86.43	0.00	0.0000	0.0000	0.0000	0.00
107	SEABED	-473.23	-42.67	0.00	572.90	0.572	0.000	86.43	0.00	0.0000	0.0000	0.0000	0.00
108	SEABED	-479.28	-42.67	0.00	578.95	0.572	0.000	86.43	0.00	0.0000	0.0000	0.0000	0.00
109	SEABED	-485.33	-42.67	0.00	585.00	0.572	0.000	86.43	0.00	0.0000	0.0000	0.0000	0.00
110	SEABED	-491.38	-42.67	0.00	591.05	0.572	0.000	86.43	0.00	0.0000	0.0000	0.0000	0.00
111	SEABED	-497.43	-42.67	0.00	597.10	0.572	0.000	86.43	0.00	0.0000	0.0000	0.0000	0.00
112	SEABED	-503.48	-42.67	0.00	603.15	0.572	0.000	86.43	0.00	0.0000	0.0000	0.0000	0.00
113	SEABED	-509.53	-42.67	0.00	609.20	0.572	0.000	86.43	0.00	0.0000	0.0000	0.0000	0.00
114	SEABED	-515.58	-42.67	0.00	615.25	0.572	0.000	86.43	0.00	0.0000	0.0000	0.0000	0.00
115	SEABED	-521.63	-42.67	0.00	621.30	0.572	0.000	86.43	0.00	0.0000	0.0000	0.0000	0.00
116	SEABED	-527.68	-42.67	0.00	627.35	0.572	0.000	86.43	0.00	0.0000	0.0000	0.0000	0.00
117	SEABED	-533.73	-42.67	0.00	633.40	0.572	0.000	86.43	0.00	0.0000	0.0000	0.0000	0.00
118	SEABED	-539.78	-42.67	0.00	639.45	0.572	0.000	86.43	0.00	0.0000	0.0000	0.0000	0.00
119	SEABED	-545.83	-42.67	0.00	645.50	0.572	0.000	86.43	0.00	0.0000	0.0000	0.0000	0.00
120	SEABED	-551.88	-42.67	0.00	651.55	0.572	0.000	86.43	0.00	0.0000	0.0000	0.0000	0.00
121	SEABED	-557.93	-42.67	0.00	657.60	0.572	0.000	86.43	0.00	0.0000	0.0000	0.0000	0.00
122	SEABED	-563.98	-42.67	0.00	663.65	0.572	0.000	86.43	0.00	0.0000	0.0000	0.0000	0.00
123	SEABED	-570.03	-42.67	0.00	669.70	0.572	0.000	86.43	0.00	0.0000	0.0000	0.0000	0.00
124	SEABED	-576.08	-42.67	0.00	675.75	0.572	0.000	86.43	0.00	0.0000	0.0000	0.0000	0.00
125	SEABED	-582.13	-42.67	0.00	681.80	0.572	0.000	86.43	0.00	0.0000	0.0000	0.0000	0.00
126	SEABED	-588.18	-42.67	0.00	687.85	0.572	0.000	86.43	0.00	0.0000	0.0000	0.0000	0.00
127	SEABED	-594.23	-42.67	0.00	693.90	0.572	0.000	86.43	0.00	0.0000	0.0000	0.0000	0.00
128	SEABED	-600.28	-42.67	0.00	699.95	0.568	0.000	86.43	0.00	0.0000	0.0000	0.0000	0.00
129	SEABED	-606.33	-42.67	-0.01	706.00	0.424	0.000	86.43	0.00	0.0000	0.0000	0.0000	0.00
130	SEABED	-610.44	-42.67	-0.11	710.11	0.000	0.000	86.43	0.00	0.0000	0.0000	0.0000	0.00

S T A T I C P I P E C O O R D I N A T E S, F O R C E S A N D S T R A I N S

NODE NO.	PIPE SECTION	X COORD (M)	Y COORD (M)	VERT ANGLE (DEG)	PIPE LENGTH (M)	SUPPORT REACTION (KN)	SEPARA -TION (M)	AXIAL TENSION (KN)	BENDING MOMENT (KN-M)	TENSILE STRAIN (PCT)	BENDING STRAIN (PCT)	TOTAL STRAIN (PCT)	PERCNT ALLOW (PCT)
1	LAYBARGE	96.31	6.41	1.93	0.00	9.928	0.000	0.00	2.74	0.0000	0.0021	0.0021	0.00
3	LAYBARGE	84.28	6.05	1.58	12.04	24.170	0.000	-0.73	-19.24	0.0000	-0.0144	0.0144	0.00
5	LAYBARGE	73.45	5.73	1.90	22.87	24.313	0.000	-1.39	-29.28	-0.0001	-0.0219	0.0220	0.00
7	TENSIONR	60.10	5.24	2.31	36.23	32.167	0.000	98.22	-23.80	0.0046	-0.0178	0.0224	0.00
9	LAYBARGE	51.10	4.87	2.20	45.24	0.000	0.000	97.49	30.67	0.0045	0.0229	0.0275	0.00
10	LAYBARGE	46.45	4.70	1.91	49.89	9.875	0.000	97.17	13.00	0.0045	0.0097	0.0142	0.00
12	LAYBARGE	35.36	4.31	2.62	60.99	30.805	0.000	96.16	-80.50	0.0045	-0.0602	0.0647	0.00
14	LAYBARGE	25.34	3.64	5.24	71.03	40.279	0.000	94.61	-129.75	0.0044	-0.0970	0.1014	0.00
16	LAYBARGE	19.31	3.01	6.52	77.09	0.000	0.000	93.74	-38.68	0.0044	-0.0289	0.0333	0.00
17	LAYBARGE	8.88	1.76	7.18	87.60	34.917	0.000	91.21	-39.54	0.0042	-0.0296	0.0338	0.00
19	LAYBARGE	4.88	1.24	7.27	91.63	0.000	0.000	90.22	26.24	0.0042	0.0196	0.0238	0.00
20	LAYBARGE	3.05	1.01	7.09	93.48	0.000	0.398	89.72	50.19	0.0042	0.0375	0.0417	0.00
24	STINGER	-7.56	-0.11	4.90	104.15	0.000	0.456	87.48	79.95	0.0041	0.0598	0.0639	0.00
26	STINGER	-16.67	-0.78	3.86	113.28	18.132	0.000	86.95	-2.50	0.0040	-0.0019	0.0059	0.00
29	STINGER	-26.50	-1.44	3.70	123.13	8.244	0.000	86.30	0.00	0.0040	0.0000	0.0040	0.00
31	STINGER	-37.37	-2.61	7.67	134.07	4.542	0.000	86.35	0.00	0.0000	0.0000	0.0000	0.00
33	STINGER	-40.34	-3.09	9.17	137.08	0.000	0.294	86.38	0.00	0.0000	0.0000	0.0000	0.00
35	SAGBEND	-46.53	-4.09	9.16	143.35	0.000	0.000	86.38	0.00	0.0000	0.0000	0.0000	0.00
36	SAGBEND	-52.51	-5.05	9.15	149.40	0.000	0.000	86.38	0.00	0.0000	0.0000	0.0000	0.00
37	SAGBEND	-58.48	-6.02	9.14	155.45	0.000	0.000	86.37	0.00	0.0000	0.0000	0.0000	0.00
38	SAGBEND	-64.45	-6.98	9.13	161.50	0.000	0.000	86.37	0.00	0.0000	0.0000	0.0000	0.00
39	SAGBEND	-70.43	-7.94	9.12	167.55	0.000	0.000	86.37	0.00	0.0000	0.0000	0.0000	0.00
40	SAGBEND	-76.40	-8.89	9.11	173.60	0.000	0.000	86.37	0.00	0.0000	0.0000	0.0000	0.00
41	SAGBEND	-82.37	-9.85	9.10	179.65	0.000	0.000	86.36	0.00	0.0000	0.0000	0.0000	0.00
42	SAGBEND	-88.35	-10.81	9.09	185.70	0.000	0.000	86.36	0.00	0.0000	0.0000	0.0000	0.00
43	SAGBEND	-94.32	-11.76	9.08	191.75	0.000	0.000	86.36	0.00	0.0000	0.0000	0.0000	0.00
44	SAGBEND	-100.30	-12.72	9.07	197.80	0.000	0.000	86.36	0.00	0.0000	0.0000	0.0000	0.00
45	SAGBEND	-106.27	-13.67	9.06	203.85	0.000	0.000	86.35	0.00	0.0000	0.0000	0.0000	0.00
46	SAGBEND	-112.25	-14.62	9.05	209.90	0.000	0.000	86.35	0.00	0.0000	0.0000	0.0000	0.00
47	SAGBEND	-118.22	-15.57	9.04	215.95	0.000	0.000	86.35	0.00	0.0000	0.0000	0.0000	0.00
48	SAGBEND	-124.20	-16.52	9.03	222.00	0.000	0.000	86.35	0.00	0.0000	0.0000	0.0000	0.00
49	SAGBEND	-130.17	-17.47	9.02	228.05	0.000	0.000	86.34	0.00	0.0000	0.0000	0.0000	0.00
50	SAGBEND	-136.15	-18.42	9.01	234.10	0.000	0.000	86.34	0.00	0.0000	0.0000	0.0000	0.00
51	SAGBEND	-142.12	-19.37	9.00	240.15	0.000	0.000	86.34	0.00	0.0000	0.0000	0.0000	0.00
52	SAGBEND	-148.10	-20.31	8.99	246.20	0.000	0.000	86.34	0.00	0.0000	0.0000	0.0000	0.00
53	SAGBEND	-154.07	-21.26	8.98	252.25	0.000	0.000	86.33	0.00	0.0000	0.0000	0.0000	0.00
54	SAGBEND	-160.05	-22.20	8.97	258.30	0.000	0.000	86.33	0.00	0.0000	0.0000	0.0000	0.00
55	SAGBEND	-166.02	-23.14	8.96	264.35	0.000	0.000	86.33	0.00	0.0000	0.0000	0.0000	0.00
56	SAGBEND	-172.00	-24.08	8.95	270.40	0.000	0.000	86.33	0.00	0.0000	0.0000	0.0000	0.00
57	SAGBEND	-177.98	-25.02	8.94	276.45	0.000	0.000	86.32	0.00	0.0000	0.0000	0.0000	0.00
58	SAGBEND	-183.95	-25.96	8.92	282.50	0.000	0.000	86.32	0.00	0.0000	0.0000	0.0000	0.00
59	SAGBEND	-189.93	-26.90	8.91	288.55	0.000	0.000	86.32	0.00	0.0000	0.0000	0.0000	0.00
60	SAGBEND	-195.91	-27.84	8.90	294.60	0.000	0.000	86.32	0.00	0.0000	0.0000	0.0000	0.00

S T A T I C P I P E C O O R D I N A T E S, F O R C E S A N D S T R A I N S

NODE NO.	PIPE SECTION	X COORD (M)	Y COORD (M)	VERT ANGLE (DEG)	PIPE LENGTH (M)	SUPPORT REACTION (KN)	SEPARA -TION (M)	AXIAL TENSION (KN)	BENDING MOMENT (KN-M)	TENSILE STRAIN (PCT)	BENDING STRAIN (PCT)	TOTAL STRAIN (PCT)	PERCNT ALLOW (PCT)
61	SAGBEND	-201.89	-28.77	8.89	300.65	0.000	0.000	86.31	0.00	0.0000	0.0000	0.0000	0.00
62	SAGBEND	-207.86	-29.71	8.88	306.70	0.000	0.000	86.31	0.00	0.0000	0.0000	0.0000	0.00
63	SAGBEND	-213.84	-30.64	8.87	312.75	0.000	0.000	86.31	0.00	0.0000	0.0000	0.0000	0.00
64	SAGBEND	-217.48	-31.21	8.87	316.43	0.000	0.000	86.31	0.00	0.0000	0.0000	0.0000	0.00
65	SAGBEND	-221.11	-31.78	8.86	320.11	0.000	0.000	86.31	0.00	0.0000	0.0000	0.0000	0.00
66	SAGBEND	-225.80	-32.50	8.57	324.85	0.000	0.000	86.24	0.00	0.0000	0.0000	0.0000	0.00
67	SAGBEND	-231.78	-33.38	8.19	330.90	0.000	0.000	86.15	0.00	0.0000	0.0000	0.0000	0.00
68	SAGBEND	-237.77	-34.22	7.81	336.95	0.000	0.000	86.07	0.00	0.0000	0.0000	0.0000	0.00
69	SAGBEND	-243.77	-35.02	7.44	343.00	0.000	0.000	86.00	0.00	0.0000	0.0000	0.0000	0.00
70	SAGBEND	-249.77	-35.78	7.06	349.05	0.000	0.000	85.93	0.00	0.0000	0.0000	0.0000	0.00
71	SAGBEND	-255.78	-36.51	6.68	355.10	0.000	0.000	85.86	0.00	0.0000	0.0000	0.0000	0.00
72	SAGBEND	-261.79	-37.19	6.30	361.15	0.000	0.000	85.79	0.00	0.0000	0.0000	0.0000	0.00
73	SAGBEND	-267.81	-37.84	5.92	367.20	0.000	0.000	85.73	0.00	0.0000	0.0000	0.0000	0.00
74	SAGBEND	-273.83	-38.44	5.54	373.25	0.000	0.000	85.68	0.00	0.0000	0.0000	0.0000	0.00
75	SAGBEND	-279.85	-39.00	5.16	379.30	0.000	0.000	85.62	0.00	0.0000	0.0000	0.0000	0.00
76	SAGBEND	-285.88	-39.53	4.78	385.35	0.000	0.000	85.57	0.00	0.0000	0.0000	0.0000	0.00
77	SAGBEND	-291.91	-40.01	4.39	391.40	0.000	0.000	85.53	0.00	0.0000	0.0000	0.0000	0.00
78	SAGBEND	-297.94	-40.45	4.01	397.45	0.000	0.000	85.49	0.00	0.0000	0.0000	0.0000	0.00
79	SAGBEND	-303.98	-40.86	3.63	403.50	0.000	0.000	85.45	0.00	0.0000	0.0000	0.0000	0.00
80	SAGBEND	-310.02	-41.22	3.25	409.55	0.000	0.000	85.41	0.00	0.0000	0.0000	0.0000	0.00
81	SAGBEND	-316.06	-41.54	2.86	415.60	0.000	0.000	85.38	0.00	0.0000	0.0000	0.0000	0.00
82	SAGBEND	-322.10	-41.83	2.48	421.65	0.000	0.000	85.36	0.00	0.0000	0.0000	0.0000	0.00
83	SAGBEND	-328.15	-42.07	2.10	427.70	0.000	0.000	85.33	0.00	0.0000	0.0000	0.0000	0.00
84	SAGBEND	-334.19	-42.27	1.71	433.75	0.000	0.000	85.31	0.00	0.0000	0.0000	0.0000	0.00
85	SAGBEND	-340.24	-42.43	1.33	439.80	0.000	0.000	85.30	0.00	0.0000	0.0000	0.0000	0.00
86	SAGBEND	-346.29	-42.55	0.94	445.85	0.000	0.000	85.29	0.00	0.0000	0.0000	0.0000	0.00
87	SAGBEND	-352.34	-42.63	0.56	451.90	0.000	0.000	85.28	0.00	0.0000	0.0000	0.0000	0.00
88	SAGBEND	-358.39	-42.67	0.17	457.95	0.094	0.000	85.28	0.00	0.0000	0.0000	0.0000	0.00
89	SEABED	-364.44	-42.67	0.01	464.00	0.503	0.000	85.28	0.01	0.0000	0.0000	0.0000	0.00
90	SEABED	-370.49	-42.67	0.00	470.05	0.570	0.000	85.28	0.00	0.0000	0.0000	0.0000	0.00
91	SEABED	-376.54	-42.67	0.00	476.10	0.572	0.000	85.28	0.00	0.0000	0.0000	0.0000	0.00
92	SEABED	-382.59	-42.67	0.00	482.15	0.572	0.000	85.28	0.00	0.0000	0.0000	0.0000	0.00
93	SEABED	-388.64	-42.67	0.00	488.20	0.572	0.000	85.28	0.00	0.0000	0.0000	0.0000	0.00
94	SEABED	-394.69	-42.67	0.00	494.25	0.572	0.000	85.28	0.00	0.0000	0.0000	0.0000	0.00
95	SEABED	-400.74	-42.67	0.00	500.30	0.572	0.000	85.28	0.00	0.0000	0.0000	0.0000	0.00
96	SEABED	-406.79	-42.67	0.00	506.35	0.572	0.000	85.28	0.00	0.0000	0.0000	0.0000	0.00
97	SEABED	-412.84	-42.67	0.00	512.40	0.572	0.000	85.28	0.00	0.0000	0.0000	0.0000	0.00
98	SEABED	-418.89	-42.67	0.00	518.45	0.572	0.000	85.28	0.00	0.0000	0.0000	0.0000	0.00
99	SEABED	-424.94	-42.67	0.00	524.50	0.572	0.000	85.28	0.00	0.0000	0.0000	0.0000	0.00
100	SEABED	-430.99	-42.67	0.00	530.55	0.572	0.000	85.28	0.00	0.0000	0.0000	0.0000	0.00
101	SEABED	-437.04	-42.67	0.00	536.60	0.572	0.000	85.28	0.00	0.0000	0.0000	0.0000	0.00
102	SEABED	-443.09	-42.67	0.00	542.65	0.572	0.000	85.28	0.00	0.0000	0.0000	0.0000	0.00
103	SEABED	-449.14	-42.67	0.00	548.70	0.572	0.000	85.28	0.00	0.0000	0.0000	0.0000	0.00
104	SEABED	-455.19	-42.67	0.00	554.75	0.572	0.000	85.28	0.00	0.0000	0.0000	0.0000	0.00

S T A T I C P I P E C O O R D I N A T E S, F O R C E S A N D S T R A I N S

NODE NO.	PIPE SECTION	X COORD (M)	Y COORD (M)	VERT ANGLE (DEG)	PIPE LENGTH (M)	SUPPORT REACTION (KN)	SEPARA -TION (M)	AXIAL TENSION (KN)	BENDING MOMENT (KN-M)	TENSILE STRAIN (PCT)	BENDING STRAIN (PCT)	TOTAL STRAIN (PCT)	PERCNT ALLOW (PCT)
105	SEABED	-461.24	-42.67	0.00	560.80	0.572	0.000	85.28	0.00	0.0000	0.0000	0.0000	0.00
106	SEABED	-467.29	-42.67	0.00	566.85	0.572	0.000	85.28	0.00	0.0000	0.0000	0.0000	0.00
107	SEABED	-473.34	-42.67	0.00	572.90	0.572	0.000	85.28	0.00	0.0000	0.0000	0.0000	0.00
108	SEABED	-479.39	-42.67	0.00	578.95	0.572	0.000	85.28	0.00	0.0000	0.0000	0.0000	0.00
109	SEABED	-485.44	-42.67	0.00	585.00	0.572	0.000	85.28	0.00	0.0000	0.0000	0.0000	0.00
110	SEABED	-491.49	-42.67	0.00	591.05	0.572	0.000	85.28	0.00	0.0000	0.0000	0.0000	0.00
111	SEABED	-497.54	-42.67	0.00	597.10	0.572	0.000	85.28	0.00	0.0000	0.0000	0.0000	0.00
112	SEABED	-503.59	-42.67	0.00	603.15	0.572	0.000	85.28	0.00	0.0000	0.0000	0.0000	0.00
113	SEABED	-509.64	-42.67	0.00	609.20	0.572	0.000	85.28	0.00	0.0000	0.0000	0.0000	0.00
114	SEABED	-515.69	-42.67	0.00	615.25	0.572	0.000	85.28	0.00	0.0000	0.0000	0.0000	0.00
115	SEABED	-521.74	-42.67	0.00	621.30	0.572	0.000	85.28	0.00	0.0000	0.0000	0.0000	0.00
116	SEABED	-527.79	-42.67	0.00	627.35	0.572	0.000	85.28	0.00	0.0000	0.0000	0.0000	0.00
117	SEABED	-533.84	-42.67	0.00	633.40	0.572	0.000	85.28	0.00	0.0000	0.0000	0.0000	0.00
118	SEABED	-539.89	-42.67	0.00	639.45	0.572	0.000	85.28	0.00	0.0000	0.0000	0.0000	0.00
119	SEABED	-545.94	-42.67	0.00	645.50	0.572	0.000	85.28	0.00	0.0000	0.0000	0.0000	0.00
120	SEABED	-551.99	-42.67	0.00	651.55	0.572	0.000	85.28	0.00	0.0000	0.0000	0.0000	0.00
121	SEABED	-558.04	-42.67	0.00	657.60	0.572	0.000	85.28	0.00	0.0000	0.0000	0.0000	0.00
122	SEABED	-564.09	-42.67	0.00	663.65	0.572	0.000	85.28	0.00	0.0000	0.0000	0.0000	0.00
123	SEABED	-570.14	-42.67	0.00	669.70	0.572	0.000	85.28	0.00	0.0000	0.0000	0.0000	0.00
124	SEABED	-576.19	-42.67	0.00	675.75	0.572	0.000	85.28	0.00	0.0000	0.0000	0.0000	0.00
125	SEABED	-582.24	-42.67	0.00	681.80	0.572	0.000	85.28	0.00	0.0000	0.0000	0.0000	0.00
126	SEABED	-588.29	-42.67	0.00	687.85	0.572	0.000	85.28	0.00	0.0000	0.0000	0.0000	0.00
127	SEABED	-594.34	-42.67	0.00	693.90	0.572	0.000	85.28	0.00	0.0000	0.0000	0.0000	0.00
128	SEABED	-600.39	-42.67	0.00	699.95	0.572	0.000	85.28	0.00	0.0000	0.0000	0.0000	0.00
129	SEABED	-606.44	-42.67	0.00	706.00	0.572	0.000	85.28	0.00	0.0000	0.0000	0.0000	0.00
130	SEABED	-612.49	-42.67	0.00	712.05	0.471	0.000	85.28	0.00	0.0000	0.0000	0.0000	0.00
131	SEABED	-616.52	-42.67	-0.01	716.08	0.327	0.000	85.28	0.00	0.0000	0.0000	0.0000	0.00
132	SEABED	-620.55	-42.67	-0.11	720.11	0.000	0.000	85.28	0.00	0.0000	0.0000	0.0000	0.00

S T A T I C P I P E C O O R D I N A T E S, F O R C E S A N D S T R A I N S

NODE NO.	PIPE SECTION	X COORD (M)	Y COORD (M)	VERT ANGLE (DEG)	PIPE LENGTH (M)	SUPPORT REACTION (KN)	SEPARA -TION (M)	AXIAL TENSION (KN)	BENDING MOMENT (KN-M)	TENSILE STRAIN (PCT)	BENDING STRAIN (PCT)	TOTAL STRAIN (PCT)	PERCNT ALLOW (PCT)
1	LAYBARGE	96.31	6.41	1.93	0.00	9.930	0.000	0.00	2.74	0.0000	0.0021	0.0021	0.00
3	LAYBARGE	84.28	6.05	1.58	12.04	24.161	0.000	-0.73	-19.22	0.0000	-0.0144	0.0144	0.00
5	LAYBARGE	73.45	5.73	1.90	22.87	24.344	0.000	-1.39	-29.34	-0.0001	-0.0219	0.0220	0.00
7	TENSIONR	60.10	5.24	2.31	36.23	32.138	0.000	144.92	-23.58	0.0067	-0.0176	0.0244	0.00
9	LAYBARGE	51.10	4.87	2.20	45.24	0.000	0.000	144.19	30.17	0.0067	0.0226	0.0293	0.00
10	LAYBARGE	46.45	4.70	1.91	49.89	9.459	0.000	143.87	13.33	0.0067	0.0100	0.0167	0.00
12	LAYBARGE	35.36	4.31	2.62	60.99	32.479	0.000	142.85	-80.74	0.0066	-0.0604	0.0670	0.00
14	LAYBARGE	25.34	3.64	5.23	71.03	42.372	0.000	141.30	-130.72	0.0066	-0.0978	0.1043	0.00
16	LAYBARGE	19.31	3.01	6.52	77.09	0.000	0.000	140.44	-38.25	0.0065	-0.0286	0.0351	0.00
17	LAYBARGE	8.88	1.76	7.20	87.60	34.953	0.000	137.91	-42.71	0.0064	-0.0319	0.0384	0.00
19	LAYBARGE	4.88	1.24	7.34	91.63	0.000	0.000	136.92	19.89	0.0064	0.0149	0.0212	0.00
20	LAYBARGE	3.05	1.01	7.19	93.48	0.000	0.392	136.42	42.36	0.0063	0.0317	0.0380	0.00
24	STINGER	-7.55	-0.16	5.26	104.14	0.000	0.450	134.16	71.89	0.0062	0.0538	0.0600	0.00
26	STINGER	-16.65	-0.90	4.29	113.27	16.142	0.000	133.54	0.87	0.0062	0.0007	0.0069	0.00
29	STINGER	-26.49	-1.62	4.09	123.14	10.414	0.000	132.82	0.00	0.0061	0.0000	0.0062	0.00
31	STINGER	-37.35	-2.86	7.36	134.07	3.885	0.000	132.92	0.00	0.0000	0.0000	0.0000	0.00
33	STINGER	-40.33	-3.29	8.19	137.08	0.000	0.364	132.94	0.00	0.0000	0.0000	0.0000	0.00
35	SAGBEND	-46.54	-4.18	8.18	143.35	0.000	0.000	132.94	0.00	0.0000	0.0000	0.0000	0.00
36	SAGBEND	-52.52	-5.04	8.18	149.40	0.000	0.000	132.93	0.00	0.0000	0.0000	0.0000	0.00
37	SAGBEND	-58.51	-5.90	8.17	155.45	0.000	0.000	132.93	0.00	0.0000	0.0000	0.0000	0.00
38	SAGBEND	-64.50	-6.76	8.16	161.50	0.000	0.000	132.93	0.00	0.0000	0.0000	0.0000	0.00
39	SAGBEND	-70.49	-7.62	8.16	167.55	0.000	0.000	132.93	0.00	0.0000	0.0000	0.0000	0.00
40	SAGBEND	-76.48	-8.48	8.15	173.60	0.000	0.000	132.92	0.00	0.0000	0.0000	0.0000	0.00
41	SAGBEND	-82.47	-9.34	8.14	179.65	0.000	0.000	132.92	0.00	0.0000	0.0000	0.0000	0.00
42	SAGBEND	-88.46	-10.19	8.14	185.70	0.000	0.000	132.92	0.00	0.0000	0.0000	0.0000	0.00
43	SAGBEND	-94.45	-11.05	8.13	191.75	0.000	0.000	132.92	0.00	0.0000	0.0000	0.0000	0.00
44	SAGBEND	-100.44	-11.90	8.12	197.80	0.000	0.000	132.92	0.00	0.0000	0.0000	0.0000	0.00
45	SAGBEND	-106.43	-12.76	8.11	203.85	0.000	0.000	132.91	0.00	0.0000	0.0000	0.0000	0.00
46	SAGBEND	-112.41	-13.61	8.11	209.90	0.000	0.000	132.91	0.00	0.0000	0.0000	0.0000	0.00
47	SAGBEND	-118.40	-14.46	8.10	215.95	0.000	0.000	132.91	0.00	0.0000	0.0000	0.0000	0.00
48	SAGBEND	-124.39	-15.32	8.09	222.00	0.000	0.000	132.91	0.00	0.0000	0.0000	0.0000	0.00
49	SAGBEND	-130.38	-16.17	8.09	228.05	0.000	0.000	132.90	0.00	0.0000	0.0000	0.0000	0.00
50	SAGBEND	-136.37	-17.02	8.08	234.10	0.000	0.000	132.90	0.00	0.0000	0.0000	0.0000	0.00
51	SAGBEND	-142.36	-17.87	8.07	240.15	0.000	0.000	132.90	0.00	0.0000	0.0000	0.0000	0.00
52	SAGBEND	-148.35	-18.72	8.07	246.20	0.000	0.000	132.90	0.00	0.0000	0.0000	0.0000	0.00
53	SAGBEND	-154.34	-19.57	8.06	252.25	0.000	0.000	132.90	0.00	0.0000	0.0000	0.0000	0.00
54	SAGBEND	-160.33	-20.41	8.05	258.30	0.000	0.000	132.89	0.00	0.0000	0.0000	0.0000	0.00
55	SAGBEND	-166.32	-21.26	8.05	264.35	0.000	0.000	132.89	0.00	0.0000	0.0000	0.0000	0.00
56	SAGBEND	-172.31	-22.11	8.04	270.40	0.000	0.000	132.89	0.00	0.0000	0.0000	0.0000	0.00
57	SAGBEND	-178.31	-22.95	8.03	276.45	0.000	0.000	132.89	0.00	0.0000	0.0000	0.0000	0.00
58	SAGBEND	-184.30	-23.80	8.03	282.50	0.000	0.000	132.88	0.00	0.0000	0.0000	0.0000	0.00
59	SAGBEND	-190.29	-24.64	8.02	288.55	0.000	0.000	132.88	0.00	0.0000	0.0000	0.0000	0.00
60	SAGBEND	-196.28	-25.49	8.01	294.60	0.000	0.000	132.88	0.00	0.0000	0.0000	0.0000	0.00

S T A T I C P I P E C O O R D I N A T E S, F O R C E S A N D S T R A I N S

NODE NO.	PIPE SECTION	X COORD	Y COORD	VERT ANGLE	PIPE LENGTH	SUPPORT REACTION	SEPARA -TION	AXIAL TENSION	BENDING MOMENT	TENSILE STRAIN	BENDING STRAIN	TOTAL STRAIN	PERCNT ALLOW

		(M)	(M)	(DEG)	(M)	(KN)	(M)	(KN)	(KN-M)	(PCT)	(PCT)	(PCT)	(PCT)
61	SAGBEND	-202.27	-26.33	8.01	300.65	0.000	0.000	132.88	0.00	0.0000	0.0000	0.0000	0.00
62	SAGBEND	-208.26	-27.17	8.00	306.70	0.000	0.000	132.88	0.00	0.0000	0.0000	0.0000	0.00
63	SAGBEND	-214.25	-28.01	7.99	312.75	0.000	0.000	132.87	0.00	0.0000	0.0000	0.0000	0.00
64	SAGBEND	-217.89	-28.53	7.99	316.43	0.000	0.000	132.87	0.00	0.0000	0.0000	0.0000	0.00
65	SAGBEND	-221.54	-29.04	7.99	320.11	0.000	0.000	132.87	0.00	0.0000	0.0000	0.0000	0.00
66	SAGBEND	-226.23	-29.69	7.79	324.85	0.000	0.000	132.81	0.00	0.0000	0.0000	0.0000	0.00
67	SAGBEND	-232.23	-30.50	7.55	330.90	0.000	0.000	132.73	0.00	0.0000	0.0000	0.0000	0.00
68	SAGBEND	-238.23	-31.28	7.30	336.95	0.000	0.000	132.66	0.00	0.0000	0.0000	0.0000	0.00
69	SAGBEND	-244.23	-32.03	7.06	343.00	0.000	0.000	132.59	0.00	0.0000	0.0000	0.0000	0.00
70	SAGBEND	-250.24	-32.77	6.81	349.05	0.000	0.000	132.52	0.00	0.0000	0.0000	0.0000	0.00
71	SAGBEND	-256.25	-33.47	6.57	355.10	0.000	0.000	132.45	0.00	0.0000	0.0000	0.0000	0.00
72	SAGBEND	-262.26	-34.15	6.32	361.15	0.000	0.000	132.39	0.00	0.0000	0.0000	0.0000	0.00
73	SAGBEND	-268.27	-34.80	6.08	367.20	0.000	0.000	132.33	0.00	0.0000	0.0000	0.0000	0.00
74	SAGBEND	-274.29	-35.43	5.83	373.25	0.000	0.000	132.27	0.00	0.0000	0.0000	0.0000	0.00
75	SAGBEND	-280.31	-36.03	5.58	379.30	0.000	0.000	132.21	0.00	0.0000	0.0000	0.0000	0.00
76	SAGBEND	-286.33	-36.61	5.34	385.35	0.000	0.000	132.16	0.00	0.0000	0.0000	0.0000	0.00
77	SAGBEND	-292.36	-37.16	5.09	391.40	0.000	0.000	132.10	0.00	0.0000	0.0000	0.0000	0.00
78	SAGBEND	-298.39	-37.68	4.84	397.45	0.000	0.000	132.05	0.00	0.0000	0.0000	0.0000	0.00
79	SAGBEND	-304.41	-38.18	4.60	403.50	0.000	0.000	132.01	0.00	0.0000	0.0000	0.0000	0.00
80	SAGBEND	-310.45	-38.65	4.35	409.55	0.000	0.000	131.96	0.00	0.0000	0.0000	0.0000	0.00
81	SAGBEND	-316.48	-39.10	4.10	415.60	0.000	0.000	131.92	0.00	0.0000	0.0000	0.0000	0.00
82	SAGBEND	-322.52	-39.52	3.85	421.65	0.000	0.000	131.88	0.00	0.0000	0.0000	0.0000	0.00
83	SAGBEND	-328.55	-39.91	3.61	427.70	0.000	0.000	131.84	0.00	0.0000	0.0000	0.0000	0.00
84	SAGBEND	-334.59	-40.28	3.36	433.75	0.000	0.000	131.81	0.00	0.0000	0.0000	0.0000	0.00
85	SAGBEND	-340.63	-40.62	3.11	439.80	0.000	0.000	131.78	0.00	0.0000	0.0000	0.0000	0.00
86	SAGBEND	-346.67	-40.93	2.86	445.85	0.000	0.000	131.75	0.00	0.0000	0.0000	0.0000	0.00
87	SAGBEND	-352.72	-41.22	2.61	451.90	0.000	0.000	131.72	0.00	0.0000	0.0000	0.0000	0.00
88	SAGBEND	-358.76	-41.49	2.36	457.95	0.000	0.000	131.69	0.00	0.0000	0.0000	0.0000	0.00
89	SAGBEND	-364.81	-41.72	2.12	464.00	0.000	0.000	131.67	0.00	0.0000	0.0000	0.0000	0.00
90	SAGBEND	-370.85	-41.93	1.87	470.05	0.000	0.000	131.65	0.00	0.0000	0.0000	0.0000	0.00
91	SAGBEND	-376.90	-42.12	1.62	476.10	0.000	0.000	131.63	0.00	0.0000	0.0000	0.0000	0.00
92	SAGBEND	-382.95	-42.27	1.37	482.15	0.000	0.000	131.62	0.00	0.0000	0.0000	0.0000	0.00
93	SAGBEND	-389.00	-42.41	1.12	488.20	0.000	0.000	131.61	0.00	0.0000	0.0000	0.0000	0.00
94	SAGBEND	-395.04	-42.51	0.87	494.25	0.000	0.000	131.60	0.00	0.0000	0.0000	0.0000	0.00
95	SAGBEND	-401.09	-42.59	0.62	500.30	0.000	0.000	131.59	0.00	0.0000	0.0000	0.0000	0.00
96	SAGBEND	-407.14	-42.64	0.37	506.35	0.000	0.000	131.59	0.00	0.0000	0.0000	0.0000	0.00
97	SAGBEND	-413.19	-42.67	0.12	512.40	0.091	0.000	131.58	0.00	0.0000	0.0000	0.0000	0.00
98	SEABED	-419.24	-42.67	0.01	518.45	0.485	0.000	131.58	0.01	0.0000	0.0000	0.0000	0.00
99	SEABED	-425.29	-42.67	0.00	524.50	0.566	0.000	131.58	0.00	0.0000	0.0000	0.0000	0.00
100	SEABED	-431.34	-42.67	0.00	530.55	0.571	0.000	131.58	0.00	0.0000	0.0000	0.0000	0.00
101	SEABED	-437.39	-42.67	0.00	536.60	0.572	0.000	131.58	0.00	0.0000	0.0000	0.0000	0.00
102	SEABED	-443.44	-42.67	0.00	542.65	0.572	0.000	131.58	0.00	0.0000	0.0000	0.0000	0.00
103	SEABED	-449.49	-42.67	0.00	548.70	0.572	0.000	131.58	0.00	0.0000	0.0000	0.0000	0.00
104	SEABED	-455.54	-42.67	0.00	554.75	0.572	0.000	131.58	0.00	0.0000	0.0000	0.0000	0.00

S T A T I C P I P E C O O R D I N A T E S, F O R C E S A N D S T R A I N S

NODE NO.	PIPE SECTION	X COORD (M)	Y COORD (M)	VERT ANGLE (DEG)	PIPE LENGTH (M)	SUPPORT REACTION (KN)	SEPARA -TION (M)	AXIAL TENSION (KN)	BENDING MOMENT (KN-M)	TENSILE STRAIN (PCT)	BENDING STRAIN (PCT)	TOTAL STRAIN (PCT)	PERCNT ALLOW (PCT)
105	SEABED	-461.59	-42.67	0.00	560.80	0.572	0.000	131.58	0.00	0.0000	0.0000	0.0000	0.00
106	SEABED	-467.64	-42.67	0.00	566.85	0.572	0.000	131.58	0.00	0.0000	0.0000	0.0000	0.00
107	SEABED	-473.69	-42.67	0.00	572.90	0.572	0.000	131.58	0.00	0.0000	0.0000	0.0000	0.00
108	SEABED	-479.74	-42.67	0.00	578.95	0.572	0.000	131.58	0.00	0.0000	0.0000	0.0000	0.00
109	SEABED	-485.79	-42.67	0.00	585.00	0.572	0.000	131.58	0.00	0.0000	0.0000	0.0000	0.00
110	SEABED	-491.84	-42.67	0.00	591.05	0.572	0.000	131.58	0.00	0.0000	0.0000	0.0000	0.00
111	SEABED	-497.89	-42.67	0.00	597.10	0.572	0.000	131.58	0.00	0.0000	0.0000	0.0000	0.00
112	SEABED	-503.94	-42.67	0.00	603.15	0.572	0.000	131.58	0.00	0.0000	0.0000	0.0000	0.00
113	SEABED	-509.99	-42.67	0.00	609.20	0.572	0.000	131.58	0.00	0.0000	0.0000	0.0000	0.00
114	SEABED	-516.04	-42.67	0.00	615.25	0.572	0.000	131.58	0.00	0.0000	0.0000	0.0000	0.00
115	SEABED	-522.09	-42.67	0.00	621.30	0.572	0.000	131.58	0.00	0.0000	0.0000	0.0000	0.00
116	SEABED	-528.14	-42.67	0.00	627.35	0.572	0.000	131.58	0.00	0.0000	0.0000	0.0000	0.00
117	SEABED	-534.19	-42.67	0.00	633.40	0.572	0.000	131.58	0.00	0.0000	0.0000	0.0000	0.00
118	SEABED	-540.24	-42.67	0.00	639.45	0.572	0.000	131.58	0.00	0.0000	0.0000	0.0000	0.00
119	SEABED	-546.29	-42.67	0.00	645.50	0.572	0.000	131.58	0.00	0.0000	0.0000	0.0000	0.00
120	SEABED	-552.34	-42.67	0.00	651.55	0.572	0.000	131.58	0.00	0.0000	0.0000	0.0000	0.00
121	SEABED	-558.39	-42.67	0.00	657.60	0.572	0.000	131.58	0.00	0.0000	0.0000	0.0000	0.00
122	SEABED	-564.44	-42.67	0.00	663.65	0.572	0.000	131.58	0.00	0.0000	0.0000	0.0000	0.00
123	SEABED	-570.49	-42.67	0.00	669.70	0.572	0.000	131.58	0.00	0.0000	0.0000	0.0000	0.00
124	SEABED	-576.54	-42.67	0.00	675.75	0.572	0.000	131.58	0.00	0.0000	0.0000	0.0000	0.00
125	SEABED	-582.59	-42.67	0.00	681.80	0.572	0.000	131.58	0.00	0.0000	0.0000	0.0000	0.00
126	SEABED	-588.64	-42.67	0.00	687.85	0.572	0.000	131.58	0.00	0.0000	0.0000	0.0000	0.00
127	SEABED	-594.69	-42.67	0.00	693.90	0.572	0.000	131.58	0.00	0.0000	0.0000	0.0000	0.00
128	SEABED	-600.74	-42.67	0.00	699.95	0.572	0.000	131.58	0.00	0.0000	0.0000	0.0000	0.00
129	SEABED	-606.79	-42.67	0.00	706.00	0.570	0.000	131.58	0.00	0.0000	0.0000	0.0000	0.00
130	SEABED	-612.84	-42.67	0.00	712.05	0.464	0.000	131.58	0.00	0.0000	0.0000	0.0000	0.00
131	SEABED	-616.87	-42.67	-0.01	716.08	0.305	0.000	131.58	0.00	0.0000	0.0000	0.0000	0.00
132	SEABED	-620.90	-42.67	-0.09	720.11	0.000	0.000	131.58	0.00	0.0000	0.0000	0.0000	0.00

S T A T I C P I P E C O O R D I N A T E S, F O R C E S A N D S T R A I N S

NODE NO.	PIPE SECTION	X COORD (M)	Y COORD (M)	VERT ANGLE (DEG)	PIPE LENGTH (M)	SUPPORT REACTION (KN)	SEPARA -TION (M)	AXIAL TENSION (KN)	BENDING MOMENT (KN-M)	TENSILE STRAIN (PCT)	BENDING STRAIN (PCT)	TOTAL STRAIN (PCT)	PERCNT ALLOW (PCT)
1	LAYBARGE	96.31	6.41	1.93	0.00	9.927	0.000	0.00	2.74	0.0000	0.0021	0.0021	0.00
3	LAYBARGE	84.28	6.05	1.58	12.04	24.176	0.000	-0.73	-19.25	0.0000	-0.0144	0.0144	0.00
5	LAYBARGE	73.45	5.73	1.90	22.87	24.294	0.000	-1.39	-29.25	-0.0001	-0.0219	0.0219	0.00
7	TENSIONR	60.10	5.24	2.31	36.23	32.306	0.000	144.91	-23.84	0.0067	-0.0178	0.0246	0.00
9	LAYBARGE	51.10	4.87	2.20	45.24	0.000	0.000	144.18	30.97	0.0067	0.0232	0.0299	0.00
10	LAYBARGE	46.45	4.70	1.90	49.89	8.581	0.000	143.87	14.63	0.0067	0.0109	0.0176	0.00
12	LAYBARGE	35.36	4.31	2.68	60.99	36.577	0.000	142.82	-84.33	0.0066	-0.0631	0.0697	0.00
14	LAYBARGE	25.34	3.64	5.04	71.03	31.791	0.000	141.45	-106.53	0.0066	-0.0797	0.0863	0.00
16	LAYBARGE	19.31	3.04	6.21	77.09	0.000	0.000	140.48	-50.37	0.0065	-0.0377	0.0442	0.00
17	LAYBARGE	8.88	1.76	8.23	87.60	50.974	0.000	137.50	-130.77	0.0064	-0.0978	0.1042	0.00
19	LAYBARGE	4.89	1.14	9.20	91.63	0.000	0.000	136.67	-51.19	0.0064	-0.0383	0.0446	0.00
20	LAYBARGE	3.07	0.84	9.37	93.48	0.000	0.224	136.12	-21.36	0.0063	-0.0160	0.0223	0.00
24	STINGER	-7.60	-0.88	8.61	104.29	0.000	0.217	133.50	51.16	0.0062	0.0383	0.0445	0.00
26	STINGER	-16.65	-2.16	7.63	113.43	4.123	0.000	132.27	21.67	0.0061	0.0162	0.0224	0.00
29	STINGER	-26.35	-3.45	7.78	123.22	23.356	0.000	130.94	-49.62	0.0060	-0.0371	0.0432	0.00
31	STINGER	-37.17	-4.99	8.18	134.15	0.000	0.069	129.46	0.00	0.0059	0.0000	0.0060	0.00
33	STINGER	-40.18	-5.39	7.72	137.18	0.000	0.559	129.46	0.00	0.0000	0.0000	0.0000	0.00
35	SAGBEND	-46.29	-6.22	7.72	143.35	0.000	0.000	129.46	0.00	0.0000	0.0000	0.0000	0.00
36	SAGBEND	-52.29	-7.04	7.71	149.40	0.000	0.000	129.45	0.00	0.0000	0.0000	0.0000	0.00
37	SAGBEND	-58.28	-7.85	7.70	155.45	0.000	0.000	129.45	0.00	0.0000	0.0000	0.0000	0.00
38	SAGBEND	-64.28	-8.66	7.70	161.50	0.000	0.000	129.45	0.00	0.0000	0.0000	0.0000	0.00
39	SAGBEND	-70.28	-9.47	7.69	167.55	0.000	0.000	129.45	0.00	0.0000	0.0000	0.0000	0.00
40	SAGBEND	-76.27	-10.28	7.68	173.60	0.000	0.000	129.45	0.00	0.0000	0.0000	0.0000	0.00
41	SAGBEND	-82.27	-11.08	7.67	179.65	0.000	0.000	129.44	0.00	0.0000	0.0000	0.0000	0.00
42	SAGBEND	-88.26	-11.89	7.67	185.70	0.000	0.000	129.44	0.00	0.0000	0.0000	0.0000	0.00
43	SAGBEND	-94.26	-12.70	7.66	191.75	0.000	0.000	129.44	0.00	0.0000	0.0000	0.0000	0.00
44	SAGBEND	-100.25	-13.50	7.65	197.80	0.000	0.000	129.44	0.00	0.0000	0.0000	0.0000	0.00
45	SAGBEND	-106.25	-14.31	7.65	203.85	0.000	0.000	129.44	0.00	0.0000	0.0000	0.0000	0.00
46	SAGBEND	-112.25	-15.11	7.64	209.90	0.000	0.000	129.43	0.00	0.0000	0.0000	0.0000	0.00
47	SAGBEND	-118.24	-15.92	7.63	215.95	0.000	0.000	129.43	0.00	0.0000	0.0000	0.0000	0.00
48	SAGBEND	-124.24	-16.72	7.63	222.00	0.000	0.000	129.43	0.00	0.0000	0.0000	0.0000	0.00
49	SAGBEND	-130.24	-17.52	7.62	228.05	0.000	0.000	129.43	0.00	0.0000	0.0000	0.0000	0.00
50	SAGBEND	-136.23	-18.33	7.61	234.10	0.000	0.000	129.43	0.00	0.0000	0.0000	0.0000	0.00
51	SAGBEND	-142.23	-19.13	7.60	240.15	0.000	0.000	129.42	0.00	0.0000	0.0000	0.0000	0.00
52	SAGBEND	-148.23	-19.93	7.60	246.20	0.000	0.000	129.42	0.00	0.0000	0.0000	0.0000	0.00
53	SAGBEND	-154.22	-20.73	7.59	252.25	0.000	0.000	129.42	0.00	0.0000	0.0000	0.0000	0.00
54	SAGBEND	-160.22	-21.53	7.58	258.30	0.000	0.000	129.42	0.00	0.0000	0.0000	0.0000	0.00
55	SAGBEND	-166.22	-22.32	7.58	264.35	0.000	0.000	129.41	0.00	0.0000	0.0000	0.0000	0.00
56	SAGBEND	-172.21	-23.12	7.57	270.40	0.000	0.000	129.41	0.00	0.0000	0.0000	0.0000	0.00
57	SAGBEND	-178.21	-23.92	7.56	276.45	0.000	0.000	129.41	0.00	0.0000	0.0000	0.0000	0.00
58	SAGBEND	-184.21	-24.71	7.56	282.50	0.000	0.000	129.41	0.00	0.0000	0.0000	0.0000	0.00
59	SAGBEND	-190.21	-25.51	7.55	288.55	0.000	0.000	129.41	0.00	0.0000	0.0000	0.0000	0.00
60	SAGBEND	-196.20	-26.30	7.54	294.60	0.000	0.000	129.40	0.00	0.0000	0.0000	0.0000	0.00

S T A T I C P I P E C O O R D I N A T E S, F O R C E S A N D S T R A I N S

NODE NO.	PIPE SECTION	X COORD (M)	Y COORD (M)	VERT ANGLE (DEG)	PIPE LENGTH (M)	SUPPORT REACTION (KN)	SEPARA -TION (M)	AXIAL TENSION (KN)	BENDING MOMENT (KN-M)	TENSILE STRAIN (PCT)	BENDING STRAIN (PCT)	TOTAL STRAIN (PCT)	PERCNT ALLOW (PCT)
61	SAGBEND	-202.20	-27.10	7.54	300.65	0.000	0.000	129.40	0.00	0.0000	0.0000	0.0000	0.00
62	SAGBEND	-208.20	-27.89	7.53	306.70	0.000	0.000	129.40	0.00	0.0000	0.0000	0.0000	0.00
63	SAGBEND	-214.20	-28.68	7.52	312.75	0.000	0.000	129.40	0.00	0.0000	0.0000	0.0000	0.00
64	SAGBEND	-220.19	-29.47	7.51	318.80	0.000	0.000	129.40	0.00	0.0000	0.0000	0.0000	0.00
65	SAGBEND	-226.19	-30.26	7.51	324.85	0.000	0.000	129.39	0.00	0.0000	0.0000	0.0000	0.00
66	SAGBEND	-231.41	-30.95	7.50	330.11	0.000	0.000	129.39	0.00	0.0000	0.0000	0.0000	0.00
67	SAGBEND	-238.19	-31.83	7.22	336.95	0.000	0.000	129.31	0.00	0.0000	0.0000	0.0000	0.00
68	SAGBEND	-244.20	-32.58	6.97	343.00	0.000	0.000	129.24	0.00	0.0000	0.0000	0.0000	0.00
69	SAGBEND	-250.20	-33.30	6.71	349.05	0.000	0.000	129.17	0.00	0.0000	0.0000	0.0000	0.00
70	SAGBEND	-256.21	-33.99	6.46	355.10	0.000	0.000	129.11	0.00	0.0000	0.0000	0.0000	0.00

71	SAGBEND	-262.22	-34.66	6.21	361.15	0.000	0.000	129.04	0.00	0.0000	0.0000	0.0000	0.00
72	SAGBEND	-268.24	-35.30	5.96	367.20	0.000	0.000	128.98	0.00	0.0000	0.0000	0.0000	0.00
73	SAGBEND	-274.26	-35.91	5.71	373.25	0.000	0.000	128.92	0.00	0.0000	0.0000	0.0000	0.00
74	SAGBEND	-280.28	-36.50	5.45	379.30	0.000	0.000	128.87	0.00	0.0000	0.0000	0.0000	0.00
75	SAGBEND	-286.30	-37.06	5.20	385.35	0.000	0.000	128.81	0.00	0.0000	0.0000	0.0000	0.00
76	SAGBEND	-292.33	-37.60	4.95	391.40	0.000	0.000	128.76	0.00	0.0000	0.0000	0.0000	0.00
77	SAGBEND	-298.36	-38.11	4.69	397.45	0.000	0.000	128.72	0.00	0.0000	0.0000	0.0000	0.00
78	SAGBEND	-304.39	-38.59	4.44	403.50	0.000	0.000	128.67	0.00	0.0000	0.0000	0.0000	0.00
79	SAGBEND	-310.42	-39.04	4.18	409.55	0.000	0.000	128.63	0.00	0.0000	0.0000	0.0000	0.00
80	SAGBEND	-316.46	-39.47	3.93	415.60	0.000	0.000	128.59	0.00	0.0000	0.0000	0.0000	0.00
81	SAGBEND	-322.49	-39.87	3.68	421.65	0.000	0.000	128.55	0.00	0.0000	0.0000	0.0000	0.00
82	SAGBEND	-328.53	-40.25	3.42	427.70	0.000	0.000	128.51	0.00	0.0000	0.0000	0.0000	0.00
83	SAGBEND	-334.57	-40.59	3.17	433.75	0.000	0.000	128.48	0.00	0.0000	0.0000	0.0000	0.00
84	SAGBEND	-340.61	-40.92	2.91	439.80	0.000	0.000	128.45	0.00	0.0000	0.0000	0.0000	0.00
85	SAGBEND	-346.66	-41.21	2.66	445.85	0.000	0.000	128.42	0.00	0.0000	0.0000	0.0000	0.00
86	SAGBEND	-352.70	-41.48	2.40	451.90	0.000	0.000	128.40	0.00	0.0000	0.0000	0.0000	0.00
87	SAGBEND	-358.75	-41.72	2.15	457.95	0.000	0.000	128.38	0.00	0.0000	0.0000	0.0000	0.00
88	SAGBEND	-364.79	-41.93	1.89	464.00	0.000	0.000	128.35	0.00	0.0000	0.0000	0.0000	0.00
89	SAGBEND	-370.84	-42.12	1.64	470.05	0.000	0.000	128.34	0.00	0.0000	0.0000	0.0000	0.00
90	SAGBEND	-376.89	-42.28	1.38	476.10	0.000	0.000	128.32	0.00	0.0000	0.0000	0.0000	0.00
91	SAGBEND	-382.93	-42.41	1.13	482.15	0.000	0.000	128.31	0.00	0.0000	0.0000	0.0000	0.00
92	SAGBEND	-388.98	-42.51	0.87	488.20	0.000	0.000	128.30	0.00	0.0000	0.0000	0.0000	0.00
93	SAGBEND	-395.03	-42.59	0.62	494.25	0.000	0.000	128.29	0.00	0.0000	0.0000	0.0000	0.00
94	SAGBEND	-401.08	-42.64	0.36	500.30	0.000	0.000	128.29	0.00	0.0000	0.0000	0.0000	0.00
95	SAGBEND	-407.13	-42.67	0.10	506.35	0.119	0.000	128.29	0.01	0.0000	0.0000	0.0000	0.00
96	SEABED	-413.18	-42.67	0.01	512.40	0.504	0.000	128.28	0.01	0.0000	0.0000	0.0000	0.00
97	SEABED	-419.23	-42.67	0.00	518.45	0.568	0.000	128.28	0.00	0.0000	0.0000	0.0000	0.00
98	SEABED	-425.28	-42.67	0.00	524.50	0.571	0.000	128.28	0.00	0.0000	0.0000	0.0000	0.00
99	SEABED	-431.33	-42.67	0.00	530.55	0.572	0.000	128.28	0.00	0.0000	0.0000	0.0000	0.00
100	SEABED	-437.38	-42.67	0.00	536.60	0.572	0.000	128.28	0.00	0.0000	0.0000	0.0000	0.00
101	SEABED	-443.43	-42.67	0.00	542.65	0.572	0.000	128.28	0.00	0.0000	0.0000	0.0000	0.00
102	SEABED	-449.48	-42.67	0.00	548.70	0.572	0.000	128.28	0.00	0.0000	0.0000	0.0000	0.00
103	SEABED	-455.53	-42.67	0.00	554.75	0.572	0.000	128.28	0.00	0.0000	0.0000	0.0000	0.00
104	SEABED	-461.58	-42.67	0.00	560.80	0.572	0.000	128.28	0.00	0.0000	0.0000	0.0000	0.00

S T A T I C P I P E C O O R D I N A T E S, F O R C E S A N D S T R A I N S

NODE NO.	PIPE SECTION	X COORD (M)	Y COORD (M)	VERT ANGLE (DEG)	PIPE LENGTH (M)	SUPPORT REACTION (KN)	SEPARA -TION (M)	AXIAL TENSION (KN)	BENDING MOMENT (KN-M)	TENSILE STRAIN (PCT)	BENDING STRAIN (PCT)	TOTAL STRAIN (PCT)	PERCNT ALLOW (PCT)
105	SEABED	-467.63	-42.67	0.00	566.85	0.572	0.000	128.28	0.00	0.0000	0.0000	0.0000	0.00
106	SEABED	-473.68	-42.67	0.00	572.90	0.572	0.000	128.28	0.00	0.0000	0.0000	0.0000	0.00
107	SEABED	-479.73	-42.67	0.00	578.95	0.572	0.000	128.28	0.00	0.0000	0.0000	0.0000	0.00
108	SEABED	-485.78	-42.67	0.00	585.00	0.572	0.000	128.28	0.00	0.0000	0.0000	0.0000	0.00
109	SEABED	-491.83	-42.67	0.00	591.05	0.572	0.000	128.28	0.00	0.0000	0.0000	0.0000	0.00
110	SEABED	-497.88	-42.67	0.00	597.10	0.572	0.000	128.28	0.00	0.0000	0.0000	0.0000	0.00
111	SEABED	-503.93	-42.67	0.00	603.15	0.572	0.000	128.28	0.00	0.0000	0.0000	0.0000	0.00
112	SEABED	-509.98	-42.67	0.00	609.20	0.572	0.000	128.28	0.00	0.0000	0.0000	0.0000	0.00
113	SEABED	-516.03	-42.67	0.00	615.25	0.572	0.000	128.28	0.00	0.0000	0.0000	0.0000	0.00
114	SEABED	-522.08	-42.67	0.00	621.30	0.572	0.000	128.28	0.00	0.0000	0.0000	0.0000	0.00
115	SEABED	-528.13	-42.67	0.00	627.35	0.572	0.000	128.28	0.00	0.0000	0.0000	0.0000	0.00
116	SEABED	-534.18	-42.67	0.00	633.39	0.572	0.000	128.28	0.00	0.0000	0.0000	0.0000	0.00
117	SEABED	-540.23	-42.67	0.00	639.44	0.572	0.000	128.28	0.00	0.0000	0.0000	0.0000	0.00
118	SEABED	-546.28	-42.67	0.00	645.49	0.572	0.000	128.28	0.00	0.0000	0.0000	0.0000	0.00
119	SEABED	-552.33	-42.67	0.00	651.54	0.572	0.000	128.28	0.00	0.0000	0.0000	0.0000	0.00
120	SEABED	-558.38	-42.67	0.00	657.59	0.572	0.000	128.28	0.00	0.0000	0.0000	0.0000	0.00
121	SEABED	-564.43	-42.67	0.00	663.64	0.572	0.000	128.28	0.00	0.0000	0.0000	0.0000	0.00
122	SEABED	-570.48	-42.67	0.00	669.69	0.572	0.000	128.28	0.00	0.0000	0.0000	0.0000	0.00
123	SEABED	-576.53	-42.67	0.00	675.74	0.572	0.000	128.28	0.00	0.0000	0.0000	0.0000	0.00
124	SEABED	-582.58	-42.67	0.00	681.79	0.572	0.000	128.28	0.00	0.0000	0.0000	0.0000	0.00
125	SEABED	-588.63	-42.67	0.00	687.84	0.572	0.000	128.28	0.00	0.0000	0.0000	0.0000	0.00
126	SEABED	-594.68	-42.67	0.00	693.89	0.572	0.000	128.28	0.00	0.0000	0.0000	0.0000	0.00
127	SEABED	-600.73	-42.67	0.00	699.94	0.572	0.000	128.28	0.00	0.0000	0.0000	0.0000	0.00
128	SEABED	-606.78	-42.67	0.00	705.99	0.572	0.000	128.28	0.00	0.0000	0.0000	0.0000	0.00
129	SEABED	-612.83	-42.67	0.00	712.04	0.572	0.000	128.28	0.00	0.0000	0.0000	0.0000	0.00
130	SEABED	-618.88	-42.67	0.00	718.09	0.568	0.000	128.28	0.00	0.0000	0.0000	0.0000	0.00
131	SEABED	-624.93	-42.67	-0.01	724.14	0.509	0.000	128.28	0.00	0.0000	0.0000	0.0000	0.00
132	SEABED	-630.89	-42.67	-0.08	730.10	0.000	0.000	128.29	0.00	0.0000	0.0000	0.0000	0.00

S T A T I C P I P E C O O R D I N A T E S, F O R C E S A N D S T R A I N S

NODE NO.	PIPE SECTION	X COORD (M)	Y COORD (M)	VERT ANGLE (DEG)	PIPE LENGTH (M)	SUPPORT REACTION (KN)	SEPARA -TION (M)	AXIAL TENSION (KN)	BENDING MOMENT (KN-M)	TENSILE STRAIN (PCT)	BENDING STRAIN (PCT)	TOTAL STRAIN (PCT)	PERCNT ALLOW (PCT)
1	LAYBARGE	96.31	6.41	1.93	0.00	9.928	0.000	0.00	2.74	0.0000	0.0021	0.0021	0.00
3	LAYBARGE	84.28	6.05	1.58	12.04	24.173	0.000	-0.73	-19.24	0.0000	-0.0144	0.0144	0.00
5	LAYBARGE	73.45	5.73	1.90	22.87	24.303	0.000	-1.39	-29.26	-0.0001	-0.0219	0.0220	0.00
7	TENSIONR	60.10	5.24	2.31	36.23	32.292	0.000	153.42	-23.79	0.0071	-0.0178	0.0249	0.00
9	LAYBARGE	51.10	4.87	2.20	45.24	0.000	0.000	152.69	30.84	0.0071	0.0231	0.0302	0.00
10	LAYBARGE	46.45	4.70	1.90	49.89	8.551	0.000	152.37	14.62	0.0071	0.0109	0.0180	0.00
12	LAYBARGE	35.36	4.31	2.67	60.99	36.679	0.000	151.32	-84.18	0.0070	-0.0630	0.0700	0.00
14	LAYBARGE	25.34	3.64	5.04	71.03	32.654	0.000	149.94	-107.89	0.0070	-0.0807	0.0877	0.00
16	LAYBARGE	19.31	3.04	6.22	77.09	0.000	0.000	148.98	-49.65	0.0069	-0.0371	0.0441	0.00
17	LAYBARGE	8.88	1.76	8.18	87.60	50.668	0.000	146.02	-127.50	0.0068	-0.0954	0.1022	0.00
19	LAYBARGE	4.89	1.14	9.13	91.63	0.000	0.000	145.18	-48.59	0.0068	-0.0363	0.0431	0.00
20	LAYBARGE	3.07	0.85	9.29	93.48	0.000	0.231	144.63	-19.16	0.0067	-0.0143	0.0211	0.00
24	STINGER	-7.60	-0.85	8.49	104.28	0.000	0.226	142.03	51.38	0.0066	0.0384	0.0450	0.00
26	STINGER	-16.65	-2.11	7.52	113.42	4.156	0.000	140.82	21.51	0.0065	0.0161	0.0226	0.00
29	STINGER	-26.36	-3.38	7.66	123.21	23.334	0.000	139.50	-49.25	0.0064	-0.0368	0.0433	0.00
31	STINGER	-37.18	-4.90	8.06	134.15	0.000	0.081	138.04	0.00	0.0063	0.0000	0.0064	0.00
33	STINGER	-40.19	-5.30	7.61	137.17	0.000	0.574	138.05	0.00	0.0000	0.0000	0.0000	0.00
35	SAGBEND	-46.31	-6.12	7.60	143.35	0.000	0.000	138.05	0.00	0.0000	0.0000	0.0000	0.00
36	SAGBEND	-52.31	-6.92	7.60	149.40	0.000	0.000	138.04	0.00	0.0000	0.0000	0.0000	0.00
37	SAGBEND	-58.30	-7.72	7.59	155.45	0.000	0.000	138.04	0.00	0.0000	0.0000	0.0000	0.00
38	SAGBEND	-64.30	-8.52	7.58	161.50	0.000	0.000	138.04	0.00	0.0000	0.0000	0.0000	0.00
39	SAGBEND	-70.30	-9.31	7.58	167.55	0.000	0.000	138.04	0.00	0.0000	0.0000	0.0000	0.00
40	SAGBEND	-76.29	-10.11	7.57	173.60	0.000	0.000	138.04	0.00	0.0000	0.0000	0.0000	0.00
41	SAGBEND	-82.29	-10.91	7.56	179.65	0.000	0.000	138.03	0.00	0.0000	0.0000	0.0000	0.00
42	SAGBEND	-88.29	-11.70	7.56	185.70	0.000	0.000	138.03	0.00	0.0000	0.0000	0.0000	0.00
43	SAGBEND	-94.29	-12.50	7.55	191.75	0.000	0.000	138.03	0.00	0.0000	0.0000	0.0000	0.00
44	SAGBEND	-100.28	-13.29	7.54	197.80	0.000	0.000	138.03	0.00	0.0000	0.0000	0.0000	0.00
45	SAGBEND	-106.28	-14.09	7.54	203.85	0.000	0.000	138.02	0.00	0.0000	0.0000	0.0000	0.00
46	SAGBEND	-112.28	-14.88	7.53	209.90	0.000	0.000	138.02	0.00	0.0000	0.0000	0.0000	0.00
47	SAGBEND	-118.28	-15.67	7.52	215.95	0.000	0.000	138.02	0.00	0.0000	0.0000	0.0000	0.00
48	SAGBEND	-124.27	-16.47	7.52	222.00	0.000	0.000	138.02	0.00	0.0000	0.0000	0.0000	0.00
49	SAGBEND	-130.27	-17.26	7.51	228.05	0.000	0.000	138.02	0.00	0.0000	0.0000	0.0000	0.00
50	SAGBEND	-136.27	-18.05	7.51	234.10	0.000	0.000	138.01	0.00	0.0000	0.0000	0.0000	0.00
51	SAGBEND	-142.27	-18.84	7.50	240.15	0.000	0.000	138.01	0.00	0.0000	0.0000	0.0000	0.00
52	SAGBEND	-148.27	-19.63	7.49	246.20	0.000	0.000	138.01	0.00	0.0000	0.0000	0.0000	0.00
53	SAGBEND	-154.27	-20.42	7.49	252.25	0.000	0.000	138.01	0.00	0.0000	0.0000	0.0000	0.00
54	SAGBEND	-160.26	-21.20	7.48	258.30	0.000	0.000	138.01	0.00	0.0000	0.0000	0.0000	0.00
55	SAGBEND	-166.26	-21.99	7.47	264.35	0.000	0.000	138.00	0.00	0.0000	0.0000	0.0000	0.00
56	SAGBEND	-172.26	-22.78	7.47	270.40	0.000	0.000	138.00	0.00	0.0000	0.0000	0.0000	0.00
57	SAGBEND	-178.26	-23.56	7.46	276.45	0.000	0.000	138.00	0.00	0.0000	0.0000	0.0000	0.00
58	SAGBEND	-184.26	-24.35	7.45	282.50	0.000	0.000	138.00	0.00	0.0000	0.0000	0.0000	0.00
59	SAGBEND	-190.26	-25.13	7.45	288.55	0.000	0.000	138.00	0.00	0.0000	0.0000	0.0000	0.00
60	SAGBEND	-196.26	-25.92	7.44	294.60	0.000	0.000	137.99	0.00	0.0000	0.0000	0.0000	0.00

S T A T I C P I P E C O O R D I N A T E S, F O R C E S A N D S T R A I N S

NODE NO.	PIPE SECTION	X COORD (M)	Y COORD (M)	VERT ANGLE (DEG)	PIPE LENGTH (M)	SUPPORT REACTION (KN)	SEPARA -TION (M)	AXIAL TENSION (KN)	BENDING MOMENT (KN-M)	TENSILE STRAIN (PCT)	BENDING STRAIN (PCT)	TOTAL STRAIN (PCT)	PERCNT ALLOW (PCT)
61	SAGBEND	-202.26	-26.70	7.43	300.65	0.000	0.000	137.99	0.00	0.0000	0.0000	0.0000	0.00
62	SAGBEND	-208.25	-27.48	7.43	306.70	0.000	0.000	137.99	0.00	0.0000	0.0000	0.0000	0.00
63	SAGBEND	-214.25	-28.26	7.42	312.75	0.000	0.000	137.99	0.00	0.0000	0.0000	0.0000	0.00
64	SAGBEND	-220.25	-29.04	7.41	318.80	0.000	0.000	137.99	0.00	0.0000	0.0000	0.0000	0.00
65	SAGBEND	-226.25	-29.82	7.41	324.85	0.000	0.000	137.98	0.00	0.0000	0.0000	0.0000	0.00
66	SAGBEND	-231.47	-30.50	7.40	330.11	0.000	0.000	137.98	0.00	0.0000	0.0000	0.0000	0.00
67	SAGBEND	-238.25	-31.37	7.14	336.95	0.000	0.000	137.90	0.00	0.0000	0.0000	0.0000	0.00
68	SAGBEND	-244.26	-32.11	6.90	343.00	0.000	0.000	137.83	0.00	0.0000	0.0000	0.0000	0.00
69	SAGBEND	-250.27	-32.82	6.66	349.05	0.000	0.000	137.76	0.00	0.0000	0.0000	0.0000	0.00
70	SAGBEND	-256.28	-33.51	6.43	355.10	0.000	0.000	137.70	0.00	0.0000	0.0000	0.0000	0.00
71	SAGBEND	-262.29	-34.18	6.19	361.15	0.000	0.000	137.63	0.00	0.0000	0.0000	0.0000	0.00
72	SAGBEND	-268.31	-34.82	5.95	367.20	0.000	0.000	137.57	0.00	0.0000	0.0000	0.0000	0.00
73	SAGBEND	-274.32	-35.43	5.72	373.25	0.000	0.000	137.52	0.00	0.0000	0.0000	0.0000	0.00
74	SAGBEND	-280.35	-36.02	5.48	379.30	0.000	0.000	137.46	0.00	0.0000	0.0000	0.0000	0.00
75	SAGBEND	-286.37	-36.59	5.24	385.35	0.000	0.000	137.41	0.00	0.0000	0.0000	0.0000	0.00
76	SAGBEND	-292.39	-37.13	5.01	391.40	0.000	0.000	137.36	0.00	0.0000	0.0000	0.0000	0.00
77	SAGBEND	-298.42	-37.64	4.77	397.45	0.000	0.000	137.31	0.00	0.0000	0.0000	0.0000	0.00
78	SAGBEND	-304.45	-38.13	4.53	403.50	0.000	0.000	137.26	0.00	0.0000	0.0000	0.0000	0.00
79	SAGBEND	-310.48	-38.60	4.29	409.55	0.000	0.000	137.22	0.00	0.0000	0.0000	0.0000	0.00
80	SAGBEND	-316.52	-39.04	4.05	415.60	0.000	0.000	137.18	0.00	0.0000	0.0000	0.0000	0.00
81	SAGBEND	-322.55	-39.45	3.82	421.65	0.000	0.000	137.14	0.00	0.0000	0.0000	0.0000	0.00
82	SAGBEND	-328.59	-39.84	3.58	427.70	0.000	0.000	137.10	0.00	0.0000	0.0000	0.0000	0.00

83	SAGBEND	-334.63	-40.21	3.34	433.75	0.000	0.000	137.06	0.00	0.0000	0.0000	0.0000	0.00
84	SAGBEND	-340.67	-40.55	3.10	439.80	0.000	0.000	137.03	0.00	0.0000	0.0000	0.0000	0.00
85	SAGBEND	-346.71	-40.86	2.86	445.85	0.000	0.000	137.00	0.00	0.0000	0.0000	0.0000	0.00
86	SAGBEND	-352.76	-41.15	2.62	451.90	0.000	0.000	136.98	0.00	0.0000	0.0000	0.0000	0.00
87	SAGBEND	-358.80	-41.42	2.38	457.95	0.000	0.000	136.95	0.00	0.0000	0.0000	0.0000	0.00
88	SAGBEND	-364.84	-41.66	2.15	464.00	0.000	0.000	136.93	0.00	0.0000	0.0000	0.0000	0.00
89	SAGBEND	-370.89	-41.87	1.91	470.05	0.000	0.000	136.91	0.00	0.0000	0.0000	0.0000	0.00
90	SAGBEND	-376.94	-42.06	1.67	476.10	0.000	0.000	136.89	0.00	0.0000	0.0000	0.0000	0.00
91	SAGBEND	-382.99	-42.22	1.43	482.15	0.000	0.000	136.87	0.00	0.0000	0.0000	0.0000	0.00
92	SAGBEND	-389.03	-42.36	1.19	488.20	0.000	0.000	136.86	0.00	0.0000	0.0000	0.0000	0.00
93	SAGBEND	-395.08	-42.47	0.95	494.25	0.000	0.000	136.85	0.00	0.0000	0.0000	0.0000	0.00
94	SAGBEND	-401.13	-42.56	0.71	500.30	0.000	0.000	136.84	0.00	0.0000	0.0000	0.0000	0.00
95	SAGBEND	-407.18	-42.62	0.47	506.35	0.000	0.000	136.84	0.00	0.0000	0.0000	0.0000	0.00
96	SAGBEND	-413.23	-42.66	0.23	512.40	0.007	0.000	136.83	-0.01	0.0000	0.0000	0.0000	0.00
97	SEABED	-419.28	-42.67	0.03	518.45	0.321	0.000	136.83	-0.01	0.0000	0.0000	0.0000	0.00
98	SEABED	-425.33	-42.67	0.00	524.50	0.551	0.000	136.83	0.00	0.0000	0.0000	0.0000	0.00
99	SEABED	-431.38	-42.67	0.00	530.55	0.570	0.000	136.83	0.00	0.0000	0.0000	0.0000	0.00
100	SEABED	-437.43	-42.67	0.00	536.60	0.572	0.000	136.83	0.00	0.0000	0.0000	0.0000	0.00
101	SEABED	-443.48	-42.67	0.00	542.65	0.572	0.000	136.83	0.00	0.0000	0.0000	0.0000	0.00
102	SEABED	-449.53	-42.67	0.00	548.70	0.572	0.000	136.83	0.00	0.0000	0.0000	0.0000	0.00
103	SEABED	-455.58	-42.67	0.00	554.75	0.572	0.000	136.83	0.00	0.0000	0.0000	0.0000	0.00
104	SEABED	-461.63	-42.67	0.00	560.80	0.572	0.000	136.83	0.00	0.0000	0.0000	0.0000	0.00

S T A T I C P I P E C O O R D I N A T E S, F O R C E S A N D S T R A I N S

NODE NO.	PIPE SECTION	X COORD (M)	Y COORD (M)	VERT ANGLE (DEG)	PIPE LENGTH (M)	SUPPORT REACTION (KN)	SEPARA -TION (M)	AXIAL TENSION (KN)	BENDING MOMENT (KN-M)	TENSILE STRAIN (PCT)	BENDING STRAIN (PCT)	TOTAL STRAIN (PCT)	PERCNT ALLOW (PCT)
105	SEABED	-467.68	-42.67	0.00	566.85	0.572	0.000	136.83	0.00	0.0000	0.0000	0.0000	0.00
106	SEABED	-473.73	-42.67	0.00	572.90	0.572	0.000	136.83	0.00	0.0000	0.0000	0.0000	0.00
107	SEABED	-479.78	-42.67	0.00	578.95	0.572	0.000	136.83	0.00	0.0000	0.0000	0.0000	0.00
108	SEABED	-485.83	-42.67	0.00	585.00	0.572	0.000	136.83	0.00	0.0000	0.0000	0.0000	0.00
109	SEABED	-491.88	-42.67	0.00	591.05	0.572	0.000	136.83	0.00	0.0000	0.0000	0.0000	0.00
110	SEABED	-497.93	-42.67	0.00	597.10	0.572	0.000	136.83	0.00	0.0000	0.0000	0.0000	0.00
111	SEABED	-503.98	-42.67	0.00	603.15	0.572	0.000	136.83	0.00	0.0000	0.0000	0.0000	0.00
112	SEABED	-510.03	-42.67	0.00	609.20	0.572	0.000	136.83	0.00	0.0000	0.0000	0.0000	0.00
113	SEABED	-516.08	-42.67	0.00	615.25	0.572	0.000	136.83	0.00	0.0000	0.0000	0.0000	0.00
114	SEABED	-522.13	-42.67	0.00	621.30	0.572	0.000	136.83	0.00	0.0000	0.0000	0.0000	0.00
115	SEABED	-528.18	-42.67	0.00	627.35	0.572	0.000	136.83	0.00	0.0000	0.0000	0.0000	0.00
116	SEABED	-534.23	-42.67	0.00	633.40	0.572	0.000	136.83	0.00	0.0000	0.0000	0.0000	0.00
117	SEABED	-540.28	-42.67	0.00	639.45	0.572	0.000	136.83	0.00	0.0000	0.0000	0.0000	0.00
118	SEABED	-546.33	-42.67	0.00	645.50	0.572	0.000	136.83	0.00	0.0000	0.0000	0.0000	0.00
119	SEABED	-552.38	-42.67	0.00	651.54	0.572	0.000	136.83	0.00	0.0000	0.0000	0.0000	0.00
120	SEABED	-558.43	-42.67	0.00	657.59	0.572	0.000	136.83	0.00	0.0000	0.0000	0.0000	0.00
121	SEABED	-564.48	-42.67	0.00	663.64	0.572	0.000	136.83	0.00	0.0000	0.0000	0.0000	0.00
122	SEABED	-570.53	-42.67	0.00	669.69	0.572	0.000	136.83	0.00	0.0000	0.0000	0.0000	0.00
123	SEABED	-576.58	-42.67	0.00	675.74	0.572	0.000	136.83	0.00	0.0000	0.0000	0.0000	0.00
124	SEABED	-582.63	-42.67	0.00	681.79	0.572	0.000	136.83	0.00	0.0000	0.0000	0.0000	0.00
125	SEABED	-588.68	-42.67	0.00	687.84	0.572	0.000	136.83	0.00	0.0000	0.0000	0.0000	0.00
126	SEABED	-594.73	-42.67	0.00	693.89	0.572	0.000	136.83	0.00	0.0000	0.0000	0.0000	0.00
127	SEABED	-600.78	-42.67	0.00	699.94	0.572	0.000	136.83	0.00	0.0000	0.0000	0.0000	0.00
128	SEABED	-606.83	-42.67	0.00	705.99	0.572	0.000	136.83	0.00	0.0000	0.0000	0.0000	0.00
129	SEABED	-612.88	-42.67	0.00	712.04	0.571	0.000	136.83	0.00	0.0000	0.0000	0.0000	0.00
130	SEABED	-618.93	-42.67	0.00	718.09	0.567	0.000	136.83	0.00	0.0000	0.0000	0.0000	0.00
131	SEABED	-624.98	-42.67	-0.01	724.14	0.506	0.000	136.83	0.00	0.0000	0.0000	0.0000	0.00
132	SEABED	-630.94	-42.67	-0.08	730.10	0.000	0.000	136.83	0.00	0.0000	0.0000	0.0000	0.00

S T A T I C P I P E C O O R D I N A T E S, F O R C E S A N D S T R A I N S

NODE NO.	PIPE SECTION	X COORD (M)	Y COORD (M)	VERT ANGLE (DEG)	PIPE LENGTH (M)	SUPPORT REACTION (KN)	SEPARA -TION (M)	AXIAL TENSION (KN)	BENDING MOMENT (KN-M)	TENSILE STRAIN (PCT)	BENDING STRAIN (PCT)	TOTAL STRAIN (PCT)	PERCNT ALLOW (PCT)
1	LAYBARGE	96.31	6.41	1.93	0.00	9.927	0.000	0.00	2.74	0.0000	0.0021	0.0021	0.00
3	LAYBARGE	84.28	6.05	1.58	12.04	24.177	0.000	-0.73	-19.25	0.0000	-0.0144	0.0144	0.00
5	LAYBARGE	73.45	5.73	1.90	22.87	24.292	0.000	-1.39	-29.24	-0.0001	-0.0219	0.0219	0.00
7	TENSIONR	60.10	5.24	2.31	36.23	32.328	0.000	153.41	-23.84	0.0071	-0.0178	0.0250	0.00
9	LAYBARGE	51.10	4.87	2.20	45.24	0.000	0.000	152.68	31.01	0.0071	0.0232	0.0303	0.00
10	LAYBARGE	46.45	4.70	1.90	49.89	8.358	0.000	152.37	14.91	0.0071	0.0111	0.0182	0.00
12	LAYBARGE	35.36	4.31	2.68	60.99	37.578	0.000	151.31	-84.97	0.0070	-0.0635	0.0706	0.00
14	LAYBARGE	25.34	3.64	5.00	71.03	30.323	0.000	149.97	-102.58	0.0070	-0.0767	0.0837	0.00
16	LAYBARGE	19.31	3.04	6.15	77.09	0.000	0.000	148.99	-52.30	0.0069	-0.0391	0.0460	0.00
17	LAYBARGE	8.88	1.76	8.41	87.60	54.268	0.000	145.88	-146.93	0.0068	-0.1100	0.1168	0.00
19	LAYBARGE	4.90	1.12	9.54	91.63	0.000	0.000	145.10	-64.21	0.0067	-0.0480	0.0548	0.00
20	LAYBARGE	3.08	0.81	9.77	93.48	0.000	0.194	144.54	-33.14	0.0067	-0.0248	0.0315	0.00
24	STINGER	-7.63	-1.01	9.24	104.34	0.000	0.177	141.88	45.19	0.0066	0.0338	0.0404	0.00
26	STINGER	-16.67	-2.41	8.35	113.49	3.878	0.000	140.53	20.20	0.0065	0.0151	0.0216	0.00
29	STINGER	-26.35	-3.82	8.51	123.27	23.543	0.000	139.07	-48.79	0.0064	-0.0365	0.0430	0.00
31	STINGER	-37.15	-5.49	8.82	134.20	0.000	0.038	137.46	5.67	0.0062	0.0042	0.0106	0.00
33	STINGER	-40.11	-5.94	8.80	137.19	0.000	0.499	137.00	0.00	0.0062	0.0000	0.0064	0.00
35	SAGBEND	-46.22	-6.74	7.39	143.36	0.000	0.000	137.04	0.00	0.0000	0.0000	0.0000	0.00
36	SAGBEND	-52.22	-7.52	7.38	149.41	0.000	0.000	137.04	0.00	0.0000	0.0000	0.0000	0.00
37	SAGBEND	-58.22	-8.29	7.38	155.46	0.000	0.000	137.03	0.00	0.0000	0.0000	0.0000	0.00
38	SAGBEND	-64.22	-9.07	7.37	161.50	0.000	0.000	137.03	0.00	0.0000	0.0000	0.0000	0.00
39	SAGBEND	-70.22	-9.84	7.36	167.55	0.000	0.000	137.03	0.00	0.0000	0.0000	0.0000	0.00
40	SAGBEND	-76.22	-10.62	7.36	173.60	0.000	0.000	137.03	0.00	0.0000	0.0000	0.0000	0.00
41	SAGBEND	-82.22	-11.39	7.35	179.65	0.000	0.000	137.03	0.00	0.0000	0.0000	0.0000	0.00
42	SAGBEND	-88.22	-12.17	7.34	185.70	0.000	0.000	137.02	0.00	0.0000	0.0000	0.0000	0.00
43	SAGBEND	-94.22	-12.94	7.34	191.75	0.000	0.000	137.02	0.00	0.0000	0.0000	0.0000	0.00
44	SAGBEND	-100.22	-13.71	7.33	197.80	0.000	0.000	137.02	0.00	0.0000	0.0000	0.0000	0.00
45	SAGBEND	-106.22	-14.48	7.32	203.85	0.000	0.000	137.02	0.00	0.0000	0.0000	0.0000	0.00
46	SAGBEND	-112.22	-15.26	7.32	209.90	0.000	0.000	137.02	0.00	0.0000	0.0000	0.0000	0.00
47	SAGBEND	-118.22	-16.03	7.31	215.95	0.000	0.000	137.01	0.00	0.0000	0.0000	0.0000	0.00
48	SAGBEND	-124.22	-16.80	7.30	222.00	0.000	0.000	137.01	0.00	0.0000	0.0000	0.0000	0.00
49	SAGBEND	-130.22	-17.56	7.30	228.05	0.000	0.000	137.01	0.00	0.0000	0.0000	0.0000	0.00
50	SAGBEND	-136.23	-18.33	7.29	234.10	0.000	0.000	137.01	0.00	0.0000	0.0000	0.0000	0.00
51	SAGBEND	-142.23	-19.10	7.28	240.15	0.000	0.000	137.01	0.00	0.0000	0.0000	0.0000	0.00
52	SAGBEND	-148.23	-19.87	7.28	246.20	0.000	0.000	137.00	0.00	0.0000	0.0000	0.0000	0.00
53	SAGBEND	-154.23	-20.63	7.27	252.25	0.000	0.000	137.00	0.00	0.0000	0.0000	0.0000	0.00
54	SAGBEND	-160.23	-21.40	7.27	258.30	0.000	0.000	137.00	0.00	0.0000	0.0000	0.0000	0.00
55	SAGBEND	-166.23	-22.16	7.26	264.35	0.000	0.000	137.00	0.00	0.0000	0.0000	0.0000	0.00
56	SAGBEND	-172.23	-22.93	7.25	270.40	0.000	0.000	137.00	0.00	0.0000	0.0000	0.0000	0.00
57	SAGBEND	-178.24	-23.69	7.25	276.45	0.000	0.000	136.99	0.00	0.0000	0.0000	0.0000	0.00
58	SAGBEND	-184.24	-24.45	7.24	282.50	0.000	0.000	136.99	0.00	0.0000	0.0000	0.0000	0.00
59	SAGBEND	-190.24	-25.21	7.23	288.55	0.000	0.000	136.99	0.00	0.0000	0.0000	0.0000	0.00
60	SAGBEND	-196.24	-25.98	7.23	294.60	0.000	0.000	136.99	0.00	0.0000	0.0000	0.0000	0.00

S T A T I C P I P E C O O R D I N A T E S, F O R C E S A N D S T R A I N S

NODE NO.	PIPE SECTION	X COORD (M)	Y COORD (M)	VERT ANGLE (DEG)	PIPE LENGTH (M)	SUPPORT REACTION (KN)	SEPARA -TION (M)	AXIAL TENSION (KN)	BENDING MOMENT (KN-M)	TENSILE STRAIN (PCT)	BENDING STRAIN (PCT)	TOTAL STRAIN (PCT)	PERCNT ALLOW (PCT)
61	SAGBEND	-202.24	-26.74	7.22	300.65	0.000	0.000	136.99	0.00	0.0000	0.0000	0.0000	0.00
62	SAGBEND	-208.24	-27.50	7.21	306.70	0.000	0.000	136.98	0.00	0.0000	0.0000	0.0000	0.00
63	SAGBEND	-214.25	-28.26	7.21	312.75	0.000	0.000	136.98	0.00	0.0000	0.0000	0.0000	0.00
64	SAGBEND	-220.25	-29.01	7.20	318.80	0.000	0.000	136.98	0.00	0.0000	0.0000	0.0000	0.00
65	SAGBEND	-226.25	-29.77	7.19	324.85	0.000	0.000	136.98	0.00	0.0000	0.0000	0.0000	0.00
66	SAGBEND	-232.25	-30.53	7.19	330.90	0.000	0.000	136.98	0.00	0.0000	0.0000	0.0000	0.00
67	SAGBEND	-235.33	-30.92	7.18	334.01	0.000	0.000	136.98	0.00	0.0000	0.0000	0.0000	0.00
68	SAGBEND	-238.41	-31.31	7.18	337.11	0.000	0.000	136.97	0.00	0.0000	0.0000	0.0000	0.00
69	SAGBEND	-244.26	-32.03	6.95	343.00	0.000	0.000	136.91	0.00	0.0000	0.0000	0.0000	0.00
70	SAGBEND	-250.27	-32.75	6.71	349.05	0.000	0.000	136.84	0.00	0.0000	0.0000	0.0000	0.00
71	SAGBEND	-256.28	-33.44	6.47	355.10	0.000	0.000	136.77	0.00	0.0000	0.0000	0.0000	0.00
72	SAGBEND	-262.29	-34.11	6.24	361.15	0.000	0.000	136.71	0.00	0.0000	0.0000	0.0000	0.00
73	SAGBEND	-268.31	-34.76	6.00	367.20	0.000	0.000	136.65	0.00	0.0000	0.0000	0.0000	0.00
74	SAGBEND	-274.32	-35.38	5.76	373.25	0.000	0.000	136.59	0.00	0.0000	0.0000	0.0000	0.00
75	SAGBEND	-280.34	-35.97	5.52	379.30	0.000	0.000	136.53	0.00	0.0000	0.0000	0.0000	0.00
76	SAGBEND	-286.37	-36.54	5.28	385.35	0.000	0.000	136.48	0.00	0.0000	0.0000	0.0000	0.00
77	SAGBEND	-292.39	-37.09	5.04	391.40	0.000	0.000	136.43	0.00	0.0000	0.0000	0.0000	0.00
78	SAGBEND	-298.42	-37.60	4.80	397.45	0.000	0.000	136.38	0.00	0.0000	0.0000	0.0000	0.00
79	SAGBEND	-304.45	-38.10	4.56	403.50	0.000	0.000	136.33	0.00	0.0000	0.0000	0.0000	0.00
80	SAGBEND	-310.48	-38.57	4.32	409.55	0.000	0.000	136.29	0.00	0.0000	0.0000	0.0000	0.00
81	SAGBEND	-316.52	-39.01	4.08	415.60	0.000	0.000	136.25	0.00	0.0000	0.0000	0.0000	0.00
82	SAGBEND	-322.55	-39.43	3.84	421.65	0.000	0.000	136.21	0.00	0.0000	0.0000	0.0000	0.00
83	SAGBEND	-328.59	-39.82	3.60	427.70	0.000	0.000	136.17	0.00	0.0000	0.0000	0.0000	0.00
84	SAGBEND	-334.63	-40.19	3.36	433.75	0.000	0.000	136.13	0.00	0.0000	0.0000	0.0000	0.00
85	SAGBEND	-340.67	-40.53	3.12	439.80	0.000	0.000	136.10	0.00	0.0000	0.0000	0.0000	0.00
86	SAGBEND	-346.71	-40.85	2.88	445.85	0.000	0.000	136.07	0.00	0.0000	0.0000	0.0000	0.00
87	SAGBEND	-352.75	-41.14	2.64	451.90	0.000	0.000	136.04	0.00	0.0000	0.0000	0.0000	0.00
88	SAGBEND	-358.80	-41.41	2.40	457.95	0.000	0.000	136.02	0.00	0.0000	0.0000	0.0000	0.00
89	SAGBEND	-364.84	-41.65	2.16	464.00	0.000	0.000	136.00	0.00	0.0000	0.0000	0.0000	0.00
90	SAGBEND	-370.89	-41.86	1.92	470.05	0.000	0.000	135.98	0.00	0.0000	0.0000	0.0000	0.00
91	SAGBEND	-376.93	-42.05	1.68	476.10	0.000	0.000	135.96	0.00	0.0000	0.0000	0.0000	0.00
92	SAGBEND	-382.98	-42.22	1.44	482.15	0.000	0.000	135.94	0.00	0.0000	0.0000	0.0000	0.00
93	SAGBEND	-389.03	-42.36	1.20	488.20	0.000	0.000	135.93	0.00	0.0000	0.0000	0.0000	0.00
94	SAGBEND	-395.08	-42.47	0.96	494.25	0.000	0.000	135.92	0.00	0.0000	0.0000	0.0000	0.00

95	SAGBEND	-401.13	-42.56	0.72	500.30	0.000	0.000	135.91	0.00	0.0000	0.0000	0.0000	0.00
96	SAGBEND	-407.18	-42.62	0.48	506.35	0.000	0.000	135.90	0.00	0.0000	0.0000	0.0000	0.00
97	SAGBEND	-413.23	-42.66	0.24	512.40	0.006	0.000	135.90	-0.01	0.0000	0.0000	0.0000	0.00
98	SEABED	-419.28	-42.67	0.03	518.45	0.318	0.000	135.90	-0.01	0.0000	0.0000	0.0000	0.00
99	SEABED	-425.33	-42.67	0.00	524.50	0.551	0.000	135.90	0.00	0.0000	0.0000	0.0000	0.00
100	SEABED	-431.38	-42.67	0.00	530.55	0.570	0.000	135.90	0.00	0.0000	0.0000	0.0000	0.00
101	SEABED	-437.43	-42.67	0.00	536.60	0.572	0.000	135.90	0.00	0.0000	0.0000	0.0000	0.00
102	SEABED	-443.48	-42.67	0.00	542.65	0.572	0.000	135.90	0.00	0.0000	0.0000	0.0000	0.00
103	SEABED	-449.53	-42.67	0.00	548.70	0.572	0.000	135.90	0.00	0.0000	0.0000	0.0000	0.00
104	SEABED	-455.58	-42.67	0.00	554.75	0.572	0.000	135.90	0.00	0.0000	0.0000	0.0000	0.00

S T A T I C P I P E C O O R D I N A T E S, F O R C E S A N D S T R A I N S

NODE NO.	PIPE SECTION	X COORD (M)	Y COORD (M)	VERT ANGLE (DEG)	PIPE LENGTH (M)	SUPPORT REACTION (KN)	SEPARA -TION (M)	AXIAL TENSION (KN)	BENDING MOMENT (KN-M)	TENSILE STRAIN (PCT)	BENDING STRAIN (PCT)	TOTAL STRAIN (PCT)	PERCNT ALLOW (PCT)
105	SEABED	-461.63	-42.67	0.00	560.80	0.572	0.000	135.90	0.00	0.0000	0.0000	0.0000	0.00
106	SEABED	-467.68	-42.67	0.00	566.85	0.572	0.000	135.90	0.00	0.0000	0.0000	0.0000	0.00
107	SEABED	-473.73	-42.67	0.00	572.90	0.572	0.000	135.90	0.00	0.0000	0.0000	0.0000	0.00
108	SEABED	-479.78	-42.67	0.00	578.95	0.572	0.000	135.90	0.00	0.0000	0.0000	0.0000	0.00
109	SEABED	-485.83	-42.67	0.00	585.00	0.572	0.000	135.90	0.00	0.0000	0.0000	0.0000	0.00
110	SEABED	-491.88	-42.67	0.00	591.05	0.572	0.000	135.90	0.00	0.0000	0.0000	0.0000	0.00
111	SEABED	-497.93	-42.67	0.00	597.10	0.572	0.000	135.90	0.00	0.0000	0.0000	0.0000	0.00
112	SEABED	-503.98	-42.67	0.00	603.15	0.572	0.000	135.90	0.00	0.0000	0.0000	0.0000	0.00
113	SEABED	-510.03	-42.67	0.00	609.20	0.572	0.000	135.90	0.00	0.0000	0.0000	0.0000	0.00
114	SEABED	-516.08	-42.67	0.00	615.25	0.572	0.000	135.90	0.00	0.0000	0.0000	0.0000	0.00
115	SEABED	-522.12	-42.67	0.00	621.30	0.572	0.000	135.90	0.00	0.0000	0.0000	0.0000	0.00
116	SEABED	-528.17	-42.67	0.00	627.35	0.572	0.000	135.90	0.00	0.0000	0.0000	0.0000	0.00
117	SEABED	-534.22	-42.67	0.00	633.40	0.572	0.000	135.90	0.00	0.0000	0.0000	0.0000	0.00
118	SEABED	-540.27	-42.67	0.00	639.45	0.572	0.000	135.90	0.00	0.0000	0.0000	0.0000	0.00
119	SEABED	-546.32	-42.67	0.00	645.50	0.572	0.000	135.90	0.00	0.0000	0.0000	0.0000	0.00
120	SEABED	-552.37	-42.67	0.00	651.55	0.572	0.000	135.90	0.00	0.0000	0.0000	0.0000	0.00
121	SEABED	-558.42	-42.67	0.00	657.60	0.572	0.000	135.90	0.00	0.0000	0.0000	0.0000	0.00
122	SEABED	-564.47	-42.67	0.00	663.65	0.572	0.000	135.90	0.00	0.0000	0.0000	0.0000	0.00
123	SEABED	-570.52	-42.67	0.00	669.70	0.572	0.000	135.90	0.00	0.0000	0.0000	0.0000	0.00
124	SEABED	-576.57	-42.67	0.00	675.75	0.572	0.000	135.90	0.00	0.0000	0.0000	0.0000	0.00
125	SEABED	-582.62	-42.67	0.00	681.80	0.572	0.000	135.90	0.00	0.0000	0.0000	0.0000	0.00
126	SEABED	-588.67	-42.67	0.00	687.85	0.572	0.000	135.90	0.00	0.0000	0.0000	0.0000	0.00
127	SEABED	-594.72	-42.67	0.00	693.90	0.572	0.000	135.90	0.00	0.0000	0.0000	0.0000	0.00
128	SEABED	-600.77	-42.67	0.00	699.95	0.572	0.000	135.90	0.00	0.0000	0.0000	0.0000	0.00
129	SEABED	-606.82	-42.67	0.00	706.00	0.572	0.000	135.90	0.00	0.0000	0.0000	0.0000	0.00
130	SEABED	-612.87	-42.67	0.00	712.05	0.572	0.000	135.90	0.00	0.0000	0.0000	0.0000	0.00
131	SEABED	-618.92	-42.67	0.00	718.10	0.571	0.000	135.90	0.00	0.0000	0.0000	0.0000	0.00
132	SEABED	-624.97	-42.67	0.00	724.15	0.569	0.000	135.90	0.00	0.0000	0.0000	0.0000	0.00
133	SEABED	-631.02	-42.67	0.00	730.20	0.430	0.000	135.90	0.00	0.0000	0.0000	0.0000	0.00
134	SEABED	-634.48	-42.67	-0.02	733.65	0.246	0.000	135.90	0.00	0.0000	0.0000	0.0000	0.00
135	SEABED	-637.93	-42.67	-0.09	737.11	0.000	0.000	135.90	0.00	0.0000	0.0000	0.0000	0.00

S T A T I C P I P E C O O R D I N A T E S, F O R C E S A N D S T R A I N S

NODE NO.	PIPE SECTION	X COORD (M)	Y COORD (M)	VERT ANGLE (DEG)	PIPE LENGTH (M)	SUPPORT REACTION (KN)	SEPARA -TION (M)	AXIAL TENSION (KN)	BENDING MOMENT (KN-M)	TENSILE STRAIN (PCT)	BENDING STRAIN (PCT)	TOTAL STRAIN (PCT)	PERCNT ALLOW (PCT)
1	LAYBARGE	96.31	6.41	1.93	0.00	9.928	0.000	0.00	2.74	0.0000	0.0021	0.0021	0.00
3	LAYBARGE	84.28	6.05	1.58	12.04	24.169	0.000	-0.73	-19.24	0.0000	-0.0144	0.0144	0.00
5	LAYBARGE	73.45	5.73	1.90	22.87	24.316	0.000	-1.39	-29.29	-0.0001	-0.0219	0.0220	0.00
7	TENSIONR	60.10	5.24	2.31	36.23	32.285	0.000	177.52	-23.68	0.0083	-0.0177	0.0260	0.00
9	LAYBARGE	51.10	4.87	2.20	45.24	0.000	0.000	176.79	30.61	0.0082	0.0229	0.0311	0.00
10	LAYBARGE	46.45	4.70	1.90	49.89	8.286	0.000	176.47	14.85	0.0082	0.0111	0.0193	0.00
12	LAYBARGE	35.36	4.31	2.68	60.99	37.802	0.000	175.42	-84.51	0.0082	-0.0632	0.0714	0.00
14	LAYBARGE	25.34	3.64	5.03	71.03	32.939	0.000	174.05	-106.83	0.0081	-0.0799	0.0880	0.00
16	LAYBARGE	19.31	3.04	6.20	77.09	0.000	0.000	173.08	-50.06	0.0081	-0.0374	0.0455	0.00
17	LAYBARGE	8.88	1.76	8.27	87.60	53.205	0.000	170.06	-136.24	0.0079	-0.1019	0.1098	0.00
19	LAYBARGE	4.89	1.14	9.30	91.63	0.000	0.000	169.25	-55.60	0.0079	-0.0416	0.0495	0.00
20	LAYBARGE	3.07	0.83	9.48	93.48	0.000	0.216	168.70	-25.72	0.0078	-0.0192	0.0271	0.00
24	STINGER	-7.59	-0.92	8.85	104.28	0.000	0.208	166.07	46.42	0.0077	0.0347	0.0424	0.00
26	STINGER	-16.63	-2.25	7.96	113.43	3.998	0.000	164.79	20.08	0.0076	0.0150	0.0227	0.00
29	STINGER	-26.35	-3.59	8.10	123.23	23.461	0.000	163.40	-47.51	0.0075	-0.0355	0.0431	0.00
31	STINGER	-37.17	-5.18	8.39	134.17	0.000	0.078	161.86	6.02	0.0074	0.0045	0.0120	0.00
33	STINGER	-40.17	-5.62	8.36	137.20	0.000	0.550	161.42	0.00	0.0074	0.0000	0.0075	0.00
35	SAGBEND	-46.27	-6.39	7.13	143.36	0.000	0.000	161.46	0.00	0.0000	0.0000	0.0000	0.00
36	SAGBEND	-52.28	-7.14	7.12	149.41	0.000	0.000	161.45	0.00	0.0000	0.0000	0.0000	0.00
37	SAGBEND	-58.28	-7.89	7.12	155.45	0.000	0.000	161.45	0.00	0.0000	0.0000	0.0000	0.00
38	SAGBEND	-64.28	-8.64	7.11	161.50	0.000	0.000	161.45	0.00	0.0000	0.0000	0.0000	0.00
39	SAGBEND	-70.29	-9.39	7.10	167.55	0.000	0.000	161.45	0.00	0.0000	0.0000	0.0000	0.00
40	SAGBEND	-76.29	-10.13	7.10	173.60	0.000	0.000	161.45	0.00	0.0000	0.0000	0.0000	0.00
41	SAGBEND	-82.29	-10.88	7.09	179.65	0.000	0.000	161.44	0.00	0.0000	0.0000	0.0000	0.00
42	SAGBEND	-88.30	-11.63	7.09	185.70	0.000	0.000	161.44	0.00	0.0000	0.0000	0.0000	0.00
43	SAGBEND	-94.30	-12.37	7.08	191.75	0.000	0.000	161.44	0.00	0.0000	0.0000	0.0000	0.00
44	SAGBEND	-100.31	-13.12	7.08	197.80	0.000	0.000	161.44	0.00	0.0000	0.0000	0.0000	0.00
45	SAGBEND	-106.31	-13.86	7.07	203.85	0.000	0.000	161.44	0.00	0.0000	0.0000	0.0000	0.00
46	SAGBEND	-112.31	-14.61	7.07	209.90	0.000	0.000	161.43	0.00	0.0000	0.0000	0.0000	0.00
47	SAGBEND	-118.32	-15.35	7.06	215.95	0.000	0.000	161.43	0.00	0.0000	0.0000	0.0000	0.00
48	SAGBEND	-124.32	-16.10	7.05	222.00	0.000	0.000	161.43	0.00	0.0000	0.0000	0.0000	0.00
49	SAGBEND	-130.33	-16.84	7.05	228.05	0.000	0.000	161.43	0.00	0.0000	0.0000	0.0000	0.00
50	SAGBEND	-136.33	-17.58	7.04	234.10	0.000	0.000	161.43	0.00	0.0000	0.0000	0.0000	0.00
51	SAGBEND	-142.33	-18.32	7.04	240.15	0.000	0.000	161.42	0.00	0.0000	0.0000	0.0000	0.00
52	SAGBEND	-148.34	-19.06	7.03	246.20	0.000	0.000	161.42	0.00	0.0000	0.0000	0.0000	0.00
53	SAGBEND	-154.34	-19.80	7.03	252.25	0.000	0.000	161.42	0.00	0.0000	0.0000	0.0000	0.00
54	SAGBEND	-160.35	-20.54	7.02	258.30	0.000	0.000	161.42	0.00	0.0000	0.0000	0.0000	0.00
55	SAGBEND	-166.35	-21.28	7.01	264.35	0.000	0.000	161.42	0.00	0.0000	0.0000	0.0000	0.00
56	SAGBEND	-172.36	-22.02	7.01	270.40	0.000	0.000	161.41	0.00	0.0000	0.0000	0.0000	0.00
57	SAGBEND	-178.36	-22.76	7.00	276.45	0.000	0.000	161.41	0.00	0.0000	0.0000	0.0000	0.00
58	SAGBEND	-184.37	-23.50	7.00	282.50	0.000	0.000	161.41	0.00	0.0000	0.0000	0.0000	0.00
59	SAGBEND	-190.37	-24.23	6.99	288.55	0.000	0.000	161.41	0.00	0.0000	0.0000	0.0000	0.00
60	SAGBEND	-196.38	-24.97	6.99	294.60	0.000	0.000	161.41	0.00	0.0000	0.0000	0.0000	0.00

S T A T I C P I P E C O O R D I N A T E S, F O R C E S A N D S T R A I N S

NODE NO.	PIPE SECTION	X COORD (M)	Y COORD (M)	VERT ANGLE (DEG)	PIPE LENGTH (M)	SUPPORT REACTION (KN)	SEPARA -TION (M)	AXIAL TENSION (KN)	BENDING MOMENT (KN-M)	TENSILE STRAIN (PCT)	BENDING STRAIN (PCT)	TOTAL STRAIN (PCT)	PERCNT ALLOW (PCT)
61	SAGBEND	-202.38	-25.70	6.98	300.65	0.000	0.000	161.40	0.00	0.0000	0.0000	0.0000	0.00
62	SAGBEND	-208.39	-26.44	6.98	306.70	0.000	0.000	161.40	0.00	0.0000	0.0000	0.0000	0.00
63	SAGBEND	-214.39	-27.17	6.97	312.75	0.000	0.000	161.40	0.00	0.0000	0.0000	0.0000	0.00
64	SAGBEND	-220.40	-27.91	6.96	318.80	0.000	0.000	161.40	0.00	0.0000	0.0000	0.0000	0.00
65	SAGBEND	-226.40	-28.64	6.96	324.85	0.000	0.000	161.40	0.00	0.0000	0.0000	0.0000	0.00
66	SAGBEND	-232.41	-29.37	6.95	330.90	0.000	0.000	161.40	0.00	0.0000	0.0000	0.0000	0.00
67	SAGBEND	-235.49	-29.75	6.95	334.01	0.000	0.000	161.39	0.00	0.0000	0.0000	0.0000	0.00
68	SAGBEND	-238.57	-30.13	6.95	337.11	0.000	0.000	161.39	0.00	0.0000	0.0000	0.0000	0.00
69	SAGBEND	-244.42	-30.83	6.75	343.00	0.000	0.000	161.33	0.00	0.0000	0.0000	0.0000	0.00
70	SAGBEND	-250.43	-31.53	6.55	349.05	0.000	0.000	161.26	0.00	0.0000	0.0000	0.0000	0.00
71	SAGBEND	-256.44	-32.21	6.35	355.10	0.000	0.000	161.20	0.00	0.0000	0.0000	0.0000	0.00
72	SAGBEND	-262.46	-32.87	6.15	361.15	0.000	0.000	161.13	0.00	0.0000	0.0000	0.0000	0.00
73	SAGBEND	-268.47	-33.50	5.94	367.20	0.000	0.000	161.07	0.00	0.0000	0.0000	0.0000	0.00
74	SAGBEND	-274.49	-34.12	5.74	373.25	0.000	0.000	161.02	0.00	0.0000	0.0000	0.0000	0.00
75	SAGBEND	-280.51	-34.71	5.54	379.30	0.000	0.000	160.96	0.00	0.0000	0.0000	0.0000	0.00
76	SAGBEND	-286.53	-35.29	5.34	385.35	0.000	0.000	160.91	0.00	0.0000	0.0000	0.0000	0.00
77	SAGBEND	-292.56	-35.84	5.13	391.40	0.000	0.000	160.85	0.00	0.0000	0.0000	0.0000	0.00
78	SAGBEND	-298.58	-36.37	4.93	397.45	0.000	0.000	160.80	0.00	0.0000	0.0000	0.0000	0.00
79	SAGBEND	-304.61	-36.88	4.73	403.50	0.000	0.000	160.76	0.00	0.0000	0.0000	0.0000	0.00
80	SAGBEND	-310.64	-37.37	4.53	409.55	0.000	0.000	160.71	0.00	0.0000	0.0000	0.0000	0.00
81	SAGBEND	-316.68	-37.84	4.32	415.60	0.000	0.000	160.66	0.00	0.0000	0.0000	0.0000	0.00
82	SAGBEND	-322.71	-38.28	4.12	421.65	0.000	0.000	160.62	0.00	0.0000	0.0000	0.0000	0.00
83	SAGBEND	-328.74	-38.70	3.92	427.70	0.000	0.000	160.58	0.00	0.0000	0.0000	0.0000	0.00
84	SAGBEND	-334.78	-39.11	3.71	433.75	0.000	0.000	160.54	0.00	0.0000	0.0000	0.0000	0.00
85	SAGBEND	-340.82	-39.49	3.51	439.80	0.000	0.000	160.51	0.00	0.0000	0.0000	0.0000	0.00
86	SAGBEND	-346.86	-39.85	3.30	445.85	0.000	0.000	160.47	0.00	0.0000	0.0000	0.0000	0.00
87	SAGBEND	-352.90	-40.19	3.10	451.90	0.000	0.000	160.44	0.00	0.0000	0.0000	0.0000	0.00
88	SAGBEND	-358.94	-40.50	2.90	457.95	0.000	0.000	160.41	0.00	0.0000	0.0000	0.0000	0.00
89	SAGBEND	-364.98	-40.80	2.69	464.00	0.000	0.000	160.39	0.00	0.0000	0.0000	0.0000	0.00
90	SAGBEND	-371.03	-41.07	2.49	470.05	0.000	0.000	160.36	0.00	0.0000	0.0000	0.0000	0.00
91	SAGBEND	-377.07	-41.32	2.29	476.10	0.000	0.000	160.34	0.00	0.0000	0.0000	0.0000	0.00
92	SAGBEND	-383.12	-41.55	2.08	482.15	0.000	0.000	160.31	0.00	0.0000	0.0000	0.0000	0.00
93	SAGBEND	-389.16	-41.76	1.88	488.20	0.000	0.000	160.29	0.00	0.0000	0.0000	0.0000	0.00
94	SAGBEND	-395.21	-41.95	1.67	494.25	0.000	0.000	160.28	0.00	0.0000	0.0000	0.0000	0.00
95	SAGBEND	-401.26	-42.11	1.47	500.30	0.000	0.000	160.26	0.00	0.0000	0.0000	0.0000	0.00
96	SAGBEND	-407.31	-42.26	1.26	506.35	0.000	0.000	160.25	0.00	0.0000	0.0000	0.0000	0.00
97	SAGBEND	-413.35	-42.38	1.06	512.40	0.000	0.000	160.24	0.00	0.0000	0.0000	0.0000	0.00
98	SAGBEND	-419.40	-42.48	0.86	518.45	0.000	0.000	160.23	0.00	0.0000	0.0000	0.0000	0.00
99	SAGBEND	-425.45	-42.56	0.65	524.50	0.000	0.000	160.22	0.00	0.0000	0.0000	0.0000	0.00
100	SAGBEND	-431.50	-42.62	0.45	530.55	0.000	0.000	160.21	0.00	0.0000	0.0000	0.0000	0.00
101	SAGBEND	-437.55	-42.66	0.24	536.60	0.001	0.000	160.21	0.00	0.0000	0.0000	0.0000	0.00
102	SEABED	-443.60	-42.67	0.04	542.65	0.224	0.000	160.21	0.00	0.0000	0.0000	0.0000	0.00

103	SEABED	-449.65	-42.67	0.00	548.70	0.531	0.000	160.21	0.00	0.0000	0.0000	0.0000	0.00
104	SEABED	-455.70	-42.67	0.00	554.75	0.568	0.000	160.21	0.00	0.0000	0.0000	0.0000	0.00

S T A T I C P I P E C O O R D I N A T E S, F O R C E S A N D S T R A I N S

NODE NO.	PIPE SECTION	X COORD (M)	Y COORD (M)	VERT ANGLE (DEG)	PIPE LENGTH (M)	SUPPORT REACTION (KN)	SEPARA -TION (M)	AXIAL TENSION (KN)	BENDING MOMENT (KN-M)	TENSILE STRAIN (PCT)	BENDING STRAIN (PCT)	TOTAL STRAIN (PCT)	PERCNT ALLOW (PCT)
105	SEABED	-461.75	-42.67	0.00	560.80	0.571	0.000	160.21	0.00	0.0000	0.0000	0.0000	0.00
106	SEABED	-467.80	-42.67	0.00	566.85	0.572	0.000	160.21	0.00	0.0000	0.0000	0.0000	0.00
107	SEABED	-473.85	-42.67	0.00	572.90	0.572	0.000	160.21	0.00	0.0000	0.0000	0.0000	0.00
108	SEABED	-479.90	-42.67	0.00	578.95	0.572	0.000	160.21	0.00	0.0000	0.0000	0.0000	0.00
109	SEABED	-485.95	-42.67	0.00	585.00	0.572	0.000	160.21	0.00	0.0000	0.0000	0.0000	0.00
110	SEABED	-492.00	-42.67	0.00	591.05	0.572	0.000	160.21	0.00	0.0000	0.0000	0.0000	0.00
111	SEABED	-498.05	-42.67	0.00	597.10	0.572	0.000	160.21	0.00	0.0000	0.0000	0.0000	0.00
112	SEABED	-504.10	-42.67	0.00	603.15	0.572	0.000	160.21	0.00	0.0000	0.0000	0.0000	0.00
113	SEABED	-510.15	-42.67	0.00	609.20	0.572	0.000	160.21	0.00	0.0000	0.0000	0.0000	0.00
114	SEABED	-516.20	-42.67	0.00	615.25	0.572	0.000	160.21	0.00	0.0000	0.0000	0.0000	0.00
115	SEABED	-522.25	-42.67	0.00	621.30	0.572	0.000	160.21	0.00	0.0000	0.0000	0.0000	0.00
116	SEABED	-528.30	-42.67	0.00	627.35	0.572	0.000	160.21	0.00	0.0000	0.0000	0.0000	0.00
117	SEABED	-534.35	-42.67	0.00	633.40	0.572	0.000	160.21	0.00	0.0000	0.0000	0.0000	0.00
118	SEABED	-540.40	-42.67	0.00	639.45	0.572	0.000	160.21	0.00	0.0000	0.0000	0.0000	0.00
119	SEABED	-546.45	-42.67	0.00	645.50	0.572	0.000	160.21	0.00	0.0000	0.0000	0.0000	0.00
120	SEABED	-552.50	-42.67	0.00	651.55	0.572	0.000	160.21	0.00	0.0000	0.0000	0.0000	0.00
121	SEABED	-558.55	-42.67	0.00	657.60	0.572	0.000	160.21	0.00	0.0000	0.0000	0.0000	0.00
122	SEABED	-564.60	-42.67	0.00	663.65	0.572	0.000	160.21	0.00	0.0000	0.0000	0.0000	0.00
123	SEABED	-570.65	-42.67	0.00	669.70	0.572	0.000	160.21	0.00	0.0000	0.0000	0.0000	0.00
124	SEABED	-576.70	-42.67	0.00	675.75	0.572	0.000	160.21	0.00	0.0000	0.0000	0.0000	0.00
125	SEABED	-582.75	-42.67	0.00	681.80	0.572	0.000	160.21	0.00	0.0000	0.0000	0.0000	0.00
126	SEABED	-588.80	-42.67	0.00	687.85	0.572	0.000	160.21	0.00	0.0000	0.0000	0.0000	0.00
127	SEABED	-594.85	-42.67	0.00	693.90	0.572	0.000	160.21	0.00	0.0000	0.0000	0.0000	0.00
128	SEABED	-600.90	-42.67	0.00	699.95	0.572	0.000	160.21	0.00	0.0000	0.0000	0.0000	0.00
129	SEABED	-606.95	-42.67	0.00	706.00	0.572	0.000	160.21	0.00	0.0000	0.0000	0.0000	0.00
130	SEABED	-613.00	-42.67	0.00	712.05	0.572	0.000	160.21	0.00	0.0000	0.0000	0.0000	0.00
131	SEABED	-619.05	-42.67	0.00	718.10	0.571	0.000	160.21	0.00	0.0000	0.0000	0.0000	0.00
132	SEABED	-625.10	-42.67	0.00	724.15	0.568	0.000	160.21	0.00	0.0000	0.0000	0.0000	0.00
133	SEABED	-631.15	-42.67	0.00	730.20	0.425	0.000	160.21	0.00	0.0000	0.0000	0.0000	0.00
134	SEABED	-634.60	-42.67	-0.02	733.65	0.237	0.000	160.21	0.00	0.0000	0.0000	0.0000	0.00
135	SEABED	-638.06	-42.67	-0.08	737.11	0.000	0.000	160.21	0.00	0.0000	0.0000	0.0000	0.00

S T A T I C P I P E C O O R D I N A T E S, F O R C E S A N D S T R A I N S

NODE NO.	PIPE SECTION	X COORD (M)	Y COORD (M)	VERT ANGLE (DEG)	PIPE LENGTH (M)	SUPPORT REACTION (KN)	SEPARA -TION (M)	AXIAL TENSION (KN)	BENDING MOMENT (KN-M)	TENSILE STRAIN (PCT)	BENDING STRAIN (PCT)	TOTAL STRAIN (PCT)	PERCNT ALLOW (PCT)
1	LAYBARGE	96.31	6.41	1.93	0.00	9.928	0.000	0.00	2.74	0.0000	0.0021	0.0021	0.00
3	LAYBARGE	84.28	6.05	1.58	12.04	24.172	0.000	-0.73	-19.24	0.0000	-0.0144	0.0144	0.00
5	LAYBARGE	73.45	5.73	1.90	22.87	24.307	0.000	-1.39	-29.27	-0.0001	-0.0219	0.0220	0.00
7	TENSIONR	60.10	5.24	2.31	36.23	32.318	0.000	177.51	-23.73	0.0083	-0.0178	0.0260	0.00
9	LAYBARGE	51.10	4.87	2.20	45.24	0.000	0.000	176.78	30.77	0.0082	0.0230	0.0312	0.00
10	LAYBARGE	46.45	4.70	1.90	49.89	8.111	0.000	176.47	15.11	0.0082	0.0113	0.0195	0.00
12	LAYBARGE	35.36	4.31	2.69	60.99	38.627	0.000	175.41	-85.22	0.0082	-0.0637	0.0719	0.00
14	LAYBARGE	25.34	3.64	4.99	71.03	30.777	0.000	174.07	-101.95	0.0081	-0.0763	0.0843	0.00
16	LAYBARGE	19.31	3.05	6.14	77.09	0.000	0.000	173.09	-52.46	0.0081	-0.0392	0.0473	0.00
17	LAYBARGE	8.88	1.76	8.47	87.60	56.797	0.000	169.92	-154.35	0.0079	-0.1156	0.1235	0.00
19	LAYBARGE	4.90	1.11	9.67	91.63	0.000	0.000	169.17	-69.73	0.0079	-0.0522	0.0600	0.00
20	LAYBARGE	3.08	0.80	9.93	93.48	0.000	0.182	168.61	-38.19	0.0078	-0.0286	0.0364	0.00
24	STINGER	-7.63	-1.07	9.52	104.35	0.000	0.162	165.93	41.43	0.0077	0.0310	0.0387	0.00
26	STINGER	-16.66	-2.51	8.69	113.49	3.763	0.000	164.52	19.50	0.0076	0.0146	0.0222	0.00
29	STINGER	-26.33	-3.98	8.82	123.27	23.631	0.000	163.02	-45.85	0.0075	-0.0343	0.0419	0.00
31	STINGER	-37.12	-5.69	8.98	134.20	0.000	0.041	161.35	14.07	0.0073	0.0105	0.0180	0.00
33	STINGER	-40.08	-6.16	8.88	137.20	0.000	0.508	160.88	10.92	0.0073	0.0082	0.0156	0.00
35	SAGBEND	-42.96	-6.61	8.84	140.11	0.000	0.000	160.44	0.00	0.0073	0.0000	0.0075	0.00
36	SAGBEND	-46.18	-7.00	7.00	143.36	0.000	0.000	160.52	0.00	0.0000	0.0000	0.0000	0.00
37	SAGBEND	-52.18	-7.74	6.99	149.40	0.000	0.000	160.52	0.00	0.0000	0.0000	0.0000	0.00
38	SAGBEND	-58.19	-8.48	6.99	155.45	0.000	0.000	160.52	0.00	0.0000	0.0000	0.0000	0.00
39	SAGBEND	-64.19	-9.21	6.98	161.50	0.000	0.000	160.51	0.00	0.0000	0.0000	0.0000	0.00
40	SAGBEND	-70.20	-9.95	6.98	167.55	0.000	0.000	160.51	0.00	0.0000	0.0000	0.0000	0.00
41	SAGBEND	-76.20	-10.68	6.97	173.60	0.000	0.000	160.51	0.00	0.0000	0.0000	0.0000	0.00
42	SAGBEND	-82.21	-11.42	6.96	179.65	0.000	0.000	160.51	0.00	0.0000	0.0000	0.0000	0.00
43	SAGBEND	-88.21	-12.15	6.96	185.70	0.000	0.000	160.51	0.00	0.0000	0.0000	0.0000	0.00
44	SAGBEND	-94.22	-12.88	6.95	191.75	0.000	0.000	160.50	0.00	0.0000	0.0000	0.0000	0.00
45	SAGBEND	-100.23	-13.61	6.95	197.80	0.000	0.000	160.50	0.00	0.0000	0.0000	0.0000	0.00
46	SAGBEND	-106.23	-14.34	6.94	203.85	0.000	0.000	160.50	0.00	0.0000	0.0000	0.0000	0.00
47	SAGBEND	-112.24	-15.08	6.94	209.90	0.000	0.000	160.50	0.00	0.0000	0.0000	0.0000	0.00
48	SAGBEND	-118.24	-15.81	6.93	215.95	0.000	0.000	160.50	0.00	0.0000	0.0000	0.0000	0.00
49	SAGBEND	-124.25	-16.54	6.93	222.00	0.000	0.000	160.49	0.00	0.0000	0.0000	0.0000	0.00
50	SAGBEND	-130.25	-17.27	6.92	228.05	0.000	0.000	160.49	0.00	0.0000	0.0000	0.0000	0.00
51	SAGBEND	-136.26	-17.99	6.91	234.10	0.000	0.000	160.49	0.00	0.0000	0.0000	0.0000	0.00
52	SAGBEND	-142.27	-18.72	6.91	240.15	0.000	0.000	160.49	0.00	0.0000	0.0000	0.0000	0.00
53	SAGBEND	-148.27	-19.45	6.90	246.20	0.000	0.000	160.49	0.00	0.0000	0.0000	0.0000	0.00
54	SAGBEND	-154.28	-20.18	6.90	252.25	0.000	0.000	160.48	0.00	0.0000	0.0000	0.0000	0.00
55	SAGBEND	-160.28	-20.90	6.89	258.30	0.000	0.000	160.48	0.00	0.0000	0.0000	0.0000	0.00
56	SAGBEND	-166.29	-21.63	6.89	264.35	0.000	0.000	160.48	0.00	0.0000	0.0000	0.0000	0.00
57	SAGBEND	-172.30	-22.35	6.88	270.40	0.000	0.000	160.48	0.00	0.0000	0.0000	0.0000	0.00
58	SAGBEND	-178.30	-23.08	6.88	276.45	0.000	0.000	160.48	0.00	0.0000	0.0000	0.0000	0.00
59	SAGBEND	-184.31	-23.80	6.87	282.50	0.000	0.000	160.48	0.00	0.0000	0.0000	0.0000	0.00
60	SAGBEND	-190.32	-24.53	6.86	288.55	0.000	0.000	160.47	0.00	0.0000	0.0000	0.0000	0.00

S T A T I C P I P E C O O R D I N A T E S, F O R C E S A N D S T R A I N S

NODE NO.	PIPE SECTION	X COORD (M)	Y COORD (M)	VERT ANGLE (DEG)	PIPE LENGTH (M)	SUPPORT REACTION (KN)	SEPARA -TION (M)	AXIAL TENSION (KN)	BENDING MOMENT (KN-M)	TENSILE STRAIN (PCT)	BENDING STRAIN (PCT)	TOTAL STRAIN (PCT)	PERCNT ALLOW (PCT)
61	SAGBEND	-196.32	-25.25	6.86	294.60	0.000	0.000	160.47	0.00	0.0000	0.0000	0.0000	0.00
62	SAGBEND	-202.33	-25.97	6.85	300.65	0.000	0.000	160.47	0.00	0.0000	0.0000	0.0000	0.00
63	SAGBEND	-208.34	-26.69	6.85	306.70	0.000	0.000	160.47	0.00	0.0000	0.0000	0.0000	0.00
64	SAGBEND	-214.34	-27.41	6.84	312.75	0.000	0.000	160.47	0.00	0.0000	0.0000	0.0000	0.00
65	SAGBEND	-220.35	-28.13	6.84	318.80	0.000	0.000	160.46	0.00	0.0000	0.0000	0.0000	0.00
66	SAGBEND	-226.36	-28.85	6.83	324.85	0.000	0.000	160.46	0.00	0.0000	0.0000	0.0000	0.00
67	SAGBEND	-232.36	-29.57	6.82	330.90	0.000	0.000	160.46	0.00	0.0000	0.0000	0.0000	0.00
68	SAGBEND	-238.37	-30.29	6.82	336.95	0.000	0.000	160.46	0.00	0.0000	0.0000	0.0000	0.00
69	SAGBEND	-241.51	-30.67	6.82	340.11	0.000	0.000	160.46	0.00	0.0000	0.0000	0.0000	0.00
70	SAGBEND	-245.95	-31.19	6.67	344.58	0.000	0.000	160.41	0.00	0.0000	0.0000	0.0000	0.00
71	SAGBEND	-250.39	-31.70	6.52	349.05	0.000	0.000	160.36	0.00	0.0000	0.0000	0.0000	0.00
72	SAGBEND	-256.40	-32.38	6.31	355.10	0.000	0.000	160.30	0.00	0.0000	0.0000	0.0000	0.00
73	SAGBEND	-262.41	-33.03	6.11	361.15	0.000	0.000	160.23	0.00	0.0000	0.0000	0.0000	0.00
74	SAGBEND	-268.43	-33.67	5.91	367.20	0.000	0.000	160.17	0.00	0.0000	0.0000	0.0000	0.00
75	SAGBEND	-274.45	-34.28	5.70	373.25	0.000	0.000	160.12	0.00	0.0000	0.0000	0.0000	0.00
76	SAGBEND	-280.47	-34.87	5.50	379.30	0.000	0.000	160.06	0.00	0.0000	0.0000	0.0000	0.00
77	SAGBEND	-286.49	-35.44	5.30	385.35	0.000	0.000	160.01	0.00	0.0000	0.0000	0.0000	0.00
78	SAGBEND	-292.52	-35.99	5.09	391.40	0.000	0.000	159.95	0.00	0.0000	0.0000	0.0000	0.00
79	SAGBEND	-298.55	-36.51	4.89	397.45	0.000	0.000	159.90	0.00	0.0000	0.0000	0.0000	0.00
80	SAGBEND	-304.58	-37.02	4.68	403.50	0.000	0.000	159.86	0.00	0.0000	0.0000	0.0000	0.00
81	SAGBEND	-310.61	-37.50	4.48	409.55	0.000	0.000	159.81	0.00	0.0000	0.0000	0.0000	0.00
82	SAGBEND	-316.64	-37.96	4.28	415.60	0.000	0.000	159.77	0.00	0.0000	0.0000	0.0000	0.00
83	SAGBEND	-322.67	-38.40	4.07	421.65	0.000	0.000	159.73	0.00	0.0000	0.0000	0.0000	0.00
84	SAGBEND	-328.71	-38.82	3.87	427.70	0.000	0.000	159.69	0.00	0.0000	0.0000	0.0000	0.00
85	SAGBEND	-334.74	-39.22	3.66	433.75	0.000	0.000	159.65	0.00	0.0000	0.0000	0.0000	0.00
86	SAGBEND	-340.78	-39.60	3.46	439.80	0.000	0.000	159.61	0.00	0.0000	0.0000	0.0000	0.00
87	SAGBEND	-346.82	-39.95	3.25	445.85	0.000	0.000	159.58	0.00	0.0000	0.0000	0.0000	0.00
88	SAGBEND	-352.86	-40.28	3.05	451.90	0.000	0.000	159.55	0.00	0.0000	0.0000	0.0000	0.00
89	SAGBEND	-358.90	-40.59	2.84	457.95	0.000	0.000	159.52	0.00	0.0000	0.0000	0.0000	0.00
90	SAGBEND	-364.95	-40.88	2.64	464.00	0.000	0.000	159.49	0.00	0.0000	0.0000	0.0000	0.00
91	SAGBEND	-370.99	-41.15	2.43	470.05	0.000	0.000	159.47	0.00	0.0000	0.0000	0.0000	0.00
92	SAGBEND	-377.04	-41.40	2.23	476.10	0.000	0.000	159.44	0.00	0.0000	0.0000	0.0000	0.00
93	SAGBEND	-383.08	-41.62	2.02	482.15	0.000	0.000	159.42	0.00	0.0000	0.0000	0.0000	0.00
94	SAGBEND	-389.13	-41.82	1.82	488.20	0.000	0.000	159.40	0.00	0.0000	0.0000	0.0000	0.00
95	SAGBEND	-395.18	-42.00	1.61	494.25	0.000	0.000	159.39	0.00	0.0000	0.0000	0.0000	0.00
96	SAGBEND	-401.22	-42.16	1.41	500.30	0.000	0.000	159.37	0.00	0.0000	0.0000	0.0000	0.00
97	SAGBEND	-407.27	-42.30	1.20	506.35	0.000	0.000	159.36	0.00	0.0000	0.0000	0.0000	0.00
98	SAGBEND	-413.32	-42.42	1.00	512.40	0.000	0.000	159.35	0.00	0.0000	0.0000	0.0000	0.00
99	SAGBEND	-419.37	-42.51	0.79	518.45	0.000	0.000	159.34	0.00	0.0000	0.0000	0.0000	0.00
100	SAGBEND	-425.42	-42.58	0.58	524.50	0.000	0.000	159.33	0.00	0.0000	0.0000	0.0000	0.00
101	SAGBEND	-431.47	-42.63	0.38	530.55	0.000	0.000	159.33	0.00	0.0000	0.0000	0.0000	0.00
102	SAGBEND	-437.52	-42.66	0.18	536.60	0.020	0.000	159.32	-0.01	0.0000	0.0000	0.0000	0.00
103	SEABED	-443.57	-42.67	0.02	542.65	0.374	0.000	159.32	0.00	0.0000	0.0000	0.0000	0.00
104	SEABED	-449.62	-42.67	0.00	548.70	0.554	0.000	159.32	0.00	0.0000	0.0000	0.0000	0.00

S T A T I C P I P E C O O R D I N A T E S, F O R C E S A N D S T R A I N S

NODE NO.	PIPE SECTION	X COORD (M)	Y COORD (M)	VERT ANGLE (DEG)	PIPE LENGTH (M)	SUPPORT REACTION (KN)	SEPARA -TION (M)	AXIAL TENSION (KN)	BENDING MOMENT (KN-M)	TENSILE STRAIN (PCT)	BENDING STRAIN (PCT)	TOTAL STRAIN (PCT)	PERCNT ALLOW (PCT)
105	SEABED	-455.67	-42.67	0.00	554.75	0.570	0.000	159.32	0.00	0.0000	0.0000	0.0000	0.00
106	SEABED	-461.72	-42.67	0.00	560.80	0.571	0.000	159.32	0.00	0.0000	0.0000	0.0000	0.00
107	SEABED	-467.77	-42.67	0.00	566.85	0.572	0.000	159.32	0.00	0.0000	0.0000	0.0000	0.00
108	SEABED	-473.82	-42.67	0.00	572.90	0.572	0.000	159.32	0.00	0.0000	0.0000	0.0000	0.00
109	SEABED	-479.87	-42.67	0.00	578.95	0.572	0.000	159.32	0.00	0.0000	0.0000	0.0000	0.00
110	SEABED	-485.92	-42.67	0.00	585.00	0.572	0.000	159.32	0.00	0.0000	0.0000	0.0000	0.00
111	SEABED	-491.97	-42.67	0.00	591.05	0.572	0.000	159.32	0.00	0.0000	0.0000	0.0000	0.00
112	SEABED	-498.02	-42.67	0.00	597.10	0.572	0.000	159.32	0.00	0.0000	0.0000	0.0000	0.00
113	SEABED	-504.07	-42.67	0.00	603.15	0.572	0.000	159.32	0.00	0.0000	0.0000	0.0000	0.00
114	SEABED	-510.12	-42.67	0.00	609.20	0.572	0.000	159.32	0.00	0.0000	0.0000	0.0000	0.00
115	SEABED	-516.17	-42.67	0.00	615.25	0.572	0.000	159.32	0.00	0.0000	0.0000	0.0000	0.00
116	SEABED	-522.22	-42.67	0.00	621.30	0.572	0.000	159.32	0.00	0.0000	0.0000	0.0000	0.00
117	SEABED	-528.27	-42.67	0.00	627.35	0.572	0.000	159.32	0.00	0.0000	0.0000	0.0000	0.00
118	SEABED	-534.32	-42.67	0.00	633.40	0.572	0.000	159.32	0.00	0.0000	0.0000	0.0000	0.00
119	SEABED	-540.37	-42.67	0.00	639.45	0.572	0.000	159.32	0.00	0.0000	0.0000	0.0000	0.00
120	SEABED	-546.42	-42.67	0.00	645.50	0.572	0.000	159.32	0.00	0.0000	0.0000	0.0000	0.00
121	SEABED	-552.47	-42.67	0.00	651.55	0.572	0.000	159.32	0.00	0.0000	0.0000	0.0000	0.00
122	SEABED	-558.52	-42.67	0.00	657.60	0.572	0.000	159.32	0.00	0.0000	0.0000	0.0000	0.00
123	SEABED	-564.57	-42.67	0.00	663.65	0.572	0.000	159.32	0.00	0.0000	0.0000	0.0000	0.00
124	SEABED	-570.62	-42.67	0.00	669.70	0.572	0.000	159.32	0.00	0.0000	0.0000	0.0000	0.00
125	SEABED	-576.67	-42.67	0.00	675.75	0.572	0.000	159.32	0.00	0.0000	0.0000	0.0000	0.00
126	SEABED	-582.72	-42.67	0.00	681.80	0.572	0.000	159.32	0.00	0.0000	0.0000	0.0000	0.00
127	SEABED	-588.77	-42.67	0.00	687.85	0.572	0.000	159.32	0.00	0.0000	0.0000	0.0000	0.00
128	SEABED	-594.82	-42.67	0.00	693.90	0.572	0.000	159.32	0.00	0.0000	0.0000	0.0000	0.00
129	SEABED	-600.87	-42.67	0.00	699.95	0.572	0.000	159.32	0.00	0.0000	0.0000	0.0000	0.00
130	SEABED	-606.92	-42.67	0.00	706.00	0.572	0.000	159.32	0.00	0.0000	0.0000	0.0000	0.00
131	SEABED	-612.97	-42.67	0.00	712.05	0.572	0.000	159.32	0.00	0.0000	0.0000	0.0000	0.00
132	SEABED	-619.02	-42.67	0.00	718.10	0.571	0.000	159.32	0.00	0.0000	0.0000	0.0000	0.00
133	SEABED	-625.07	-42.67	0.00	724.15	0.570	0.000	159.32	0.00	0.0000	0.0000	0.0000	0.00
134	SEABED	-631.12	-42.67	0.00	730.20	0.558	0.000	159.32	0.00	0.0000	0.0000	0.0000	0.00
135	SEABED	-637.17	-42.67	-0.02	736.25	0.374	0.000	159.32	0.00	0.0000	0.0000	0.0000	0.00
136	SEABED	-641.02	-42.67	-0.08	740.11	0.000	0.000	159.32	0.00	0.0000	0.0000	0.0000	0.00

S T A T I C P I P E C O O R D I N A T E S, F O R C E S A N D S T R A I N S

NODE NO.	PIPE SECTION	X COORD (M)	Y COORD (M)	VERT ANGLE (DEG)	PIPE LENGTH (M)	SUPPORT REACTION (KN)	SEPARA -TION (M)	AXIAL TENSION (KN)	BENDING MOMENT (KN-M)	TENSILE STRAIN (PCT)	BENDING STRAIN (PCT)	TOTAL STRAIN (PCT)	PERCNT ALLOW (PCT)
1	LAYBARGE	96.31	6.41	1.93	0.00	9.929	0.000	0.00	2.74	0.0000	0.0021	0.0021	0.00
3	LAYBARGE	84.28	6.05	1.58	12.04	24.162	0.000	-0.73	-19.23	0.0000	-0.0144	0.0144	0.00
5	LAYBARGE	73.45	5.73	1.90	22.87	24.339	0.000	-1.39	-29.33	-0.0001	-0.0219	0.0220	0.00
7	TENSIONR	60.10	5.24	2.31	36.23	32.262	0.000	210.12	-23.53	0.0098	-0.0176	0.0274	0.00
9	LAYBARGE	51.10	4.87	2.20	45.24	0.000	0.000	209.39	30.24	0.0097	0.0226	0.0324	0.00
10	LAYBARGE	46.45	4.70	1.91	49.89	8.016	0.000	209.07	15.03	0.0097	0.0112	0.0210	0.00
12	LAYBARGE	35.36	4.31	2.68	60.99	38.916	0.000	208.01	-84.59	0.0097	-0.0633	0.0729	0.00
14	LAYBARGE	25.34	3.64	5.03	71.03	34.376	0.000	206.64	-107.78	0.0096	-0.0806	0.0902	0.00
16	LAYBARGE	19.31	3.04	6.20	77.09	0.000	0.000	205.68	-49.42	0.0096	-0.0370	0.0465	0.00
17	LAYBARGE	8.88	1.76	8.28	87.60	55.101	0.000	202.63	-139.25	0.0094	-0.1042	0.1136	0.00
19	LAYBARGE	4.89	1.13	9.33	91.63	0.000	0.000	201.84	-57.73	0.0094	-0.0432	0.0526	0.00
20	LAYBARGE	3.07	0.83	9.53	93.48	0.000	0.213	201.29	-27.90	0.0094	-0.0209	0.0302	0.00
24	STINGER	-7.59	-0.94	8.98	104.29	0.000	0.206	198.66	43.26	0.0092	0.0324	0.0416	0.00
26	STINGER	-16.63	-2.29	8.14	113.43	3.931	0.000	197.34	19.15	0.0091	0.0143	0.0235	0.00
29	STINGER	-26.32	-3.66	8.25	123.22	23.519	0.000	195.94	-44.46	0.0090	-0.0333	0.0424	0.00
31	STINGER	-37.14	-5.27	8.39	134.16	0.000	0.095	194.37	14.32	0.0089	0.0107	0.0197	0.00
33	STINGER	-40.14	-5.71	8.29	137.19	0.000	0.578	193.93	11.02	0.0089	0.0082	0.0173	0.00
35	SAGBEND	-43.04	-6.13	8.24	140.11	0.000	0.000	193.51	0.00	0.0088	0.0000	0.0090	0.00
36	SAGBEND	-46.26	-6.51	6.71	143.35	0.000	0.000	193.58	0.00	0.0000	0.0000	0.0000	0.00
37	SAGBEND	-52.26	-7.22	6.71	149.40	0.000	0.000	193.58	0.00	0.0000	0.0000	0.0000	0.00
38	SAGBEND	-58.27	-7.92	6.70	155.45	0.000	0.000	193.58	0.00	0.0000	0.0000	0.0000	0.00
39	SAGBEND	-64.28	-8.63	6.70	161.50	0.000	0.000	193.58	0.00	0.0000	0.0000	0.0000	0.00
40	SAGBEND	-70.29	-9.34	6.69	167.55	0.000	0.000	193.57	0.00	0.0000	0.0000	0.0000	0.00
41	SAGBEND	-76.30	-10.04	6.69	173.60	0.000	0.000	193.57	0.00	0.0000	0.0000	0.0000	0.00
42	SAGBEND	-82.31	-10.75	6.68	179.65	0.000	0.000	193.57	0.00	0.0000	0.0000	0.0000	0.00
43	SAGBEND	-88.32	-11.45	6.68	185.70	0.000	0.000	193.57	0.00	0.0000	0.0000	0.0000	0.00
44	SAGBEND	-94.32	-12.15	6.68	191.75	0.000	0.000	193.57	0.00	0.0000	0.0000	0.0000	0.00
45	SAGBEND	-100.33	-12.86	6.67	197.80	0.000	0.000	193.57	0.00	0.0000	0.0000	0.0000	0.00
46	SAGBEND	-106.34	-13.56	6.67	203.85	0.000	0.000	193.56	0.00	0.0000	0.0000	0.0000	0.00
47	SAGBEND	-112.35	-14.26	6.66	209.90	0.000	0.000	193.56	0.00	0.0000	0.0000	0.0000	0.00
48	SAGBEND	-118.36	-14.96	6.66	215.95	0.000	0.000	193.56	0.00	0.0000	0.0000	0.0000	0.00
49	SAGBEND	-124.37	-15.66	6.65	222.00	0.000	0.000	193.56	0.00	0.0000	0.0000	0.0000	0.00
50	SAGBEND	-130.38	-16.36	6.65	228.05	0.000	0.000	193.56	0.00	0.0000	0.0000	0.0000	0.00
51	SAGBEND	-136.39	-17.06	6.64	234.10	0.000	0.000	193.55	0.00	0.0000	0.0000	0.0000	0.00
52	SAGBEND	-142.40	-17.76	6.64	240.15	0.000	0.000	193.55	0.00	0.0000	0.0000	0.0000	0.00
53	SAGBEND	-148.41	-18.46	6.63	246.20	0.000	0.000	193.55	0.00	0.0000	0.0000	0.0000	0.00
54	SAGBEND	-154.42	-19.16	6.63	252.25	0.000	0.000	193.55	0.00	0.0000	0.0000	0.0000	0.00
55	SAGBEND	-160.43	-19.86	6.62	258.30	0.000	0.000	193.55	0.00	0.0000	0.0000	0.0000	0.00
56	SAGBEND	-166.44	-20.56	6.62	264.35	0.000	0.000	193.55	0.00	0.0000	0.0000	0.0000	0.00
57	SAGBEND	-172.45	-21.25	6.61	270.40	0.000	0.000	193.54	0.00	0.0000	0.0000	0.0000	0.00
58	SAGBEND	-178.46	-21.95	6.61	276.45	0.000	0.000	193.54	0.00	0.0000	0.0000	0.0000	0.00
59	SAGBEND	-184.47	-22.65	6.61	282.50	0.000	0.000	193.54	0.00	0.0000	0.0000	0.0000	0.00
60	SAGBEND	-190.48	-23.34	6.60	288.55	0.000	0.000	193.54	0.00	0.0000	0.0000	0.0000	0.00

S T A T I C P I P E C O O R D I N A T E S, F O R C E S A N D S T R A I N S

NODE NO.	PIPE SECTION	X COORD (M)	Y COORD (M)	VERT ANGLE (DEG)	PIPE LENGTH (M)	SUPPORT REACTION (KN)	SEPARA -TION (M)	AXIAL TENSION (KN)	BENDING MOMENT (KN-M)	TENSILE STRAIN (PCT)	BENDING STRAIN (PCT)	TOTAL STRAIN (PCT)	PERCNT ALLOW (PCT)
61	SAGBEND	-196.49	-24.04	6.60	294.60	0.000	0.000	193.54	0.00	0.0000	0.0000	0.0000	0.00
62	SAGBEND	-202.50	-24.73	6.59	300.65	0.000	0.000	193.53	0.00	0.0000	0.0000	0.0000	0.00
63	SAGBEND	-208.51	-25.43	6.59	306.70	0.000	0.000	193.53	0.00	0.0000	0.0000	0.0000	0.00
64	SAGBEND	-214.52	-26.12	6.58	312.75	0.000	0.000	193.53	0.00	0.0000	0.0000	0.0000	0.00
65	SAGBEND	-220.53	-26.81	6.58	318.80	0.000	0.000	193.53	0.00	0.0000	0.0000	0.0000	0.00
66	SAGBEND	-226.54	-27.51	6.57	324.85	0.000	0.000	193.53	0.00	0.0000	0.0000	0.0000	0.00
67	SAGBEND	-232.55	-28.20	6.57	330.90	0.000	0.000	193.53	0.00	0.0000	0.0000	0.0000	0.00
68	SAGBEND	-238.56	-28.89	6.56	336.95	0.000	0.000	193.52	0.00	0.0000	0.0000	0.0000	0.00
69	SAGBEND	-241.69	-29.25	6.56	340.11	0.000	0.000	193.52	0.00	0.0000	0.0000	0.0000	0.00
70	SAGBEND	-246.14	-29.76	6.44	344.58	0.000	0.000	193.47	0.00	0.0000	0.0000	0.0000	0.00
71	SAGBEND	-250.58	-30.25	6.31	349.05	0.000	0.000	193.43	0.00	0.0000	0.0000	0.0000	0.00
72	SAGBEND	-256.59	-30.91	6.14	355.10	0.000	0.000	193.37	0.00	0.0000	0.0000	0.0000	0.00
73	SAGBEND	-262.61	-31.55	5.98	361.15	0.000	0.000	193.31	0.00	0.0000	0.0000	0.0000	0.00
74	SAGBEND	-268.63	-32.17	5.81	367.20	0.000	0.000	193.25	0.00	0.0000	0.0000	0.0000	0.00
75	SAGBEND	-274.65	-32.77	5.64	373.25	0.000	0.000	193.19	0.00	0.0000	0.0000	0.0000	0.00
76	SAGBEND	-280.67	-33.36	5.47	379.30	0.000	0.000	193.13	0.00	0.0000	0.0000	0.0000	0.00
77	SAGBEND	-286.69	-33.93	5.30	385.35	0.000	0.000	193.08	0.00	0.0000	0.0000	0.0000	0.00
78	SAGBEND	-292.72	-34.48	5.13	391.40	0.000	0.000	193.03	0.00	0.0000	0.0000	0.0000	0.00
79	SAGBEND	-298.74	-35.01	4.96	397.45	0.000	0.000	192.98	0.00	0.0000	0.0000	0.0000	0.00
80	SAGBEND	-304.77	-35.52	4.79	403.50	0.000	0.000	192.93	0.00	0.0000	0.0000	0.0000	0.00
81	SAGBEND	-310.80	-36.02	4.63	409.55	0.000	0.000	192.88	0.00	0.0000	0.0000	0.0000	0.00
82	SAGBEND	-316.83	-36.50	4.46	415.60	0.000	0.000	192.84	0.00	0.0000	0.0000	0.0000	0.00
83	SAGBEND	-322.86	-36.96	4.29	421.65	0.000	0.000	192.79	0.00	0.0000	0.0000	0.0000	0.00
84	SAGBEND	-328.90	-37.40	4.12	427.70	0.000	0.000	192.75	0.00	0.0000	0.0000	0.0000	0.00
85	SAGBEND	-334.93	-37.83	3.95	433.75	0.000	0.000	192.71	0.00	0.0000	0.0000	0.0000	0.00
86	SAGBEND	-340.97	-38.24	3.78	439.80	0.000	0.000	192.67	0.00	0.0000	0.0000	0.0000	0.00
87	SAGBEND	-347.01	-38.63	3.61	445.85	0.000	0.000	192.64	0.00	0.0000	0.0000	0.0000	0.00
88	SAGBEND	-353.04	-39.00	3.44	451.90	0.000	0.000	192.60	0.00	0.0000	0.0000	0.0000	0.00
89	SAGBEND	-359.08	-39.35	3.27	457.95	0.000	0.000	192.57	0.00	0.0000	0.0000	0.0000	0.00
90	SAGBEND	-365.12	-39.69	3.10	464.00	0.000	0.000	192.54	0.00	0.0000	0.0000	0.0000	0.00
91	SAGBEND	-371.17	-40.01	2.93	470.05	0.000	0.000	192.51	0.00	0.0000	0.0000	0.0000	0.00
92	SAGBEND	-377.21	-40.31	2.76	476.10	0.000	0.000	192.48	0.00	0.0000	0.0000	0.0000	0.00
93	SAGBEND	-383.25	-40.59	2.59	482.15	0.000	0.000	192.45	0.00	0.0000	0.0000	0.0000	0.00
94	SAGBEND	-389.30	-40.85	2.42	488.20	0.000	0.000	192.43	0.00	0.0000	0.0000	0.0000	0.00
95	SAGBEND	-395.34	-41.10	2.25	494.25	0.000	0.000	192.40	0.00	0.0000	0.0000	0.0000	0.00
96	SAGBEND	-401.39	-41.33	2.08	500.30	0.000	0.000	192.38	0.00	0.0000	0.0000	0.0000	0.00
97	SAGBEND	-407.43	-41.54	1.91	506.35	0.000	0.000	192.36	0.00	0.0000	0.0000	0.0000	0.00
98	SAGBEND	-413.48	-41.73	1.74	512.40	0.000	0.000	192.34	0.00	0.0000	0.0000	0.0000	0.00
99	SAGBEND	-419.53	-41.91	1.57	518.45	0.000	0.000	192.33	0.00	0.0000	0.0000	0.0000	0.00
100	SAGBEND	-425.58	-42.06	1.40	524.50	0.000	0.000	192.31	0.00	0.0000	0.0000	0.0000	0.00
101	SAGBEND	-431.62	-42.20	1.23	530.55	0.000	0.000	192.30	0.00	0.0000	0.0000	0.0000	0.00
102	SAGBEND	-437.67	-42.32	1.06	536.60	0.000	0.000	192.29	0.00	0.0000	0.0000	0.0000	0.00
103	SAGBEND	-443.72	-42.43	0.89	542.65	0.000	0.000	192.28	0.00	0.0000	0.0000	0.0000	0.00
104	SAGBEND	-449.77	-42.51	0.72	548.70	0.000	0.000	192.27	0.00	0.0000	0.0000	0.0000	0.00
105	SAGBEND	-455.82	-42.58	0.55	554.75	0.000	0.000	192.26	0.00	0.0000	0.0000	0.0000	0.00

S T A T I C P I P E C O O R D I N A T E S, F O R C E S A N D S T R A I N S

NODE NO.	PIPE SECTION	X COORD (M)	Y COORD (M)	VERT ANGLE (DEG)	PIPE LENGTH (M)	SUPPORT REACTION (KN)	SEPARA -TION (M)	AXIAL TENSION (KN)	BENDING MOMENT (KN-M)	TENSILE STRAIN (PCT)	BENDING STRAIN (PCT)	TOTAL STRAIN (PCT)	PERCNT ALLOW (PCT)
106	SAGBEND	-461.87	-42.63	0.38	560.80	0.000	0.000	192.26	0.00	0.0000	0.0000	0.0000	0.00

107	SAGBEND	-467.92	-42.66	0.21	566.85	0.001	0.000	192.26	0.00	0.0000	0.0000	0.0000	0.00
108	SEABED	-473.97	-42.67	0.04	572.90	0.214	0.000	192.26	0.00	0.0000	0.0000	0.0000	0.00
109	SEABED	-480.02	-42.67	0.01	578.95	0.522	0.000	192.26	0.00	0.0000	0.0000	0.0000	0.00
110	SEABED	-486.07	-42.67	0.00	585.00	0.566	0.000	192.26	0.00	0.0000	0.0000	0.0000	0.00
111	SEABED	-492.12	-42.67	0.00	591.05	0.571	0.000	192.26	0.00	0.0000	0.0000	0.0000	0.00
112	SEABED	-498.17	-42.67	0.00	597.10	0.571	0.000	192.26	0.00	0.0000	0.0000	0.0000	0.00
113	SEABED	-504.22	-42.67	0.00	603.15	0.571	0.000	192.26	0.00	0.0000	0.0000	0.0000	0.00
114	SEABED	-510.27	-42.67	0.00	609.20	0.571	0.000	192.26	0.00	0.0000	0.0000	0.0000	0.00
115	SEABED	-516.32	-42.67	0.00	615.25	0.571	0.000	192.26	0.00	0.0000	0.0000	0.0000	0.00
116	SEABED	-522.37	-42.67	0.00	621.30	0.571	0.000	192.26	0.00	0.0000	0.0000	0.0000	0.00
117	SEABED	-528.42	-42.67	0.00	627.35	0.571	0.000	192.26	0.00	0.0000	0.0000	0.0000	0.00
118	SEABED	-534.47	-42.67	0.00	633.40	0.571	0.000	192.26	0.00	0.0000	0.0000	0.0000	0.00
119	SEABED	-540.52	-42.67	0.00	639.45	0.571	0.000	192.26	0.00	0.0000	0.0000	0.0000	0.00
120	SEABED	-546.57	-42.67	0.00	645.50	0.571	0.000	192.26	0.00	0.0000	0.0000	0.0000	0.00
121	SEABED	-552.62	-42.67	0.00	651.55	0.571	0.000	192.26	0.00	0.0000	0.0000	0.0000	0.00
122	SEABED	-558.67	-42.67	0.00	657.60	0.571	0.000	192.26	0.00	0.0000	0.0000	0.0000	0.00
123	SEABED	-564.72	-42.67	0.00	663.65	0.571	0.000	192.26	0.00	0.0000	0.0000	0.0000	0.00
124	SEABED	-570.77	-42.67	0.00	669.70	0.571	0.000	192.26	0.00	0.0000	0.0000	0.0000	0.00
125	SEABED	-576.82	-42.67	0.00	675.75	0.571	0.000	192.26	0.00	0.0000	0.0000	0.0000	0.00
126	SEABED	-582.87	-42.67	0.00	681.80	0.571	0.000	192.26	0.00	0.0000	0.0000	0.0000	0.00
127	SEABED	-588.92	-42.67	0.00	687.85	0.571	0.000	192.26	0.00	0.0000	0.0000	0.0000	0.00
128	SEABED	-594.97	-42.67	0.00	693.90	0.571	0.000	192.26	0.00	0.0000	0.0000	0.0000	0.00
129	SEABED	-601.02	-42.67	0.00	699.95	0.571	0.000	192.26	0.00	0.0000	0.0000	0.0000	0.00
130	SEABED	-607.07	-42.67	0.00	706.00	0.571	0.000	192.26	0.00	0.0000	0.0000	0.0000	0.00
131	SEABED	-613.12	-42.67	0.00	712.05	0.571	0.000	192.26	0.00	0.0000	0.0000	0.0000	0.00
132	SEABED	-619.17	-42.67	0.00	718.10	0.571	0.000	192.26	0.00	0.0000	0.0000	0.0000	0.00
133	SEABED	-625.22	-42.67	0.00	724.15	0.569	0.000	192.26	0.00	0.0000	0.0000	0.0000	0.00
134	SEABED	-631.27	-42.67	0.00	730.20	0.552	0.000	192.26	0.00	0.0000	0.0000	0.0000	0.00
135	SEABED	-637.32	-42.67	-0.02	736.25	0.362	0.000	192.26	0.00	0.0000	0.0000	0.0000	0.00
136	SEABED	-641.18	-42.67	-0.07	740.11	0.000	0.000	192.26	0.00	0.0000	0.0000	0.0000	0.00

S T A T I C P I P E C O O R D I N A T E S, F O R C E S A N D S T R A I N S

NODE NO.	PIPE SECTION	X COORD (M)	Y COORD (M)	VERT ANGLE (DEG)	PIPE LENGTH (M)	SUPPORT REACTION (KN)	SEPARA -TION (M)	AXIAL TENSION (KN)	BENDING MOMENT (KN-M)	TENSILE STRAIN (PCT)	BENDING STRAIN (PCT)	TOTAL STRAIN (PCT)	PERCNT ALLOW (PCT)
1	LAYBARGE	96.31	6.41	1.93	0.00	9.928	0.000	0.00	2.74	0.0000	0.0021	0.0021	0.00
3	LAYBARGE	84.28	6.05	1.58	12.04	24.171	0.000	-0.73	-19.24	0.0000	-0.0144	0.0144	0.00
5	LAYBARGE	73.45	5.73	1.90	22.87	24.311	0.000	-1.39	-29.28	-0.0001	-0.0219	0.0220	0.00
7	TENSIONR	60.10	5.24	2.31	36.23	32.356	0.000	210.11	-23.67	0.0098	-0.0177	0.0275	0.00
9	LAYBARGE	51.10	4.87	2.20	45.24	0.000	0.000	209.38	30.69	0.0097	0.0230	0.0327	0.00
10	LAYBARGE	46.45	4.70	1.90	49.89	7.500	0.000	209.07	15.79	0.0097	0.0118	0.0215	0.00
12	LAYBARGE	35.36	4.31	2.71	60.99	41.365	0.000	207.99	-86.70	0.0097	-0.0648	0.0745	0.00
14	LAYBARGE	25.34	3.64	4.92	71.03	27.862	0.000	206.72	-93.28	0.0096	-0.0698	0.0794	0.00
16	LAYBARGE	19.31	3.06	6.01	77.09	0.000	0.000	205.70	-56.44	0.0096	-0.0422	0.0518	0.00
17	LAYBARGE	8.88	1.76	8.90	87.60	66.834	0.000	202.16	-194.22	0.0094	-0.1580	0.1674	0.00
19	LAYBARGE	4.91	1.07	10.47	91.63	0.000	0.000	201.57	-99.43	0.0094	-0.0744	0.0837	0.00
20	LAYBARGE	3.09	0.73	10.85	93.48	0.000	0.110	201.01	-64.18	0.0094	-0.0480	0.0573	0.00
24	STINGER	-7.60	-1.37	10.98	104.38	0.000	0.069	198.25	28.25	0.0092	0.0211	0.0303	0.00
26	STINGER	-16.59	-3.06	10.36	113.52	4.512	0.000	196.58	14.23	0.0091	0.0106	0.0198	0.00
29	STINGER	-26.21	-4.81	10.43	123.30	22.581	0.000	194.81	-35.64	0.0089	-0.0267	0.0357	0.00
31	STINGER	-36.96	-6.79	10.16	134.23	0.461	0.000	192.82	37.32	0.0088	0.0279	0.0369	0.00
33	STINGER	-39.91	-7.31	9.85	137.22	0.000	0.475	192.29	42.86	0.0087	0.0321	0.0410	0.00
35	SAGBEND	-45.95	-8.33	9.19	143.35	0.000	0.000	191.29	36.89	0.0087	0.0276	0.0365	0.00
36	SAGBEND	-49.29	-8.86	8.92	146.73	0.000	0.000	190.78	22.99	0.0086	0.0172	0.0261	0.00
37	SAGBEND	-52.63	-9.38	8.82	150.11	0.000	0.000	190.27	0.00	0.0086	0.0000	0.0088	0.00
38	SAGBEND	-57.94	-9.96	6.30	155.46	0.000	0.000	190.45	0.00	0.0000	0.0000	0.0000	0.00
39	SAGBEND	-63.95	-10.63	6.30	161.51	0.000	0.000	190.45	0.00	0.0000	0.0000	0.0000	0.00
40	SAGBEND	-69.96	-11.29	6.29	167.56	0.000	0.000	190.45	0.00	0.0000	0.0000	0.0000	0.00
41	SAGBEND	-75.98	-11.95	6.29	173.61	0.000	0.000	190.45	0.00	0.0000	0.0000	0.0000	0.00
42	SAGBEND	-81.99	-12.62	6.28	179.66	0.000	0.000	190.45	0.00	0.0000	0.0000	0.0000	0.00
43	SAGBEND	-88.01	-13.28	6.28	185.71	0.000	0.000	190.44	0.00	0.0000	0.0000	0.0000	0.00
44	SAGBEND	-94.02	-13.94	6.27	191.76	0.000	0.000	190.44	0.00	0.0000	0.0000	0.0000	0.00
45	SAGBEND	-100.03	-14.60	6.27	197.81	0.000	0.000	190.44	0.00	0.0000	0.0000	0.0000	0.00
46	SAGBEND	-106.05	-15.26	6.26	203.85	0.000	0.000	190.44	0.00	0.0000	0.0000	0.0000	0.00
47	SAGBEND	-112.06	-15.92	6.26	209.90	0.000	0.000	190.44	0.00	0.0000	0.0000	0.0000	0.00
48	SAGBEND	-118.07	-16.58	6.25	215.95	0.000	0.000	190.44	0.00	0.0000	0.0000	0.0000	0.00
49	SAGBEND	-124.09	-17.24	6.25	222.00	0.000	0.000	190.43	0.00	0.0000	0.0000	0.0000	0.00
50	SAGBEND	-130.10	-17.90	6.24	228.05	0.000	0.000	190.43	0.00	0.0000	0.0000	0.0000	0.00
51	SAGBEND	-136.12	-18.55	6.24	234.10	0.000	0.000	190.43	0.00	0.0000	0.0000	0.0000	0.00
52	SAGBEND	-142.13	-19.21	6.24	240.15	0.000	0.000	190.43	0.00	0.0000	0.0000	0.0000	0.00
53	SAGBEND	-148.14	-19.87	6.23	246.20	0.000	0.000	190.43	0.00	0.0000	0.0000	0.0000	0.00
54	SAGBEND	-154.16	-20.53	6.23	252.25	0.000	0.000	190.42	0.00	0.0000	0.0000	0.0000	0.00
55	SAGBEND	-160.17	-21.18	6.22	258.30	0.000	0.000	190.42	0.00	0.0000	0.0000	0.0000	0.00
56	SAGBEND	-166.19	-21.84	6.22	264.35	0.000	0.000	190.42	0.00	0.0000	0.0000	0.0000	0.00
57	SAGBEND	-172.20	-22.49	6.21	270.40	0.000	0.000	190.42	0.00	0.0000	0.0000	0.0000	0.00
58	SAGBEND	-178.22	-23.15	6.21	276.45	0.000	0.000	190.42	0.00	0.0000	0.0000	0.0000	0.00
59	SAGBEND	-184.23	-23.80	6.20	282.50	0.000	0.000	190.42	0.00	0.0000	0.0000	0.0000	0.00
60	SAGBEND	-190.25	-24.45	6.20	288.55	0.000	0.000	190.41	0.00	0.0000	0.0000	0.0000	0.00

S T A T I C P I P E C O O R D I N A T E S, F O R C E S A N D S T R A I N S

NODE NO.	PIPE SECTION	X COORD (M)	Y COORD (M)	VERT ANGLE (DEG)	PIPE LENGTH (M)	SUPPORT REACTION (KN)	SEPARA -TION (M)	AXIAL TENSION (KN)	BENDING MOMENT (KN-M)	TENSILE STRAIN (PCT)	BENDING STRAIN (PCT)	TOTAL STRAIN (PCT)	PERCNT ALLOW (PCT)
61	SAGBEND	-196.26	-25.11	6.19	294.60	0.000	0.000	190.41	0.00	0.0000	0.0000	0.0000	0.00
62	SAGBEND	-202.28	-25.76	6.19	300.65	0.000	0.000	190.41	0.00	0.0000	0.0000	0.0000	0.00
63	SAGBEND	-208.29	-26.41	6.18	306.70	0.000	0.000	190.41	0.00	0.0000	0.0000	0.0000	0.00
64	SAGBEND	-214.30	-27.06	6.18	312.75	0.000	0.000	190.41	0.00	0.0000	0.0000	0.0000	0.00
65	SAGBEND	-220.32	-27.71	6.17	318.80	0.000	0.000	190.41	0.00	0.0000	0.0000	0.0000	0.00
66	SAGBEND	-226.33	-28.36	6.17	324.85	0.000	0.000	190.40	0.00	0.0000	0.0000	0.0000	0.00
67	SAGBEND	-232.35	-29.01	6.16	330.90	0.000	0.000	190.40	0.00	0.0000	0.0000	0.0000	0.00
68	SAGBEND	-238.36	-29.66	6.16	336.95	0.000	0.000	190.40	0.00	0.0000	0.0000	0.0000	0.00
69	SAGBEND	-244.38	-30.31	6.15	343.00	0.000	0.000	190.40	0.00	0.0000	0.0000	0.0000	0.00
70	SAGBEND	-247.91	-30.69	6.15	346.56	0.000	0.000	190.40	0.00	0.0000	0.0000	0.0000	0.00
71	SAGBEND	-251.45	-31.07	6.15	350.11	0.000	0.000	190.40	0.00	0.0000	0.0000	0.0000	0.00
72	SAGBEND	-256.41	-31.60	6.01	355.10	0.000	0.000	190.35	0.00	0.0000	0.0000	0.0000	0.00
73	SAGBEND	-262.43	-32.23	5.84	361.15	0.000	0.000	190.29	0.00	0.0000	0.0000	0.0000	0.00
74	SAGBEND	-268.45	-32.83	5.67	367.20	0.000	0.000	190.23	0.00	0.0000	0.0000	0.0000	0.00
75	SAGBEND	-274.47	-33.42	5.49	373.25	0.000	0.000	190.18	0.00	0.0000	0.0000	0.0000	0.00
76	SAGBEND	-280.49	-33.99	5.32	379.30	0.000	0.000	190.12	0.00	0.0000	0.0000	0.0000	0.00
77	SAGBEND	-286.52	-34.54	5.15	385.35	0.000	0.000	190.07	0.00	0.0000	0.0000	0.0000	0.00
78	SAGBEND	-292.54	-35.08	4.98	391.40	0.000	0.000	190.02	0.00	0.0000	0.0000	0.0000	0.00
79	SAGBEND	-298.57	-35.59	4.81	397.45	0.000	0.000	189.97	0.00	0.0000	0.0000	0.0000	0.00
80	SAGBEND	-304.60	-36.09	4.64	403.50	0.000	0.000	189.92	0.00	0.0000	0.0000	0.0000	0.00
81	SAGBEND	-310.63	-36.57	4.46	409.55	0.000	0.000	189.88	0.00	0.0000	0.0000	0.0000	0.00
82	SAGBEND	-316.66	-37.03	4.29	415.60	0.000	0.000	189.83	0.00	0.0000	0.0000	0.0000	0.00
83	SAGBEND	-322.70	-37.48	4.12	421.65	0.000	0.000	189.79	0.00	0.0000	0.0000	0.0000	0.00
84	SAGBEND	-328.73	-37.90	3.95	427.70	0.000	0.000	189.75	0.00	0.0000	0.0000	0.0000	0.00
85	SAGBEND	-334.77	-38.31	3.78	433.75	0.000	0.000	189.71	0.00	0.0000	0.0000	0.0000	0.00
86	SAGBEND	-340.80	-38.70	3.60	439.80	0.000	0.000	189.68	0.00	0.0000	0.0000	0.0000	0.00
87	SAGBEND	-346.84	-39.07	3.43	445.85	0.000	0.000	189.64	0.00	0.0000	0.0000	0.0000	0.00
88	SAGBEND	-352.88	-39.42	3.26	451.90	0.000	0.000	189.61	0.00	0.0000	0.0000	0.0000	0.00
89	SAGBEND	-358.92	-39.76	3.09	457.95	0.000	0.000	189.58	0.00	0.0000	0.0000	0.0000	0.00
90	SAGBEND	-364.96	-40.08	2.91	464.00	0.000	0.000	189.55	0.00	0.0000	0.0000	0.0000	0.00
91	SAGBEND	-371.01	-40.37	2.74	470.05	0.000	0.000	189.52	0.00	0.0000	0.0000	0.0000	0.00
92	SAGBEND	-377.05	-40.65	2.57	476.10	0.000	0.000	189.49	0.00	0.0000	0.0000	0.0000	0.00
93	SAGBEND	-383.09	-40.92	2.40	482.15	0.000	0.000	189.47	0.00	0.0000	0.0000	0.0000	0.00
94	SAGBEND	-389.14	-41.16	2.22	488.20	0.000	0.000	189.44	0.00	0.0000	0.0000	0.0000	0.00
95	SAGBEND	-395.19	-41.39	2.05	494.25	0.000	0.000	189.42	0.00	0.0000	0.0000	0.0000	0.00
96	SAGBEND	-401.23	-41.59	1.88	500.30	0.000	0.000	189.40	0.00	0.0000	0.0000	0.0000	0.00
97	SAGBEND	-407.28	-41.78	1.71	506.35	0.000	0.000	189.39	0.00	0.0000	0.0000	0.0000	0.00
98	SAGBEND	-413.33	-41.95	1.53	512.40	0.000	0.000	189.37	0.00	0.0000	0.0000	0.0000	0.00
99	SAGBEND	-419.37	-42.11	1.36	518.45	0.000	0.000	189.36	0.00	0.0000	0.0000	0.0000	0.00
100	SAGBEND	-425.42	-42.24	1.19	524.50	0.000	0.000	189.34	0.00	0.0000	0.0000	0.0000	0.00
101	SAGBEND	-431.47	-42.36	1.01	530.55	0.000	0.000	189.33	0.00	0.0000	0.0000	0.0000	0.00
102	SAGBEND	-437.52	-42.46	0.84	536.60	0.000	0.000	189.32	0.00	0.0000	0.0000	0.0000	0.00
103	SAGBEND	-443.57	-42.54	0.67	542.65	0.000	0.000	189.31	0.00	0.0000	0.0000	0.0000	0.00
104	SAGBEND	-449.62	-42.60	0.50	548.70	0.000	0.000	189.31	0.00	0.0000	0.0000	0.0000	0.00
105	SAGBEND	-455.67	-42.64	0.32	554.75	0.000	0.000	189.30	0.00	0.0000	0.0000	0.0000	0.00

S T A T I C P I P E C O O R D I N A T E S, F O R C E S A N D S T R A I N S

NODE NO.	PIPE SECTION	X COORD (M)	Y COORD (M)	VERT ANGLE (DEG)	PIPE LENGTH (M)	SUPPORT REACTION (KN)	SEPARA -TION (M)	AXIAL TENSION (KN)	BENDING MOMENT (KN-M)	TENSILE STRAIN (PCT)	BENDING STRAIN (PCT)	TOTAL STRAIN (PCT)	PERCNT ALLOW (PCT)
106	SAGBEND	-461.72	-42.66	0.15	560.80	0.020	0.000	189.30	-0.01	0.0000	0.0000	0.0000	0.00
107	SEABED	-467.77	-42.67	0.02	566.85	0.365	0.000	189.30	0.00	0.0000	0.0000	0.0000	0.00
108	SEABED	-473.82	-42.67	0.00	572.90	0.550	0.000	189.30	0.00	0.0000	0.0000	0.0000	0.00
109	SEABED	-479.87	-42.67	0.00	578.95	0.569	0.000	189.30	0.00	0.0000	0.0000	0.0000	0.00
110	SEABED	-485.92	-42.67	0.00	585.00	0.571	0.000	189.30	0.00	0.0000	0.0000	0.0000	0.00
111	SEABED	-491.97	-42.67	0.00	591.05	0.571	0.000	189.30	0.00	0.0000	0.0000	0.0000	0.00
112	SEABED	-498.02	-42.67	0.00	597.10	0.571	0.000	189.30	0.00	0.0000	0.0000	0.0000	0.00
113	SEABED	-504.07	-42.67	0.00	603.15	0.571	0.000	189.30	0.00	0.0000	0.0000	0.0000	0.00

114	SEABED	-510.12	-42.67	0.00	609.20	0.571	0.000	189.30	0.00	0.0000	0.0000	0.0000	0.00
115	SEABED	-516.17	-42.67	0.00	615.25	0.571	0.000	189.30	0.00	0.0000	0.0000	0.0000	0.00
116	SEABED	-522.22	-42.67	0.00	621.30	0.571	0.000	189.30	0.00	0.0000	0.0000	0.0000	0.00
117	SEABED	-528.27	-42.67	0.00	627.35	0.571	0.000	189.30	0.00	0.0000	0.0000	0.0000	0.00
118	SEABED	-534.32	-42.67	0.00	633.40	0.571	0.000	189.30	0.00	0.0000	0.0000	0.0000	0.00
119	SEABED	-540.37	-42.67	0.00	639.45	0.571	0.000	189.30	0.00	0.0000	0.0000	0.0000	0.00
120	SEABED	-546.42	-42.67	0.00	645.50	0.571	0.000	189.30	0.00	0.0000	0.0000	0.0000	0.00
121	SEABED	-552.47	-42.67	0.00	651.55	0.571	0.000	189.30	0.00	0.0000	0.0000	0.0000	0.00
122	SEABED	-558.52	-42.67	0.00	657.60	0.571	0.000	189.30	0.00	0.0000	0.0000	0.0000	0.00
123	SEABED	-564.57	-42.67	0.00	663.65	0.571	0.000	189.30	0.00	0.0000	0.0000	0.0000	0.00
124	SEABED	-570.62	-42.67	0.00	669.70	0.571	0.000	189.30	0.00	0.0000	0.0000	0.0000	0.00
125	SEABED	-576.67	-42.67	0.00	675.75	0.571	0.000	189.30	0.00	0.0000	0.0000	0.0000	0.00
126	SEABED	-582.72	-42.67	0.00	681.80	0.571	0.000	189.30	0.00	0.0000	0.0000	0.0000	0.00
127	SEABED	-588.77	-42.67	0.00	687.85	0.571	0.000	189.30	0.00	0.0000	0.0000	0.0000	0.00
128	SEABED	-594.82	-42.67	0.00	693.90	0.571	0.000	189.30	0.00	0.0000	0.0000	0.0000	0.00
129	SEABED	-600.87	-42.67	0.00	699.95	0.571	0.000	189.30	0.00	0.0000	0.0000	0.0000	0.00
130	SEABED	-606.92	-42.67	0.00	706.00	0.571	0.000	189.30	0.00	0.0000	0.0000	0.0000	0.00
131	SEABED	-612.97	-42.67	0.00	712.05	0.571	0.000	189.30	0.00	0.0000	0.0000	0.0000	0.00
132	SEABED	-619.02	-42.67	0.00	718.10	0.571	0.000	189.30	0.00	0.0000	0.0000	0.0000	0.00
133	SEABED	-625.07	-42.67	0.00	724.15	0.571	0.000	189.30	0.00	0.0000	0.0000	0.0000	0.00
134	SEABED	-631.12	-42.67	0.00	730.20	0.571	0.000	189.30	0.00	0.0000	0.0000	0.0000	0.00
135	SEABED	-637.17	-42.67	0.00	736.25	0.567	0.000	189.30	0.00	0.0000	0.0000	0.0000	0.00
136	SEABED	-643.22	-42.67	0.00	742.30	0.446	0.000	189.30	0.00	0.0000	0.0000	0.0000	0.00
137	SEABED	-647.12	-42.67	-0.02	746.20	0.272	0.000	189.30	0.00	0.0000	0.0000	0.0000	0.00
138	SEABED	-651.02	-42.67	-0.07	750.10	0.000	0.000	189.30	0.00	0.0000	0.0000	0.0000	0.00

S T A T I C P I P E C O O R D I N A T E S, F O R C E S A N D S T R A I N S

NODE NO.	PIPE SECTION	X COORD (M)	Y COORD (M)	VERT ANGLE (DEG)	PIPE LENGTH (M)	SUPPORT REACTION (KN)	SEPARA -TION (M)	AXIAL TENSION (KN)	BENDING MOMENT (KN-M)	TENSILE STRAIN (PCT)	BENDING STRAIN (PCT)	TOTAL STRAIN (PCT)	PERCNT ALLOW (PCT)
1	LAYBARGE	96.31	6.41	1.93	0.00	9.936	0.000	0.00	2.74	0.0000	0.0021	0.0021	0.00
3	LAYBARGE	84.28	6.05	1.58	12.04	24.116	0.000	-0.73	-19.16	0.0000	-0.0143	0.0144	0.00
5	LAYBARGE	73.45	5.73	1.90	22.87	24.493	0.000	-1.39	-29.64	-0.0001	-0.0222	0.0222	0.00
7	TENSIONR	60.10	5.24	2.30	36.23	31.939	0.000	331.60	-22.58	0.0154	-0.0169	0.0323	0.00
9	LAYBARGE	51.10	4.87	2.21	45.24	0.000	0.000	330.88	27.70	0.0154	0.0207	0.0361	0.00
10	LAYBARGE	46.45	4.70	1.94	49.89	8.540	0.000	330.56	13.49	0.0154	0.0101	0.0255	0.00
12	LAYBARGE	35.36	4.31	2.59	60.99	35.603	0.000	329.54	-78.67	0.0153	-0.0588	0.0742	0.00
14	LAYBARGE	25.34	3.64	5.39	71.03	60.652	0.000	327.77	-155.65	0.0152	-0.1166	0.1319	0.00
16	LAYBARGE	19.32	2.98	6.78	77.09	0.000	0.000	327.09	-26.99	0.0152	-0.0202	0.0354	0.00
17	LAYBARGE	8.88	1.76	6.34	87.60	15.513	0.000	324.64	31.16	0.0151	0.0233	0.0384	0.00
19	LAYBARGE	4.87	1.33	5.85	91.63	0.000	0.000	323.70	64.17	0.0151	0.0480	0.0631	0.00
20	LAYBARGE	3.06	1.15	5.53	93.45	0.000	0.527	323.30	74.81	0.0150	0.0559	0.0710	0.00
24	STINGER	-7.48	0.34	3.18	104.02	0.000	0.642	321.65	84.23	0.0150	0.0630	0.0780	0.00
26	STINGER	-16.58	-0.04	1.80	113.13	0.000	0.052	321.08	19.50	0.0149	0.0146	0.0295	0.00
29	STINGER	-26.47	-0.42	3.39	123.03	55.313	0.000	320.02	-175.03	0.0149	-0.1329	0.1477	0.00
31	STINGER	-37.36	-1.37	6.20	133.96	18.015	0.000	319.63	-73.32	0.0148	-0.0548	0.0697	0.00
33	STINGER	-40.35	-1.71	6.61	136.96	0.000	0.377	319.39	-35.67	0.0148	-0.0267	0.0415	0.00
35	SAGBEND	-46.69	-2.46	6.82	143.35	0.000	0.000	318.66	3.09	0.0148	0.0023	0.0171	0.00
36	SAGBEND	-50.05	-2.86	6.77	146.73	0.000	0.000	318.26	6.73	0.0147	0.0050	0.0198	0.00
37	SAGBEND	-53.40	-3.26	6.73	150.11	0.000	0.000	317.87	0.00	0.0147	0.0000	0.0148	0.00
38	SAGBEND	-58.71	-3.83	6.08	155.46	0.000	0.000	317.89	0.00	0.0000	0.0000	0.0000	0.00
39	SAGBEND	-64.73	-4.47	6.08	161.51	0.000	0.000	317.89	0.00	0.0000	0.0000	0.0000	0.00
40	SAGBEND	-70.75	-5.11	6.07	167.56	0.000	0.000	317.88	0.00	0.0000	0.0000	0.0000	0.00
41	SAGBEND	-76.76	-5.75	6.07	173.61	0.000	0.000	317.88	0.00	0.0000	0.0000	0.0000	0.00
42	SAGBEND	-82.78	-6.39	6.07	179.66	0.000	0.000	317.88	0.00	0.0000	0.0000	0.0000	0.00
43	SAGBEND	-88.79	-7.03	6.07	185.71	0.000	0.000	317.88	0.00	0.0000	0.0000	0.0000	0.00
44	SAGBEND	-94.81	-7.66	6.06	191.76	0.000	0.000	317.88	0.00	0.0000	0.0000	0.0000	0.00
45	SAGBEND	-100.83	-8.30	6.06	197.81	0.000	0.000	317.88	0.00	0.0000	0.0000	0.0000	0.00
46	SAGBEND	-106.84	-8.94	6.06	203.86	0.000	0.000	317.87	0.00	0.0000	0.0000	0.0000	0.00
47	SAGBEND	-112.86	-9.58	6.05	209.91	0.000	0.000	317.87	0.00	0.0000	0.0000	0.0000	0.00
48	SAGBEND	-118.88	-10.22	6.05	215.96	0.000	0.000	317.87	0.00	0.0000	0.0000	0.0000	0.00
49	SAGBEND	-124.89	-10.86	6.05	222.01	0.000	0.000	317.87	0.00	0.0000	0.0000	0.0000	0.00
50	SAGBEND	-130.91	-11.49	6.05	228.06	0.000	0.000	317.87	0.00	0.0000	0.0000	0.0000	0.00
51	SAGBEND	-136.93	-12.13	6.04	234.11	0.000	0.000	317.87	0.00	0.0000	0.0000	0.0000	0.00
52	SAGBEND	-142.94	-12.77	6.04	240.16	0.000	0.000	317.86	0.00	0.0000	0.0000	0.0000	0.00
53	SAGBEND	-148.96	-13.40	6.04	246.21	0.000	0.000	317.86	0.00	0.0000	0.0000	0.0000	0.00
54	SAGBEND	-154.98	-14.04	6.03	252.26	0.000	0.000	317.86	0.00	0.0000	0.0000	0.0000	0.00
55	SAGBEND	-160.99	-14.68	6.03	258.31	0.000	0.000	317.86	0.00	0.0000	0.0000	0.0000	0.00
56	SAGBEND	-167.01	-15.31	6.03	264.36	0.000	0.000	317.86	0.00	0.0000	0.0000	0.0000	0.00
57	SAGBEND	-173.03	-15.95	6.03	270.41	0.000	0.000	317.86	0.00	0.0000	0.0000	0.0000	0.00
58	SAGBEND	-179.04	-16.58	6.02	276.46	0.000	0.000	317.85	0.00	0.0000	0.0000	0.0000	0.00
59	SAGBEND	-185.06	-17.22	6.02	282.51	0.000	0.000	317.85	0.00	0.0000	0.0000	0.0000	0.00
60	SAGBEND	-191.08	-17.85	6.02	288.56	0.000	0.000	317.85	0.00	0.0000	0.0000	0.0000	0.00

S T A T I C P I P E C O O R D I N A T E S, F O R C E S A N D S T R A I N S

NODE NO.	PIPE SECTION	X COORD (M)	Y COORD (M)	VERT ANGLE (DEG)	PIPE LENGTH (M)	SUPPORT REACTION (KN)	SEPARA -TION (M)	AXIAL TENSION (KN)	BENDING MOMENT (KN-M)	TENSILE STRAIN (PCT)	BENDING STRAIN (PCT)	TOTAL STRAIN (PCT)	PERCNT ALLOW (PCT)
61	SAGBEND	-197.09	-18.48	6.01	294.61	0.000	0.000	317.85	0.00	0.0000	0.0000	0.0000	0.00
62	SAGBEND	-203.11	-19.12	6.01	300.66	0.000	0.000	317.85	0.00	0.0000	0.0000	0.0000	0.00
63	SAGBEND	-209.13	-19.75	6.01	306.71	0.000	0.000	317.85	0.00	0.0000	0.0000	0.0000	0.00
64	SAGBEND	-215.14	-20.38	6.01	312.76	0.000	0.000	317.84	0.00	0.0000	0.0000	0.0000	0.00
65	SAGBEND	-221.16	-21.02	6.00	318.81	0.000	0.000	317.84	0.00	0.0000	0.0000	0.0000	0.00
66	SAGBEND	-227.18	-21.65	6.00	324.86	0.000	0.000	317.84	0.00	0.0000	0.0000	0.0000	0.00
67	SAGBEND	-233.19	-22.28	6.00	330.91	0.000	0.000	317.84	0.00	0.0000	0.0000	0.0000	0.00
68	SAGBEND	-239.21	-22.91	5.99	336.96	0.000	0.000	317.84	0.00	0.0000	0.0000	0.0000	0.00
69	SAGBEND	-245.23	-23.55	5.99	343.01	0.000	0.000	317.84	0.00	0.0000	0.0000	0.0000	0.00
70	SAGBEND	-248.76	-23.92	5.99	346.56	0.000	0.000	317.84	0.00	0.0000	0.0000	0.0000	0.00
71	SAGBEND	-252.30	-24.29	5.99	350.12	0.000	0.000	317.83	0.00	0.0000	0.0000	0.0000	0.00
72	SAGBEND	-257.26	-24.81	5.90	355.11	0.000	0.000	317.79	0.00	0.0000	0.0000	0.0000	0.00
73	SAGBEND	-263.28	-25.42	5.80	361.16	0.000	0.000	317.73	0.00	0.0000	0.0000	0.0000	0.00
74	SAGBEND	-269.30	-26.03	5.70	367.21	0.000	0.000	317.67	0.00	0.0000	0.0000	0.0000	0.00
75	SAGBEND	-275.32	-26.62	5.60	373.26	0.000	0.000	317.61	0.00	0.0000	0.0000	0.0000	0.00
76	SAGBEND	-281.34	-27.21	5.49	379.31	0.000	0.000	317.56	0.00	0.0000	0.0000	0.0000	0.00
77	SAGBEND	-287.37	-27.78	5.39	385.36	0.000	0.000	317.51	0.00	0.0000	0.0000	0.0000	0.00
78	SAGBEND	-293.39	-28.35	5.29	391.41	0.000	0.000	317.45	0.00	0.0000	0.0000	0.0000	0.00
79	SAGBEND	-299.42	-28.90	5.19	397.46	0.000	0.000	317.40	0.00	0.0000	0.0000	0.0000	0.00
80	SAGBEND	-305.44	-29.44	5.08	403.51	0.000	0.000	317.35	0.00	0.0000	0.0000	0.0000	0.00
81	SAGBEND	-311.47	-29.97	4.98	409.56	0.000	0.000	317.30	0.00	0.0000	0.0000	0.0000	0.00
82	SAGBEND	-317.50	-30.49	4.88	415.61	0.000	0.000	317.25	0.00	0.0000	0.0000	0.0000	0.00
83	SAGBEND	-323.53	-31.00	4.78	421.66	0.000	0.000	317.20	0.00	0.0000	0.0000	0.0000	0.00
84	SAGBEND	-329.55	-31.50	4.67	427.71	0.000	0.000	317.15	0.00	0.0000	0.0000	0.0000	0.00
85	SAGBEND	-335.59	-31.98	4.57	433.76	0.000	0.000	317.11	0.00	0.0000	0.0000	0.0000	0.00
86	SAGBEND	-341.62	-32.46	4.47	439.81	0.000	0.000	317.06	0.00	0.0000	0.0000	0.0000	0.00
87	SAGBEND	-347.65	-32.93	4.36	445.86	0.000	0.000	317.02	0.00	0.0000	0.0000	0.0000	0.00
88	SAGBEND	-353.68	-33.38	4.26	451.91	0.000	0.000	316.98	0.00	0.0000	0.0000	0.0000	0.00
89	SAGBEND	-359.72	-33.83	4.16	457.96	0.000	0.000	316.93	0.00	0.0000	0.0000	0.0000	0.00
90	SAGBEND	-365.75	-34.26	4.06	464.01	0.000	0.000	316.89	0.00	0.0000	0.0000	0.0000	0.00
91	SAGBEND	-371.79	-34.68	3.95	470.06	0.000	0.000	316.85	0.00	0.0000	0.0000	0.0000	0.00
92	SAGBEND	-377.82	-35.09	3.85	476.11	0.000	0.000	316.82	0.00	0.0000	0.0000	0.0000	0.00
93	SAGBEND	-383.86	-35.49	3.75	482.16	0.000	0.000	316.78	0.00	0.0000	0.0000	0.0000	0.00
94	SAGBEND	-389.90	-35.88	3.64	488.21	0.000	0.000	316.74	0.00	0.0000	0.0000	0.0000	0.00
95	SAGBEND	-395.93	-36.26	3.54	494.26	0.000	0.000	316.70	0.00	0.0000	0.0000	0.0000	0.00
96	SAGBEND	-401.97	-36.63	3.44	500.31	0.000	0.000	316.67	0.00	0.0000	0.0000	0.0000	0.00
97	SAGBEND	-408.01	-36.99	3.33	506.36	0.000	0.000	316.64	0.00	0.0000	0.0000	0.0000	0.00
98	SAGBEND	-414.05	-37.34	3.23	512.41	0.000	0.000	316.60	0.00	0.0000	0.0000	0.0000	0.00
99	SAGBEND	-420.09	-37.67	3.13	518.46	0.000	0.000	316.57	0.00	0.0000	0.0000	0.0000	0.00
100	SAGBEND	-426.14	-38.00	3.03	524.52	0.000	0.000	316.54	0.00	0.0000	0.0000	0.0000	0.00
101	SAGBEND	-432.18	-38.31	2.92	530.57	0.000	0.000	316.51	0.00	0.0000	0.0000	0.0000	0.00
102	SAGBEND	-438.22	-38.61	2.82	536.62	0.000	0.000	316.48	0.00	0.0000	0.0000	0.0000	0.00
103	SAGBEND	-444.26	-38.91	2.72	542.67	0.000	0.000	316.46	0.00	0.0000	0.0000	0.0000	0.00
104	SAGBEND	-450.31	-39.19	2.61	548.72	0.000	0.000	316.43	0.00	0.0000	0.0000	0.0000	0.00
105	SAGBEND	-456.35	-39.46	2.51	554.77	0.000	0.000	316.40	0.00	0.0000	0.0000	0.0000	0.00

S T A T I C P I P E C O O R D I N A T E S, F O R C E S A N D S T R A I N S

NODE NO.	PIPE SECTION	X COORD (M)	Y COORD (M)	VERT ANGLE (DEG)	PIPE LENGTH (M)	SUPPORT REACTION (KN)	SEPARA -TION (M)	AXIAL TENSION (KN)	BENDING MOMENT (KN-M)	TENSILE STRAIN (PCT)	BENDING STRAIN (PCT)	TOTAL STRAIN (PCT)	PERCNT ALLOW (PCT)
106	SAGBEND	-462.40	-39.72	2.41	560.82	0.000	0.000	316.38	0.00	0.0000	0.0000	0.0000	0.00
107	SAGBEND	-468.44	-39.96	2.30	566.87	0.000	0.000	316.36	0.00	0.0000	0.0000	0.0000	0.00
108	SAGBEND	-474.49	-40.20	2.20	572.92	0.000	0.000	316.33	0.00	0.0000	0.0000	0.0000	0.00
109	SAGBEND	-480.53	-40.43	2.10	578.97	0.000	0.000	316.31	0.00	0.0000	0.0000	0.0000	0.00
110	SAGBEND	-486.58	-40.64	1.99	585.02	0.000	0.000	316.29	0.00	0.0000	0.0000	0.0000	0.00
111	SAGBEND	-492.63	-40.85	1.89	591.07	0.000	0.000	316.27	0.00	0.0000	0.0000	0.0000	0.00
112	SAGBEND	-498.67	-41.04	1.79	597.12	0.000	0.000	316.25	0.00	0.0000	0.0000	0.0000	0.00
113	SAGBEND	-504.72	-41.23	1.68	603.17	0.000	0.000	316.24	0.00	0.0000	0.0000	0.0000	0.00
114	SAGBEND	-510.77	-41.40	1.58	609.22	0.000	0.000	316.22	0.00	0.0000	0.0000	0.0000	0.00
115	SAGBEND	-516.82	-41.56	1.48	615.27	0.000	0.000	316.21	0.00	0.0000	0.0000	0.0000	0.00
116	SAGBEND	-522.86	-41.71	1.37	621.32	0.000	0.000	316.19	0.00	0.0000	0.0000	0.0000	0.00
117	SAGBEND	-528.91	-41.85	1.27	627.37	0.000	0.000	316.18	0.00	0.0000	0.0000	0.0000	0.00
118	SAGBEND	-534.96	-41.98	1.17	633.42	0.000	0.000	316.17	0.00	0.0000	0.0000	0.0000	0.00
119	SAGBEND	-541.01	-42.10	1.06	639.47	0.000	0.000	316.15	0.00	0.0000	0.0000	0.0000	0.00
120	SAGBEND	-547.06	-42.20	0.96	645.52	0.000	0.000	316.14	0.00	0.0000	0.0000	0.0000	0.00

121	SAGBEND	-553.11	-42.30	0.86	651.57	0.000	0.000	316.14	0.00	0.0000	0.0000	0.0000	0.00
122	SAGBEND	-559.16	-42.38	0.75	657.62	0.000	0.000	316.13	0.00	0.0000	0.0000	0.0000	0.00
123	SAGBEND	-565.21	-42.46	0.65	663.67	0.000	0.000	316.12	0.00	0.0000	0.0000	0.0000	0.00
124	SAGBEND	-571.26	-42.52	0.54	669.72	0.000	0.000	316.11	0.00	0.0000	0.0000	0.0000	0.00
125	SAGBEND	-577.31	-42.57	0.44	675.77	0.000	0.000	316.11	0.00	0.0000	0.0000	0.0000	0.00
126	SAGBEND	-583.36	-42.61	0.34	681.82	0.000	0.000	316.11	0.00	0.0000	0.0000	0.0000	0.00
127	SAGBEND	-589.41	-42.64	0.23	687.87	0.000	0.000	316.10	0.00	0.0000	0.0000	0.0000	0.00
128	SAGBEND	-595.46	-42.66	0.13	693.92	0.002	0.000	316.10	0.00	0.0000	0.0000	0.0000	0.00
129	SEABED	-601.51	-42.67	0.03	699.97	0.216	0.000	316.10	0.00	0.0000	0.0000	0.0000	0.00
130	SEABED	-607.56	-42.67	0.01	706.02	0.501	0.000	316.10	0.00	0.0000	0.0000	0.0000	0.00
131	SEABED	-613.61	-42.67	0.00	712.07	0.559	0.000	316.10	0.00	0.0000	0.0000	0.0000	0.00
132	SEABED	-619.66	-42.67	0.00	718.12	0.569	0.000	316.10	0.00	0.0000	0.0000	0.0000	0.00
133	SEABED	-625.71	-42.67	0.00	724.17	0.570	0.000	316.10	0.00	0.0000	0.0000	0.0000	0.00
134	SEABED	-631.76	-42.67	0.00	730.22	0.569	0.000	316.10	0.00	0.0000	0.0000	0.0000	0.00
135	SEABED	-637.81	-42.67	0.00	736.27	0.559	0.000	316.10	0.00	0.0000	0.0000	0.0000	0.00
136	SEABED	-643.86	-42.67	-0.01	742.32	0.425	0.000	316.10	0.00	0.0000	0.0000	0.0000	0.00
137	SEABED	-647.76	-42.67	-0.02	746.23	0.241	0.000	316.10	0.00	0.0000	0.0000	0.0000	0.00
138	SEABED	-651.67	-42.67	-0.06	750.13	0.000	0.000	316.10	0.00	0.0000	0.0000	0.0000	0.00

S T A T I C P I P E C O O R D I N A T E S, F O R C E S A N D S T R A I N S

NODE NO.	PIPE SECTION	X COORD (M)	Y COORD (M)	VERT ANGLE (DEG)	PIPE LENGTH (M)	SUPPORT REACTION (KN)	SEPARA -TION (M)	AXIAL TENSION (KN)	BENDING MOMENT (KN-M)	TENSILE STRAIN (PCT)	BENDING STRAIN (PCT)	TOTAL STRAIN (PCT)	PERCNT ALLOW (PCT)
1	LAYBARGE	96.31	6.41	1.93	0.00	9.932	0.000	0.00	2.74	0.0000	0.0021	0.0021	0.00
3	LAYBARGE	84.28	6.05	1.58	12.04	24.143	0.000	-0.73	-19.20	0.0000	-0.0144	0.0144	0.00
5	LAYBARGE	73.45	5.73	1.90	22.87	24.405	0.000	-1.39	-29.46	-0.0001	-0.0220	0.0221	0.00
7	TENSIONR	60.10	5.24	2.30	36.23	32.240	0.000	331.61	-23.04	0.0154	-0.0172	0.0327	0.00
9	LAYBARGE	51.10	4.87	2.21	45.24	0.000	0.000	330.89	29.15	0.0154	0.0218	0.0372	0.00
10	LAYBARGE	46.45	4.70	1.91	49.89	6.743	0.000	330.57	16.06	0.0154	0.0120	0.0274	0.00
12	LAYBARGE	35.36	4.31	2.70	60.99	44.384	0.000	329.48	-85.99	0.0153	-0.0643	0.0796	0.00
14	LAYBARGE	25.34	3.64	4.97	71.03	36.030	0.000	328.16	-103.42	0.0153	-0.0774	0.0926	0.00
16	LAYBARGE	19.31	3.05	6.10	77.09	0.000	0.000	327.20	-50.77	0.0152	-0.0380	0.0532	0.00
17	LAYBARGE	8.88	1.76	8.67	87.60	70.259	0.000	323.76	-182.50	0.0151	-0.1406	0.1557	0.00
19	LAYBARGE	4.90	1.09	10.12	91.63	0.000	0.000	323.15	-90.42	0.0150	-0.0676	0.0827	0.00
20	LAYBARGE	3.09	0.76	10.47	93.48	0.000	0.142	322.59	-58.72	0.0150	-0.0439	0.0589	0.00
24	STINGER	-7.63	-1.28	10.89	104.39	0.000	0.154	319.86	-2.21	0.0148	-0.0017	0.0165	0.00
26	STINGER	-16.60	-3.04	11.60	113.53	21.169	0.000	317.96	-77.66	0.0147	-0.0581	0.0729	0.00
29	STINGER	-26.22	-5.19	13.68	123.38	30.821	0.000	315.63	-121.30	0.0145	-0.0907	0.1054	0.00
31	STINGER	-36.78	-8.00	16.00	134.31	26.303	0.000	312.98	-86.03	0.0143	-0.0643	0.0789	0.00
33	STINGER	-39.65	-8.84	16.48	137.30	0.000	0.380	312.28	-40.10	0.0143	-0.0300	0.0445	0.00
35	SAGBEND	-45.45	-10.57	16.62	143.35	0.000	0.000	310.58	15.74	0.0142	0.0118	0.0262	0.00
36	SAGBEND	-51.25	-12.28	16.13	149.40	0.000	0.000	308.83	43.36	0.0140	0.0324	0.0468	0.00
37	SAGBEND	-57.07	-13.92	15.34	155.45	0.000	0.000	307.16	57.22	0.0139	0.0428	0.0571	0.00
38	SAGBEND	-62.92	-15.47	14.39	161.50	0.000	0.000	305.59	64.32	0.0138	0.0481	0.0623	0.00
39	SAGBEND	-68.79	-16.93	13.36	167.55	0.000	0.000	304.13	68.07	0.0137	0.0509	0.0650	0.00
40	SAGBEND	-74.69	-18.27	12.29	173.60	0.000	0.000	302.78	70.08	0.0136	0.0524	0.0665	0.00
41	SAGBEND	-80.62	-19.50	11.19	179.65	0.000	0.000	301.55	71.07	0.0135	0.0532	0.0672	0.00
42	SAGBEND	-86.56	-20.62	10.09	185.70	0.000	0.000	300.43	71.27	0.0134	0.0533	0.0673	0.00
43	SAGBEND	-92.53	-21.62	8.99	191.75	0.000	0.000	299.43	70.50	0.0133	0.0527	0.0666	0.00
44	SAGBEND	-98.51	-22.51	7.91	197.80	0.000	0.000	298.55	68.14	0.0133	0.0510	0.0648	0.00
45	SAGBEND	-104.51	-23.29	6.89	203.85	0.000	0.000	297.79	62.76	0.0132	0.0469	0.0608	0.00
46	SAGBEND	-110.52	-23.96	5.99	209.90	0.000	0.000	297.14	51.47	0.0132	0.0385	0.0523	0.00
47	SAGBEND	-116.54	-24.56	5.35	215.95	0.000	0.000	296.59	28.40	0.0131	0.0212	0.0350	0.00
48	SAGBEND	-120.68	-24.94	5.19	220.11	0.000	0.000	296.23	0.00	0.0131	0.0000	0.0138	0.00
49	SAGBEND	-124.65	-25.18	3.52	224.08	0.000	0.000	296.35	0.00	0.0000	0.0000	0.0000	0.00
50	SAGBEND	-128.61	-25.43	3.52	228.05	0.000	0.000	296.35	0.00	0.0000	0.0000	0.0000	0.00
51	SAGBEND	-134.65	-25.80	3.52	234.10	0.000	0.000	296.35	0.00	0.0000	0.0000	0.0000	0.00
52	SAGBEND	-140.69	-26.17	3.52	240.15	0.000	0.000	296.35	0.00	0.0000	0.0000	0.0000	0.00
53	SAGBEND	-146.73	-26.54	3.51	246.20	0.000	0.000	296.35	0.00	0.0000	0.0000	0.0000	0.00
54	SAGBEND	-152.77	-26.91	3.51	252.25	0.000	0.000	296.35	0.00	0.0000	0.0000	0.0000	0.00
55	SAGBEND	-158.80	-27.28	3.51	258.30	0.000	0.000	296.35	0.00	0.0000	0.0000	0.0000	0.00
56	SAGBEND	-164.84	-27.65	3.50	264.35	0.000	0.000	296.35	0.00	0.0000	0.0000	0.0000	0.00
57	SAGBEND	-170.88	-28.02	3.50	270.40	0.000	0.000	296.35	0.00	0.0000	0.0000	0.0000	0.00
58	SAGBEND	-176.92	-28.39	3.50	276.45	0.000	0.000	296.35	0.00	0.0000	0.0000	0.0000	0.00
59	SAGBEND	-182.96	-28.76	3.49	282.50	0.000	0.000	296.35	0.00	0.0000	0.0000	0.0000	0.00
60	SAGBEND	-189.00	-29.13	3.49	288.55	0.000	0.000	296.34	0.00	0.0000	0.0000	0.0000	0.00

S T A T I C P I P E C O O R D I N A T E S, F O R C E S A N D S T R A I N S

NODE NO.	PIPE SECTION	X COORD (M)	Y COORD (M)	VERT ANGLE (DEG)	PIPE LENGTH (M)	SUPPORT REACTION (KN)	SEPARA -TION (M)	AXIAL TENSION (KN)	BENDING MOMENT (KN-M)	TENSILE STRAIN (PCT)	BENDING STRAIN (PCT)	TOTAL STRAIN (PCT)	PERCNT ALLOW (PCT)
61	SAGBEND	-195.04	-29.50	3.49	294.60	0.000	0.000	296.34	0.00	0.0000	0.0000	0.0000	0.00
62	SAGBEND	-201.07	-29.86	3.49	300.65	0.000	0.000	296.34	0.00	0.0000	0.0000	0.0000	0.00
63	SAGBEND	-207.11	-30.23	3.48	306.70	0.000	0.000	296.34	0.00	0.0000	0.0000	0.0000	0.00
64	SAGBEND	-213.15	-30.60	3.48	312.75	0.000	0.000	296.34	0.00	0.0000	0.0000	0.0000	0.00
65	SAGBEND	-219.19	-30.97	3.48	318.80	0.000	0.000	296.34	0.00	0.0000	0.0000	0.0000	0.00
66	SAGBEND	-225.23	-31.33	3.47	324.85	0.000	0.000	296.34	0.00	0.0000	0.0000	0.0000	0.00
67	SAGBEND	-231.27	-31.70	3.47	330.90	0.000	0.000	296.34	0.00	0.0000	0.0000	0.0000	0.00
68	SAGBEND	-237.31	-32.06	3.47	336.95	0.000	0.000	296.34	0.00	0.0000	0.0000	0.0000	0.00
69	SAGBEND	-243.35	-32.43	3.46	343.00	0.000	0.000	296.34	0.00	0.0000	0.0000	0.0000	0.00
70	SAGBEND	-249.38	-32.80	3.46	349.05	0.000	0.000	296.33	0.00	0.0000	0.0000	0.0000	0.00
71	SAGBEND	-255.42	-33.16	3.46	355.10	0.000	0.000	296.33	0.00	0.0000	0.0000	0.0000	0.00
72	SAGBEND	-261.46	-33.53	3.45	361.15	0.000	0.000	296.33	0.00	0.0000	0.0000	0.0000	0.00
73	SAGBEND	-267.50	-33.89	3.45	367.20	0.000	0.000	296.33	0.00	0.0000	0.0000	0.0000	0.00
74	SAGBEND	-273.54	-34.25	3.45	373.25	0.000	0.000	296.33	0.00	0.0000	0.0000	0.0000	0.00
75	SAGBEND	-279.58	-34.62	3.45	379.30	0.000	0.000	296.33	0.00	0.0000	0.0000	0.0000	0.00
76	SAGBEND	-285.62	-34.98	3.44	385.35	0.000	0.000	296.33	0.00	0.0000	0.0000	0.0000	0.00
77	SAGBEND	-291.66	-35.34	3.44	391.40	0.000	0.000	296.33	0.00	0.0000	0.0000	0.0000	0.00
78	SAGBEND	-297.70	-35.71	3.44	397.45	0.000	0.000	296.33	0.00	0.0000	0.0000	0.0000	0.00
79	SAGBEND	-303.73	-36.07	3.43	403.50	0.000	0.000	296.33	0.00	0.0000	0.0000	0.0000	0.00
80	SAGBEND	-309.77	-36.43	3.43	409.55	0.000	0.000	296.33	0.00	0.0000	0.0000	0.0000	0.00
81	SAGBEND	-315.81	-36.79	3.43	415.60	0.000	0.000	296.32	0.00	0.0000	0.0000	0.0000	0.00
82	SAGBEND	-320.31	-37.06	3.43	420.11	0.000	0.000	296.32	0.00	0.0000	0.0000	0.0000	0.00
83	SAGBEND	-324.10	-37.29	3.36	423.90	0.000	0.000	296.30	0.00	0.0000	0.0000	0.0000	0.00
84	SAGBEND	-327.89	-37.51	3.29	427.70	0.000	0.000	296.28	0.00	0.0000	0.0000	0.0000	0.00
85	SAGBEND	-333.93	-37.85	3.18	433.75	0.000	0.000	296.25	0.00	0.0000	0.0000	0.0000	0.00
86	SAGBEND	-339.97	-38.18	3.07	439.80	0.000	0.000	296.22	0.00	0.0000	0.0000	0.0000	0.00
87	SAGBEND	-346.01	-38.50	2.96	445.85	0.000	0.000	296.19	0.00	0.0000	0.0000	0.0000	0.00
88	SAGBEND	-352.05	-38.80	2.85	451.90	0.000	0.000	296.16	0.00	0.0000	0.0000	0.0000	0.00
89	SAGBEND	-358.10	-39.10	2.74	457.95	0.000	0.000	296.13	0.00	0.0000	0.0000	0.0000	0.00
90	SAGBEND	-364.14	-39.38	2.62	464.00	0.000	0.000	296.10	0.00	0.0000	0.0000	0.0000	0.00
91	SAGBEND	-370.18	-39.65	2.51	470.05	0.000	0.000	296.08	0.00	0.0000	0.0000	0.0000	0.00
92	SAGBEND	-376.23	-39.91	2.40	476.10	0.000	0.000	296.05	0.00	0.0000	0.0000	0.0000	0.00
93	SAGBEND	-382.27	-40.16	2.29	482.15	0.000	0.000	296.03	0.00	0.0000	0.0000	0.0000	0.00
94	SAGBEND	-388.32	-40.39	2.18	488.20	0.000	0.000	296.01	0.00	0.0000	0.0000	0.0000	0.00
95	SAGBEND	-394.36	-40.62	2.07	494.25	0.000	0.000	295.99	0.00	0.0000	0.0000	0.0000	0.00
96	SAGBEND	-400.41	-40.83	1.96	500.30	0.000	0.000	295.97	0.00	0.0000	0.0000	0.0000	0.00
97	SAGBEND	-406.46	-41.03	1.85	506.35	0.000	0.000	295.95	0.00	0.0000	0.0000	0.0000	0.00
98	SAGBEND	-412.50	-41.22	1.74	512.40	0.000	0.000	295.93	0.00	0.0000	0.0000	0.0000	0.00
99	SAGBEND	-418.55	-41.40	1.63	518.45	0.000	0.000	295.91	0.00	0.0000	0.0000	0.0000	0.00
100	SAGBEND	-424.60	-41.57	1.52	524.50	0.000	0.000	295.90	0.00	0.0000	0.0000	0.0000	0.00
101	SAGBEND	-430.65	-41.72	1.41	530.55	0.000	0.000	295.88	0.00	0.0000	0.0000	0.0000	0.00
102	SAGBEND	-436.69	-41.87	1.30	536.59	0.000	0.000	295.87	0.00	0.0000	0.0000	0.0000	0.00
103	SAGBEND	-442.74	-42.00	1.19	542.64	0.000	0.000	295.86	0.00	0.0000	0.0000	0.0000	0.00
104	SAGBEND	-448.79	-42.12	1.08	548.69	0.000	0.000	295.85	0.00	0.0000	0.0000	0.0000	0.00
105	SAGBEND	-454.84	-42.22	0.97	554.74	0.000	0.000	295.84	0.00	0.0000	0.0000	0.0000	0.00

S T A T I C P I P E C O O R D I N A T E S, F O R C E S A N D S T R A I N S

NODE NO.	PIPE SECTION	X COORD (M)	Y COORD (M)	VERT ANGLE (DEG)	PIPE LENGTH (M)	SUPPORT REACTION (KN)	SEPARA -TION (M)	AXIAL TENSION (KN)	BENDING MOMENT (KN-M)	TENSILE STRAIN (PCT)	BENDING STRAIN (PCT)	TOTAL STRAIN (PCT)	PERCNT ALLOW (PCT)
106	SAGBEND	-460.89	-42.32	0.86	560.79	0.000	0.000	295.83	0.00	0.0000	0.0000	0.0000	0.00
107	SAGBEND	-466.94	-42.41	0.75	566.84	0.000	0.000	295.82	0.00	0.0000	0.0000	0.0000	0.00
108	SAGBEND	-472.99	-42.48	0.64	572.89	0.000	0.000	295.81	0.00	0.0000	0.0000	0.0000	0.00
109	SAGBEND	-479.04	-42.54	0.53	578.94	0.000	0.000	295.81	0.00	0.0000	0.0000	0.0000	0.00
110	SAGBEND	-485.09	-42.59	0.42	584.99	0.000	0.000	295.80	0.00	0.0000	0.0000	0.0000	0.00
111	SAGBEND	-491.14	-42.63	0.30	591.04	0.000	0.000	295.80	0.00	0.0000	0.0000	0.0000	0.00
112	SAGBEND	-497.18	-42.65	0.19	597.09	0.000	0.000	295.80	0.00	0.0000	0.0000	0.0000	0.00
113	SAGBEND	-503.23	-42.67	0.08	603.14	0.052	0.000	295.79	0.00	0.0000	0.0000	0.0000	0.00
114	SEABED	-509.28	-42.67	0.01	609.19	0.404	0.000	295.79	0.00	0.0000	0.0000	0.0000	0.00
115	SEABED	-515.33	-42.67	0.00	615.24	0.544	0.000	295.79	0.00	0.0000	0.0000	0.0000	0.00
116	SEABED	-521.38	-42.67	0.00	621.29	0.567	0.000	295.79	0.00	0.0000	0.0000	0.0000	0.00
117	SEABED	-527.43	-42.67	0.00	627.34	0.570	0.000	295.79	0.00	0.0000	0.0000	0.0000	0.00
118	SEABED	-533.48	-42.67	0.00	633.39	0.571	0.000	295.79	0.00	0.0000	0.0000	0.0000	0.00
119	SEABED	-539.53	-42.67	0.00	639.44	0.571	0.000	295.79	0.00	0.0000	0.0000	0.0000	0.00
120	SEABED	-545.58	-42.67	0.00	645.49	0.571	0.000	295.79	0.00	0.0000	0.0000	0.0000	0.00
121	SEABED	-551.63	-42.67	0.00	651.54	0.571	0.000	295.79	0.00	0.0000	0.0000	0.0000	0.00
122	SEABED	-557.68	-42.67	0.00	657.59	0.571	0.000	295.79	0.00	0.0000	0.0000	0.0000	0.00
123	SEABED	-563.73	-42.67	0.00	663.64	0.571	0.000	295.79	0.00	0.0000	0.0000	0.0000	0.00
124	SEABED	-569.78	-42.67	0.00	669.69	0.571	0.000	295.79	0.00	0.0000	0.0000	0.0000	0.00
125	SEABED	-575.83	-42.67	0.00	675.74	0.571	0.000	295.79	0.00	0.0000	0.0000	0.0000	0.00

126	SEABED	-581.88	-42.67	0.00	681.79	0.571	0.000	295.79	0.00	0.0000	0.0000	0.0000	0.00
127	SEABED	-587.93	-42.67	0.00	687.84	0.571	0.000	295.79	0.00	0.0000	0.0000	0.0000	0.00
128	SEABED	-593.98	-42.67	0.00	693.89	0.571	0.000	295.79	0.00	0.0000	0.0000	0.0000	0.00
129	SEABED	-600.03	-42.67	0.00	699.94	0.571	0.000	295.79	0.00	0.0000	0.0000	0.0000	0.00
130	SEABED	-606.08	-42.67	0.00	705.99	0.571	0.000	295.79	0.00	0.0000	0.0000	0.0000	0.00
131	SEABED	-612.13	-42.67	0.00	712.04	0.571	0.000	295.79	0.00	0.0000	0.0000	0.0000	0.00
132	SEABED	-618.18	-42.67	0.00	718.09	0.571	0.000	295.79	0.00	0.0000	0.0000	0.0000	0.00
133	SEABED	-624.23	-42.67	0.00	724.14	0.571	0.000	295.79	0.00	0.0000	0.0000	0.0000	0.00
134	SEABED	-630.28	-42.67	0.00	730.19	0.571	0.000	295.79	0.00	0.0000	0.0000	0.0000	0.00
135	SEABED	-636.33	-42.67	0.00	736.24	0.571	0.000	295.79	0.00	0.0000	0.0000	0.0000	0.00
136	SEABED	-642.38	-42.67	0.00	742.29	0.571	0.000	295.79	0.00	0.0000	0.0000	0.0000	0.00
137	SEABED	-648.43	-42.67	0.00	748.34	0.571	0.000	295.79	0.00	0.0000	0.0000	0.0000	0.00
138	SEABED	-654.48	-42.67	0.00	754.39	0.571	0.000	295.79	0.00	0.0000	0.0000	0.0000	0.00
139	SEABED	-660.53	-42.67	0.00	760.44	0.571	0.000	295.79	0.00	0.0000	0.0000	0.0000	0.00
140	SEABED	-666.58	-42.67	0.00	766.49	0.571	0.000	295.79	0.00	0.0000	0.0000	0.0000	0.00
141	SEABED	-672.63	-42.67	0.00	772.53	0.571	0.000	295.79	0.00	0.0000	0.0000	0.0000	0.00
142	SEABED	-678.68	-42.67	0.00	778.58	0.571	0.000	295.79	0.00	0.0000	0.0000	0.0000	0.00
143	SEABED	-684.73	-42.67	0.00	784.63	0.571	0.000	295.79	0.00	0.0000	0.0000	0.0000	0.00
144	SEABED	-690.78	-42.67	0.00	790.68	0.571	0.000	295.79	0.00	0.0000	0.0000	0.0000	0.00
145	SEABED	-696.83	-42.67	0.00	796.73	0.570	0.000	295.79	0.00	0.0000	0.0000	0.0000	0.00
146	SEABED	-702.88	-42.67	0.00	802.78	0.567	0.000	295.79	0.00	0.0000	0.0000	0.0000	0.00
147	SEABED	-708.93	-42.67	0.00	808.83	0.548	0.000	295.79	0.00	0.0000	0.0000	0.0000	0.00
148	SEABED	-714.98	-42.67	-0.01	814.88	0.409	0.000	295.79	0.00	0.0000	0.0000	0.0000	0.00
149	SEABED	-720.18	-42.67	-0.06	820.09	0.000	0.000	295.79	0.00	0.0000	0.0000	0.0000	0.00

S T A T I C P I P E C O O R D I N A T E S, F O R C E S A N D S T R A I N S

NODE NO.	PIPE SECTION	X COORD (M)	Y COORD (M)	VERT ANGLE (DEG)	PIPE LENGTH (M)	SUPPORT REACTION (KN)	SEPARA -TION (M)	AXIAL TENSION (KN)	BENDING MOMENT (KN-M)	TENSILE STRAIN (PCT)	BENDING STRAIN (PCT)	TOTAL STRAIN (PCT)	PERCNT ALLOW (PCT)
1	LAYBARGE	96.31	6.41	1.93	0.00	9.935	0.000	0.00	2.74	0.0000	0.0021	0.0021	0.00
3	LAYBARGE	84.28	6.05	1.58	12.04	24.121	0.000	-0.73	-19.17	0.0000	-0.0143	0.0144	0.00
5	LAYBARGE	73.45	5.73	1.90	22.87	24.476	0.000	-1.39	-29.60	-0.0001	-0.0221	0.0222	0.00
7	TENSIONR	60.10	5.24	2.30	36.23	32.043	0.000	359.82	-22.64	0.0167	-0.0169	0.0337	0.00
9	LAYBARGE	51.10	4.87	2.21	45.24	0.000	0.000	359.09	27.97	0.0167	0.0209	0.0376	0.00
10	LAYBARGE	46.45	4.70	1.93	49.89	7.633	0.000	358.77	14.60	0.0167	0.0109	0.0276	0.00
12	LAYBARGE	35.36	4.31	2.63	60.99	39.836	0.000	357.73	-81.49	0.0166	-0.0609	0.0776	0.00
14	LAYBARGE	25.34	3.64	5.23	71.03	52.868	0.000	356.14	-137.03	0.0166	-0.1025	0.1191	0.00
16	LAYBARGE	19.31	3.00	6.53	77.09	0.000	0.000	355.34	-35.51	0.0165	-0.0266	0.0431	0.00
17	LAYBARGE	8.88	1.76	7.21	87.60	35.682	0.000	352.79	-49.28	0.0164	-0.0369	0.0533	0.00
19	LAYBARGE	4.88	1.24	7.47	91.63	0.000	0.000	351.83	3.07	0.0164	0.0023	0.0187	0.00
20	LAYBARGE	3.05	1.00	7.41	93.48	0.000	0.383	351.34	20.09	0.0163	0.0150	0.0314	0.00
24	STINGER	-7.58	-0.29	6.38	104.18	0.000	0.467	349.03	32.15	0.0162	0.0240	0.0403	0.00
26	STINGER	-16.66	-1.28	6.40	113.32	8.949	0.000	348.01	-47.10	0.0162	-0.0352	0.0514	0.00
29	STINGER	-26.49	-2.56	9.10	123.23	53.972	0.000	345.81	-208.49	0.0160	-0.2018	0.2179	0.00
31	STINGER	-37.20	-4.72	13.49	134.16	43.769	0.000	343.97	-171.39	0.0159	-0.1295	0.1455	0.00
33	STINGER	-40.13	-5.45	14.52	137.18	0.000	0.311	343.68	-98.68	0.0158	-0.0738	0.0898	0.00
35	SAGBEND	-46.09	-7.05	15.31	143.35	0.000	0.000	342.29	-12.19	0.0157	-0.0091	0.0250	0.00
36	SAGBEND	-51.93	-8.65	15.15	149.40	0.000	0.000	340.69	27.71	0.0156	0.0207	0.0366	0.00
37	SAGBEND	-57.77	-10.20	14.56	155.45	0.000	0.000	339.10	46.84	0.0155	0.0350	0.0508	0.00
38	SAGBEND	-63.64	-11.68	13.75	161.50	0.000	0.000	337.60	56.15	0.0154	0.0420	0.0577	0.00
39	SAGBEND	-69.53	-13.08	12.84	167.55	0.000	0.000	336.20	60.78	0.0153	0.0455	0.0611	0.00
40	SAGBEND	-75.44	-14.37	11.88	173.60	0.000	0.000	334.90	63.13	0.0152	0.0472	0.0628	0.00
41	SAGBEND	-81.37	-15.56	10.89	179.65	0.000	0.000	333.70	64.27	0.0151	0.0481	0.0636	0.00
42	SAGBEND	-87.32	-16.66	9.89	185.70	0.000	0.000	332.61	64.61	0.0150	0.0483	0.0638	0.00
43	SAGBEND	-93.29	-17.64	8.89	191.75	0.000	0.000	331.63	64.08	0.0149	0.0479	0.0633	0.00
44	SAGBEND	-99.27	-18.53	7.91	197.80	0.000	0.000	330.75	62.18	0.0149	0.0465	0.0619	0.00
45	SAGBEND	-105.27	-19.31	6.97	203.85	0.000	0.000	329.98	57.63	0.0148	0.0431	0.0584	0.00
46	SAGBEND	-111.28	-20.00	6.15	209.90	0.000	0.000	329.32	47.70	0.0148	0.0357	0.0510	0.00
47	SAGBEND	-117.30	-20.61	5.55	215.95	0.000	0.000	328.74	26.67	0.0147	0.0199	0.0352	0.00
48	SAGBEND	-121.44	-21.01	5.40	220.11	0.000	0.000	328.36	0.00	0.0147	0.0000	0.0153	0.00
49	SAGBEND	-125.40	-21.28	3.97	224.08	0.000	0.000	328.46	0.00	0.0000	0.0000	0.0000	0.00
50	SAGBEND	-129.36	-21.56	3.97	228.05	0.000	0.000	328.46	0.00	0.0000	0.0000	0.0000	0.00
51	SAGBEND	-135.40	-21.97	3.96	234.10	0.000	0.000	328.46	0.00	0.0000	0.0000	0.0000	0.00
52	SAGBEND	-141.44	-22.39	3.96	240.15	0.000	0.000	328.46	0.00	0.0000	0.0000	0.0000	0.00
53	SAGBEND	-147.47	-22.81	3.96	246.20	0.000	0.000	328.46	0.00	0.0000	0.0000	0.0000	0.00
54	SAGBEND	-153.51	-23.23	3.96	252.25	0.000	0.000	328.46	0.00	0.0000	0.0000	0.0000	0.00
55	SAGBEND	-159.54	-23.65	3.95	258.30	0.000	0.000	328.46	0.00	0.0000	0.0000	0.0000	0.00
56	SAGBEND	-165.58	-24.06	3.95	264.35	0.000	0.000	328.45	0.00	0.0000	0.0000	0.0000	0.00
57	SAGBEND	-171.61	-24.48	3.95	270.40	0.000	0.000	328.45	0.00	0.0000	0.0000	0.0000	0.00
58	SAGBEND	-177.65	-24.89	3.94	276.45	0.000	0.000	328.45	0.00	0.0000	0.0000	0.0000	0.00
59	SAGBEND	-183.68	-25.31	3.94	282.50	0.000	0.000	328.45	0.00	0.0000	0.0000	0.0000	0.00
60	SAGBEND	-189.72	-25.73	3.94	288.55	0.000	0.000	328.45	0.00	0.0000	0.0000	0.0000	0.00

S T A T I C P I P E C O O R D I N A T E S, F O R C E S A N D S T R A I N S

NODE NO.	PIPE SECTION	X COORD (M)	Y COORD (M)	VERT ANGLE (DEG)	PIPE LENGTH (M)	SUPPORT REACTION (KN)	SEPARA -TION (M)	AXIAL TENSION (KN)	BENDING MOMENT (KN-M)	TENSILE STRAIN (PCT)	BENDING STRAIN (PCT)	TOTAL STRAIN (PCT)	PERCNT ALLOW (PCT)
61	SAGBEND	-195.76	-26.14	3.94	294.60	0.000	0.000	328.45	0.00	0.0000	0.0000	0.0000	0.00
62	SAGBEND	-201.79	-26.56	3.93	300.65	0.000	0.000	328.45	0.00	0.0000	0.0000	0.0000	0.00
63	SAGBEND	-207.83	-26.97	3.93	306.70	0.000	0.000	328.45	0.00	0.0000	0.0000	0.0000	0.00
64	SAGBEND	-213.86	-27.39	3.93	312.75	0.000	0.000	328.45	0.00	0.0000	0.0000	0.0000	0.00
65	SAGBEND	-219.90	-27.80	3.93	318.80	0.000	0.000	328.45	0.00	0.0000	0.0000	0.0000	0.00
66	SAGBEND	-225.93	-28.22	3.92	324.85	0.000	0.000	328.44	0.00	0.0000	0.0000	0.0000	0.00
67	SAGBEND	-231.97	-28.63	3.92	330.90	0.000	0.000	328.44	0.00	0.0000	0.0000	0.0000	0.00
68	SAGBEND	-238.01	-29.04	3.92	336.95	0.000	0.000	328.44	0.00	0.0000	0.0000	0.0000	0.00
69	SAGBEND	-244.04	-29.46	3.91	343.00	0.000	0.000	328.44	0.00	0.0000	0.0000	0.0000	0.00
70	SAGBEND	-250.08	-29.87	3.91	349.05	0.000	0.000	328.44	0.00	0.0000	0.0000	0.0000	0.00
71	SAGBEND	-256.11	-30.28	3.91	355.10	0.000	0.000	328.44	0.00	0.0000	0.0000	0.0000	0.00
72	SAGBEND	-262.15	-30.69	3.91	361.15	0.000	0.000	328.44	0.00	0.0000	0.0000	0.0000	0.00
73	SAGBEND	-268.19	-31.10	3.90	367.20	0.000	0.000	328.44	0.00	0.0000	0.0000	0.0000	0.00
74	SAGBEND	-274.22	-31.52	3.90	373.25	0.000	0.000	328.44	0.00	0.0000	0.0000	0.0000	0.00
75	SAGBEND	-280.26	-31.93	3.90	379.30	0.000	0.000	328.43	0.00	0.0000	0.0000	0.0000	0.00
76	SAGBEND	-286.29	-32.34	3.89	385.35	0.000	0.000	328.43	0.00	0.0000	0.0000	0.0000	0.00
77	SAGBEND	-292.33	-32.75	3.89	391.40	0.000	0.000	328.43	0.00	0.0000	0.0000	0.0000	0.00
78	SAGBEND	-298.37	-33.16	3.89	397.45	0.000	0.000	328.43	0.00	0.0000	0.0000	0.0000	0.00
79	SAGBEND	-304.40	-33.57	3.89	403.50	0.000	0.000	328.43	0.00	0.0000	0.0000	0.0000	0.00
80	SAGBEND	-310.44	-33.98	3.88	409.55	0.000	0.000	328.43	0.00	0.0000	0.0000	0.0000	0.00
81	SAGBEND	-316.47	-34.39	3.88	415.60	0.000	0.000	328.43	0.00	0.0000	0.0000	0.0000	0.00
82	SAGBEND	-320.97	-34.70	3.88	420.11	0.000	0.000	328.43	0.00	0.0000	0.0000	0.0000	0.00
83	SAGBEND	-324.76	-34.95	3.82	423.91	0.000	0.000	328.40	0.00	0.0000	0.0000	0.0000	0.00
84	SAGBEND	-328.55	-35.20	3.75	427.70	0.000	0.000	328.38	0.00	0.0000	0.0000	0.0000	0.00
85	SAGBEND	-334.58	-35.59	3.66	433.75	0.000	0.000	328.34	0.00	0.0000	0.0000	0.0000	0.00
86	SAGBEND	-340.62	-35.97	3.56	439.80	0.000	0.000	328.31	0.00	0.0000	0.0000	0.0000	0.00
87	SAGBEND	-346.66	-36.34	3.46	445.85	0.000	0.000	328.27	0.00	0.0000	0.0000	0.0000	0.00
88	SAGBEND	-352.70	-36.70	3.36	451.90	0.000	0.000	328.24	0.00	0.0000	0.0000	0.0000	0.00
89	SAGBEND	-358.74	-37.05	3.26	457.95	0.000	0.000	328.20	0.00	0.0000	0.0000	0.0000	0.00
90	SAGBEND	-364.78	-37.39	3.16	464.00	0.000	0.000	328.17	0.00	0.0000	0.0000	0.0000	0.00
91	SAGBEND	-370.82	-37.72	3.06	470.05	0.000	0.000	328.14	0.00	0.0000	0.0000	0.0000	0.00
92	SAGBEND	-376.86	-38.03	2.96	476.10	0.000	0.000	328.11	0.00	0.0000	0.0000	0.0000	0.00
93	SAGBEND	-382.90	-38.34	2.86	482.15	0.000	0.000	328.08	0.00	0.0000	0.0000	0.0000	0.00
94	SAGBEND	-388.95	-38.64	2.76	488.20	0.000	0.000	328.06	0.00	0.0000	0.0000	0.0000	0.00
95	SAGBEND	-394.99	-38.92	2.66	494.25	0.000	0.000	328.03	0.00	0.0000	0.0000	0.0000	0.00
96	SAGBEND	-401.03	-39.20	2.56	500.30	0.000	0.000	328.00	0.00	0.0000	0.0000	0.0000	0.00
97	SAGBEND	-407.08	-39.46	2.46	506.35	0.000	0.000	327.98	0.00	0.0000	0.0000	0.0000	0.00
98	SAGBEND	-413.12	-39.72	2.36	512.40	0.000	0.000	327.95	0.00	0.0000	0.0000	0.0000	0.00
99	SAGBEND	-419.17	-39.96	2.26	518.45	0.000	0.000	327.93	0.00	0.0000	0.0000	0.0000	0.00
100	SAGBEND	-425.21	-40.20	2.16	524.50	0.000	0.000	327.91	0.00	0.0000	0.0000	0.0000	0.00
101	SAGBEND	-431.26	-40.42	2.06	530.55	0.000	0.000	327.89	0.00	0.0000	0.0000	0.0000	0.00
102	SAGBEND	-437.31	-40.63	1.96	536.60	0.000	0.000	327.87	0.00	0.0000	0.0000	0.0000	0.00
103	SAGBEND	-443.35	-40.83	1.86	542.65	0.000	0.000	327.85	0.00	0.0000	0.0000	0.0000	0.00
104	SAGBEND	-449.40	-41.03	1.76	548.70	0.000	0.000	327.83	0.00	0.0000	0.0000	0.0000	0.00
105	SAGBEND	-455.45	-41.21	1.66	554.75	0.000	0.000	327.81	0.00	0.0000	0.0000	0.0000	0.00

S T A T I C P I P E C O O R D I N A T E S, F O R C E S A N D S T R A I N S

NODE NO.	PIPE SECTION	X COORD (M)	Y COORD (M)	VERT ANGLE (DEG)	PIPE LENGTH (M)	SUPPORT REACTION (KN)	SEPARA -TION (M)	AXIAL TENSION (KN)	BENDING MOMENT (KN-M)	TENSILE STRAIN (PCT)	BENDING STRAIN (PCT)	TOTAL STRAIN (PCT)	PERCNT ALLOW (PCT)
106	SAGBEND	-461.49	-41.38	1.56	560.80	0.000	0.000	327.80	0.00	0.0000	0.0000	0.0000	0.00
107	SAGBEND	-467.54	-41.54	1.46	566.85	0.000	0.000	327.78	0.00	0.0000	0.0000	0.0000	0.00
108	SAGBEND	-473.59	-41.69	1.36	572.90	0.000	0.000	327.77	0.00	0.0000	0.0000	0.0000	0.00
109	SAGBEND	-479.64	-41.83	1.26	578.95	0.000	0.000	327.75	0.00	0.0000	0.0000	0.0000	0.00
110	SAGBEND	-485.69	-41.95	1.17	585.00	0.000	0.000	327.74	0.00	0.0000	0.0000	0.0000	0.00
111	SAGBEND	-491.74	-42.07	1.07	591.05	0.000	0.000	327.73	0.00	0.0000	0.0000	0.0000	0.00
112	SAGBEND	-497.78	-42.18	0.97	597.10	0.000	0.000	327.72	0.00	0.0000	0.0000	0.0000	0.00
113	SAGBEND	-503.83	-42.28	0.87	603.15	0.000	0.000	327.71	0.00	0.0000	0.0000	0.0000	0.00
114	SAGBEND	-509.88	-42.36	0.77	609.20	0.000	0.000	327.70	0.00	0.0000	0.0000	0.0000	0.00
115	SAGBEND	-515.93	-42.44	0.67	615.25	0.000	0.000	327.70	0.00	0.0000	0.0000	0.0000	0.00
116	SAGBEND	-521.98	-42.50	0.57	621.30	0.000	0.000	327.69	0.00	0.0000	0.0000	0.0000	0.00
117	SAGBEND	-528.03	-42.56	0.47	627.35	0.000	0.000	327.69	0.00	0.0000	0.0000	0.0000	0.00
118	SAGBEND	-534.08	-42.60	0.37	633.40	0.000	0.000	327.68	0.00	0.0000	0.0000	0.0000	0.00
119	SAGBEND	-540.13	-42.63	0.27	639.45	0.000	0.000	327.68	0.00	0.0000	0.0000	0.0000	0.00
120	SAGBEND	-546.18	-42.66	0.17	645.50	0.000	0.000	327.68	0.00	0.0000	0.0000	0.0000	0.00
121	SAGBEND	-552.23	-42.67	0.07	651.55	0.076	0.000	327.67	0.00	0.0000	0.0000	0.0000	0.00

122	SEABED	-558.28	-42.67	0.01	657.60	0.425	0.000	327.67	0.00	0.0000	0.0000	0.0000	0.00
123	SEABED	-564.33	-42.67	0.00	663.65	0.545	0.000	327.67	0.00	0.0000	0.0000	0.0000	0.00
124	SEABED	-570.38	-42.67	0.00	669.70	0.566	0.000	327.67	0.00	0.0000	0.0000	0.0000	0.00
125	SEABED	-576.43	-42.67	0.00	675.75	0.570	0.000	327.67	0.00	0.0000	0.0000	0.0000	0.00
126	SEABED	-582.48	-42.67	0.00	681.80	0.571	0.000	327.67	0.00	0.0000	0.0000	0.0000	0.00
127	SEABED	-588.53	-42.67	0.00	687.85	0.571	0.000	327.67	0.00	0.0000	0.0000	0.0000	0.00
128	SEABED	-594.58	-42.67	0.00	693.90	0.571	0.000	327.67	0.00	0.0000	0.0000	0.0000	0.00
129	SEABED	-600.63	-42.67	0.00	699.95	0.571	0.000	327.67	0.00	0.0000	0.0000	0.0000	0.00
130	SEABED	-606.68	-42.67	0.00	706.00	0.571	0.000	327.67	0.00	0.0000	0.0000	0.0000	0.00
131	SEABED	-612.73	-42.67	0.00	712.05	0.571	0.000	327.67	0.00	0.0000	0.0000	0.0000	0.00
132	SEABED	-618.78	-42.67	0.00	718.10	0.571	0.000	327.67	0.00	0.0000	0.0000	0.0000	0.00
133	SEABED	-624.83	-42.67	0.00	724.15	0.571	0.000	327.67	0.00	0.0000	0.0000	0.0000	0.00
134	SEABED	-630.88	-42.67	0.00	730.20	0.571	0.000	327.67	0.00	0.0000	0.0000	0.0000	0.00
135	SEABED	-636.93	-42.67	0.00	736.25	0.571	0.000	327.67	0.00	0.0000	0.0000	0.0000	0.00
136	SEABED	-642.98	-42.67	0.00	742.30	0.571	0.000	327.67	0.00	0.0000	0.0000	0.0000	0.00
137	SEABED	-649.03	-42.67	0.00	748.35	0.571	0.000	327.67	0.00	0.0000	0.0000	0.0000	0.00
138	SEABED	-655.08	-42.67	0.00	754.40	0.571	0.000	327.67	0.00	0.0000	0.0000	0.0000	0.00
139	SEABED	-661.13	-42.67	0.00	760.45	0.571	0.000	327.67	0.00	0.0000	0.0000	0.0000	0.00
140	SEABED	-667.18	-42.67	0.00	766.50	0.571	0.000	327.67	0.00	0.0000	0.0000	0.0000	0.00
141	SEABED	-673.23	-42.67	0.00	772.55	0.571	0.000	327.67	0.00	0.0000	0.0000	0.0000	0.00
142	SEABED	-679.28	-42.67	0.00	778.60	0.571	0.000	327.67	0.00	0.0000	0.0000	0.0000	0.00
143	SEABED	-685.33	-42.67	0.00	784.65	0.571	0.000	327.67	0.00	0.0000	0.0000	0.0000	0.00
144	SEABED	-691.38	-42.67	0.00	790.70	0.571	0.000	327.67	0.00	0.0000	0.0000	0.0000	0.00
145	SEABED	-697.43	-42.67	0.00	796.75	0.570	0.000	327.67	0.00	0.0000	0.0000	0.0000	0.00
146	SEABED	-703.48	-42.67	0.00	802.80	0.566	0.000	327.67	0.00	0.0000	0.0000	0.0000	0.00
147	SEABED	-709.53	-42.67	0.00	808.85	0.544	0.000	327.67	0.00	0.0000	0.0000	0.0000	0.00
148	SEABED	-715.58	-42.67	-0.01	814.90	0.401	0.000	327.67	0.00	0.0000	0.0000	0.0000	0.00
149	SEABED	-720.79	-42.67	-0.06	820.11	0.000	0.000	327.67	0.00	0.0000	0.0000	0.0000	0.00

S T A T I C P I P E C O O R D I N A T E S, F O R C E S A N D S T R A I N S

NODE NO.	PIPE SECTION	X COORD (M)	Y COORD (M)	VERT ANGLE (DEG)	PIPE LENGTH (M)	SUPPORT REACTION (KN)	SEPARA -TION (M)	AXIAL TENSION (KN)	BENDING MOMENT (KN-M)	TENSILE STRAIN (PCT)	BENDING STRAIN (PCT)	TOTAL STRAIN (PCT)	PERCNT ALLOW (PCT)
1	LAYBARGE	96.31	6.41	1.93	0.00	9.933	0.000	0.00	2.74	0.0000	0.0021	0.0021	0.00
3	LAYBARGE	84.28	6.05	1.58	12.04	24.138	0.000	-0.73	-19.19	0.0000	-0.0144	0.0144	0.00
5	LAYBARGE	73.45	5.73	1.90	22.87	24.420	0.000	-1.39	-29.49	-0.0001	-0.0221	0.0221	0.00
7	TENSIONR	60.10	5.24	2.30	36.23	32.234	0.000	359.81	-22.93	0.0167	-0.0171	0.0339	0.00
9	LAYBARGE	51.10	4.87	2.21	45.24	0.000	0.000	359.08	28.89	0.0167	0.0216	0.0383	0.00
10	LAYBARGE	46.45	4.70	1.91	49.89	6.467	0.000	358.76	16.26	0.0167	0.0122	0.0288	0.00
12	LAYBARGE	35.36	4.31	2.70	60.99	45.572	0.000	357.67	-86.23	0.0166	-0.0645	0.0811	0.00
14	LAYBARGE	25.34	3.64	4.96	71.03	36.589	0.000	356.36	-102.87	0.0166	-0.0769	0.0935	0.00
16	LAYBARGE	19.31	3.05	6.09	77.09	0.000	0.000	355.40	-50.84	0.0165	-0.0380	0.0546	0.00
17	LAYBARGE	8.88	1.76	8.74	87.60	73.806	0.000	351.87	-191.22	0.0164	-0.1526	0.1690	0.00
19	LAYBARGE	4.90	1.08	10.28	91.63	0.000	0.000	351.31	-96.99	0.0163	-0.0725	0.0889	0.00
20	LAYBARGE	3.09	0.75	10.66	93.48	0.000	0.129	350.75	-65.19	0.0163	-0.0488	0.0651	0.00
24	STINGER	-7.58	-1.35	11.35	104.35	0.000	0.155	347.99	-18.34	0.0162	-0.0137	0.0299	0.00
26	STINGER	-16.53	-3.22	12.74	113.50	33.762	0.000	345.77	-126.07	0.0160	-0.0943	0.1104	0.00
29	STINGER	-26.13	-5.63	15.52	123.39	25.284	0.000	343.30	-136.56	0.0158	-0.1022	0.1181	0.00
31	STINGER	-36.56	-8.88	19.25	134.32	52.495	0.000	339.68	-187.70	0.0156	-0.1473	0.1631	0.00
33	STINGER	-39.40	-9.90	20.39	137.34	0.000	0.315	339.18	-110.74	0.0155	-0.0828	0.0986	0.00
35	SAGBEND	-45.02	-12.06	21.31	143.35	0.000	0.000	337.29	-20.49	0.0154	-0.0153	0.0310	0.00
36	SAGBEND	-50.65	-14.26	21.25	149.40	0.000	0.000	335.09	23.03	0.0152	0.0172	0.0328	0.00
37	SAGBEND	-56.30	-16.43	20.71	155.45	0.000	0.000	332.89	44.09	0.0150	0.0330	0.0484	0.00
38	SAGBEND	-61.97	-18.53	19.94	161.50	0.000	0.000	330.77	54.52	0.0149	0.0408	0.0561	0.00
39	SAGBEND	-67.68	-20.55	19.05	167.55	0.000	0.000	328.74	59.89	0.0147	0.0448	0.0601	0.00
40	SAGBEND	-73.41	-22.48	18.09	173.60	0.000	0.000	326.81	62.84	0.0146	0.0470	0.0622	0.00
41	SAGBEND	-79.18	-24.30	17.10	179.65	0.000	0.000	324.97	64.62	0.0145	0.0483	0.0634	0.00
42	SAGBEND	-84.98	-26.03	16.09	185.70	0.000	0.000	323.24	65.82	0.0143	0.0492	0.0642	0.00
43	SAGBEND	-90.80	-27.66	15.06	191.75	0.000	0.000	321.62	66.73	0.0142	0.0499	0.0648	0.00
44	SAGBEND	-96.66	-29.18	14.02	197.80	0.000	0.000	320.10	67.47	0.0141	0.0505	0.0653	0.00
45	SAGBEND	-102.54	-30.59	12.97	203.85	0.000	0.000	318.69	68.11	0.0140	0.0509	0.0657	0.00
46	SAGBEND	-108.45	-31.89	11.91	209.90	0.000	0.000	317.38	68.66	0.0139	0.0514	0.0661	0.00
47	SAGBEND	-114.38	-33.09	10.84	215.95	0.000	0.000	316.19	69.13	0.0138	0.0517	0.0664	0.00
48	SAGBEND	-120.33	-34.17	9.77	222.00	0.000	0.000	315.11	69.48	0.0137	0.0520	0.0666	0.00
49	SAGBEND	-126.30	-35.14	8.69	228.05	0.000	0.000	314.14	69.66	0.0137	0.0521	0.0667	0.00
50	SAGBEND	-132.29	-35.99	7.61	234.10	0.000	0.000	313.28	69.52	0.0136	0.0520	0.0665	0.00
51	SAGBEND	-138.30	-36.74	6.53	240.15	0.000	0.000	312.54	68.78	0.0135	0.0514	0.0660	0.00
52	SAGBEND	-144.31	-37.37	5.48	246.20	0.000	0.000	311.92	66.87	0.0135	0.0500	0.0645	0.00
53	SAGBEND	-150.34	-37.90	4.47	252.25	0.000	0.000	311.40	62.64	0.0134	0.0469	0.0613	0.00
54	SAGBEND	-156.38	-38.32	3.56	258.30	0.000	0.000	311.01	53.72	0.0134	0.0402	0.0546	0.00
55	SAGBEND	-162.42	-38.65	2.85	264.35	0.000	0.000	310.71	35.28	0.0134	0.0264	0.0408	0.00
56	SAGBEND	-168.17	-38.92	2.56	270.11	0.000	0.000	310.47	0.00	0.0134	0.0000	0.0145	0.00
57	SAGBEND	-174.51	-39.03	1.00	276.45	0.000	0.000	310.58	0.00	0.0000	0.0000	0.0000	0.00
58	SAGBEND	-180.56	-39.14	1.00	282.50	0.000	0.000	310.58	0.00	0.0000	0.0000	0.0000	0.00
59	SAGBEND	-186.61	-39.24	1.00	288.55	0.000	0.000	310.58	0.00	0.0000	0.0000	0.0000	0.00
60	SAGBEND	-192.66	-39.35	0.99	294.60	0.000	0.000	310.58	0.00	0.0000	0.0000	0.0000	0.00

S T A T I C P I P E C O O R D I N A T E S, F O R C E S A N D S T R A I N S

NODE NO.	PIPE SECTION	X COORD (M)	Y COORD (M)	VERT ANGLE (DEG)	PIPE LENGTH (M)	SUPPORT REACTION (KN)	SEPARA -TION (M)	AXIAL TENSION (KN)	BENDING MOMENT (KN-M)	TENSILE STRAIN (PCT)	BENDING STRAIN (PCT)	TOTAL STRAIN (PCT)	PERCNT ALLOW (PCT)
61	SAGBEND	-198.70	-39.45	0.99	300.65	0.000	0.000	310.58	0.00	0.0000	0.0000	0.0000	0.00
62	SAGBEND	-204.75	-39.56	0.99	306.70	0.000	0.000	310.58	0.00	0.0000	0.0000	0.0000	0.00
63	SAGBEND	-210.80	-39.66	0.98	312.75	0.000	0.000	310.58	0.00	0.0000	0.0000	0.0000	0.00
64	SAGBEND	-216.85	-39.77	0.98	318.80	0.000	0.000	310.58	0.00	0.0000	0.0000	0.0000	0.00
65	SAGBEND	-222.90	-39.87	0.98	324.85	0.000	0.000	310.58	0.00	0.0000	0.0000	0.0000	0.00
66	SAGBEND	-228.95	-39.97	0.97	330.90	0.000	0.000	310.58	0.00	0.0000	0.0000	0.0000	0.00
67	SAGBEND	-235.00	-40.07	0.97	336.95	0.000	0.000	310.58	0.00	0.0000	0.0000	0.0000	0.00
68	SAGBEND	-241.04	-40.18	0.97	343.00	0.000	0.000	310.58	0.00	0.0000	0.0000	0.0000	0.00
69	SAGBEND	-247.09	-40.28	0.97	349.05	0.000	0.000	310.58	0.00	0.0000	0.0000	0.0000	0.00
70	SAGBEND	-253.14	-40.38	0.96	355.10	0.000	0.000	310.58	0.00	0.0000	0.0000	0.0000	0.00
71	SAGBEND	-259.19	-40.48	0.96	361.15	0.000	0.000	310.58	0.00	0.0000	0.0000	0.0000	0.00
72	SAGBEND	-265.24	-40.58	0.96	367.20	0.000	0.000	310.58	0.00	0.0000	0.0000	0.0000	0.00
73	SAGBEND	-271.29	-40.68	0.95	373.25	0.000	0.000	310.58	0.00	0.0000	0.0000	0.0000	0.00
74	SAGBEND	-277.34	-40.79	0.95	379.30	0.000	0.000	310.58	0.00	0.0000	0.0000	0.0000	0.00
75	SAGBEND	-283.39	-40.89	0.95	385.35	0.000	0.000	310.58	0.00	0.0000	0.0000	0.0000	0.00
76	SAGBEND	-289.43	-40.99	0.95	391.40	0.000	0.000	310.58	0.00	0.0000	0.0000	0.0000	0.00
77	SAGBEND	-295.48	-41.09	0.94	397.45	0.000	0.000	310.58	0.00	0.0000	0.0000	0.0000	0.00
78	SAGBEND	-301.53	-41.18	0.94	403.50	0.000	0.000	310.58	0.00	0.0000	0.0000	0.0000	0.00
79	SAGBEND	-307.58	-41.28	0.94	409.55	0.000	0.000	310.58	0.00	0.0000	0.0000	0.0000	0.00
80	SAGBEND	-313.63	-41.38	0.93	415.60	0.000	0.000	310.58	0.00	0.0000	0.0000	0.0000	0.00
81	SAGBEND	-319.68	-41.48	0.93	421.64	0.000	0.000	310.58	0.00	0.0000	0.0000	0.0000	0.00
82	SAGBEND	-325.73	-41.58	0.93	427.69	0.000	0.000	310.58	0.00	0.0000	0.0000	0.0000	0.00
83	SAGBEND	-331.78	-41.68	0.93	433.74	0.000	0.000	310.57	0.00	0.0000	0.0000	0.0000	0.00
84	SAGBEND	-337.83	-41.77	0.92	439.79	0.000	0.000	310.57	0.00	0.0000	0.0000	0.0000	0.00
85	SAGBEND	-343.87	-41.87	0.92	445.84	0.000	0.000	310.57	0.00	0.0000	0.0000	0.0000	0.00
86	SAGBEND	-349.92	-41.97	0.92	451.89	0.000	0.000	310.57	0.00	0.0000	0.0000	0.0000	0.00
87	SAGBEND	-355.97	-42.07	0.91	457.94	0.000	0.000	310.57	0.00	0.0000	0.0000	0.0000	0.00
88	SAGBEND	-362.02	-42.16	0.91	463.99	0.000	0.000	310.57	0.00	0.0000	0.0000	0.0000	0.00
89	SAGBEND	-365.07	-42.21	0.91	467.05	0.000	0.000	310.57	0.00	0.0000	0.0000	0.0000	0.00
90	SAGBEND	-368.13	-42.26	0.91	470.10	0.000	0.000	310.57	0.00	0.0000	0.0000	0.0000	0.00
91	SAGBEND	-374.12	-42.35	0.80	476.09	0.000	0.000	310.56	0.00	0.0000	0.0000	0.0000	0.00
92	SAGBEND	-380.17	-42.43	0.70	482.14	0.000	0.000	310.56	0.00	0.0000	0.0000	0.0000	0.00
93	SAGBEND	-386.22	-42.50	0.59	488.19	0.000	0.000	310.55	0.00	0.0000	0.0000	0.0000	0.00
94	SAGBEND	-392.27	-42.55	0.49	494.24	0.000	0.000	310.55	0.00	0.0000	0.0000	0.0000	0.00
95	SAGBEND	-398.31	-42.60	0.38	500.29	0.000	0.000	310.54	0.00	0.0000	0.0000	0.0000	0.00
96	SAGBEND	-404.36	-42.63	0.28	506.34	0.000	0.000	310.54	0.00	0.0000	0.0000	0.0000	0.00
97	SAGBEND	-410.41	-42.66	0.17	512.39	0.000	0.000	310.54	0.00	0.0000	0.0000	0.0000	0.00
98	SAGBEND	-416.46	-42.67	0.07	518.44	0.085	0.000	310.53	0.00	0.0000	0.0000	0.0000	0.00
99	SEABED	-422.51	-42.67	0.01	524.49	0.437	0.000	310.53	0.00	0.0000	0.0000	0.0000	0.00
100	SEABED	-428.56	-42.67	0.00	530.54	0.549	0.000	310.53	0.00	0.0000	0.0000	0.0000	0.00
101	SEABED	-434.61	-42.67	0.00	536.58	0.567	0.000	310.53	0.00	0.0000	0.0000	0.0000	0.00
102	SEABED	-440.66	-42.67	0.00	542.63	0.570	0.000	310.53	0.00	0.0000	0.0000	0.0000	0.00
103	SEABED	-446.71	-42.67	0.00	548.68	0.571	0.000	310.53	0.00	0.0000	0.0000	0.0000	0.00
104	SEABED	-452.76	-42.67	0.00	554.73	0.571	0.000	310.53	0.00	0.0000	0.0000	0.0000	0.00

S T A T I C P I P E C O O R D I N A T E S, F O R C E S A N D S T R A I N S

NODE NO.	PIPE SECTION	X COORD (M)	Y COORD (M)	VERT ANGLE (DEG)	PIPE LENGTH (M)	SUPPORT REACTION (KN)	SEPARA -TION (M)	AXIAL TENSION (KN)	BENDING MOMENT (KN-M)	TENSILE STRAIN (PCT)	BENDING STRAIN (PCT)	TOTAL STRAIN (PCT)	PERCNT ALLOW (PCT)
105	SEABED	-458.81	-42.67	0.00	560.78	0.571	0.000	310.53	0.00	0.0000	0.0000	0.0000	0.00
106	SEABED	-464.86	-42.67	0.00	566.83	0.571	0.000	310.53	0.00	0.0000	0.0000	0.0000	0.00
107	SEABED	-470.91	-42.67	0.00	572.88	0.571	0.000	310.53	0.00	0.0000	0.0000	0.0000	0.00
108	SEABED	-476.96	-42.67	0.00	578.93	0.571	0.000	310.53	0.00	0.0000	0.0000	0.0000	0.00
109	SEABED	-483.01	-42.67	0.00	584.98	0.571	0.000	310.53	0.00	0.0000	0.0000	0.0000	0.00
110	SEABED	-489.05	-42.67	0.00	591.03	0.571	0.000	310.53	0.00	0.0000	0.0000	0.0000	0.00
111	SEABED	-495.10	-42.67	0.00	597.08	0.571	0.000	310.53	0.00	0.0000	0.0000	0.0000	0.00
112	SEABED	-501.15	-42.67	0.00	603.13	0.571	0.000	310.53	0.00	0.0000	0.0000	0.0000	0.00
113	SEABED	-507.20	-42.67	0.00	609.18	0.571	0.000	310.53	0.00	0.0000	0.0000	0.0000	0.00
114	SEABED	-513.25	-42.67	0.00	615.23	0.571	0.000	310.53	0.00	0.0000	0.0000	0.0000	0.00
115	SEABED	-519.30	-42.67	0.00	621.28	0.571	0.000	310.53	0.00	0.0000	0.0000	0.0000	0.00

116	SEABED	-525.35	-42.67	0.00	627.33	0.571	0.000	310.53	0.00	0.0000	0.0000	0.0000	0.00
117	SEABED	-531.40	-42.67	0.00	633.37	0.571	0.000	310.53	0.00	0.0000	0.0000	0.0000	0.00
118	SEABED	-537.45	-42.67	0.00	639.42	0.571	0.000	310.53	0.00	0.0000	0.0000	0.0000	0.00
119	SEABED	-543.50	-42.67	0.00	645.47	0.571	0.000	310.53	0.00	0.0000	0.0000	0.0000	0.00
120	SEABED	-549.55	-42.67	0.00	651.52	0.571	0.000	310.53	0.00	0.0000	0.0000	0.0000	0.00
121	SEABED	-555.60	-42.67	0.00	657.57	0.571	0.000	310.53	0.00	0.0000	0.0000	0.0000	0.00
122	SEABED	-561.65	-42.67	0.00	663.62	0.571	0.000	310.53	0.00	0.0000	0.0000	0.0000	0.00
123	SEABED	-567.70	-42.67	0.00	669.67	0.571	0.000	310.53	0.00	0.0000	0.0000	0.0000	0.00
124	SEABED	-573.75	-42.67	0.00	675.72	0.571	0.000	310.53	0.00	0.0000	0.0000	0.0000	0.00
125	SEABED	-579.80	-42.67	0.00	681.77	0.571	0.000	310.53	0.00	0.0000	0.0000	0.0000	0.00
126	SEABED	-585.84	-42.67	0.00	687.82	0.571	0.000	310.53	0.00	0.0000	0.0000	0.0000	0.00
127	SEABED	-591.89	-42.67	0.00	693.87	0.571	0.000	310.53	0.00	0.0000	0.0000	0.0000	0.00
128	SEABED	-597.94	-42.67	0.00	699.92	0.571	0.000	310.53	0.00	0.0000	0.0000	0.0000	0.00
129	SEABED	-603.99	-42.67	0.00	705.97	0.571	0.000	310.53	0.00	0.0000	0.0000	0.0000	0.00
130	SEABED	-610.04	-42.67	0.00	712.02	0.571	0.000	310.53	0.00	0.0000	0.0000	0.0000	0.00
131	SEABED	-616.09	-42.67	0.00	718.07	0.571	0.000	310.53	0.00	0.0000	0.0000	0.0000	0.00
132	SEABED	-622.14	-42.67	0.00	724.12	0.571	0.000	310.53	0.00	0.0000	0.0000	0.0000	0.00
133	SEABED	-628.19	-42.67	0.00	730.16	0.571	0.000	310.53	0.00	0.0000	0.0000	0.0000	0.00
134	SEABED	-634.24	-42.67	0.00	736.21	0.571	0.000	310.53	0.00	0.0000	0.0000	0.0000	0.00
135	SEABED	-640.29	-42.67	0.00	742.26	0.571	0.000	310.53	0.00	0.0000	0.0000	0.0000	0.00
136	SEABED	-646.34	-42.67	0.00	748.31	0.571	0.000	310.53	0.00	0.0000	0.0000	0.0000	0.00
137	SEABED	-652.39	-42.67	0.00	754.36	0.571	0.000	310.53	0.00	0.0000	0.0000	0.0000	0.00
138	SEABED	-658.44	-42.67	0.00	760.41	0.571	0.000	310.53	0.00	0.0000	0.0000	0.0000	0.00
139	SEABED	-664.49	-42.67	0.00	766.46	0.571	0.000	310.53	0.00	0.0000	0.0000	0.0000	0.00
140	SEABED	-670.54	-42.67	0.00	772.51	0.571	0.000	310.53	0.00	0.0000	0.0000	0.0000	0.00
141	SEABED	-676.59	-42.67	0.00	778.56	0.571	0.000	310.53	0.00	0.0000	0.0000	0.0000	0.00
142	SEABED	-682.64	-42.67	0.00	784.61	0.571	0.000	310.53	0.00	0.0000	0.0000	0.0000	0.00
143	SEABED	-688.68	-42.67	0.00	790.66	0.571	0.000	310.53	0.00	0.0000	0.0000	0.0000	0.00
144	SEABED	-694.73	-42.67	0.00	796.71	0.571	0.000	310.53	0.00	0.0000	0.0000	0.0000	0.00
145	SEABED	-700.78	-42.67	0.00	802.76	0.571	0.000	310.53	0.00	0.0000	0.0000	0.0000	0.00
146	SEABED	-706.83	-42.67	0.00	808.81	0.571	0.000	310.53	0.00	0.0000	0.0000	0.0000	0.00
147	SEABED	-712.88	-42.67	0.00	814.86	0.571	0.000	310.53	0.00	0.0000	0.0000	0.0000	0.00
148	SEABED	-718.93	-42.67	0.00	820.91	0.571	0.000	310.53	0.00	0.0000	0.0000	0.0000	0.00
149	SEABED	-724.98	-42.67	0.00	826.95	0.571	0.000	310.53	0.00	0.0000	0.0000	0.0000	0.00

S T A T I C P I P E C O O R D I N A T E S, F O R C E S A N D S T R A I N S

NODE NO.	PIPE SECTION	X COORD (M)	Y COORD (M)	VERT ANGLE (DEG)	PIPE LENGTH (M)	SUPPORT REACTION (KN)	SEPARA -TION (M)	AXIAL TENSION (KN)	BENDING MOMENT (KN-M)	TENSILE STRAIN (PCT)	BENDING STRAIN (PCT)	TOTAL STRAIN (PCT)	PERCNT ALLOW (PCT)
150	SEABED	-731.03	-42.67	0.00	833.00	0.571	0.000	310.53	0.00	0.0000	0.0000	0.0000	0.00
151	SEABED	-737.08	-42.67	0.00	839.05	0.571	0.000	310.53	0.00	0.0000	0.0000	0.0000	0.00
152	SEABED	-743.13	-42.67	0.00	845.10	0.570	0.000	310.53	0.00	0.0000	0.0000	0.0000	0.00
153	SEABED	-749.18	-42.67	0.00	851.15	0.568	0.000	310.53	0.00	0.0000	0.0000	0.0000	0.00
154	SEABED	-755.23	-42.67	0.00	857.20	0.555	0.000	310.53	0.00	0.0000	0.0000	0.0000	0.00
155	SEABED	-761.28	-42.67	-0.01	863.25	0.393	0.000	310.53	0.00	0.0000	0.0000	0.0000	0.00
156	SEABED	-764.68	-42.67	-0.02	866.65	0.196	0.000	310.53	0.00	0.0000	0.0000	0.0000	0.00
157	SEABED	-768.08	-42.67	-0.06	870.06	0.000	0.000	310.53	0.00	0.0000	0.0000	0.0000	0.00

S T A T I C P I P E C O O R D I N A T E S, F O R C E S A N D S T R A I N S

NODE NO.	PIPE SECTION	X COORD (M)	Y COORD (M)	VERT ANGLE (DEG)	PIPE LENGTH (M)	SUPPORT REACTION (KN)	SEPARA -TION (M)	AXIAL TENSION (KN)	BENDING MOMENT (KN-M)	TENSILE STRAIN (PCT)	BENDING STRAIN (PCT)	TOTAL STRAIN (PCT)	PERCNT ALLOW (PCT)
1	LAYBARGE	96.31	6.41	1.93	0.00	9.935	0.000	0.00	2.74	0.0000	0.0021	0.0021	0.00
3	LAYBARGE	84.28	6.05	1.58	12.04	24.127	0.000	-0.73	-19.17	0.0000	-0.0143	0.0144	0.00
5	LAYBARGE	73.45	5.73	1.90	22.87	24.458	0.000	-1.39	-29.57	-0.0001	-0.0221	0.0222	0.00
7	TENSIONR	60.10	5.24	2.30	36.23	32.150	0.000	386.41	-22.70	0.0180	-0.0170	0.0350	0.00
9	LAYBARGE	51.10	4.87	2.21	45.24	0.000	0.000	385.69	28.26	0.0179	0.0211	0.0391	0.00
10	LAYBARGE	46.45	4.70	1.92	49.89	6.707	0.000	385.37	15.74	0.0179	0.0118	0.0297	0.00
12	LAYBARGE	35.36	4.31	2.68	60.99	44.220	0.000	384.29	-84.43	0.0179	-0.0631	0.0810	0.00
14	LAYBARGE	25.34	3.64	5.07	71.03	44.198	0.000	382.87	-117.09	0.0178	-0.0876	0.1054	0.00
16	LAYBARGE	19.31	3.03	6.26	77.09	0.000	0.000	381.98	-44.37	0.0178	-0.0332	0.0510	0.00
17	LAYBARGE	8.88	1.76	8.14	87.60	60.163	0.000	378.94	-137.41	0.0176	-0.1028	0.1204	0.00
19	LAYBARGE	4.89	1.14	9.20	91.63	0.000	0.000	378.16	-59.49	0.0176	-0.0445	0.0621	0.00
20	LAYBARGE	3.07	0.84	9.41	93.48	0.000	0.227	377.61	-33.90	0.0176	-0.0254	0.0429	0.00
24	STINGER	-7.64	-0.96	9.54	104.34	0.000	0.282	374.99	-4.95	0.0174	-0.0037	0.0211	0.00
26	STINGER	-16.65	-2.53	10.64	113.48	28.637	0.000	373.13	-113.82	0.0173	-0.0851	0.1025	0.00
29	STINGER	-26.32	-4.59	13.78	123.38	40.704	0.000	370.61	-181.74	0.0171	-0.1398	0.1570	0.00
31	STINGER	-36.83	-7.59	18.06	134.31	52.333	0.000	367.53	-192.62	0.0169	-0.1550	0.1721	0.00
33	STINGER	-39.69	-8.55	19.23	137.32	0.000	0.304	367.12	-112.91	0.0168	-0.0844	0.1015	0.00
35	SAGBEND	-45.36	-10.60	20.17	143.35	0.000	0.000	365.35	-21.23	0.0167	-0.0159	0.0329	0.00
36	SAGBEND	-51.04	-12.69	20.13	149.40	0.000	0.000	363.26	21.44	0.0166	0.0160	0.0329	0.00
37	SAGBEND	-56.73	-14.75	19.62	155.45	0.000	0.000	361.18	41.44	0.0164	0.0310	0.0478	0.00
38	SAGBEND	-62.44	-16.74	18.90	161.50	0.000	0.000	359.16	51.02	0.0162	0.0382	0.0548	0.00
39	SAGBEND	-68.18	-18.66	18.06	167.55	0.000	0.000	357.23	55.77	0.0161	0.0417	0.0583	0.00
40	SAGBEND	-73.94	-20.49	17.18	173.60	0.000	0.000	355.40	58.30	0.0160	0.0436	0.0601	0.00
41	SAGBEND	-79.74	-22.24	16.26	179.65	0.000	0.000	353.66	59.78	0.0158	0.0447	0.0611	0.00
42	SAGBEND	-85.56	-23.88	15.33	185.70	0.000	0.000	352.01	60.75	0.0157	0.0454	0.0618	0.00
43	SAGBEND	-91.41	-25.43	14.38	191.75	0.000	0.000	350.46	61.48	0.0156	0.0460	0.0623	0.00
44	SAGBEND	-97.28	-26.89	13.42	197.80	0.000	0.000	349.00	62.08	0.0155	0.0464	0.0626	0.00
45	SAGBEND	-103.17	-28.24	12.45	203.85	0.000	0.000	347.65	62.60	0.0154	0.0468	0.0630	0.00
46	SAGBEND	-109.09	-29.50	11.48	209.90	0.000	0.000	346.39	63.05	0.0153	0.0472	0.0632	0.00
47	SAGBEND	-115.03	-30.65	10.50	215.95	0.000	0.000	345.24	63.43	0.0152	0.0474	0.0635	0.00
48	SAGBEND	-120.99	-31.70	9.51	222.00	0.000	0.000	344.19	63.73	0.0151	0.0477	0.0637	0.00
49	SAGBEND	-126.96	-32.65	8.52	228.05	0.000	0.000	343.24	63.89	0.0151	0.0478	0.0637	0.00
50	SAGBEND	-132.96	-33.49	7.53	234.10	0.000	0.000	342.40	63.80	0.0150	0.0477	0.0636	0.00
51	SAGBEND	-138.96	-34.23	6.55	240.15	0.000	0.000	341.66	63.22	0.0150	0.0473	0.0631	0.00
52	SAGBEND	-144.98	-34.87	5.58	246.20	0.000	0.000	341.03	61.65	0.0149	0.0461	0.0619	0.00
53	SAGBEND	-151.00	-35.41	4.64	252.25	0.000	0.000	340.50	58.02	0.0149	0.0434	0.0592	0.00
54	SAGBEND	-157.04	-35.86	3.80	258.30	0.000	0.000	340.08	50.13	0.0148	0.0375	0.0533	0.00
55	SAGBEND	-163.07	-36.22	3.13	264.35	0.000	0.000	339.74	33.28	0.0148	0.0249	0.0407	0.00
56	SAGBEND	-168.82	-36.52	2.86	270.11	0.000	0.000	339.47	0.00	0.0148	0.0000	0.0158	0.00
57	SAGBEND	-175.16	-36.68	1.49	276.45	0.000	0.000	339.57	0.00	0.0000	0.0000	0.0000	0.00
58	SAGBEND	-181.21	-36.84	1.49	282.50	0.000	0.000	339.57	0.00	0.0000	0.0000	0.0000	0.00
59	SAGBEND	-187.26	-37.00	1.49	288.55	0.000	0.000	339.57	0.00	0.0000	0.0000	0.0000	0.00
60	SAGBEND	-193.31	-37.15	1.49	294.60	0.000	0.000	339.57	0.00	0.0000	0.0000	0.0000	0.00

S T A T I C P I P E C O O R D I N A T E S, F O R C E S A N D S T R A I N S

NODE NO.	PIPE SECTION	X COORD (M)	Y COORD (M)	VERT ANGLE (DEG)	PIPE LENGTH (M)	SUPPORT REACTION (KN)	SEPARA -TION (M)	AXIAL TENSION (KN)	BENDING MOMENT (KN-M)	TENSILE STRAIN (PCT)	BENDING STRAIN (PCT)	TOTAL STRAIN (PCT)	PERCNT ALLOW (PCT)
61	SAGBEND	-199.35	-37.31	1.48	300.65	0.000	0.000	339.57	0.00	0.0000	0.0000	0.0000	0.00
62	SAGBEND	-205.40	-37.47	1.48	306.70	0.000	0.000	339.57	0.00	0.0000	0.0000	0.0000	0.00
63	SAGBEND	-211.45	-37.62	1.48	312.75	0.000	0.000	339.57	0.00	0.0000	0.0000	0.0000	0.00
64	SAGBEND	-217.50	-37.78	1.47	318.80	0.000	0.000	339.56	0.00	0.0000	0.0000	0.0000	0.00
65	SAGBEND	-223.55	-37.93	1.47	324.85	0.000	0.000	339.56	0.00	0.0000	0.0000	0.0000	0.00
66	SAGBEND	-229.59	-38.09	1.47	330.90	0.000	0.000	339.56	0.00	0.0000	0.0000	0.0000	0.00
67	SAGBEND	-235.64	-38.24	1.47	336.95	0.000	0.000	339.56	0.00	0.0000	0.0000	0.0000	0.00
68	SAGBEND	-241.69	-38.40	1.46	343.00	0.000	0.000	339.56	0.00	0.0000	0.0000	0.0000	0.00
69	SAGBEND	-247.74	-38.55	1.46	349.05	0.000	0.000	339.56	0.00	0.0000	0.0000	0.0000	0.00
70	SAGBEND	-253.78	-38.71	1.46	355.10	0.000	0.000	339.56	0.00	0.0000	0.0000	0.0000	0.00
71	SAGBEND	-259.83	-38.86	1.46	361.15	0.000	0.000	339.56	0.00	0.0000	0.0000	0.0000	0.00
72	SAGBEND	-265.88	-39.01	1.45	367.20	0.000	0.000	339.56	0.00	0.0000	0.0000	0.0000	0.00
73	SAGBEND	-271.93	-39.17	1.45	373.25	0.000	0.000	339.56	0.00	0.0000	0.0000	0.0000	0.00
74	SAGBEND	-277.97	-39.32	1.45	379.30	0.000	0.000	339.56	0.00	0.0000	0.0000	0.0000	0.00
75	SAGBEND	-284.02	-39.47	1.45	385.35	0.000	0.000	339.56	0.00	0.0000	0.0000	0.0000	0.00
76	SAGBEND	-290.07	-39.63	1.44	391.40	0.000	0.000	339.56	0.00	0.0000	0.0000	0.0000	0.00
77	SAGBEND	-296.12	-39.78	1.44	397.45	0.000	0.000	339.56	0.00	0.0000	0.0000	0.0000	0.00
78	SAGBEND	-302.17	-39.93	1.44	403.50	0.000	0.000	339.56	0.00	0.0000	0.0000	0.0000	0.00
79	SAGBEND	-308.21	-40.08	1.43	409.55	0.000	0.000	339.56	0.00	0.0000	0.0000	0.0000	0.00
80	SAGBEND	-314.26	-40.23	1.43	415.60	0.000	0.000	339.56	0.00	0.0000	0.0000	0.0000	0.00
81	SAGBEND	-320.31	-40.38	1.43	421.65	0.000	0.000	339.56	0.00	0.0000	0.0000	0.0000	0.00
82	SAGBEND	-326.36	-40.54	1.43	427.70	0.000	0.000	339.56	0.00	0.0000	0.0000	0.0000	0.00
83	SAGBEND	-332.41	-40.69	1.42	433.75	0.000	0.000	339.56	0.00	0.0000	0.0000	0.0000	0.00
84	SAGBEND	-338.45	-40.84	1.42	439.80	0.000	0.000	339.56	0.00	0.0000	0.0000	0.0000	0.00
85	SAGBEND	-344.50	-40.99	1.42	445.85	0.000	0.000	339.56	0.00	0.0000	0.0000	0.0000	0.00
86	SAGBEND	-350.55	-41.14	1.42	451.90	0.000	0.000	339.56	0.00	0.0000	0.0000	0.0000	0.00
87	SAGBEND	-356.60	-41.29	1.41	457.94	0.000	0.000	339.56	0.00	0.0000	0.0000	0.0000	0.00
88	SAGBEND	-362.64	-41.43	1.41	463.99	0.000	0.000	339.56	0.00	0.0000	0.0000	0.0000	0.00
89	SAGBEND	-365.70	-41.51	1.41	467.05	0.000	0.000	339.56	0.00	0.0000	0.0000	0.0000	0.00
90	SAGBEND	-368.75	-41.58	1.41	470.10	0.000	0.000	339.55	0.00	0.0000	0.0000	0.0000	0.00
91	SAGBEND	-374.74	-41.73	1.31	476.09	0.000	0.000	339.54	0.00	0.0000	0.0000	0.0000	0.00
92	SAGBEND	-380.79	-41.86	1.22	482.14	0.000	0.000	339.53	0.00	0.0000	0.0000	0.0000	0.00
93	SAGBEND	-386.84	-41.98	1.12	488.19	0.000	0.000	339.52	0.00	0.0000	0.0000	0.0000	0.00
94	SAGBEND	-392.88	-42.10	1.02	494.24	0.000	0.000	339.51	0.00	0.0000	0.0000	0.0000	0.00
95	SAGBEND	-398.93	-42.20	0.93	500.29	0.000	0.000	339.50	0.00	0.0000	0.0000	0.0000	0.00
96	SAGBEND	-404.98	-42.29	0.83	506.34	0.000	0.000	339.49	0.00	0.0000	0.0000	0.0000	0.00
97	SAGBEND	-411.03	-42.38	0.74	512.39	0.000	0.000	339.48	0.00	0.0000	0.0000	0.0000	0.00
98	SAGBEND	-417.08	-42.45	0.64	518.44	0.000	0.000	339.47	0.00	0.0000	0.0000	0.0000	0.00
99	SAGBEND	-423.13	-42.51	0.54	524.49	0.000	0.000	339.47	0.00	0.0000	0.0000	0.0000	0.00
100	SAGBEND	-429.18	-42.56	0.45	530.54	0.000	0.000	339.46	0.00	0.0000	0.0000	0.0000	0.00
101	SAGBEND	-435.23	-42.60	0.35	536.59	0.000	0.000	339.46	0.00	0.0000	0.0000	0.0000	0.00
102	SAGBEND	-441.28	-42.64	0.25	542.64	0.000	0.000	339.46	0.00	0.0000	0.0000	0.0000	0.00
103	SAGBEND	-447.33	-42.66	0.16	548.69	0.000	0.000	339.45	0.00	0.0000	0.0000	0.0000	0.00

104	SAGBEND	-453.38	-42.67	0.06	554.74	0.089	0.000	339.45	0.00	0.0000	0.0000	0.0000	0.00

S T A T I C P I P E C O O R D I N A T E S, F O R C E S A N D S T R A I N S

NODE NO.	PIPE SECTION	X COORD (M)	Y COORD (M)	VERT ANGLE (DEG)	PIPE LENGTH (M)	SUPPORT REACTION (KN)	SEPARA -TION (M)	AXIAL TENSION (KN)	BENDING MOMENT (KN-M)	TENSILE STRAIN (PCT)	BENDING STRAIN (PCT)	TOTAL STRAIN (PCT)	PERCNT ALLOW (PCT)
105	SEABED	-459.43	-42.67	0.01	560.79	0.435	0.000	339.45	0.00	0.0000	0.0000	0.0000	0.00
106	SEABED	-465.48	-42.67	0.00	566.84	0.546	0.000	339.45	0.00	0.0000	0.0000	0.0000	0.00
107	SEABED	-471.52	-42.67	0.00	572.89	0.566	0.000	339.45	0.00	0.0000	0.0000	0.0000	0.00
108	SEABED	-477.57	-42.67	0.00	578.93	0.570	0.000	339.45	0.00	0.0000	0.0000	0.0000	0.00
109	SEABED	-483.62	-42.67	0.00	584.98	0.570	0.000	339.45	0.00	0.0000	0.0000	0.0000	0.00
110	SEABED	-489.67	-42.67	0.00	591.03	0.571	0.000	339.45	0.00	0.0000	0.0000	0.0000	0.00
111	SEABED	-495.72	-42.67	0.00	597.08	0.571	0.000	339.45	0.00	0.0000	0.0000	0.0000	0.00
112	SEABED	-501.77	-42.67	0.00	603.13	0.571	0.000	339.45	0.00	0.0000	0.0000	0.0000	0.00
113	SEABED	-507.82	-42.67	0.00	609.18	0.571	0.000	339.45	0.00	0.0000	0.0000	0.0000	0.00
114	SEABED	-513.87	-42.67	0.00	615.23	0.571	0.000	339.45	0.00	0.0000	0.0000	0.0000	0.00
115	SEABED	-519.92	-42.67	0.00	621.28	0.571	0.000	339.45	0.00	0.0000	0.0000	0.0000	0.00
116	SEABED	-525.97	-42.67	0.00	627.33	0.571	0.000	339.45	0.00	0.0000	0.0000	0.0000	0.00
117	SEABED	-532.02	-42.67	0.00	633.38	0.571	0.000	339.45	0.00	0.0000	0.0000	0.0000	0.00
118	SEABED	-538.07	-42.67	0.00	639.43	0.571	0.000	339.45	0.00	0.0000	0.0000	0.0000	0.00
119	SEABED	-544.12	-42.67	0.00	645.48	0.571	0.000	339.45	0.00	0.0000	0.0000	0.0000	0.00
120	SEABED	-550.17	-42.67	0.00	651.53	0.571	0.000	339.45	0.00	0.0000	0.0000	0.0000	0.00
121	SEABED	-556.22	-42.67	0.00	657.58	0.571	0.000	339.45	0.00	0.0000	0.0000	0.0000	0.00
122	SEABED	-562.27	-42.67	0.00	663.63	0.571	0.000	339.45	0.00	0.0000	0.0000	0.0000	0.00
123	SEABED	-568.32	-42.67	0.00	669.68	0.571	0.000	339.45	0.00	0.0000	0.0000	0.0000	0.00
124	SEABED	-574.37	-42.67	0.00	675.73	0.571	0.000	339.45	0.00	0.0000	0.0000	0.0000	0.00
125	SEABED	-580.42	-42.67	0.00	681.78	0.571	0.000	339.45	0.00	0.0000	0.0000	0.0000	0.00
126	SEABED	-586.47	-42.67	0.00	687.83	0.571	0.000	339.45	0.00	0.0000	0.0000	0.0000	0.00
127	SEABED	-592.51	-42.67	0.00	693.88	0.571	0.000	339.45	0.00	0.0000	0.0000	0.0000	0.00
128	SEABED	-598.56	-42.67	0.00	699.92	0.571	0.000	339.45	0.00	0.0000	0.0000	0.0000	0.00
129	SEABED	-604.61	-42.67	0.00	705.97	0.571	0.000	339.45	0.00	0.0000	0.0000	0.0000	0.00
130	SEABED	-610.66	-42.67	0.00	712.02	0.571	0.000	339.45	0.00	0.0000	0.0000	0.0000	0.00
131	SEABED	-616.71	-42.67	0.00	718.07	0.571	0.000	339.45	0.00	0.0000	0.0000	0.0000	0.00
132	SEABED	-622.76	-42.67	0.00	724.12	0.571	0.000	339.45	0.00	0.0000	0.0000	0.0000	0.00
133	SEABED	-628.81	-42.67	0.00	730.17	0.571	0.000	339.45	0.00	0.0000	0.0000	0.0000	0.00
134	SEABED	-634.86	-42.67	0.00	736.22	0.571	0.000	339.45	0.00	0.0000	0.0000	0.0000	0.00
135	SEABED	-640.91	-42.67	0.00	742.27	0.571	0.000	339.45	0.00	0.0000	0.0000	0.0000	0.00
136	SEABED	-646.96	-42.67	0.00	748.32	0.571	0.000	339.45	0.00	0.0000	0.0000	0.0000	0.00
137	SEABED	-653.01	-42.67	0.00	754.37	0.571	0.000	339.45	0.00	0.0000	0.0000	0.0000	0.00
138	SEABED	-659.06	-42.67	0.00	760.42	0.571	0.000	339.45	0.00	0.0000	0.0000	0.0000	0.00
139	SEABED	-665.11	-42.67	0.00	766.47	0.571	0.000	339.45	0.00	0.0000	0.0000	0.0000	0.00
140	SEABED	-671.16	-42.67	0.00	772.52	0.571	0.000	339.45	0.00	0.0000	0.0000	0.0000	0.00
141	SEABED	-677.21	-42.67	0.00	778.57	0.571	0.000	339.45	0.00	0.0000	0.0000	0.0000	0.00
142	SEABED	-683.26	-42.67	0.00	784.62	0.571	0.000	339.45	0.00	0.0000	0.0000	0.0000	0.00
143	SEABED	-689.31	-42.67	0.00	790.67	0.571	0.000	339.45	0.00	0.0000	0.0000	0.0000	0.00
144	SEABED	-695.36	-42.67	0.00	796.72	0.571	0.000	339.45	0.00	0.0000	0.0000	0.0000	0.00
145	SEABED	-701.41	-42.67	0.00	802.77	0.571	0.000	339.45	0.00	0.0000	0.0000	0.0000	0.00
146	SEABED	-707.46	-42.67	0.00	808.82	0.571	0.000	339.45	0.00	0.0000	0.0000	0.0000	0.00
147	SEABED	-713.50	-42.67	0.00	814.87	0.571	0.000	339.45	0.00	0.0000	0.0000	0.0000	0.00
148	SEABED	-719.55	-42.67	0.00	820.91	0.571	0.000	339.45	0.00	0.0000	0.0000	0.0000	0.00
149	SEABED	-725.60	-42.67	0.00	826.96	0.571	0.000	339.45	0.00	0.0000	0.0000	0.0000	0.00

S T A T I C P I P E C O O R D I N A T E S, F O R C E S A N D S T R A I N S

NODE NO.	PIPE SECTION	X COORD (M)	Y COORD (M)	VERT ANGLE (DEG)	PIPE LENGTH (M)	SUPPORT REACTION (KN)	SEPARA -TION (M)	AXIAL TENSION (KN)	BENDING MOMENT (KN-M)	TENSILE STRAIN (PCT)	BENDING STRAIN (PCT)	TOTAL STRAIN (PCT)	PERCNT ALLOW (PCT)
150	SEABED	-731.65	-42.67	0.00	833.01	0.571	0.000	339.45	0.00	0.0000	0.0000	0.0000	0.00
151	SEABED	-737.70	-42.67	0.00	839.06	0.571	0.000	339.45	0.00	0.0000	0.0000	0.0000	0.00
152	SEABED	-743.75	-42.67	0.00	845.11	0.570	0.000	339.45	0.00	0.0000	0.0000	0.0000	0.00
153	SEABED	-749.80	-42.67	0.00	851.16	0.567	0.000	339.45	0.00	0.0000	0.0000	0.0000	0.00
154	SEABED	-755.85	-42.67	0.00	857.21	0.553	0.000	339.45	0.00	0.0000	0.0000	0.0000	0.00
155	SEABED	-761.90	-42.67	-0.01	863.26	0.388	0.000	339.45	0.00	0.0000	0.0000	0.0000	0.00
156	SEABED	-765.30	-42.67	-0.02	866.67	0.191	0.000	339.45	0.00	0.0000	0.0000	0.0000	0.00
157	SEABED	-768.71	-42.67	-0.06	870.07	0.000	0.000	339.45	0.00	0.0000	0.0000	0.0000	0.00

S T A T I C P I P E C O O R D I N A T E S, F O R C E S A N D S T R A I N S

NODE NO.	PIPE SECTION	X COORD (M)	Y COORD (M)	VERT ANGLE (DEG)	PIPE LENGTH (M)	SUPPORT REACTION (KN)	SEPARA -TION (M)	AXIAL TENSION (KN)	BENDING MOMENT (KN-M)	TENSILE STRAIN (PCT)	BENDING STRAIN (PCT)	TOTAL STRAIN (PCT)	PERCNT ALLOW (PCT)
1	LAYBARGE	96.31	6.41	1.93	0.00	9.934	0.000	0.00	2.74	0.0000	0.0021	0.0021	0.00
3	LAYBARGE	84.28	6.05	1.58	12.04	24.130	0.000	-0.73	-19.18	0.0000	-0.0143	0.0144	0.00
5	LAYBARGE	73.45	5.73	1.90	22.87	24.448	0.000	-1.39	-29.55	-0.0001	-0.0221	0.0222	0.00
7	TENSIONR	60.10	5.24	2.30	36.23	32.182	0.000	386.41	-22.75	0.0180	-0.0170	0.0350	0.00
9	LAYBARGE	51.10	4.87	2.21	45.24	0.000	0.000	385.69	28.42	0.0179	0.0213	0.0392	0.00
10	LAYBARGE	46.45	4.70	1.92	49.89	6.506	0.000	385.37	16.02	0.0179	0.0120	0.0299	0.00
12	LAYBARGE	35.36	4.31	2.69	60.99	45.216	0.000	384.28	-85.25	0.0179	-0.0638	0.0816	0.00
14	LAYBARGE	25.34	3.64	5.02	71.03	41.340	0.000	382.91	-111.15	0.0178	-0.0831	0.1009	0.00
16	LAYBARGE	19.31	3.04	6.19	77.09	0.000	0.000	381.99	-47.00	0.0178	-0.0352	0.0529	0.00
17	LAYBARGE	8.88	1.76	8.41	87.60	67.196	0.000	378.74	-162.43	0.0176	-0.1220	0.1396	0.00
19	LAYBARGE	4.90	1.12	9.69	91.63	0.000	0.000	378.05	-76.61	0.0176	-0.0573	0.0749	0.00
20	LAYBARGE	3.08	0.80	9.98	93.48	0.000	0.182	377.50	-48.22	0.0176	-0.0361	0.0536	0.00
24	STINGER	-7.62	-1.14	10.38	104.36	0.000	0.227	374.80	-13.00	0.0174	-0.0097	0.0272	0.00
26	STINGER	-16.60	-2.86	11.72	113.50	33.091	0.000	372.73	-127.35	0.0173	-0.0953	0.1126	0.00
29	STINGER	-26.24	-5.11	14.85	123.39	35.479	0.000	370.20	-168.58	0.0171	-0.1271	0.1443	0.00
31	STINGER	-36.70	-8.29	19.02	134.33	53.877	0.000	366.81	-195.39	0.0168	-0.1604	0.1774	0.00
33	STINGER	-39.54	-9.30	20.20	137.34	0.000	0.305	366.36	-114.96	0.0168	-0.0860	0.1030	0.00
35	SAGBEND	-45.16	-11.44	21.17	143.35	0.000	0.000	364.51	-22.56	0.0166	-0.0169	0.0338	0.00
36	SAGBEND	-50.80	-13.63	21.14	149.40	0.000	0.000	362.33	20.68	0.0165	0.0155	0.0323	0.00
37	SAGBEND	-56.45	-15.79	20.64	155.45	0.000	0.000	360.14	40.97	0.0163	0.0306	0.0474	0.00
38	SAGBEND	-62.12	-17.89	19.92	161.50	0.000	0.000	358.02	50.70	0.0162	0.0379	0.0546	0.00
39	SAGBEND	-67.82	-19.91	19.10	167.55	0.000	0.000	355.99	55.56	0.0160	0.0416	0.0581	0.00
40	SAGBEND	-73.56	-21.84	18.21	173.60	0.000	0.000	354.05	58.15	0.0159	0.0435	0.0599	0.00
41	SAGBEND	-79.32	-23.69	17.30	179.65	0.000	0.000	352.21	59.68	0.0157	0.0446	0.0610	0.00
42	SAGBEND	-85.11	-25.44	16.36	185.70	0.000	0.000	350.45	60.70	0.0156	0.0454	0.0617	0.00
43	SAGBEND	-90.93	-27.10	15.42	191.75	0.000	0.000	348.80	61.48	0.0155	0.0460	0.0622	0.00
44	SAGBEND	-96.77	-28.66	14.46	197.80	0.000	0.000	347.24	62.12	0.0154	0.0465	0.0626	0.00
45	SAGBEND	-102.64	-30.12	13.49	203.85	0.000	0.000	345.78	62.69	0.0153	0.0469	0.0629	0.00
46	SAGBEND	-108.54	-31.48	12.51	209.90	0.000	0.000	344.42	63.19	0.0152	0.0473	0.0633	0.00
47	SAGBEND	-114.45	-32.74	11.53	215.95	0.000	0.000	343.16	63.65	0.0151	0.0476	0.0635	0.00
48	SAGBEND	-120.39	-33.90	10.54	222.00	0.000	0.000	342.00	64.06	0.0150	0.0479	0.0638	0.00
49	SAGBEND	-126.35	-34.95	9.54	228.05	0.000	0.000	340.94	64.40	0.0149	0.0482	0.0640	0.00
50	SAGBEND	-132.32	-35.90	8.54	234.10	0.000	0.000	339.99	64.63	0.0148	0.0483	0.0641	0.00
51	SAGBEND	-138.32	-36.75	7.54	240.15	0.000	0.000	339.15	64.70	0.0148	0.0484	0.0641	0.00
52	SAGBEND	-144.32	-37.49	6.54	246.20	0.000	0.000	338.41	64.44	0.0147	0.0482	0.0639	0.00
53	SAGBEND	-150.34	-38.13	5.54	252.25	0.000	0.000	337.77	63.54	0.0147	0.0475	0.0632	0.00
54	SAGBEND	-156.36	-38.66	4.57	258.30	0.000	0.000	337.25	61.35	0.0146	0.0459	0.0615	0.00
55	SAGBEND	-162.40	-39.09	3.65	264.35	0.000	0.000	336.83	56.48	0.0146	0.0422	0.0579	0.00
56	SAGBEND	-168.44	-39.43	2.85	270.40	0.000	0.000	336.51	46.04	0.0146	0.0344	0.0501	0.00
57	SAGBEND	-174.48	-39.70	2.29	276.45	0.000	0.000	336.28	23.94	0.0146	0.0179	0.0335	0.00
58	SAGBEND	-178.14	-39.84	2.17	280.11	0.000	0.000	336.15	0.00	0.0145	0.0000	0.0157	0.00
59	SAGBEND	-182.36	-39.90	0.78	284.33	0.000	0.000	336.25	0.00	0.0000	0.0000	0.0000	0.00
60	SAGBEND	-186.58	-39.96	0.78	288.55	0.000	0.000	336.25	0.00	0.0000	0.0000	0.0000	0.00

S T A T I C P I P E C O O R D I N A T E S, F O R C E S A N D S T R A I N S

NODE NO.	PIPE SECTION	X COORD (M)	Y COORD (M)	VERT ANGLE (DEG)	PIPE LENGTH (M)	SUPPORT REACTION (KN)	SEPARA -TION (M)	AXIAL TENSION (KN)	BENDING MOMENT (KN-M)	TENSILE STRAIN (PCT)	BENDING STRAIN (PCT)	TOTAL STRAIN (PCT)	PERCNT ALLOW (PCT)
61	SAGBEND	-192.63	-40.04	0.77	294.60	0.000	0.000	336.25	0.00	0.0000	0.0000	0.0000	0.00
62	SAGBEND	-198.67	-40.12	0.77	300.65	0.000	0.000	336.25	0.00	0.0000	0.0000	0.0000	0.00
63	SAGBEND	-204.72	-40.20	0.77	306.70	0.000	0.000	336.25	0.00	0.0000	0.0000	0.0000	0.00
64	SAGBEND	-210.77	-40.28	0.77	312.75	0.000	0.000	336.25	0.00	0.0000	0.0000	0.0000	0.00
65	SAGBEND	-216.82	-40.36	0.76	318.80	0.000	0.000	336.25	0.00	0.0000	0.0000	0.0000	0.00
66	SAGBEND	-222.87	-40.45	0.76	324.85	0.000	0.000	336.25	0.00	0.0000	0.0000	0.0000	0.00
67	SAGBEND	-228.92	-40.53	0.76	330.90	0.000	0.000	336.25	0.00	0.0000	0.0000	0.0000	0.00
68	SAGBEND	-234.97	-40.61	0.76	336.95	0.000	0.000	336.25	0.00	0.0000	0.0000	0.0000	0.00
69	SAGBEND	-241.02	-40.68	0.75	343.00	0.000	0.000	336.24	0.00	0.0000	0.0000	0.0000	0.00
70	SAGBEND	-247.07	-40.76	0.75	349.05	0.000	0.000	336.24	0.00	0.0000	0.0000	0.0000	0.00
71	SAGBEND	-253.12	-40.84	0.75	355.10	0.000	0.000	336.24	0.00	0.0000	0.0000	0.0000	0.00
72	SAGBEND	-259.17	-40.92	0.74	361.15	0.000	0.000	336.24	0.00	0.0000	0.0000	0.0000	0.00
73	SAGBEND	-265.21	-41.00	0.74	367.20	0.000	0.000	336.24	0.00	0.0000	0.0000	0.0000	0.00
74	SAGBEND	-271.26	-41.08	0.74	373.25	0.000	0.000	336.24	0.00	0.0000	0.0000	0.0000	0.00
75	SAGBEND	-277.31	-41.16	0.74	379.30	0.000	0.000	336.24	0.00	0.0000	0.0000	0.0000	0.00
76	SAGBEND	-283.36	-41.23	0.73	385.35	0.000	0.000	336.24	0.00	0.0000	0.0000	0.0000	0.00
77	SAGBEND	-289.41	-41.31	0.73	391.40	0.000	0.000	336.24	0.00	0.0000	0.0000	0.0000	0.00

78	SAGBEND	-295.46	-41.39	0.73	397.45	0.000	0.000	336.24	0.00	0.0000	0.0000	0.0000	0.00
79	SAGBEND	-301.51	-41.46	0.73	403.50	0.000	0.000	336.24	0.00	0.0000	0.0000	0.0000	0.00
80	SAGBEND	-307.56	-41.54	0.72	409.55	0.000	0.000	336.24	0.00	0.0000	0.0000	0.0000	0.00
81	SAGBEND	-313.61	-41.62	0.72	415.60	0.000	0.000	336.24	0.00	0.0000	0.0000	0.0000	0.00
82	SAGBEND	-319.66	-41.69	0.72	421.65	0.000	0.000	336.24	0.00	0.0000	0.0000	0.0000	0.00
83	SAGBEND	-325.71	-41.77	0.71	427.69	0.000	0.000	336.24	0.00	0.0000	0.0000	0.0000	0.00
84	SAGBEND	-331.76	-41.84	0.71	433.74	0.000	0.000	336.24	0.00	0.0000	0.0000	0.0000	0.00
85	SAGBEND	-337.80	-41.92	0.71	439.79	0.000	0.000	336.24	0.00	0.0000	0.0000	0.0000	0.00
86	SAGBEND	-343.85	-41.99	0.71	445.84	0.000	0.000	336.24	0.00	0.0000	0.0000	0.0000	0.00
87	SAGBEND	-349.90	-42.07	0.70	451.89	0.000	0.000	336.24	0.00	0.0000	0.0000	0.0000	0.00
88	SAGBEND	-355.95	-42.14	0.70	457.94	0.000	0.000	336.24	0.00	0.0000	0.0000	0.0000	0.00
89	SAGBEND	-362.00	-42.22	0.70	463.99	0.000	0.000	336.24	0.00	0.0000	0.0000	0.0000	0.00
90	SAGBEND	-368.05	-42.29	0.70	470.04	0.000	0.000	336.24	0.00	0.0000	0.0000	0.0000	0.00
91	SAGBEND	-374.10	-42.36	0.69	476.09	0.000	0.000	336.24	0.00	0.0000	0.0000	0.0000	0.00
92	SAGBEND	-378.11	-42.41	0.69	480.10	0.000	0.000	336.24	0.00	0.0000	0.0000	0.0000	0.00
93	SAGBEND	-382.15	-42.46	0.63	484.15	0.000	0.000	336.24	0.00	0.0000	0.0000	0.0000	0.00
94	SAGBEND	-386.20	-42.50	0.56	488.19	0.000	0.000	336.23	0.00	0.0000	0.0000	0.0000	0.00
95	SAGBEND	-392.25	-42.55	0.46	494.24	0.000	0.000	336.23	0.00	0.0000	0.0000	0.0000	0.00
96	SAGBEND	-398.30	-42.60	0.37	500.29	0.000	0.000	336.22	0.00	0.0000	0.0000	0.0000	0.00
97	SAGBEND	-404.35	-42.63	0.27	506.34	0.000	0.000	336.22	0.00	0.0000	0.0000	0.0000	0.00
98	SAGBEND	-410.39	-42.66	0.17	512.39	0.000	0.000	336.22	0.00	0.0000	0.0000	0.0000	0.00
99	SAGBEND	-416.44	-42.67	0.08	518.44	0.053	0.000	336.22	0.00	0.0000	0.0000	0.0000	0.00
100	SEABED	-422.49	-42.67	0.01	524.49	0.398	0.000	336.22	0.00	0.0000	0.0000	0.0000	0.00
101	SEABED	-428.54	-42.67	0.00	530.54	0.540	0.000	336.22	0.00	0.0000	0.0000	0.0000	0.00
102	SEABED	-434.59	-42.67	0.00	536.59	0.565	0.000	336.22	0.00	0.0000	0.0000	0.0000	0.00
103	SEABED	-440.64	-42.67	0.00	542.64	0.570	0.000	336.22	0.00	0.0000	0.0000	0.0000	0.00
104	SEABED	-446.69	-42.67	0.00	548.68	0.570	0.000	336.22	0.00	0.0000	0.0000	0.0000	0.00

S T A T I C P I P E C O O R D I N A T E S, F O R C E S A N D S T R A I N S

NODE NO.	PIPE SECTION	X COORD (M)	Y COORD (M)	VERT ANGLE (DEG)	PIPE LENGTH (M)	SUPPORT REACTION (KN)	SEPARA -TION (M)	AXIAL TENSION (KN)	BENDING MOMENT (KN-M)	TENSILE STRAIN (PCT)	BENDING STRAIN (PCT)	TOTAL STRAIN (PCT)	PERCNT ALLOW (PCT)
105	SEABED	-452.74	-42.67	0.00	554.73	0.571	0.000	336.22	0.00	0.0000	0.0000	0.0000	0.00
106	SEABED	-458.79	-42.67	0.00	560.78	0.571	0.000	336.22	0.00	0.0000	0.0000	0.0000	0.00
107	SEABED	-464.84	-42.67	0.00	566.83	0.571	0.000	336.22	0.00	0.0000	0.0000	0.0000	0.00
108	SEABED	-470.89	-42.67	0.00	572.88	0.571	0.000	336.22	0.00	0.0000	0.0000	0.0000	0.00
109	SEABED	-476.94	-42.67	0.00	578.93	0.571	0.000	336.22	0.00	0.0000	0.0000	0.0000	0.00
110	SEABED	-482.99	-42.67	0.00	584.98	0.571	0.000	336.22	0.00	0.0000	0.0000	0.0000	0.00
111	SEABED	-489.04	-42.67	0.00	591.03	0.571	0.000	336.22	0.00	0.0000	0.0000	0.0000	0.00
112	SEABED	-495.09	-42.67	0.00	597.08	0.571	0.000	336.22	0.00	0.0000	0.0000	0.0000	0.00
113	SEABED	-501.14	-42.67	0.00	603.13	0.571	0.000	336.22	0.00	0.0000	0.0000	0.0000	0.00
114	SEABED	-507.18	-42.67	0.00	609.18	0.571	0.000	336.22	0.00	0.0000	0.0000	0.0000	0.00
115	SEABED	-513.23	-42.67	0.00	615.23	0.571	0.000	336.22	0.00	0.0000	0.0000	0.0000	0.00
116	SEABED	-519.28	-42.67	0.00	621.28	0.571	0.000	336.22	0.00	0.0000	0.0000	0.0000	0.00
117	SEABED	-525.33	-42.67	0.00	627.33	0.571	0.000	336.22	0.00	0.0000	0.0000	0.0000	0.00
118	SEABED	-531.38	-42.67	0.00	633.38	0.571	0.000	336.22	0.00	0.0000	0.0000	0.0000	0.00
119	SEABED	-537.43	-42.67	0.00	639.43	0.571	0.000	336.22	0.00	0.0000	0.0000	0.0000	0.00
120	SEABED	-543.48	-42.67	0.00	645.47	0.571	0.000	336.22	0.00	0.0000	0.0000	0.0000	0.00
121	SEABED	-549.53	-42.67	0.00	651.52	0.571	0.000	336.22	0.00	0.0000	0.0000	0.0000	0.00
122	SEABED	-555.58	-42.67	0.00	657.57	0.571	0.000	336.22	0.00	0.0000	0.0000	0.0000	0.00
123	SEABED	-561.63	-42.67	0.00	663.62	0.571	0.000	336.22	0.00	0.0000	0.0000	0.0000	0.00
124	SEABED	-567.68	-42.67	0.00	669.67	0.571	0.000	336.22	0.00	0.0000	0.0000	0.0000	0.00
125	SEABED	-573.73	-42.67	0.00	675.72	0.571	0.000	336.22	0.00	0.0000	0.0000	0.0000	0.00
126	SEABED	-579.78	-42.67	0.00	681.77	0.571	0.000	336.22	0.00	0.0000	0.0000	0.0000	0.00
127	SEABED	-585.83	-42.67	0.00	687.82	0.571	0.000	336.22	0.00	0.0000	0.0000	0.0000	0.00
128	SEABED	-591.88	-42.67	0.00	693.87	0.571	0.000	336.22	0.00	0.0000	0.0000	0.0000	0.00
129	SEABED	-597.93	-42.67	0.00	699.92	0.571	0.000	336.22	0.00	0.0000	0.0000	0.0000	0.00
130	SEABED	-603.97	-42.67	0.00	705.97	0.571	0.000	336.22	0.00	0.0000	0.0000	0.0000	0.00
131	SEABED	-610.02	-42.67	0.00	712.02	0.571	0.000	336.22	0.00	0.0000	0.0000	0.0000	0.00
132	SEABED	-616.07	-42.67	0.00	718.07	0.571	0.000	336.22	0.00	0.0000	0.0000	0.0000	0.00
133	SEABED	-622.12	-42.67	0.00	724.12	0.571	0.000	336.22	0.00	0.0000	0.0000	0.0000	0.00
134	SEABED	-628.17	-42.67	0.00	730.17	0.571	0.000	336.22	0.00	0.0000	0.0000	0.0000	0.00
135	SEABED	-634.22	-42.67	0.00	736.22	0.571	0.000	336.22	0.00	0.0000	0.0000	0.0000	0.00
136	SEABED	-640.27	-42.67	0.00	742.26	0.571	0.000	336.22	0.00	0.0000	0.0000	0.0000	0.00
137	SEABED	-646.32	-42.67	0.00	748.31	0.571	0.000	336.22	0.00	0.0000	0.0000	0.0000	0.00
138	SEABED	-652.37	-42.67	0.00	754.36	0.571	0.000	336.22	0.00	0.0000	0.0000	0.0000	0.00
139	SEABED	-658.42	-42.67	0.00	760.41	0.571	0.000	336.22	0.00	0.0000	0.0000	0.0000	0.00
140	SEABED	-664.47	-42.67	0.00	766.46	0.571	0.000	336.22	0.00	0.0000	0.0000	0.0000	0.00
141	SEABED	-670.52	-42.67	0.00	772.51	0.571	0.000	336.22	0.00	0.0000	0.0000	0.0000	0.00
142	SEABED	-676.57	-42.67	0.00	778.56	0.571	0.000	336.22	0.00	0.0000	0.0000	0.0000	0.00
143	SEABED	-682.62	-42.67	0.00	784.61	0.571	0.000	336.22	0.00	0.0000	0.0000	0.0000	0.00
144	SEABED	-688.67	-42.67	0.00	790.66	0.571	0.000	336.22	0.00	0.0000	0.0000	0.0000	0.00
145	SEABED	-694.72	-42.67	0.00	796.71	0.571	0.000	336.22	0.00	0.0000	0.0000	0.0000	0.00
146	SEABED	-700.77	-42.67	0.00	802.76	0.571	0.000	336.22	0.00	0.0000	0.0000	0.0000	0.00
147	SEABED	-706.81	-42.67	0.00	808.81	0.571	0.000	336.22	0.00	0.0000	0.0000	0.0000	0.00
148	SEABED	-712.86	-42.67	0.00	814.86	0.571	0.000	336.22	0.00	0.0000	0.0000	0.0000	0.00
149	SEABED	-718.91	-42.67	0.00	820.91	0.571	0.000	336.22	0.00	0.0000	0.0000	0.0000	0.00

S T A T I C P I P E C O O R D I N A T E S, F O R C E S A N D S T R A I N S

NODE NO.	PIPE SECTION	X COORD (M)	Y COORD (M)	VERT ANGLE (DEG)	PIPE LENGTH (M)	SUPPORT REACTION (KN)	SEPARA -TION (M)	AXIAL TENSION (KN)	BENDING MOMENT (KN-M)	TENSILE STRAIN (PCT)	BENDING STRAIN (PCT)	TOTAL STRAIN (PCT)	PERCNT ALLOW (PCT)
150	SEABED	-724.96	-42.67	0.00	826.96	0.571	0.000	336.22	0.00	0.0000	0.0000	0.0000	0.00
151	SEABED	-731.01	-42.67	0.00	833.01	0.571	0.000	336.22	0.00	0.0000	0.0000	0.0000	0.00
152	SEABED	-737.06	-42.67	0.00	839.06	0.571	0.000	336.22	0.00	0.0000	0.0000	0.0000	0.00
153	SEABED	-743.11	-42.67	0.00	845.10	0.571	0.000	336.22	0.00	0.0000	0.0000	0.0000	0.00
154	SEABED	-749.16	-42.67	0.00	851.15	0.570	0.000	336.22	0.00	0.0000	0.0000	0.0000	0.00
155	SEABED	-755.21	-42.67	0.00	857.20	0.570	0.000	336.22	0.00	0.0000	0.0000	0.0000	0.00
156	SEABED	-761.26	-42.67	0.00	863.25	0.565	0.000	336.22	0.00	0.0000	0.0000	0.0000	0.00
157	SEABED	-767.31	-42.67	0.00	869.30	0.539	0.000	336.22	0.00	0.0000	0.0000	0.0000	0.00
158	SEABED	-773.36	-42.67	-0.01	875.35	0.370	0.000	336.22	0.00	0.0000	0.0000	0.0000	0.00
159	SEABED	-778.07	-42.67	-0.06	880.06	0.000	0.000	336.22	0.00	0.0000	0.0000	0.0000	0.00

BIODATA PENULIS

Muhammad Zaki Rasyadi lahir di Bandung pada tangal 3 Juli 1997. Penulis merupakan anak satu-satunya dari pasangan Achmad Saichu dan Ryna Rachmawati. Pada jenjang taman kanak-kanak, penulis bersekolah di TK Asih Putera Cimahi. Kemudian penulis melanjutkan jenjang ke sekolah dasar di Madrasah Ibtidaiyah Asih Putera Cimahi. Pada jenjang sekolah menengah pertama penulis sempat bersekolah di SMPN 41 Bandung selama 1 tahun, kemudian penulis pindah sekolah ke SMPN 1 Bandung. Lalu penulis melanjutkan pendidikan ke jenjang sekolah menengah atas di SMAN 2 Bandung. Selama masa SMA penulis pernah disibukkan dengan kegiatan Pentas Seni SMAN 2 Bandung dan pengurus Remaja Masjid SMAN 2 Bandung. Setelah lulus SMA, penulis diterima di Departemen Teknik Kelautan Institut Teknologi Sepuluh Nopember (ITS) Surabaya. Selama menjadi mahasiswa penulis aktif mengikuti berbagai kegiatan kepanitiaan dan organisasi. Pada tahun pertama, penulis pernah mengikuti kepanitiaan ITS Futsal Competition 2016 yang diselenggarakan oleh UKM Sepakbola ITS. Karena tertarik untuk aktif mengurusi *event* seperti itu, pada tahun kedua penulis aktif menjadi staff PSDM UKM Sepakbola ITS. Ditahun kedua ini juga penulis pernah didanai oleh Dikti untuk mengerjakan Program Kreatifitas Mahasiswa dengan ide mengubah energi gelombang menjadi energi listrik. Penasaran dengan gerakan sosial, penulis memutuskan untuk bergabung dengan organisasi ekstra kampus yang dikenal dengan nama Swayanaka Regional Surabaya. Pada tahun ketiga perkuliahan, penulis diberi amanat untuk menjadi Ketua Umum Swayanaka Regional Surabaya periode 2018-2019. Ditahun ketiga ini juga, penulis melakukan kerja praktik di PT KHI Pipe Industries. Kemudian di tahun keempat, penulis mengambil tugas akhir dalam bidang perencanaan dan perancangan pipa bawah laut dengan judul tugas akhir "*Analisis Proses Initiation dan Laydown Pada Saat Instalasi Pipeline dengan Metode S-Lay*". Selama pengerjaan tugas akhir tersebut penulis dibimbing oleh Bapak Ir. Imam Rochani, M.Sc. dan Bapak Ir. Handayanu, M.Sc., Ph.D.