PROYEK AKHIR – VC 191845

PERENCANAAN ULANG STRUKTUR JEMBATAN UMBUL KAJI KAB.MALANG STA 13+805 DENGAN STRUKTUR *CABLE-STAYED*

AULIA ULUL ABSHOR
NRP : 10111610013002

DOSEN PEMBIMBING I
Ir. Ibnu Pudji Rahardjo, MS
NIP. 19600105 198603 1 003

DOSEN PEMBIMBING II
Ir. Chomaedhi, CES. Geo
NIP. 19550319 198403 1 001

DEPARTEMEN TEKNIK INFRASTRUKTUR SIPIL
FAKULTAS VOKASI
INSTITUT TEKNOLOGI SEPULUH NOPEMBER
SURABAYA 2020

PROYEK AKHIR – VC 191845

PERENCANAAN ULANG STRUKTUR JEMBATAN UMBUL KAJI KAB.MALANG STA 13+805 DENGAN STRUKTUR *CABLE-STAYED*

AULIA ULUL ABSHOR
NRP : 10111610013002

DOSEN PEMBIMBING I
Ir. Ibnu Pudji Rahardjo, MS
NIP. 19600105 198603 1 003

DOSEN PEMBIMBING II
Ir. Chomaedhi, CES. Geo
NIP. 19550319 198403 1 001

DEPARTEMEN TEKNIK INFRASTRUKTUR SIPIL
FAKULTAS VOKASI
INSTITUT TEKNOLOGI SEPULUH NOPEMBER
SURABAYA 2020

FINAL PROJECT – VC 191845

RE-DESIGN STRUCTURE OF UMBUL KAJI BRIDGES MALANG STA 13+805 BY USING CABLE-STAYED STRUCTURE

AULIA ULUL ABSHOR
NRP : 10111610013002

CONSELING LECTURE I
Ir. Ibnu Pudji Rahardjo, MS
NIP. 19600105 198603 1 003

CONSELING LECTURE II
Ir. Chomaedhi, CES. Geo
NIP. 19550319 198403 1 001

DEPARTEMEN OF CIVIL INFRASTRUCTRE ENGINEERING
FACULTY OF VOCATIONAL
INSTITUT TEKNOLOGI SEPULUH NOPEMBER
SURABAYA 2020

FINAL PROJECT – VC 191845

RE-DESIGN STRUCTURE OF UMBUL KAJI BRIDGES MALANG STA 13+805 BY USING CABLE-STAYED STRUCTURE

AULIA ULUL ABSHOR
NRP : 10111610013002

CONSELING LECTURE I
Ir. Ibnu Pudji Rahardjo, MS
NIP. 19600105 198603 1 003

CONSELING LECTURE II
Ir. Chomaedhi, CES. Geo
NIP. 19550319 198403 1 001

DEPARTEMEN OF CIVIL INFRASTRUCTURE ENGINEERING
FACULTY OF VOCATIONAL
INSTITUT TEKNOLOGI SEPULUH NOPEMBER
SURABAYA 2020

LEMBAR PENGESAHAN

PERENCANAAN ULANG STRUKTUR JEMBATAN UMBUL KAJI KAB.MALANG STA 13+805 DENGAN STRUKTUR CABLE-STAYED

PROYEK AKHIR TERAPAN

Diajukan Untuk Memenuhi Salah Satu Syarat
Memperoleh Gelar Sarjana Sains Terapan
Pada
Program Sarjana Terapan
Departemen Teknik Infrastruktur Sipil
Fakultas Vokasi
Institut Teknologi Sepuluh Nopember
Surabaya
Surabaya, 20 Agustus 2020

Disusun Oleh :
MAHASISWA

Aulia Ulul Abshor
NRP. 10111610013002

Disetujui oleh Dosen Pembimbing Proyek Akhir :

DOSEN PEMBIMBING I	DOSEN PEMBIMBING II
Ir. Ibnu Pudji Rahardjo, MS	**Ir. Chomaedhi, CES. Geo**
NIP. 19600105 198603 1 003	**NIP. 19550319 198403 1 001**

“Halaman ini sengaja dikosongkan”

Berita Acara Sidang Proyek Akhir

Departemen Teknik Infrastruktur Sipil Fakultas Vokasi ITS
Semester Genap 2019-2020
Nomor BA :
Nomor Jadwal : 67

Program Studi : D4 Teknik Sipil (TRPPBS)
Diinput oleh : Deris Faisa R ST. MT.
Bahwa pada hari ini : Rabu, 12-Agt-2020 Pukul : 8:00 s/d 10:00
Di tempat : Online Meeting

Telah dilaksanakan sidang Proposal Tugas Akhir dengan judul:

PERENCANAAN ULANG STRUKTUR JEMBATAN UMBUL KAJI KAB.MALANG STA 13+805 DENGAN STRUKTUR CABLE-STAYED

Yang dihadiri dan dipresentasikan oleh mahasiswa :	(Hadir / Tidak Hadir)
10111610013002 AULIA ULUL ABSHOR	Hadir

	Yang dihadiri oleh dosen Pembimbing:	(Hadir / Tidak Hadir)
1	Ir. Ibnu Pudji Rahardjo, MS.	Hadir
2	Ir. Chomaedhi ,CES.	Hadir

	Yang dihadiri oleh dosen Penguji:	(Hadir / Tidak Hadir)
1	Mohamad Khoiri, ST., MT., Ph.D.	Hadir
2	Fitria Wahyuni, S.T., M.T	Hadir
3	Deris Faisa R ST. MT.	Hadir

Bahwasanya, musyawarah pembimbing dan penguji pada sidang proyek akhir ini memutuskan:

10111610013002 AULIA ULUL ABSHOR

LULUS, DENGAN REVISI MINOR

Catatan / revisi / masukan :

Mohamad Khoiri, ST., MT., Ph.D.

a SOP Perbaikan Jembatan
b Tambahi Metode pelaksanaan
c data SPT disertakan pd perhitungan tanah pd gambar pot memanjang jembatan
d Perjelas Pengaruh suhu terhadap stabilitas kabel
e
f

Fitria Wahyuni, S.T., M.T

a Gambar dilengkapi

b dimodelkan sprig vertikal

c Tambahkan tabel Summary perhitungan pd kesimpulan

d

e

f

Deris Faisa R ST. MT.

a Perbaiki Tata Tulis

b Tambahkan bangunan bawah pd BAB II

c Perbaiki Kesimpulan

d Tambahkan perhitungan dan gambar Plate bearing

e

f

Tindak lanjut :

Mahasiswa memperbaiki/merevisi Proyek Akhir sesuai dengan masukan di atas.

Penutup :

Demikian Berita Acara Sidang Proyek Akhir ini dibuat sebagai panduan revisi oleh Mahasiswa.

Lampiran :

Tempelkan screen capture peserta meeting online disini.

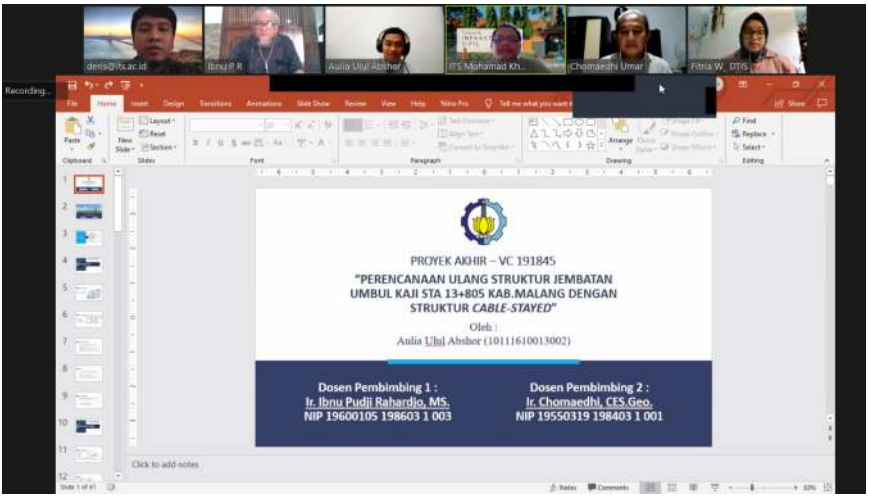

“PERENCANAAN ULANG STRUKTUR JEMBATAN UMBUL KAJI KAB.MALANG STA 13+805 DENGAN STRUKTUR *CABLE-STAYED*”

Mahasiswa	: Aulia Ulul Abshor
NRP	: 10111610013002
Departemen	: Teknik Infrastruktur Sipil FV-ITS
Dosen Pembimbing I	: Ir. Ibnu Pudji Rahardjo, MS
NIP	: 19600105 198603 1 003
Dosen Pembimbing II	: Ir. Chomaedhi, CES. Geo
NIP	: 19550319 198403 1 001

ABSTRAK

Jembatan Umbul Kaji merupakan jembatan yang berada pada jalan lintas selatan Kabupaten Malang pada Sta 13+805. Jembatan Umbul Kaji mempunyai panjang 120 meter yang di bagi menjadi 3 span dengan masing-masing span memiliki bentang 40 meter dan mempunyari lebar sebesar 9 meter yang akan dibangun dengan struktur Girder menggunakan material beton prategang. Permasalahan yang dihadapi pada jembatan ini adalah melewati jurang sedalam 30 meter, sehingga menyebabkan pilar jembatan terlalu tinggi, yang dikhawatirkan akan terjadi kegagalan pada pilar jembatan tersebut. Serta metode pelaksanaan yang tergolong sulit dikarenakan membuat 2 pilar yang berada pada jurang.

Dengan permasalahan tersebut muncul ide untuk merencanakan ulang struktur jembatan Umbul Kaji dengan konstruksi *Fan Pattern Cable-Stayed* dengan *Double Plane System*. Untuk gelagar direncanakan menggunakan *Steel Box-Girder* agar beban jembatan menjadi lebih ringan. Sedangkan pilar atau *pylon* menggunakan material beton dengan model Y terbalik yang berada pada salah satu ujung jembatan sehingga jembatan *cable-stayed* ini *asymmetric*. Kemudian akan dilakukan permodelan menggunakan program bantu CSI Bridge. Perencanaan ulang ini akan menggunakan Surat Edaran Menteri Pekerjaan Umum No. 08/SE/M/2015 tentang Pedoman

Perencanaan Teknis Jembatan Beruji Kabel, SNI 1725-2016 untuk pembebanan jembatan, SNI 2833-2013 terhadap beban gempa, dan RSNI-T-02-2004 untuk perencanaan struktur beton untuk jembatan.

Adapun hasil dari perencanaan ini adalah bangunan atas dan bangunan bawah. Untuk permodelan struktur utama menggunakan analisa dengan pembebanan statis dan dinamis, selanjutnya analisa metode pelaksanaan menggunakan metode *demolishing procedure* melalui *backward solution* dengan program bantu Csi Bridges.

Kata Kunci : Cable-Stayed, Fan Pattern, Jembatan, Steel Box, Struktur.

“RE-DESIGN STRUCTURE OF UMBUL KAJI BRIDGES MALANG STA 13+805 BY USING CABLE-STAYED STRUCTURE”

Student name	: Aulia Ulul Abshor
NRP	: 10111610013002
Departement	: Civil Infrastructure Engineering FV-ITS
Supervisor I	: Ir. Ibnu Pudji Rahardjo, MS
NIP	: 19600105 198603 1 003
Supervisor II	: Ir. Chomaedhi, CES. Geo
NIP	: 19550319 198403 1 001

ABSTRACT

Umbul Kaji Bridge is a bridge located on the southern crossing of Malang Regency at Sta 13 + 805. Umbul Kaji Bridge has a length of 120 meters which is divided into 3 spans with each span has 40 meters and a width of 9 meters, which will be built with a Girder structure using prestressed concrete material. The problem faced by this bridge is over a 30 meter deep cliff, it cause the bridge pillar to be too high, which is worried there will be a failure on the bridge pillar. And the method of implementation is quite difficult because it makes two pillars that are on a cliff.

With these problems arise idea for re-design the structure of the Umbul Kaji bridge with Fan Pattern Cable-Stayed construction with Double Plane System. For girder planned to use Steel Box Girder so that the bridge dead weight structure becomes lighter. While the pillar or pylon using inverted concrete Y model at one end of the bridge so that the bridge cable-stayed become asymmetric. And then there was modeling using CSI Bridge assist program. This re-design will use the circular of Minister of Public Work No.08/SE/M/2015 concerning the Cable Test Bridge Technical Planning Guidelines, SNI 1725-2016 for loading bridge, SNI 2833-2013 to earthquake loads, and RSNI-T-02-2004 for planning concrete structures for bridges.

The results of this plan are the upper and lower buildings. For modeling main structure use analysis with static and dynamic loading, then analyze the implementation method using the method demolishing procedure through backward solution with the CSI Bridges assistance program.

Keywords: Cable-Stayed, Fan Pattern, Bridge, Steel Box, Structure.

KATA PENGANTAR

Puji syukur penulis panjatkan atas kehadirat Allah SWT karena atas berkat rahmat dan karunia-Nya sehingga penulis dapat menyelesaikan proyek akhir dengan judul "Perencanaan Ulang Struktur Jembatan Umbul Kaji Kab.Malang STA 13+805 dengan Struktur *Cable-Stayed*".

Penulis dalam menyelesaikan Proyek Akhir ini tidak lepas dari bantuan, bimbingan dan dorongan dari berbagai pihak baik secara langsung maupun tidak langung. Oleh karena itu penulis mengucapkan banyak terimakasih kepada:

1. Kedua Orang tua penulis sebagai penyemangat terbesar bagi penulis, yang telah memberi dukungan moril dan materil terutama doanya.
2. Bapak Ir. Ibnu Pudji Rahardjo, MS dan Ir. Chomaedhi, CES. Geo, selaku dosen pembimbing yang telah memberikan bimbingan, arahan dan motivasi dalam menyusun proyek akhir ini.
3. Segenap Dosen dan Staf Departemen Teknik Infrastruktur Sipil, FV ITS.
4. Teman-teman yang telah memberikan semangat, dukungan, dan bantuan ketika penulis menghadapi permasalahan sehingga dapat menemukan solusi atas permasalahan yang dihadapi.
5. Dan pihak-pihak lain yang telah membantu penulis baik secara langsung maupun tidak langsung dalam pengerjaan Proyek Akhir ini.

Surabaya, Juli 2020

Aulia Ulul Abshor

10111610013002

“Halaman ini sengaja dikosongkan”

DAFTAR ISI

LEMBAR PENGESAHAN v
ABSTRAK vii
KATA PENGANTAR xi
DAFTAR ISI xii
DAFTAR TABEL xviii
DAFTAR GAMBAR xxii
BAB I PENDAHULUAN 1
1.1. Latar Belakang 1
1.2. Rumusan Masalah 3
1.3. Tujuan 4
1.4. Batasan Masalah 4
1.5. Manfaat 5
1.6. Peta Lokasi 6
BAB II TINJAUAN PUSTAKA 7
2.1. Umum 7
2.1.1. Jenis Jembatan Berdasarkan Fungsi, Lokasi, Bahan Konstruksi dan Tipe Struktur 7
2.2. Jembatan *Cable-Stayed* 9
2.2.1. Komponen Struktur Jembatan Cable Stayed 9
2.2.2. Komponen Kabel 10
2.2.3. Gelagar Utama (*Girder*) 17
2.2.4. Menara/ Pylon 19
2.3. Pembebanan Jembatan 20
2.3.1. Beban Permanen 20
2.3.2. Beban Lalu Lintas 22
2.3.3. Aksi Lingkungan 28
2.3.4. Kombinasi Pembebanan 33
2.4. Preliminary Design 34
2.4.1. Preliminary Design Lantai Kendaraan 34
2.4.2. Preliminary Design Kabel 34
2.4.3. Preliminary Design Pylon 38
2.5. Perhitungan Struktur 39
2.5.1. Perhitungan Struktur Baja 39

2.5.2. Perhitungan Struktur Beton 41
2.5.3. Perhitungan Bangunan Bawah 45
BAB III METODOLOGI 49
3.1. Bagan Alur Penulisan 49
3.2. Penjelasan Diagram Alur 51
3.2.1. Studi Literatur 51
3.2.2. Pengumpulan Data 52
3.2.3. Preliminary Design 54
3.2.4. Analisa Struktur Bangunan Atas 55
3.2.5. Kontrol Kekuatan Bangunan Atas 56
3.2.6. Perencanaan Bangunan Bawah 57
3.2.7. Kontrol Kekuatan Bangunan Bawah 57
3.2.8. Perencanaan Metode Pelaksanaan 58
3.2.9. Penggambaran Teknik 58
BAB IV PRELIMINARY DESIGN 59
4.1. Premilinary Design 59
4.1.1. Konfigurasi Susunan Kabel 59
4.1.2. Dimensi Gelagar Utama 61
4.1.3. Dimensi Gelagar Memanjang dan melintang 62
4.1.4. Dimensi Kabel dan Anker 63
4.1.5. Struktur *Pylon* 68
4.2. Perencanaan Sekunder 70
4.2.1. Perencanaan Pipa Sandaran 70
4.2.2. Perencanaan Tiang Sandaran 72
4.2.3. Perencanaan Pelat Lantai Kendaraan 77
BAB V STRUKTUR UTAMA 89
5.1. Gelagar Memanjang 89
5.1.1. Pembebanan 90
5.1.2. Perhitungan Momen 92
5.1.3. Kontrol Kekuatan Gelagar Sebelum Komposit 93
5.1.4. Kontrol Lendutan 96
5.1.5. Kontrol Geser 97
5.1.6. Kontrol Kekuatan Sesudah Komposit 98
5.1.7. Perhitungan *Shear Connector* 101
5.1.8. Pehitungan Sambungan Gelagar Memanjang 102

5.2. Gelagar Melintang 104
5.2.1. Pembebanan 105
5.2.2. Perhitungan Momen 107
5.2.3. Kontrol Kekuatan Sebelum Komposit 109
5.2.4. Kontrol Lendutan 111
5.2.5. Kontrol Geser 111
5.2.6. Kontrol Kekuatan Lentur Sesudah Komposit 112
5.2.7. Perhitungan Shear Connector 116
5.2.8. Perhitungan Sambungan Gelagar Melintang 117
5.3. Permodelan Struktur 119
5.3.1. Analisa Statik 121
5.3.2. Analisa Dinamik 126
5.3.3. Kombinasi Pembebanan 132
5.3.4. Pembebanan Kabel 133
5.3.5. Hasil Analisa Permodelan 139
5.3.6. Staging Analysis 141
5.3.7. Hasil Analisa 145
BAB VI GELAGAR UTAMA 151
6.1. Perencanaan Gelagar Utama 151
6.2. Hasil Analisa Struktur 152
6.2.1. Kontrol Kemampuan Penampang 152
6.2.2. Hasil Analisa Struktur saat Kabel Putus 158
6.2.3. Kontrol Kemampuan Penampang saat Kabel Putus 159
6.3. Sambungan Gelagar Utama 164
6.3.1. Sambungan Pelat Sayap 166
6.3.2. Sambungan Pelat Badan 166
BAB VII STRUKTUR PYLON 169
7.1. Spesifikasi Material dan Dimensi Pylon 169
7.1.1. Kelangsingan Pylon 170
7.2. Perencanaan Pylon Atas 172
7.2.1. Perbesaran Momen 172
7.2.2. Perhitungan Tulangan Longitudinal 173
7.2.3. Perhitungan Tulangan Transversal 176
7.2.4. Penulangan Torsi 180
7.3. Perencanaan Pylon Bawah 181

7.3.1. Perbesaran Momen 181
7.3.2. Perhitungan Tulangan Longitudinal 182
7.3.3. Perhitungan Tulangan Transversal 185
7.3.4. Penulangan Torsi 188
BAB VIII STRUKTUR KABEL 193
8.1. Data Perencanaan 193
8.2. Gaya Tarik Kabel 194
8.3. Analisa Penampang Kabel 196
8.4. Perhitungan Angkur pada Gelagar 197
8.5. Perhitungan Angkur pada *Pylon* 202
BAB IX PERENCANAAN BANGUNAN BAWAH 207
9.1. Perencanaan Abutmen A1 207
9.1.1. Pembebanan Abutmen A1 208
9.1.2. Kontrol Stabilitas 210
9.1.3. Penulangan Abutmen A1 211
9.1.4. Analisa Pondasi 216
9.2. Perencanaan Abutmen A2 221
9.2.1. Pembebanan Abutmen A2 222
9.2.2. Kontrol Stabilitas 223
9.2.3. Penulangan Abutmen A2 224
9.2.4. Analisa Pondasi 230
9.3. Perencanaan Block Angkur 232
9.3.1. Gaya – gaya yang bekerja 232
9.3.2. Kontrol gaya yang terjadi 233
9.3.3. Penulangan Block Angkur 234
9.3.4. Analisa Pondasi 235
9.4. Desain Perletakan 237
9.4.1. Desain Pot Bearing 237
BAB X METODE PELAKSANAAN DAN PEMELIHARAAN 239
10.1. Umum 239
10.2. Metode Pelaksanaan 239
10.2.1. Bangunan Bawah 239
10.2.2. Metode Pelaksanaan Bangunan Atas 240
10.3. Metode Pemeliharaan 244

BAB XI KESIMPULAN 249
11.1. Kesimpulan 249
11.2. Saran 252
DAFTAR PUSTAKA 255
BIODATA PENULIS 257
LAMPIRAN 259

“Halaman ini sengaja dikosongkan”

DAFTAR TABEL

Tabel 2. 1 Jenis-Jenis Kabel (08/SE/M/2015) 13
Tabel 2. 2 Berat Isi Material Untuk Jembatan (SNI 1725-2016) 21
Tabel 2. 3 Faktor beban untuk beban permanen(SNI 1725-2016) 22
Tabel 2. 4 Faktor Beban Untuk Beban Mati Tambahan(SNI 1725-2016) 22
Tabel 2. 5 Ketentuan Jumlah Lajur Jembatan(SNI 1725-2016) .. 23
Tabel 2. 6 Faktor Beban Untuk Beban Lajur "D" (SNI 1725-2016) 24
Tabel 2. 7 Faktor Beban Untuk Beban Truk "T" (SNI 1725-2016) 25
Tabel 2. 8 Nilai V_0 Dan Z_0 Untuk Berbagai Variasi Kondisi Pemukaan Hulu(SNI 1725-2016) 29
Tabel 2. 9 Tekanan Angin Dasar(SNI 1725-2016) 29
Tabel 2. 10 Kombinasi Pembebanan (SNI 1725-2016) 33
Tabel 2. 11 Sifat Mekanis Baja Struktural(RSNI T-03-2005) 39
Tabel 2. 12 Faktor Panjang Efektif(SNI T-12-2004) 42
Tabel 2. 13 Sudut Geser Berbagai Material (SNI 1725-2016) 46
Tabel 3. 1 Data tanah N-SPT 53
Tabel 4. 1 Mutu Kabel 63
Tabel 4. 2 Perhitungan Jumlah Strand Kabel S 66
Tabel 4. 3 Perhitungan Jumlah Strand Kabel B 67
Tabel 4. 4 Rekapitulasi Gaya Yang Bekerja Pada Pylon 68
Tabel 4. 5 Nilai V0 dan Z0 (SNI 1725-2016) 78
Tabel 4. 6 Tekanan angin dasar (SNI 1725-2016) 79
Tabel 4. 7 Rekapitulasi Momen pada Tumpuan 81
Tabel 4. 8 Rekapitulasi Momen pada Lapangan 82
Tabel 5. 1 Rekapitulasi Beban 92
Tabel 5. 2 Garis Netral Penampang Komposit 100
Tabel 5. 3 Momen Inersia Penampang 100
Tabel 5. 4 Rekapitulasi Beban 107
Tabel 5. 5 Sumbu Netral Penampang Komposit 115
Tabel 5. 6 Momen Inersia Penampang 115

Tabel 5. 7 Nilai V_0 dan Z_0 untuk variasi kondisi permukaan hulu (SNI 1725-2016) 123
Tabel 5. 8 Tekanan Angin Dasar(SNI 1725-2016) 124
Tabel 5. 9 Sifat bahan rata-rata akibat pengaruh temperatur(SNI 1725-2016) 125
Tabel 5. 10 Temperatur jembatan rata-rata nominal(SNI 1725-2016).....125
Tabel 5. 11 Kelas Situs (SNI 2833-2016) 127
Tabel 5. 12 Faktor Amplifikasi untuk PGA dan 0,2 Detik (SNI 2833-2016) 128
Tabel 5. 13 Nilai Faktor Amplifikasi untuk Periode 1 Detik (F_v) (SNI 2833-2016) 128
Tabel 5. 14 Spektrum Respon Desain di Permukaan Tanah 131
Tabel 5. 15 Kombinasi Pembebanan Analisa Statik 132
Tabel 5. 16 Kombinasi Beban Analisa Dinamik.....133
Tabel 5. 17 Gaya Tarik Tendon S Tahap Awal.....134
Tabel 5. 18 Gaya Tarik Tendon B Tahap Awal 135
Tabel 5. 19 Gaya Tarik Tendon S Tahap Akhir 137
Tabel 5. 20 Gaya Tarik Tendon B Tahap Akhir.....138
Tabel 5. 21 Hasil Analisa Struktur *Steel Box* Girder.....139
Tabel 5. 22 Hasil Analisa Struktur Pylon Atas.....139
Tabel 5. 23 Hasil Analisa Struktur Pylon Bawah.....140
Tabel 5. 24 Spesifikasi *Form Traveler*.....141
Tabel 5. 25 Konfigurasi Beban Saat *Staging Analysis*.....143
Tabel 6. 1 Gaya Dalam pada Gelagar Utama.....152
Tabel 6. 2 Gaya Dalam Gelagar Utama Saat Kabel Putus 158
Tabel 8. 1 Gaya Tarik Tahap Awal 194
Tabel 8. 2 Gaya Tarik Tahap Akhir 195
Tabel 8. 3 Kebutuhan Luas Penampang yang sebenarnya 196
Tabel 8. 4 Kontrol Kemampuan kabel dari As_{pakai} 197
Tabel 8. 5 Spesifikasi Teknis *Stressing* Angkur VSL SSI 2000198
Tabel 8. 6 Perhitungan Angkur 200
Tabel 8. 7 Spesifikasi Teknis *Fixed* Angkur VSL SSI 2000.....203
Tabel 8. 8 *Clearences* pada *Pylon*.....203
Tabel 8. 9 Kebutuhan Tulangan Daerah Pengangkuran.....205

Tabel 9. 1 Perhitungan Beban Mati Abutmen A1 208
Tabel 9. 2 Nilai Spring Abutmen A1 217
Tabel 9. 3 Perhitungan Daya Dukung Tiang Abutmen A1 219
Tabel 9. 4 Perhitungan Beban Mati Abutmen A2 222
Tabel 9. 5 Nilai Spring Abutmen A2 231
Tabel 9. 6 Perhitungan Daya Dukung Tiang Abutmen A2 231
Tabel 9. 7 Gaya Tarik Kabel Pada Angkur 232
Tabel 9. 8 Gayah Tarik Kabel Angkur Arah Horizontal 233
Tabel 9. 9 Nilai Spring pada pondasi Block Angkur.....235
Tabel 9. 10 Perhitungan Daya Dukung Tiang Block Angkur ...236
Tabel 9. 11 Spesifikasi Teknis Pot Bearing.....238
Tabel 11. 1 Rekapitulasi Gaya 251

“Halaman ini sengaja dikosongkan”

DAFTAR GAMBAR

Gambar 1. 1 (a) Rencana struktur *cable-stayed*, (b) Jembatan Umbul Kaji eksisting. 3
Gambar 1. 2 Peta Lokasi 6
Gambar 2. 1 Sistem Satu Bidang (*One-Plane Bridge*) 10
Gambar 2. 2 Sistem Dua Bidang (*Two-Plane Bridge*) 11
Gambar 2. 3 Sistem Tiga Bidang (*Three-Plane Bridge*) 11
Gambar 2. 4 Konfigurasi Ruji Kabel Longitudinal 12
Gambar 2. 5 (a)*Wire Stay Cable*, (b)*Strand Stay Sable* 14
Gambar 2. 6 (a)Angkur Mati, (b)Angkur Hidup 15
Gambar 2. 7 Alternatif Pengangkuran Pada Menara 16
Gambar 2. 8 Lokasi Angkur Pada Dek Jembatan 16
Gambar 2. 9 Gelagar Solid Web Baja 17
Gambar 2. 10 Macam-Macam Trusses 18
Gambar 2. 11 Macam-Macam Concrete Girder 19
Gambar 2. 12 Bentuk Dasar Menara/*Pylon* Jembatan Cable-Stayed 20
Gambar 2. 13 Beban Lajur “D” 25
Gambar 2. 14 Konfigurasi Beban Truk “T” 26
Gambar 2. 15 Faktor Beban Dinamis Untuk “T” Untuk Pembebanan Lajur “D” 27
Gambar 2. 16 Notasi Gaya Pada Kabel Angkur 36
Gambar 2. 17 Gaya Di Puncak Menara Jembatan Cable-Stayed 38
Gambar 3. 1 Bagan Alur Metodologi Perencanaan Jembatan 51
Gambar 3. 2 Layout Plan dan Potongan Memanjang Jembatan .. 53
Gambar 3. 3 Metode Pelaksanaan Kantilever 58
Gambar 4. 1 Potongan Memanjang Jembatan 60
Gambar 4. 2 Susunan Kabel Arah Melintang Berupa Tipe Ganda 61
Gambar 4. 3 *Steel Box Girder* 62
Gambar 4. 4 Ilustrasi Gaya pada Pylon 68
Gambar 4. 5 Hasil Preliminary *Pylon* 69
Gambar 4. 6 Beban pada Pipa Sandaran dan Profil Pipa Sandaran 70
Gambar 4. 7 Rencana Tiang Sandaran 73

Gambar 4. 8 Penulangan Tiang Sandaran 77
Gambar 4. 9 Lantai Kendaraan.....77
Gambar 4. 10 Detail Bondek.....82
Gambar 4. 11 Distribusi Geser Pons 87
Gambar 5. 1 Detail Gelagar Memanjang (mm).....89
Gambar 5. 2 Model Perhitungan Beban Mati.....90
Gambar 5. 3 Model Perhitungan Beban Hidup 91
Gambar 5. 4 Titik Momen Pada Gelagar.....95
Gambar 5. 5 Distribusi Tegangan Plastis 98
Gambar 5. 6 Gelagar Komposit.....99
Gambar 5. 7 Detail Sambungan Gelagar Memanjang.....103
Gambar 5. 8 Detail Sambungan Gelagar Memanjang ke Melintang 103
Gambar 5. 9 Detail Gelagar Melintang 104
Gambar 5. 10 Beban Mati Sebelum Komposit.....105
Gambar 5. 11 Beban Setelah Komposit 106
Gambar 5. 12 Pembebanan akibat BTR dan BGT 108
Gambar 5. 13 Pembebanan Truk Kondisi 1 108
Gambar 5. 14 Pembebanan Truk Kondisi 2 109
Gambar 5. 15 Distribusi Tegangan Plastis 113
Gambar 5. 16 Sumbu Netral.....114
Gambar 5. 17 Sambungan Gelagar Melintang 118
Gambar 5. 18 Sambungan Gelagar Melintang pada Box Girder 119
Gambar 5. 19 Tampak Perspektif Jembatan.....119
Gambar 5. 20 Tampak Memanjang Jembatan.....120
Gambar 5. 21 Tampak Atas Jembatan.....120
Gambar 5. 22 Tampak Melintang Jembatan.....120
Gambar 5. 23 Data Tanah Untuk Menentukan Jenis Tanah.....126
Gambar 5. 24 Peta Percepatan Puncak di Batuan Dasar (PGA) untuk Probabilitas Terlampaui 7% dalam 75 Tahun 129
Gambar 5. 25 Peta Respon Spektra Percepatan 0.2 Detik di Batuan Dasar untuk Probabilitas Terlampaui 7% dalam 75 Tahun.....129
Gambar 5. 26 Peta Respon Spektra Percepatan 1 Detik di Batuan Dasar untuk Probabilitas Terlampaui 7% dalam 75 Tahun.....130

Gambar 5. 27 Grafik Response Spectrum 132
Gambar 5. 28 Form Traveler 142
Gambar 5. 29 Segmen Deck saat Pengangkatan (mm) 142
Gambar 5. 30 Dimensi Form Traveler (mm)..... 143
Gambar 5. 31 Input Beban Pada *Form Traveler* 144
Gambar 5. 32 Hasil Analisa Reaksi Untuk *Form Traveler* 144
Gambar 5. 33 Permodelan saat Construction Stage 0 (CS 0).... 145
Gambar 5. 34 Permodelan saat Construction Stage 1 (CS 1).... 145
Gambar 5. 35 Permodelan saat Construction Stage 2 (CS 2).... 145
Gambar 5. 36 Permodelan saat Construction Stage 3 (CS 3).... 146
Gambar 5. 37 Permodelan saat Construction Stage 4 (CS 4).... 146
Gambar 5. 38 Permodelan saat Construction Stage 5 (CS 5).... 146
Gambar 5. 39 Permodelan saat Construction Stage 6 (CS 6).... 147
Gambar 5. 40 Permodelan saat Construction Stage 7 (CS 7).... 147
Gambar 5. 41 Permodelan saat Construction Stage 8 (CS 8).... 147
Gambar 5. 42 Permodelan saat Construction Stage 9 (CS 9).... 148
Gambar 5. 43 Permodelan saat Construction Stage 10 (CS 10) 148
Gambar 5. 44 Permodelan saat Construction Stage 11 (CS 11) 148
Gambar 5. 45 Permodelan saat Construction Stage 12 (CS 12) 149
Gambar 5. 46 Permodelan saat Construction Stage 13 (CS 13) 149
Gambar 5. 47 Permodelan saat Construction Stage 13 (CS 13) 149
Gambar 6. 1 Detail Gelagar Utama (satuan dalam mm) 151
Gambar 6. 2 Penampang Steel Box..... 155
Gambar 6. 3 Asumsi 1 Kabel Putus 158
Gambar 6. 4 Tampak Melintang Sambungan Box 167
Gambar 6. 5 Sambungan Gelagar Utama pada Badan 168
Gambar 6. 6 Sambungan Gelagar Utama pada Sayap..... 168
Gambar 7. 1 Penampang Pylon (satuan dalam cm)..... 169
Gambar 7. 2 Pylon Atas(kiri), Pylon Bawah(kanan)..... 170
Gambar 7. 3 Properties Pylon Atas 171
Gambar 7. 4 Properties Pylon Bawah 171
Gambar 7. 5 Permodelan *Pylon* Atas Pada Spcolumn 174
Gambar 7. 6 Diagram Interaksi Mx-My Pylon Atas Spcolumn 175
Gambar 7. 7 Diagram Interaksi P-M Pylon Atas spColumn 176
Gambar 7. 8 Penulangan *Pylon* Atas..... 180

Gambar 7. 9 Permodelan *Pylon* Bawah Pada Spcolumn.....182
Gambar 7. 10 Diagram Interaksi Mx-My *Pylon* Bawah Spcolumn 184
Gambar 7. 11 Diagram Interaksi P-M *Pylon* Bawah spColumn184
Gambar 7. 12 Penulangan *Pylon* Bawah.....191
Gambar 8. 1 Penamaan dan Penomoran Kabel 194
Gambar 8. 2 Detail *Stressing* Angkur VSL SSI 2000 198
Gambar 8. 3 Pelat Angkur pada *Steel Box* 200
Gambar 8. 4 Detail *Fixed* Angkur VSL SSI 2000.....202
Gambar 8. 5 Angkur Pada *Pylon*.....202
Gambar 9. 1 Dimensi Abutmen A1.....207
Gambar 9. 2 Dimensi Wingwall A1.....207
Gambar 9. 3 Ilustrasi Tekanan Tanah aktif 209
Gambar 9. 4 Data Tanah pada Bore Hole BH-1.....216
Gambar 9. 5 Dimensi Abutmen A2.....221
Gambar 9. 6 Dimensi Wingwall A2.....221
Gambar 9. 7 Data Tanah Bore Hole BH-3 230
Gambar 9. 8 Dimensi Block Angkur.....232
Gambar 9. 9 Layout Penempatan Perletakan 237
Gambar 9. 10 *Fixed Pot Bearing*.....237
Gambar 10. 1 Ilustrasi Bore Pile 239
Gambar 10. 2 Ilustrasi Abutment Dan Block Angkur.....240
Gambar 10. 3 Ilustrasi Pylon.....240
Gambar 10. 4 Ilustrasi Fabrikasi Segmen.....241
Gambar 10. 5 Ilustrasi Pengangkatan Segmen Pertama.....241
Gambar 10. 6 Ilustrasi Pengangkatan Segmen Kedua.....242
Gambar 10. 7 Ilustrasi Pemasangan Segmen 242
Gambar 10. 8 Ilustrasi Kabel yang Terpasang 243
Gambar 10. 9 Ilustrasi Pemasangan Bondek dan Shear Connector 243
Gambar 10. 10 Ilustrasi Penulangan Segmen.....244
Gambar 10. 11 Ilustrasi Segmen yang sudah dicor 244
Gambar 10. 12 Mengatur *winch* untuk mengangkat dan menurunkan kabel 245
Gambar 10. 13 Memasang *pulley*.....245

Gambar 10. 14 Memasang Kabel Penggantung Sementara (*Temporary Stay*).....246
Gambar 10. 15 Melepas Soket Girder.....246
Gambar 10. 16 Penurunan dan Penggantian Kabel.....247
Gambar 10. 17 Pemasangan Kabel yang Baru.....247

“Halaman ini sengaja dikosongkan”

BAB I
PENDAHULUAN

1.1. Latar Belakang

Jembatan merupakan suatu infrastuktur penunjang sarana transportasi yang terputus oleh adanya rintangan tanpa menutup rintangan antara lain sungai, jurang, lembah, laut, selat, jalan raya maupun jalan kerata api. Dalam perencanaan tidak hanya meninjau dari segi struktural tetapi juga memperhitungkan segi arsitektural atau nilai estetika.

Jembatan Umbul Kaji merupakan jembatan yang berada pada rencana jalan lintas selatan Kabupaten Malang tepatnya berada pada Sta 13+805. Pembangunan jalan lintas selatan bertujuan untuk meningkatkan pemerataan kesejahteraan masyarakat wilayah selatan sehingga mampu mengejar ketertinggalan dengan wilayah Utara. Selain itu, untuk membuka potensi kawasan-kawasan obyek wisata, sehingga mampu menumbuhkan kegiatan ekonomi kerakyatan.

Jembatan Umbul Kaji mempunyai panjang 120 meter yang di bagi menjadi 3 span dengan masing-masing span memiliki bentang 40 meter dan mempunyai lebar sebesar 9 meter yang akan dibangun dengan struktur Girder menggunakan material beton prategang. Permasalahan yang dihadapi pada jembatan ini adalah melewati jurang sedalam 30 meter, sehingga menyebabkan pilar jembatan terlalu panjang, yang dikhawatirkan akan terjadi kegagalan pada pilar jembatan tersebut. Serta metode pelaksanaan yang tergolong sulit dikarenakan membuat 2 pilar yang berada pada jurang.

Dengan permasalahan tersebut muncul ide untuk merencanakan ulang struktur jembatan Umbul Kaji dengan konstruksi *Cable-Stayed* (lihat gambar 1.1) dengan spesifikasi sebagai berikut :

- Struktur *pylon* dengan material beton bertulang (*Double-plane system)* tipe Y-terbalik yang berada pada salah satu ujung jembatan.
- Bentang jembatan 120 meter.
- Gelagar jembatan menggunakan *Steel Box Girder*.
- Konfigurasi kabel menggunakan tipe *Fan Pattern.*

Alasan pemilihan *cable-stayed* sebagai struktur jembatan Umbul Kaji diantaranya adalah:

- Mempermudah pelaksanaan dilapangan,
- Menghilangkan pilar yang berada pada jurang,
- Unsur estetika yang indah pada struktur *cable-stayed.*
- Dipilih *Double-plane system* karena pada rencana awal jembatan tidak memiliki median jalan.
- Penggunaan *Steel-box girder* supaya beban mati jembatan menjadi lebih ringan.
- Karena hanya menggunakan satu pylon pada ujung jembatan dipilih *Fan pattern* agar tidak memerlukan pylon yang terlalu tinggi.

Pelaksanaan menjadi lebih mudah karena tidak diperlukan pilar pada jurang. Selain menghilangkan pilar pada jurang, penerapan system *cable-stayed* juga akan mengurangi tinggi dek jembatan. Dek jembatan yang digunakan dalam rencana Jembatan Umbul Kaji pada bentang dengan sistem *girder* menggunakan material beton prategang I shape (PCI). Tinggi *girder* tersebut adalah 2.5 meter. Dalam pasal 4.6.2 peraturan PU nomor 08/SE/M/2015 dijelaskan kisaran tinggi *girder* untuk jembatan *cable-stayed* adalah 1/50 sampai dengan 1/70 dari panjang bentang utama. Dari segi estetika, jembatan *cable-stayed* memiliki estetika yang sangat indah jika dibandingkan dengan tipe-tipe jembatan yang lain. Dengan demikian nilai pariwisata pada wilayah akan meningkat. Sehingga selain untuk prasarana transportasi, jembatan

tersebut juga dapat dijadikan *landmark* kabupaten Malang yang akan mengundang wisatawan.

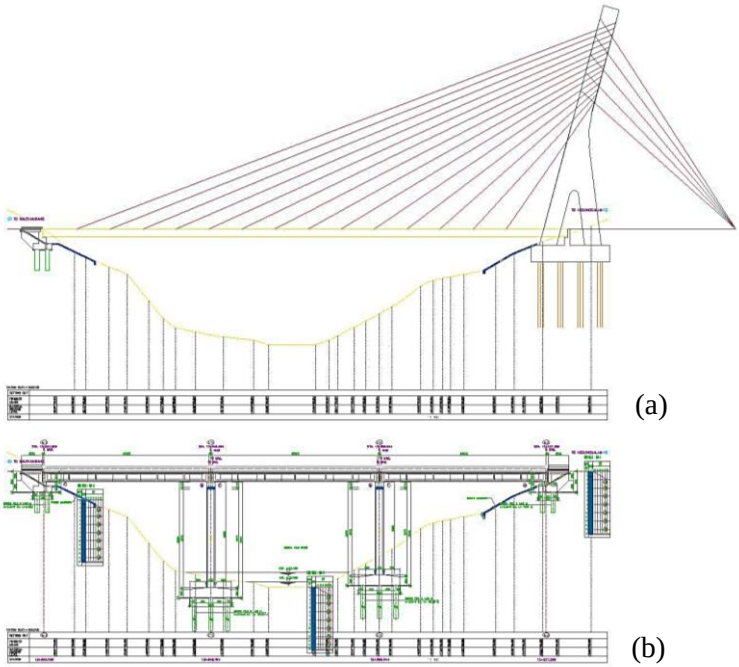

Gambar 1. 1 (a) Rencana struktur *cable-stayed*, (b) Jembatan Umbul Kaji eksisting.

1.2. Rumusan Masalah

Berdasarkan latar belakang permasalahan diatas, maka diajukan rumusan masalah yaitu :

1. Bagaimana merencanakan bangunan atas jembatan *cable-stayed*?
2. Bagaimana merencanakan bangunan bawah jembatan *cable-stayed*?
3. Bagaimana pembebanan pada jembatan *cable-stayed*?

4. Bagaimana permodelan struktur jembatan *cable-stayed* menggunakan program bantu CSI Bridge?
5. Bagaimana Analisa stabilitas struktur jembatan *cable-stayed* ?
6. Bagaimana analisa pelaksanaan dan pemeliharaan jembatan *cable-stayed*?
7. Bagaimana penggambaran hasil desain struktur jembatan *cable-stayed?*

1.3. Tujuan

Adapun tujuan yang diharapkan dari penyusunan proyek akhir ini adalah :

1. Dapat merencanakan bangunan atas jembatan *cable-stayed*
2. Dapat merencanakan bangunan bawah jembatan *cable-stayed*.
3. Mengetahui pembebanan yang digunakan pada jembatan *cable-stayed*.
4. Dapat memodelkan dan menganalisa jembatan pada program bantu CSI Bridge.
5. Dapat menganalisa stabilitas struktur jembatan *cable-stayed*.
6. Dapat menganalisa pelaksanaan dan pemeliharaan jembatan *cable-stayed*.
7. Dapat menuangkan hasil desain struktur kedalam bentuk gambar kerja.

1.4. Batasan Masalah

Untuk membatasi dan menghindari penyimpangan pembahasan dari masalah yang diuraikan diatas, maka Batasan masalah sebagi berikut :

1. Perencanaan jembatan hanya meninjau struktur saja (tanpa meninjau pembahasan Analisa biaya dan manajemen konstruksi)

2. Tidak memperhitungkan kondisi waktu pelaksanaan
3. Tidak memperhitungkan saluran drainase jembatan, dan perkerasan jalan.
4. Perhitungan sambungan dibatasi pada bagian-bagian tertentu yang dianggap mewakili secara keseluruhan.
5. Tidak meninjau analisa stabilitas Aeordinamis

1.5. Manfaat

Manfaat yang didapat dari laporan proyek akhir ini adalah:

1. Menjadi Referensi dalam perencanaan jembatan *cable-stayed*.
2. Pembaca dapat mengetahui hal-hal yang harus diperhatikan dalam perencanaan jembatan. Sehingga kegagalan struktur pada jembatan dapat berkurang di masa depan.
3. Sebagai alternative desain struktur jembatan yang menggunakan *cable-stayed* dengan medan yang cukup sulit.

1.6. Peta Lokasi

Berikut adalah peta lokasi Perencanaan Ulang dari Jembatan Umbul Kaji Kab.Malang. Dapat dilihat pada Gambar 1.2.

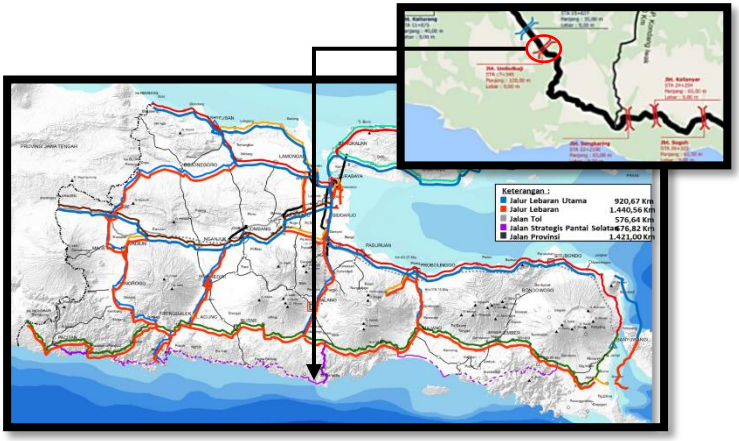

Gambar 1. 2 Peta Lokasi

BAB II
TINJAUAN PUSTAKA

2.1. Umum

Jembatan merupakan prasarana transportasi yang penting, jembatan digunakan oleh manusia untuk melewati rintangan dan menuju ke suatu tempat di seberang rintangan tersebut. Manusia mulai menggunakan jembatan sejak zaman purba, dulu pertama kali yang digunakan manusia adalah berupa jembatan alami, seperti pohon tumbang yang melintasi rintangan (jembatan balok sederhana) (Ma'arif, 2012). Seiring dengan perkembangan zaman, teknologi struktur jembatan terus mengalami kemajuan yang pesat

Jembatan adalah suatu bangunan yang memungkinkan suatu jalan menyilang sungai/saluran air, lembah atau menyilang jalan lain yang tidak sama tinggi permukaannya. Dalam perencanaan dan perancangan jembatan sebaiknya mempertimbangkan fungsi kebutuhan transportasi, persyaratan teknis dan estetika-arsitektural yang meliputi : Aspek lalu lintas, Aspek teknis, Aspek estetika (Supriyadi & Muntohar, 2007)

Jembatan beruji kabel menjadi salah satu alternatif dalam pembangunan jembatan bentang panjang. Ruji kabel adalah kabel eksternal dengan dwi fungsi. Ruji kabel berfungsi sebagai elemen struktur penyangga dalam pemasangan gelagar lantai dengan sistem kantilever bertahap (construction stages) dan sebagai elemen utama struktur serta perletakan elastis/pegas atau pilar antara dalam struktur akhir. Jembatan dengan sistem beruji kabel merupakan jembatan yang terdiri dari satu atau lebih menara/menara dengan susunan kabelyang memikul gelagar lantai. (Kementerian Pekerjaan Umum, 2015)

2.1.1. Jenis Jembatan Berdasarkan Fungsi, Lokasi, Bahan Konstruksi dan Tipe Struktur

sekarang ini telah mengalami perkembangan pesat sesuai dengan kemajuan jaman dan teknologi, mulai dari yang sederhana

sampai pada konstruksi yang mutakhir.Berdasarkan fungsinya, jembatan dapat dibedakan sebagai berikut :

- Menurut Kegunaan
    1. Jembatan jalan raya (higway bridge)
    2. Jembatan pejalan kaki (footh path)
    3. Jembatan kereta api (railway bridge)
    4. Jembatan jalan air
    5. Jembatan penyebrangan
- Menurut Jenis Materialnya
    1. Jembatan jalan raya (highway bridge)
    2. Jembatan kayu
    3. Jembatan baja
    4. Jembatan beton bertulang dan pratekann
    6. Jembatan komposit
- Menurut Sistem Struktur
    1. Jembatan dengan tumpuan sederhana (simply
    2. supported bridge)
    3. Jembatan menerus (continuous bridge)
    4. Jembatan kantilever (cantilever bridge)
    5. Jembatan integral (integral bridge)
    7. Jembatan semi integral (semi integral bridge)
    8. Jembatan pelengkung tiga sendi (arches bridge)
    9. Jembatan rangka (trusses bridge)
    10. Jembatan gantung (suspension bridge)
    11. Jembatan kabel (cable stayed bridge) ,
    12. (Extradosed Bridge)
    13. Jembatan urung-urung (culverts bridge)
- Menurut Panjang Bentangnya (Barker & Puckett, 2013)
    1. Small-Span Bridge (< 15 m)
    2. Medium-Span Bridge (< 75 m)
    3. Large-Span Bridge (50 m – 150 m)
    4. Extra Large Span-Bridge (> 150 m)

2.2. Jembatan *Cable-Stayed*

Jembatan cable-stayed (beruji kabel) adalah struktur yang mempunyai sederetan kabel lurus dan memikul elemen horizontal kaku (berupa balok, rangka, atau box). Jembatan cable-stayed terdiri dari sistem struktur berupa gelagar menerus yang didukung oleh tumpuan berupa kabel yang dibentangkan miring dan dihubungkan ke menara sebagai penahan utama. (**Kementerian Pekerjaan Umum, 2015**).

Sistem yang digunakan jembatan cable stayed merupakan salah satu inovasi teknologi yang menggunakan kabel yang membuktikan semakin berkembangnya inovasi yang telah dilakukan oleh para arsitek dan para insinyur. Dalam sistem cable stayed memiliki keuntungan tersendiri antara lain karakteristik-karekteristik secara struktural, efesiensi, dan pengaplikasian yang sangat luas. Selain itu juga, system tersebut menghadirkan suatu sistem ruang yang terdiri dari balok-balokpengaku (stiffening girder) dan lantai jembatan baja atau beton.

Jembatan cable stayed ini memiliki ciri khas sendiri dengan satu atau dua tiang (pylon) yang berdiri di atas pier (pilar) di tengah-tengah bentang. Kabel yang terpasang secara diagonal untuk girder untuk memberikan dukungan tambahan dan bentuk pylon pemikul beban utama struktu dalam hal jembatan kabel. (Olfat S, 2012).

2.2.1. Komponen Struktur Jembatan Cable Stayed

Sistem cable-stayed pada jembatan dapat diartikansebagai sebuah sistem struktur yang terdiri dari dek orthotropicdan girder menerus yang diikat oleh incline cable dan didistribusikan ke menara yang terletak pada pilar utama (Troitsky, 1988). Jembatan cable-stayed terdiri dari elemenelemen utama yang berupa gelagar atau girder, kabel, dan Menara yang disebut pylon pada superstructure serta abutmen dan pondasi sebagai komponen bangunan bawah jembatan. Prinsip jembatan cable-stayed teridiri dari segmen-segmen gelagar yang disusun menjadi lantai

kendaraan, di mana gelagar dihubungkan dan disokong oleh kabel-kabel. Ujung-ujung lain dari kabel akan diangker pada satu titik atau lebih pada menara yang menumpu pada pondasi. Kabel-kabel tersebut berperilaku sebagai struktur tarik karena menahan beban pada dek jembatan. Sedangkan menara/pylon berperan sebagai struktur tekan akibat gaya-gaya yang disalurkan oleh kabel-kabel.

2.2.2. Komponen Kabel

Pada struktur jembatan cable-stayed, kabel merupakan salah satu komponen utama. Dimana kabel berfungsi memikul dek beserta beban lalu lintas diatasnya dan kemudian menyalurkan beban-beban tersebut ke menara. Dalam desain struktur kabel sendiri, penempatan atau konfigurasi kabel memegang peranan penting. Penentuan konfigurasi dan jumlah kabel-kabel tersebut didasarkan atas berbagai hal, diantaranya adalah panjang bentang, jenis beban, jumlah lajur atau lebar jembatan, tinggi menara, dan estetika. (Troitsky, 1988)

- **Susunan kabel berdasarkan tatanan kabel transversal**
  1) Sistem satu bidang

Sistem ini sangat menguntungkan dari segi estetika karena tidak terjadi kabel bersilangan yang terlihat oleh pandangan sehingga terlihat penampilan struktur yang indah (Walther, 1999). Dengan sistem satu bidang maka kabel akan diletakkan pada tengah-tengah bentang dek yang mengakibatkan torsi yang besar. Tipe jembatan ini tidak sesuai untuk jembatan dengan dua jalur (Walther, 1999). Dapat dilihat pada Gambar 2.1.

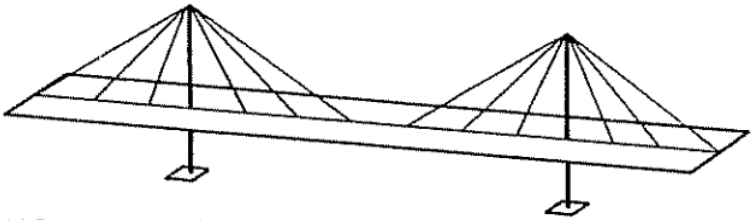

Gambar 2. 1 Sistem Satu Bidang (*One-Plane Bridge*)

2) Sistem dua bidang

Penggantung dengan dua bidang dapat berupa dua bidang vertical sejajar atau bidang miring. Pada ujung balok melintng dimana akan dipasang anker kabel, kemungkinan akan terjadi kesulitan pada pendetailan konstruksi apabila terjadi berbenturan antara anker kabel pada dek dengan prategang melintang (Walther, 1999). Dapat dilihat pada Gambar 2.2.

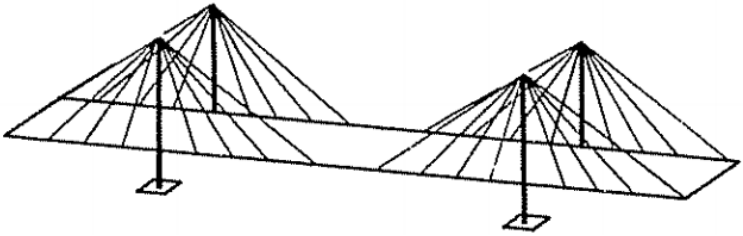

Gambar 2. 2 Sistem Dua Bidang (*Two-Plane Bridge*)

3) Sistem tiga bidang

Pada jembatan yang memiliki bentang yang sangat lebar akan membutuhkan jalur lalu lintas yang banyak, akan ditemukan torsi yang besar bila menggunkan kabel satu bidang dan momen lentur yang besar pada tengah balok melintang jika menggunakan sistem dua bidang. Hal tersebut mengakibatkan gelagar yang sangat besar dan tidak ekonomis lagi. Dengan menggunakan tiga bidang dapat mengurangi torsi, momen lentur, dan gaya geser yang berlebihan (Walther, 1999). Dapat dilihat pada Gambar 2.3.

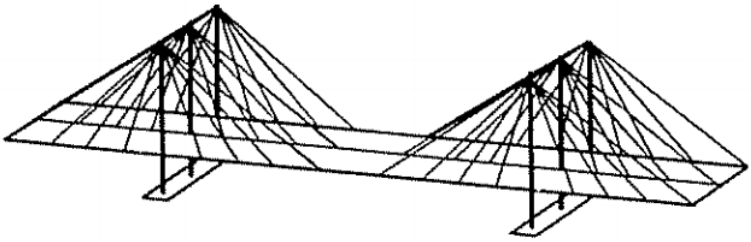

Gambar 2. 3 Sistem Tiga Bidang (*Three-Plane Bridge*)

- **Susunan kabel berdasarkan tatanan kabel longitudinal**

Kabel yang digunakan memencar dari menara, ke sisi luar dan dalam jembatan. Pemencaran kabel dari puncak menara dapat dipilih beberapa cara pengaturan letak kabel arah memanjang jembatan, antara lain seperti ditampilkan pada Gambar 2.4 di bawah ini.

a) Kabel Tunggal (Mono);
b) Bentuk Sejajar (Harp);
c) Bentuk Kipas (Fan);
d) Bentuk Bintang (Star)

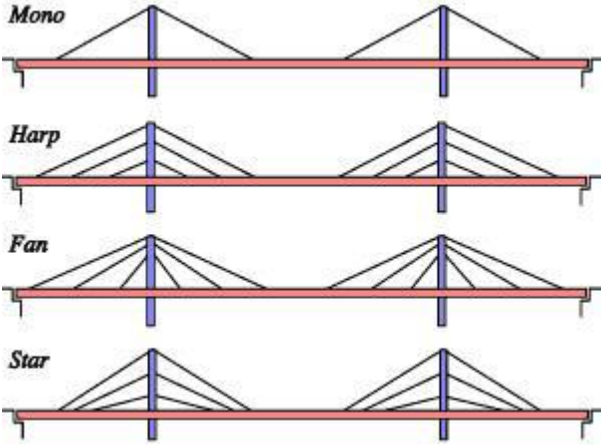

Gambar 2. 4 Konfigurasi Ruji Kabel Longitudinal

Bentuk radial seperti bentuk tunggal dan kipas (Gambar 2.4) akan mengakibatkan angkur dan kabel di puncak menara berada pada satu elevasi sehingga akan bertumpuk dan memerlukan pelebaran kepala menara. Pada bentuk radial seperti bentuk tunggal dan kipas (Gambar 2.4), Pemeliharaan angkur kabel akan lebih sulit dilakukan karena kabel bertemu pada satu titik di puncak menara.

Bentuk sejajar akan memerlukan menara yang sangat tinggi dan struktur yang lebih berat. Bentuk bintang umumnya

digunakan untuk bentang jembatan beruji kabel yang tidak panjang. Letak kabel yang membentuk sudut terhadap garis horizontal dengan memanjang dan melintang jembatan akan memberikan komponen gaya kabel pada tiga arah, yaitu arah vertikal, memanjang dan melintang terhadap jembatan.

- **Jenis Kabel**

Jenis-jenis kabel yang digunakan sebagai penyangga utama jembatan cable-stayed ada bermacam-macam. Dalam Pasal 4.8.1 Peraturan PU Nomor 08/SE/M/2015, jenis-jenis kabel diklasifikasikan pada tabel 2.1 di bawah.

Tabel 2. 1 Jenis-Jenis Kabel (08/SE/M/2015)

Jenis Kabel	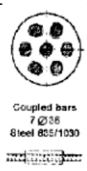		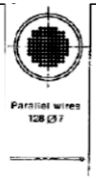		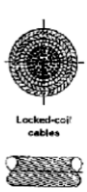
Tendons	*Bars* ϕ26.5, 32, 36 mm	*Bars* ϕ 16 mm	*Wire* ϕ 6, 7 mm	*Strand* ϕ 0.5, 0.6, 0.7 of 7 *twisted wires*	*Wire with different profiles* ϕ2 9-7 mm
0.2% proof stress, σ_{02} (N/mm²)	835 1080	1350	1470	1570 ~ 1670	-
Ultimate tensile strength, β_z (N/mm²)	1030 1230	1500	1670	1770 ~ 1870	1000 ~ 1300
Fatigue					
$\Delta\sigma$ (N/mm²)	80	-	350	300 ~ 320	120 ~ 150
$\sigma max/\beta_z$	0.6	-	0.45	0.5 ~ 0.45	0.45
Modulus of elasticity, E (N/mm²)	210 000	210 000	205 000	190 000 ~ 200 000	180 000 ~ 165 000
Failure Load kN	7339	7624	7467	7634	7310

Kabel yang sering digunakan dalam desain jembatan cable-stayed adalah sebagai berikut:

i. Paralel Wire Cable

Parallel wire cable terdiri dari kawat bulat digalvanis berdiameter 5 mm sampai 7 mm berbentuk hexagonal, dengan suatu helix panjang. Kawat tersebut biasanya dibungkus oleh High Density Polythelene (HDPE) tube. Dapat dilihat pada Gambar 2.5.

ii. Paralel Strand Cable

Parallel stand cable terdiri dari beberapa strand. Strand-strand tersebut selanjutnya dipasang secara paralel. Setiap kabel terdiri dari beberapa strand antara lain sebesar 7, 19, 37, 61, 91, atau 127 buah. Dapat dilihat pada Gambar 2.5.

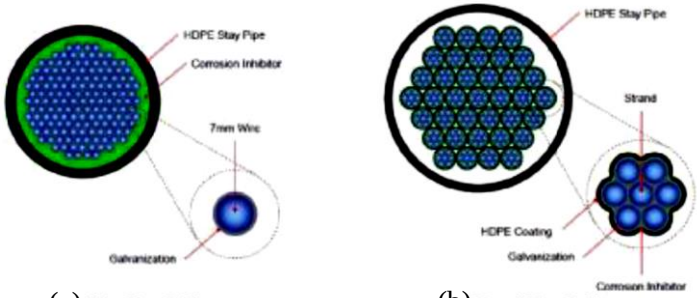

(a) **Wire Stay Cable** (b) **Strand Stay Cable**

Gambar 2. 5 (a)*Wire Stay Cable*, (b)*Strand Stay Sable*

- **Angkur Kabel**

a. Sistem Pengangkuran

Secara struktural angkur pada jembatan cable-stayed berfungsi sebagai dudukan vertikal bagi gelagar, sehingga hampir semua beban vertikal bekerja pada angkur. Hal ini berbeda dengan sistem pratekan yang umumnya terletak di luar daerah kritis dan dengan variasi tegangan yang sangat kecil. Karena dari itu

tegangan yang diijinkan untuk angkur jembatan cable-stayed relatif kecil.

Secara umum terdapat dua sistem pengangkuran pada jembata cable-stayed, yaitu:

i. Angkur Hidup

Pengangkuran dilakukan pada ujung kabel, dimana pada bagian ini dilakukan pemberian tegangan. Angkur hidup biasanya diletakkan di menara jembatan.(Lihat Gambar 2.6)

ii. Angkur Mati

Pengangkuran dilakukan pada ujung kabel, tetapi pada bagian ini tidak dilakukan pemberian tegangan. Angkur mati biasanya diletakkan di dek jembatan. (Lihat Gambar 2.6)

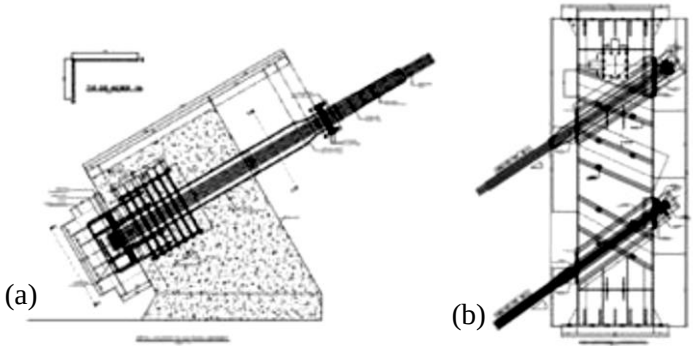

Gambar 2. 6 (a)Angkur Mati, (b)Angkur Hidup

b. Posisi dan Detail Pengangkuran

i. Pengangkuran pada Menara

Bagian dari kabel yang masuk ke dalam Menara ditempatkan di dalam suatu pipa pengarah/guide pipe darikonstruksi baja menembus dari sisi main span ke sisi side span dan sebaliknya. Ada beberapa alternative pengangkuran pada menara sebagaimana disajikan pada

Gambar 2.7 sebagai berikut:

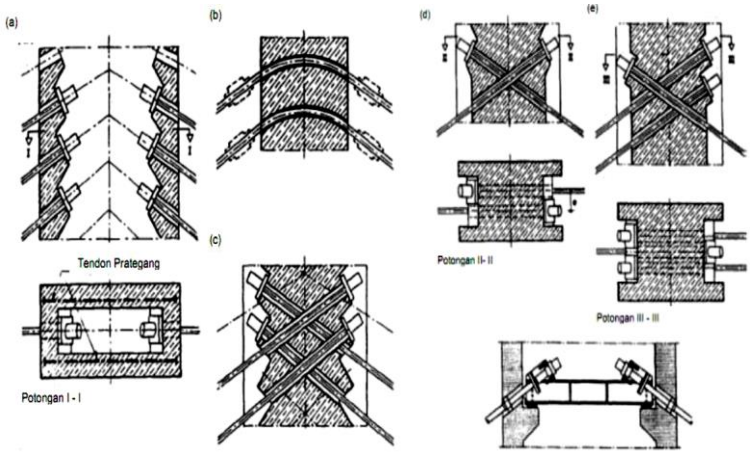

Gambar 2. 7 Alternatif Pengangkuran Pada Menara

ii. Pengangkuran pada Dek Jembatan

Aliran dari gaya-gaya sangat penting untuk iperhatikan ketika mendesain jembatan cable-stayed. Pada kasus tertentu, kabel dapat langsung diangkurkan ke elemen utama dek jembatan, sedangkan pada kasus lain angkur harus diletakkan di luar elemen utama sehingga diperlukan bracker khusus untuk menyalurkan gaya ke elemen utama dek jembatan.

Berikut lokasi pengangkuran pada dek jembatan (Lihat Gambar 2.8):

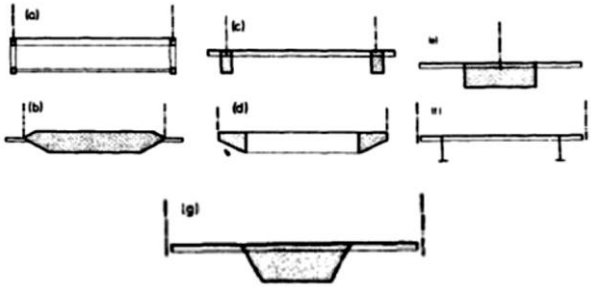

Gambar 2. 8 Lokasi Angkur Pada Dek Jembatan

2.2.3. Gelagar Utama (*Girder*)

Gelagar utama pada jembatan yang paling sering digunakan adalah stiffening truss (digunakan untuk struktur baja) dan solid web (digunakan untuk struktur baja, beton, beton bertulang, maupun beton prategang) (Podolny and Scalzi, 1976). Bahannya dapat terbuat dari material yang berbeda seperti baja, beton atau komposit baja-beton. Gelagar utama yang tersusun dari solid web cenderung berupa plate girder (gelagar pelat) atau box girder (gelagar kotak). Pilihan dari material untuk gelagar utama tergantung dari parameter biaya. Berat dari gelagar utama mempunyai pengaruh yang signifikan pada kebutuhan kabel, tiang, dan pondasi. Berikut ini penjalasan gelagar utama yang sering digunakan :

1) Gelagar baja (steel girders)

Beberapa jembatan dibangun dengan jaringan yang kaku pada girder utama yang dibagi menjadi dua jenis :
konstruksi dengan girder I dan satu atau lebih girder kotak seperti pada Gambar 2.9.

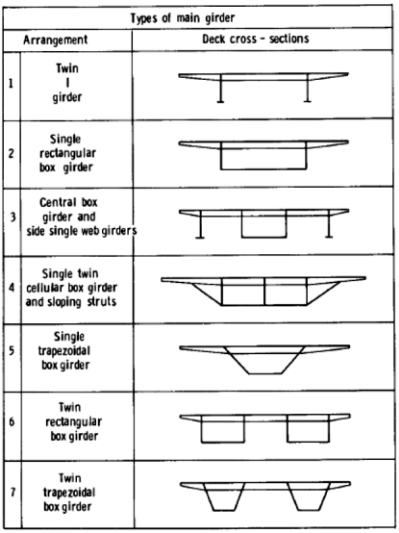

Gambar 2. 9 Gelagar Solid Web Baja

2) Gelagar rangka (trusses girder)

Dari beberapa dekade terakhir, kerangka (trusses) jarang digunakan pada pembangunan jembatan dibandingnkan dengan steel girders dikarenakan memerlukan banyak fabrikasi dan pemerliharaan dan perlindungan terhadap korosi sulit. Contoh gelagar utama yang menggunakan trusses pada Gambar 2.10.

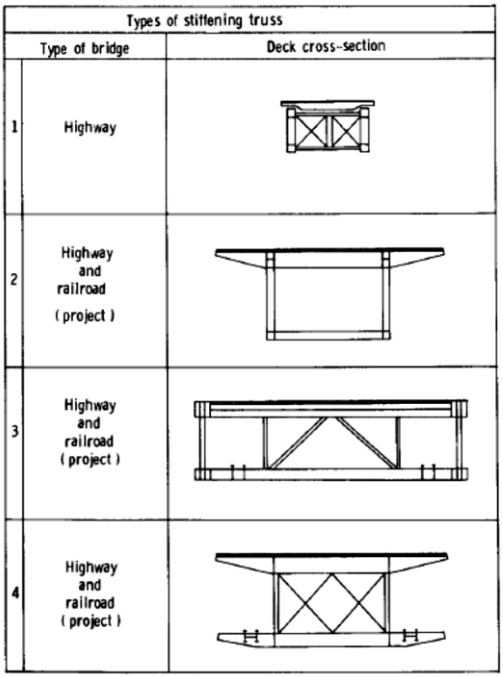

Gambar 2. 10 Macam-Macam Trusses

3) Gelagar beton pratekan (prestressed concrete)

Selama beberapa tahun banyak jembatan cable stayed yang telah dibangun dengan gelagar beton bertulang maupun pratekan dan girder utama. Jembatan yang menggunakan bahan beton ini memilik keunggulan dari ekonomi, kekakuan yang tinggi dan

defleksi yang kecil (Troitsky, 1988), penampang yang sering digunakan seperti Gambar 2.11.

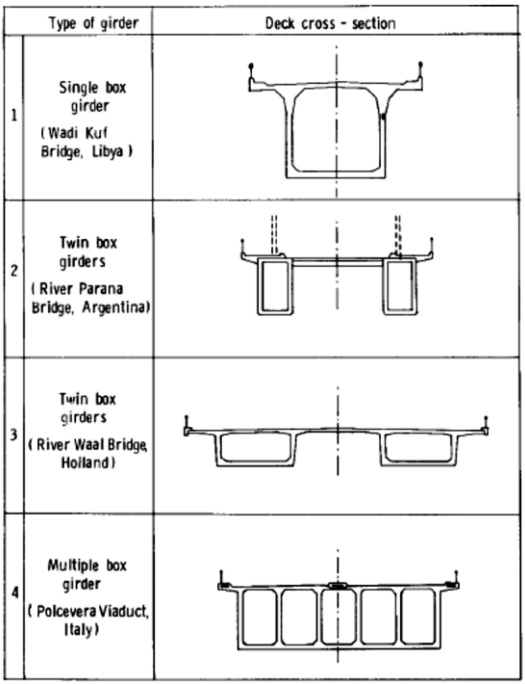

Gambar 2. 11 Macam-Macam Concrete Girder

2.2.4. Menara/ Pylon

Perencanaan menara merupakan hal yang sangat penting dan mendasar yang akan mempengaruhi estetika, keekonomisan serta perilaku struktur dari jembatan. Bentuk dasar menara jembatan cable-stayed ada beberapa macam, seperti ditampilkan pada gambar 2.12 di bawah. Pemilihan bentuk menara ditentukan oleh konfigurasi kabel, bentang jembatan dan aspek estetika.

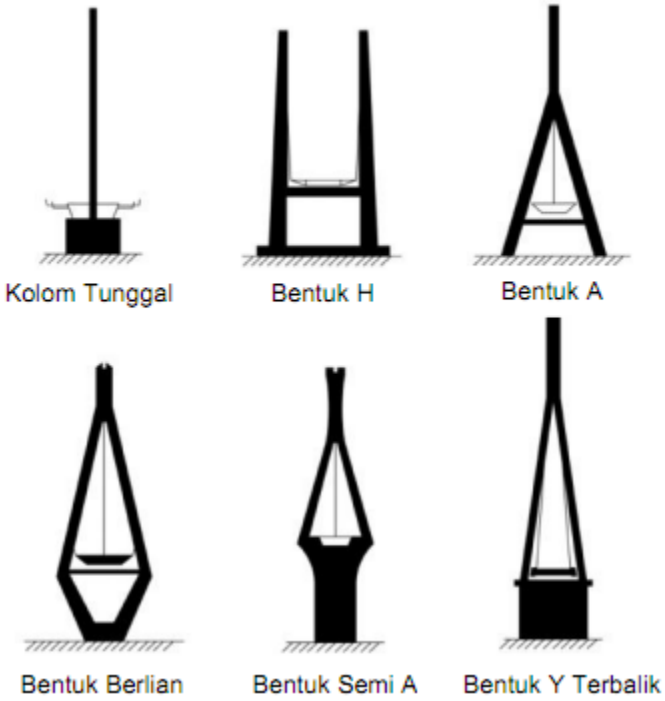

Gambar 2. 12 Bentuk Dasar Menara/*Pylon* Jembatan Cable-Stayed

2.3. Pembebanan Jembatan

Pembebanan Jembatan Peraturan pembebanan yang digunakan dalam desain jembatan cable-stayed ini adalah peraturan SNI 1725-2016. Beban-beban yang akan direncanakan meliputi:

2.3.1. Beban Permanen

- Berat Isi untuk Beban Mati

SNI 1725-2016 mensyaratkan massa setiap bagian bangunan harus dihitung berdasarkan dimensi yang tertera dalam gambar dan berat jenis bahan yang digunakan. Berat dari bagian-bagian tersebut adalah massa dikalikan percepatan gravitasi (g). Di

mana percepatan gravitasi yang digunakan adalah sebesar 9,81 m/detik2. Besarnya massa dan berat isi diberikan pada tabel 2.2 berikut.

Tabel 2. 2 Berat Isi Material Untuk Jembatan (SNI 1725-2016)

No	Bahan	Berat Isi (kN/m3)	Kerapatan Massa (Kg/m3)
1	Lapisan permukaan beraspal (bituminous wearing surfaces)	22	2245
2	Besi tulangan (cast iron)	71	7240
3	Timbunan tanah dipadatkan (compacted sand, silt or clay)	17,2	1755
4	kerikil dipadatkan (rolled gravel, macadam or ballast)	18,8-22,7	1920-2315
5	Beton aspal (asphalt concrete)	22	2245
6	Beton ringan (low density)	12,5-19,6	1250-2000
7	Beton fc' < 35 MPa	22-25	2320
	Beton 35 MPa < fc' <105 MPa	22+0,022	220+2,29
8	Baja (steel)	78,5	7850
9	Kayu (ringan)	7,8	800
10	Kayu (keras)	11	1125

- Berat isi Sendiri

Berat sendiri dalam struktur jembatan merupakan berat bagian dari elemen-elemen struktural dan juga elemen-elemen lain

yang dipikul oleh jembatan. Faktor beban untuk berat sendiri diberikan pada tabel 2.3 berikut.

Tabel 2. 3 Faktor beban untuk beban permanen(SNI 1725-2016)

Tipe Beban	Faktor Beban (YMS)			
	Keadaan Batas Layan		Keadaan Batas Ultimit	
	Bahan		Biasa	Terkurangi
Tetap	Baja	1,00	1,10	0,9
	Alumunium	1,00	1,10	0,9
	Beton Pracetak	1,00	1,20	0,85
	Beton dicor di tempat	1,00	1,30	0,75
	Kayu	1,00	1,40	0,7

- Beban Mati Tambahan

Beban mati tambahan adalah berat selurh bahan yang membentuk suatu beban pada jembatan yang merupakan elemen nonstruktural, dan besarnya dapat berubah selama umur rencana jembatan. Faktor beban mati tambahan diberikan pada tabel 2.4 berikut.

Tabel 2. 4 Faktor Beban Untuk Beban Mati Tambahan(SNI 1725-2016)

Tipe Beban	Faktor Beban (ΥMA)			
	Keadaan Batas Layan ($\Upsilon^s MA$)		Keadaan Batas Ultimit ($\Upsilon^u MA$)	
	Keadaan		Biasa	Terkurangi
Tetap	Umum	1,00[(1)]	2,00	0,7
	Khusus (Terawasi)	1,00	1,40	0,8
Catatan [(1)]: Faktor beban layan sebesar 1,3 digunakan untuk beban utilitas				

2.3.2. Beban Lalu Lintas

Beban lalu lintas untuk perencanaan jembatan terdiri atas beban lajur “D” dan beban truk “T”. Beban

lajur “D” bekerja pada seluruh lebar jalur kendaraan dan menimbulkan pengaruh pada jembatan yang ekuivalen dengan suatu iring-iringan kendaraan yang sebenarnya.beban truk “T” adalah satu kendaraan berat dengan 3 gandar yang ditempatkan pada beberap posisi dalam lajur lalu lintas rencana. Tiap gandar terdiri atas dua bidang kontak pembebanan yang dimaksud sebagai simulasi pengaruh roda kendaraan berat. Hanya satu truk “T” ditetapkan per lajur lalu lintas rencana.

i. Lajur Lalu Lintas Rencana

Jumlah maksimum laur lalu lintas yang digunakan untuk berbagai lebar jembatan bisa dilihat dalam tabel 2.5 berikut.

Tabel 2. 5 Ketentuan Jumlah Lajur Jembatan(SNI 1725-2016)

Tipe Jembatan (1)	Lebar Bersih Jembatan (2) mm	Jumah Lajur Lalu Lintas Rencana
Satu Lajur	$3{,}000 \leq w \leq 5{,}250$	1
Dua Arah, tanpa Median	$5{,}250{,}000 \leq w \leq 10{,}000$	2
	$7{,}500 \leq w \leq 10{,}000$	3
	$10{,}000 \leq w \leq 12{,}500$	4
	$12{,}500 \leq w \leq 15{,}250$	5
	$w \geq 15{,}200$	6
Dua Arah, Dengan Median	$5{,}500 \leq w \leq 8{,}000$	2
	$8{,}250 \leq w \leq 10{,}750$	3
	$11{,}000 \leq w \leq 13{,}500$	4
	$13{,}750 \leq w \leq 16{,}250$	5
	$w \geq 16{,}500$	6

Catatan (1) : untuk jembatan tipe lain, jumlah lajur lalu lintas rencana harus ditentukan oleh instansi yang berwenang.
Catatan (2) : lebar lajur kendaraan adalah jarak minimum antara kerb atau rintangan untuk satu arah atau jarak antara kerb/rintangan/median dan median untuk banyak arah

ii. Beban Lajur

Beban lajur "D" terdiri atas beban terbagi rata (BTR) yang digabungkan dengan beban garis (BGT) seperti terlihat pada Gambar 2.13. Adapun faktor yang digunakan untuk beban lajur "D" seperti pada tabel 2.6 berikut.

Tabel 2. 6 Faktor Beban Untuk Beban Lajur "D" (SNI 1725-2016)

Tipe Jembatan Beban	Jembatan	Faktor Beban (ΥMA)	
		Keadaan Batas Layan ($\Upsilon^s MA$)	Keadaan Batas Ultimit ($\Upsilon^u MA$)
Transien	Beton	1,00	1,80
	Box Girder Baja	1,00	2,00

Beban terbagi rata (BTR) mempunyai intensitas q kPa dengan besaran q tergantung pada panjang total yang dibebani L yaitu sebagai berikut:

Jika L ≤ 30 m : q = 9,0 kPa (2.1)

Jika L > 30 m : q = 9,0 (0,5 +15/L) kPa (2.2)

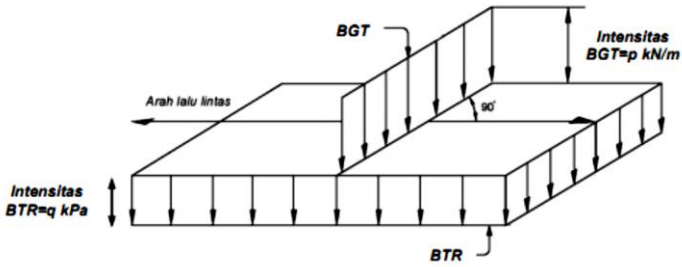

Gambar 2. 13 Beban Lajur "D"

Sedangkan untuk beban garis (BGT) besarnya adalah 49,0 kN/m dan ditempatkan tegak lurus terhadap arah lalu lintas pada jembatan, seperti terlihat pada gambar 2.13 di atas.

iii. Beban Truk

Selain beban "D", beban lalu lintas lainnya adalah beban truk "T". Beban truk "T" tidak dapat digunakan bersamaan dengan beban "D". Beban truk dapat digunakan untuk perhitungan struktur lantai. Adapun faktor beban untuk beban "T" diberikan pada tabel 2.7 berikut:

Tabel 2. 7 Faktor Beban Untuk Beban Truk "T" (SNI 1725-2016)

Tipe Jembatan Beban	Jembatan	Faktor Beban (ΥMA)	
		Keadaan Batas Layan ($\Upsilon^{s}MA$)	Keadaan Batas Ultimit ($\Upsilon^{u}MA$)
Transien	Beton	1,00	1,80
	Box Girder Baja	1,00	2,00

Untuk besarnya pembebanan truk "T", diklasifikasikan pada gambar 2.14 berikut:

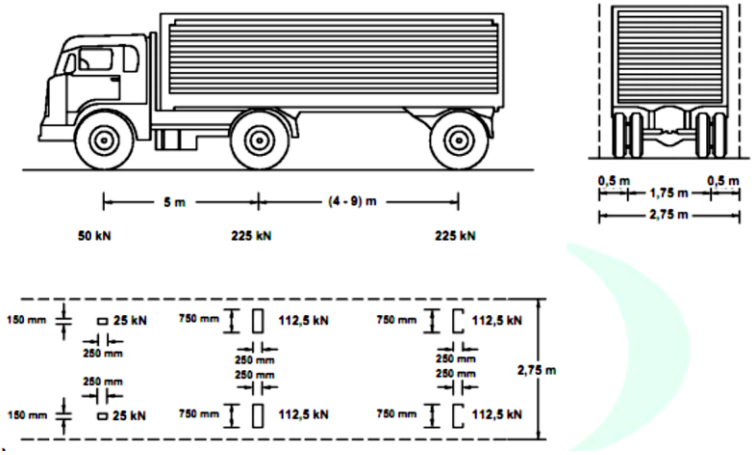

Gambar 2. 14 Konfigurasi Beban Truk “T”

iv. Faktor Beban Dinamis

Faktor beban dinamis (FBD) diterapkan untuk beban truk rencana, sedangkan untuk gaya sentrifugal, gaya rem, tidak perlu diperbesar dengan faktor beban dinamis. Faktor beban dinamis juga tidak pelu diterapkan pada beban pejalan kaki atau beban terbagi rata (BTR).

Untuk pembebanan truk “T”, FBD diambil 30%(Lihat Gambar 2.15). Nilai FBD yang dihitung digunakan pada seluruh bagian bangunan yang berada di atas permukaan tanah. Untuk bagian bangunan bawah dan fondasi yang berada di bawah garis permukaan, nilai FBD harus diambil sebagai peralihan linier dari nilai ada garis permukaan tanah sampai nol pada kedalaman 2 m.

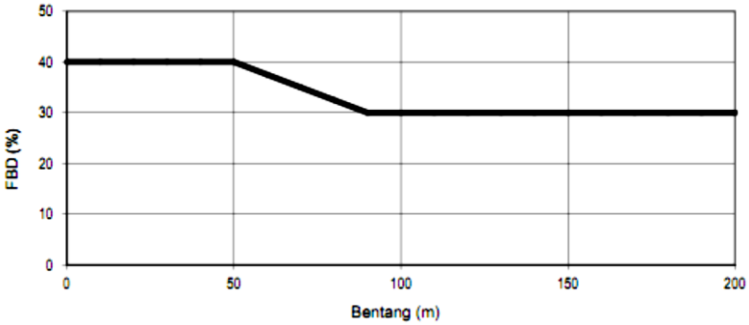

Gambar 2. 15 Faktor Beban Dinamis Untuk “T” Untuk Pembebanan Lajur “D”

v. Gaya Rem (TB)

Gaya rem harus diambil terbesar dari:

- 25% dari berat ganda truk desain, atau
- 5% dari berat truk rencana ditambah beban lejur terbagi rata (BTR)

Gaya rem tersebut ditempatkan di semua alajur rencana yang dimuati sesuai dengan Pasal 8.2 SNI 1725 2016 dan yang berisi lalu lintas dengan arah yang sama. gaya ini diasumsikan untuk bekerja secara horizontal pada jarak 1800 mm di atas permukaan jalan pada masing-masing arah longitudinal dan dipilih yang paling menentukan.

vi. Pembebanan untuk Pejalan Kaki

Semua kompoen trotoar yang lebih lebar dari 600 mm direncanakan untuk memikul beban pejalan kaki dengan intensitas 5 kPa dan dianggap bekerja secara bersamaan dengan beban kendaraan pada masing-masing lajur kendaraan.

vii. Beban Akibat Tumbukan Kendaraan

Untuk jembatan yang apabila tidak diberikan pelindung, maka semua kepala jembatan dan pilar dalam jarak 9000 mm dari

tepi jalan, atau dalam jarak 15000 mm dari sumbu rel harus direncanakan untuk mampu memikul beban statik ekuivalen sebesar 1800 kN. Beban tersebut diasumsikan bekerja pada ketinggian 1200 mm di atas permukaan tanah.

2.3.3. Aksi Lingkungan

Selain beban permanen dan beban lalu lintas, beban akibat aksi lingkungan juga berpengaruh pada struktur jembatan. Aksi lingkungan terbsebut diantaranya adalah pengaruh angin, gempa dan penyebab-penyebab alamiah lainnya. Penentuan beban-beban akibat aksi lingkungan ini didasarkan pada Pasal 9 SNI 1725 2016 sebagai berikut:

i. Beban Angin

1. Tekanan angin horizontal.

Tekanan angin yang ditentukan untuk angin horizontal diasumsikan disebabkan oleh angin rencana dengan kecepatan dasar (VB) sebesar 90 hingga 126 km/jam.

Untuk jembatan atau bagian jembatan dengan elevasi lebih tinggi dari 10000 mm di atas permukaan tanah atau permukaan air, kecepatan angin rencana VDZ harus dihitung dengan persamaan berikut:

$$V_{DZ} = 2{,}5\ V_0 \left(\frac{V_{10}}{V_B}\right) ln\left(\frac{Z}{Z_0}\right) \qquad (2.3)$$

Dengan,

V_{DZ} : kecepatan angin rencana pada elevasi rencana, Z (km/jam)

V_{10} : kecepatan angin pada elevasi 10000 mm di atas permukaan tanah atau di ataspermukaan air rencana (km/jam)

V_B : kecepatan angin rencana yaitu 90 hingga 126 km/jam

Z : elevasi struktur diukur dari permukaan tanah atau dari permukaan air di mana beban angin rencana dihitung (Z > 10000 mm)

V_0 : kecepatan gesekan angin, yang meruakan karakteristik meteorologi, sebagaimana ditentukan dalam tabel 2.8, untuk berbagai macam tipe permukaan di hulu jembatan (km/jam)

Z_0 : panjang gesekan di hulu jembatan, yang merupakan karakteristik meterologi (mm) (tabel 2.8)

V_{10} diperoleh dari:

- Grafik kecepatan angin dasar untuk berbagai periode ulang.
- Survei angin pada lokasi jembatan.
- Jika tidak ada data yang lebih baik, perencana dapat mengasumsikan bahwa V10 = VB = 90 s/d 126 km/jam.

Tabel 2. 8 Nilai V_0 Dan Z_0 Untuk Berbagai Variasi Kondisi Pemukaan Hulu(SNI 1725-2016)

Kondisi	Lahan Terbuka	Sub Urban	Kota
V_0 (km/jam)	13,2	17,6	19,3
Z_0 (mm)	70	1000	2500

Tekanan angin rencanan (MPa) pada struktur jembatan dihitung berdasarkan persamaan berikut:

$$P_D = P_B \left(\frac{V_{DZ}}{V_B}\right)^2 \qquad (2.4)$$

Di mana,

P_B : tekanan angin dasar seperti ditentukan dalam tabel berikut.

Tabel 2. 9 Tekanan Angin Dasar(SNI 1725-2016)

Komponen Bangunan Atas	Angin Tekan (Mpa)	Angin Hisap (Mpa)
Rangka, Kolom, dan Pelengkung	0,0024	0,0012
Balok	0,0024	N/A

Permukaan Datar	0,0019	N/A

Gaya total beban angin tidak boleh diambil kurang dari 4,4 kN/mm pada bidang tekan dan 2,2 kN/mm pada bidang hisap pada struktur rangka dan pelengkung, serta tidak kurang dari 4,4 kN/mm. Selain pada struktur jembatan beban angin juga diperhitungkan pada kendaraan yang melintasi jembatan sehingga menimbulkan beban pada jembatan. Tekanan angin tersebut diasumsikan sebagai tekanan menerus sebesar 1,4 N/mm, yang bekerja tegak lurus di atas permukaan jalan setinggi 1800 mm.

2. Tekanan angin vertikal.

Pasal 9.6.2 SNI 1725 2016 menyatakan bahwa jembatan harus mampu memikul beban garis memanjnag jembatan yeng merepresentasikan gaya angin vertikal ke atas sebesar 9,6 x 10-4 MPa dikalikan lebar jembatan, termasuk parapet dan trotoar. Gaya ini harus ditinjau hanya untuk Keadaan Batas III dan Layan IV yang tidak melibatkan angin pada kendaraan, dan hanya ditinjau untuk kasus pembebanan di mana arah angin dianggap bekerja tegak lurus terhadap sumbu memanjang jembatan. Gaya memanjang tersebut mempunyai titik tangkap pada seperempat lebar jembatan dan bekerja secara bersamaan dengan beban angin horizontal yang ditentukan dalam poin sebelumnya.

ii. Pengaruh Gempa

Analisa beban gempa untuk jembatan mengacu pada RSNI 2833 2013 tentang “Perancangan Jembatan Terhadap Gempa”. Pemilihan metode analisis gempa dijelaskan dalam Pasal 6.3.1 RSNI 2833 2013 sebagai berikut.

Untuk melakukan analisis gempa dibutuhkan respons spektrum. Respons spektrum di permukaan tanah ditentukan dari 3 nilai percepatan puncak ang mengacu pada peta gempa Indonesia (PGA, Ss dan S1) serta nilai faktor amplifikasi FPGA, Fa, Fv. Perumusan respons spektrum adalah sebagai berikut:

$$As = F_{PGA}\ x\ PGA \quad (2.5)$$
$$S_{DS} = F_a\ x\ S_s \quad (2.6)$$
$$S_{D1} = F_v\ x\ S_1 \quad (2.7)$$

Koefisien respon gempa elastic :

1. Untuk T < T0 :

$$C_{sm} = (S_{DS} - A_s)\frac{T}{T_0} + A_s \quad (2.8)$$

2. Untuk T0 < T<Ts

$$C_{sm} = S_{DS} \quad (2.9)$$

3. Untuk Ts < T

$$C_{sm} = \frac{S_{D1}}{T} \quad (2.10)$$

Keterangan:

S_{DS} : nilai spektra permukaan tanah pada periode pendek (T=0,2 detik)

S_{D1} : nilai spektra permukaan tanah pada periode 1,0 detik

$T_0 = 0{,}2\ T_s$

$$T_s = \frac{S_{D1}}{S_{DS}} \quad (2.11)$$

Gaya gempa elastis yang bekerja pada struktur jembatan harus dikombinasikan sehingga memiliki 2 tinjauan pembebanan sebagai berikut:

- 100% gaya gempa pada arah x dikombinasikan 30% gaya gempa pada arah y.
- 100% gaya gempa pada arah y dikombinasikan 30% gaya gempa pada arah x.

Atau dirumuskan sebagai berikut:

1. DL + γEQLL ± EQx ± 0,3 EQy
2. DL + γEQLL ± EQy ± 0,3 EQx

Di mana

DL : beban mati

γEQ : faktor beban hidup kondisi gempa

γEQ	= 0,5 (jembatan sangat penting)
γEQ	= 0,3 (jembatan penting)
γEQ	= 0 (jembatan lainnya)
LL	: beban hidup
EQx	: beban gempa arah x
EQy	: beban gempa arah y

2.3.4. Kombinasi Pembebanan

Kombinasi pembebanan untuk jembatan mengacu pada SNI 1725-2016 yang diberikan sebagai berikut :

Tabel 2. 10 Kombinasi Pembebanan (SNI 1725-2016)

Keadaan Batas	*MS MA TA PR PL SH*	*TT TD TB TR TP*	*EU*	*EW_s*	*EW_L*	*BF*	*EU_n*	*TG*	*ES*	*Gunakan salah satu*		
										EQ	*TC*	*TV*
Kuat I	γ_p	1,8	1,00	-	-	1,00	0,50/1,20	γ_{TG}	γ_{ES}	-	-	-
Kuat II	γ_p	1,4	1,00	-	-	1,00	0,50/1,20	γ_{TG}	γ_{ES}	-	-	-
Kuat III	γ_p	-	1,00	1,40	-	1,00	0,50/1,20	γ_{TG}	γ_{ES}	-	-	-
Kuat IV	γ_p	-	1,00	-	-	1,00	0,50/1,20	-	-	-	-	-
Kuat V	γ_p	-	1,00	0,40	1,00	1,00	0,50/1,20	γ_{TG}	γ_{ES}	-	-	-
Ekstrem I	γ_p	γ_{EQ}	1,00	-	-	1,00	-	-	-	1,00	-	-
Ekstrem II	γ_p	0,50	1,00	-	-	1,00	-	-	-	-	1,00	1,00
Daya layan I	1,00	1,00	1,00	0,30	1,00	1,00	1,00/1,20	γ_{TG}	γ_{ES}	-	-	-
Daya layan II	1,00	1,30	1,00	-	-	1,00	1,00/1,20	-	-	-	-	-
Daya layan III	1,00	0,80	1,00	-	-	1,00	1,00/1,20	γ_{TG}	γ_{ES}	-	-	-
Daya layan IV	1,00	-	1,00	0,70	-	1,00	1,00/1,20	-	1,00	-	-	-
Fatik (TD dan TR)	-	0,75	-	-	-	-	-	-	-	-	-	-

2.4. Preliminary Design

2.4.1. Preliminary Design Lantai Kendaraan

Dalam Pasal 4.6.2 Peraturan PU Nomor 08/SE/M/2015 dijelaskan tentang penentuan tinggi gelagar jembatan. Sebagai estimasi awal tinggi gelagar dapat ditetuntukan sebesar 1/50 – 1/70 dari panjang bentang utama.

Sedangkan pada Pasal 4.6.3 Peraturan PU Nomor 08/SE/M/2015 dijelaskan taksiran awal berat dek jembatan *cable stayed* sebagai berikut:

- Gelagar baja : 2,5 s/d 3,5 kN/m2 (box, rangka)
- Gelagar komposit baja-beton : 6,5 s/d 8,5 kN/m2
- Gelagar beton : 10,0 s/d 15 kN/m2 (box beton)

Untuk menghitung berat sendiri disyaratkan penambahan sebesar 30% sebagai asumsi untuk ikatan pengaku, pelat simpul, sambungan koppel, dan baut.

2.4.2. Preliminary Design Kabel

a. Jarak Antar Kabel

Dalam Pasal 4.4.3 Peraturan PU Nomor 08/SE/M/2015 dijelaskan tentang acuan jarak kabel yang umum digunakan. Diantaranya adalah sebagai berikut:

- Dek jembatan yang terbuat dari baja atau material komposit, jarak antar kabel adalah 15 meter sampai dengan 25 meter.
- Pada dek jembatan beton, jarak antar kabel adalah 5 m sampai dengan 10 m.

Untuk panel tengah, ketika jembatan tidak mengalami gaya tekan akibat inklinasi kabel, dimungkinkan untuk menggunakan panjang segmen yang lebih besar. umunya jarak kabel pada segmen tengah diambil 20% - 30% lebih besar dibandingkan segmen yang lain.

b. Dimensi Kabel

Dalam desain jembatan cable-stayed Umbul Kaji ini digunakan tipe konfigurasi kabel arah memanjang dengan tipe fan pattern. Penentuan dimensi awal mengacu pada Pasal 11.1 Peraturan PU Nomor 08/SE/M/2015 sebagai berikut:

Dengan mengabaikan pengaruh kelengkungan kabel, gaya tarik pada kabel ke i Tsc,I ditentukan sebagai berikut :

$$T_{sc,i} \approx \left(g + p + \frac{P}{30d} \right) \frac{\lambda_i + \lambda_{i+1}}{2 * \sin \phi_i} + \gamma_{cb} A_{sc,i} \frac{a_i}{\sin \phi_i \cos \phi_i} \quad (2.12)$$

Luas penampang ruji kabel ditentuk berdasarkan persamaan berikut

$$T_{sc,i} = A_{sc,i} f_{cdb} \quad (2.13)$$

Sehingga Luas penampang kabel ditentukan berdasarkan persamaan berikut:

$$A_{sc,i} \cong \frac{\left(g + p + \frac{P}{30d} \right)(\lambda_i + \lambda_{i+1}) \cos\phi_i}{2(f_{cbd} \sin\phi_i \cos\phi_i - \gamma_{cb} a_1)} \quad (2.14)$$

Dengan,

Tsc,i : gaya tarik pada kabel ke i
g : beban merata mati
p : beban merata hidup
d : tinggi gelagar jembatan
P : beban terpusat
λi : jarak antar kabel
ϕi : sudut kabel ke i terhadap bidang horizontal
γcb : berat jenis kabel
Asc,i : luas penampang kabel ke i
fcbd : tegangan ijin kabel

h : tinggi menara dari elevasi gelagar
Asc : luas penampang kabel angkur

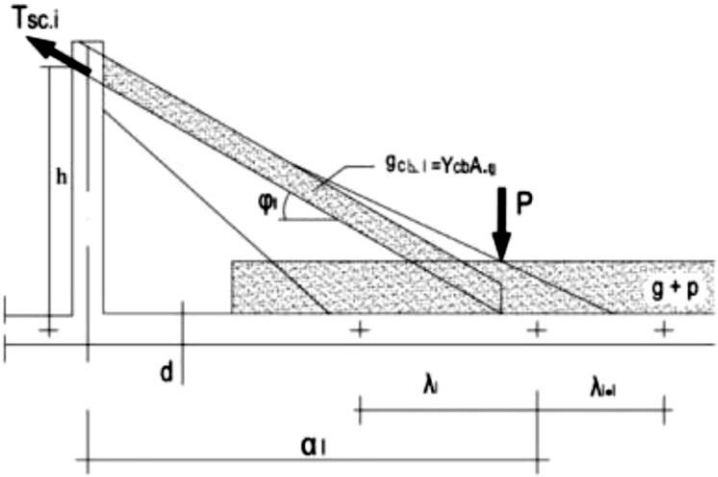

Gambar 2. 16 Notasi Gaya Pada Kabel Angkur

c. Modulus Elastisitas Kabel

Troitsky (1977) telah menjelaskan tentang modulus elastisitas kabel untuk jembatan cable-stayed. Troitsky (1977) mendefinisikan modulus elastisitas ekivalen kabel Ei sebagai kombinasi antara modulus elastisitas kabel akibat kelengkungan kabel Ef dan modulus elastisitas akibat elastisitas kabel Ee. Berdasarkan penurunan rumus yang telah dilakukan oleh Troitsky (1977), maka didapatkan persamaan modulus elastisitas ekivalen ideal sebagai berikut:

$$E_i = \frac{E_e}{1+\left[\frac{(\gamma L)^2}{12\sigma^3}\right]E_e} \qquad (2.15)$$

Dengan,

Ei : Modulus Young kabel ideal akibat lengkungan
Ee : Modulus Young kabel pada kondisi lurus

γ : berat jenis kabel
L : panjang horizontal kabel
σ : tegangan tarik kabel

d. Tegangan Ijin Kabel

Troitsky (1977) menyatakan bahwa safety factor untuk kabel pada umumnya diambil K = 2,5. Menurutnya koefisien ini sudah merepresentasikan penyimpanan kekuatan kabel akibat pembebanan.

Dengan mengasumsikan bahwa beban mati dari superstructure berkisar antara 60 – 70% dari total beban, sedangkan beban hidup berkisar antara 30 – 40%, kemudian koefisien resultan dari kekuatan yang tersimpan di dalam kabel adalah:

$$K_{res} = \frac{K}{0.65n_1 + 0.36n_2(1+\mu)} \quad (2.16)$$

Di mana,

n1 = 1.1 : koefisien overloading untuk beban mati
n2 = 1.4 : koefisien overloading untuk beban hidup
1+μ = 1.1 : koefisien dinamis

Subtitusikan nilai-nilai di atas pada persamaan 2.19 :

$$K_{res} = \frac{K}{0.65x1.1 + 1.35x1.4 + 1.1} \approx 2 \quad (2.17)$$

Kekuatan kabel terhitung sebagai berikut:

$$R = R_{all}K_{m1m2} \quad (2.18)$$

Di mana m1 = 0.8 merupakan koefisien kinerja material dalam struktur dan,

$$m_2 = \frac{1}{Km1Kres} = \frac{1}{0.8x0.8x2} = 0.78 \quad (2.19)$$

Troitsky (1977) menyarankan untuk mereduksi kekuatan kabel sebesar 5%, sehingga:

$$m_2 = 0.95 \times 0.78 = 0.74 \quad (2.20)$$

2.4.3. Preliminary Design Pylon

a. Tinggi Pylon

Dalam Pasal 4.7.1 Peraturan PU Nomor 08/SE/M/2015 dijelaskan ketentuan untuk perkiraan awal tinggi pylon yaitu sebesar 0,19 – 0,25 dari bentang jembatan terpanjang.

b. Dimensi Awal Pylon

Ketentuan dalam penentuan dimensi awal pylon dijelaskan dalam Pasal 11.2.1 Perauran PU Nomor 08/SE/M/2015. Dalam menentukan dimensi awal pylon dengan konfigurasi kabel arah memanjang pola fan, perlu dihitung perkiraan gaya maksimum yang bekerja pada pylon sebagai berikut:

$$N_{pt} = \frac{1}{2}(g_a + p_a)a_a + \frac{1}{2}(g_m + p_m)\left(2 + \frac{a_m}{a_a}\right)a_m + \frac{2}{3}Q_{Fa} + Q_{Fm}\left(1 + \frac{a_m}{3a_a}\right) + \frac{1}{2}Q_a \qquad (2.21)$$

Dengan,

QFa : kuantitas dari kabel di bentang tepi
QFm : kuantitas dari kabel di bentang tengah
Qa : kuantitas kabel angkur

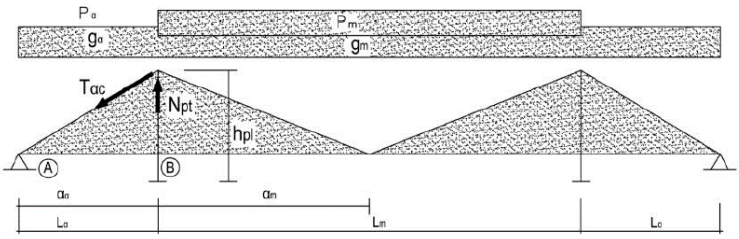

Gambar 2. 17 Gaya Di Puncak Menara Jembatan Cable-Stayed

2.5. Perhitungan Struktur

2.5.1. Perhitungan Struktur Baja

Perhitungan komponen struktur baja pada desain jembatan cable-stayed ini mengacu pada AISC 360-10.

a. Sifat Mekanis Baja

Tabel 2. 11 Sifat Mekanis Baja Struktural(RSNI T-03-2005)

Jenis Baja	Tegangan Putus minimum, fu (Mpa)	Tegangan Leleh minimum, fy (Mpa)	Peregangan minimum (%)
BJ 34	340	210	22
BJ 37	370	240	20
BJ 41	410	250	18
BJ 50	500	290	16
BJ 55	550	410	13

Sifat-sifat mekanis baja struktural lainnya yang dibutuhkan dalam perencanaan struktur baja adalah sebagai berikut:

Modulus elastisitas : E = 200.000MPa
Modulus geser : G = 80.000 MPa
Angka poisson : μ = 0,3
Koefisien pemuaian : α = 12 x 10-6 per°C

b. Perencanaan Komponen Struktur

iii. Struktur Tarik

Mengacu pada AISC 360-10 Chapter D sebagai berikut:

- Kekuatan desain harus memenuhi persamaan berikut untuk pelelehan pada penampang bruto

$$Pn = Fy.Ag \qquad (2.22)$$

ϕ = 0,9 (LRFD) Ω = 1,67 (ASD)

- Untuk ruptur pada penampang netto:

$$Pn = Fu.Ae \qquad (2.23)$$

ϕ = 0,75 (LRFD) Ω = 2 (ASD)

iv. Struktur Tekan

Perhitungan struktur tekan baja mengacu pada AISC 360-10 Chapter E, sebagai berikut:

- Komponen struktur yang mengalami gaya tekan harus memenuhi persyaratan berikut:

$$Pn = Fcr\ Ag \qquad (2.24)$$

$\phi = 0{,}9$ (LRFD) $\Omega = 1{,}67$ (ASD)

Dengan Fcr dihitung dalam chapter E sesuai dengan kriteria penampang yang digunakan.

- Persyaratan kelangsingan:

Komponen struktur tekan harus memenuhi persyaratan kelangsingan sebagai berikut:

$$\lambda = \frac{Lk}{r} \leq 140 \qquad (2.25)$$

Dengan,

Lk : panjang efektif

r : jari-jari girasi penampang

Untuk rasio lebar tebal elemen penampang λr dapat dilihat pada AISC 360-10 Table B4.1a

v. Struktur Lentur

Perhitungan struktur lentur baja mengacu pada AISC 360-10 Chapter F. Kekuatan desain elemen struktur lentur harus memenuhi persamaan berikut:

$Mr \leq Mc = \phi\ Mn$ (LRFD)

$Mr \leq Mc = Mn/\Omega$ (ASD)

Dengan,

Mr : moment required (momen akibat gaya dalam)

Mc : moment capacity (kapasitas tahanan momen elemen struktur)

Mn : moment nominal (dihitung berdasarkan kriteria masing-masing penampang sesuai dengan klasifikasi pada TABLE USER NOTE F1.1 AISC 360-10, dan juga diatur dalam chapter F).

vi. Struktur Geser

Perhitungan untuk struktur geser secara keseluruhan diatur dalam AISC 360-10 Chapter G, dengan kriteria desain geser sebagai berikut:

$Vr \leq Vc = \phi\ Vn$ (LRFD)

$Vr \leq Vc = Vn/\Omega$ (ASD)

Dengan nilai Vn didapatkan berdasarkan kriteria penampang yang diatur dalam chapter G.

2.5.2. Perhitungan Struktur Beton

Perhitungan struktur beton untuk pylon mengacu pada SNI T-12-2004. Pylon didesain dengan mempertimbangkan gaya aksial dan lentur menggunakan metode interaksi.

a. Analisa Struktur Tekan

Desain kekuatan lentur dan aksial komponen struktur tekan pada pylon dijelaskan dalam Pasal 5.3.3 SNI T-12-2004 sebagai berikut:

$$\phi Pn(max) = 0{,}8\phi[0{,}85fc'(Ag - Ast + fyAst)] \quad (2.26)$$

Dalam perencanaan momen lentur minimum harus diambil tidak kurang dari 0,05h Nu sesuai Pasal 5.7.3 SNI T-12-2004.

Sedangkan dalam perencanaanya kolom dibagi menjadi dua jenis, yaitu kolom pendek dan kolom langsing. Pengelompokan tersebut dijelaskan dalam Pasal 5.7.6 SNI T-12-2004. Pengaruh kelangsingan dapat diabaikan apabila persamaan berikut terpenuhi.

$$\frac{klu}{r} \leq 22 \quad (2.27)$$

Dengan,

lu : panjang bebas komponen tekan

r : jari-jari girasi penampang kolom = $\sqrt{\frac{lx}{A}}$

k : faktor panjang efektif (ditentukan dengan gambar berikut)

Tabel 2. 12 Faktor Panjang Efektif(SNI T-12-2004)

TABLE C-A-7.1
Approximate Values of Effective Length Factor, *K*

	(a)	(b)	(c)	(d)	(e)	(f)
Buckled shape of column is shown by dashed line	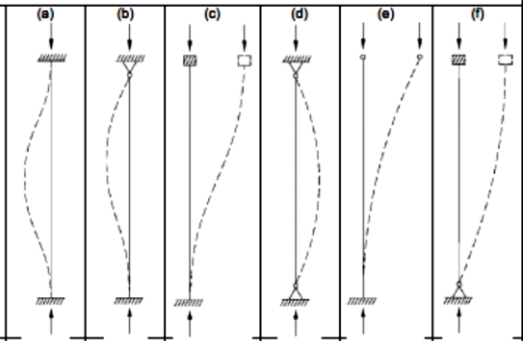					
Theoretical *K* value	0.5	0.7	1.0	1.0	2.0	2.0
Recommended design value when ideal conditions are approximated	0.65	0.80	1.2	1.0	2.1	2.0
End condition code	Rotation fixed and translation fixed Rotation free and translation fixed Rotation fixed and translation free Rotation free and translation free					

Pada kolom langsing, fakor perbesaran momen harus diperhitungkan dengan mengelompokan kolom menjadi kolom bergoyang dan tidak bergoyang. Kolom dianggap tak bergoyang apabila nilai dari persamaan berikut terpenuhi.

$$Q = \frac{\Sigma Pu \Delta o}{Vulc} \leq 0{,}05 \qquad (2.28)$$

Dengan,

ΣPu : jumlah beban vertikal terfaktor pada tingkat yang ditinjau
Vu : gaya geser total pada tingkat yang ditinjau
Δo : simpangan relatif antar tingkat ordepertama akibat Vu

i. Kolom Tak Bergoyang

Untuk struktur tak bergoyang, perbesaran momen dihitung berdasarkan Pasal 5.7.6.1 SNI T-12-2004 sebagai berikut:

$$M_c = \delta_{ns} \cdot M_2 \qquad (2.29)$$

Dengan,

M_c : momen terfaktor ang diperbesar

M_2 : momen terfaktor

δ_{ns} : faktor perbesaran momen yang dihitung sebagai berikut

$$\delta_{ns} = \frac{\mathrm{Cm}}{1\frac{Pu}{0,75Pc}} > 1,0 \qquad (2.30)$$

Untuk komponen struktur yang tak bergoyang dan tanpa beban transversal di antara tumpuan, maka Cm diambil sebagai berikut:

$$Cm = 0,6 + 0,4\left(\frac{M1}{M2}\right) > 0,4 \qquad (2.31)$$

Untuk komponen struktur dengan beban tranversal Cm diambil sama dengan 1,0.

ii. Kolom Bergoyang

Untuk struktur bergoyang, perbesaran momen dihitung berdasarkan Pasal 5.7.6.2 SNI T-12-2004 sebagai berikut:

Momen M1 dan M2 pada ujung-ujung komponen struktur tekan harus diambil sebesar:

$$M1 = M1ns + \delta sM1s \qquad (2.32)$$

$$M2 = M2ns + \delta sM2s \qquad (2.33)$$

Nilai δsMs dihitung sebagai berikut:

$$\delta sMs = \frac{Ms}{1-Q} \geq Ms \qquad (2.34)$$

Apabila δs Ms yang dihitung lebih dari 1,5, maka δs Ms dihitung dengan persamaan berikut:

$$\delta sMs = \frac{Ms}{1-\frac{\Sigma Pu}{0,75\Sigma Pc}} \geq Ms \qquad (2.35)$$

Untuk mempermudah analisis perhitungan tulangan kolom digunakan program bantu PCACol.

b. Peryaratan Tulangan Memanjang Kolom

Ketentuan luas tulangan memanjang kolom diatur dalam Pasal 5.7.8.1 SNI T-12-2004 sebagai berikut:

$$0{,}01Ag \leq Ast \leq 0{,}08Ag \qquad (2.36)$$

Jarak bersih minimum antar tulangan sejejar, seikat tulangan dan sejenisnya tidak boleh kurang dari:

- 1,5 kali ukuran nominal maksimum agregat.
- 1,5 kali diameter tulangan.
- 40 mm.

c. Ketentuan Tulangan Sengkang

Ukuran tulangan sengkang atau spiral tidak boleh kurang dari ketentuan berikut:

Jarak antara sengkang atau spiral tidak melebihi harga terkecil dari:

- hc atau 15 db untuk tulangan tunggal.
- 0,5 hc atau7,5 db untuk tulangan kelompok.
- 300 mm.

d. Desain Tulangan Geser Pylon

Kekuatan geser untuk struktur pylon direncanakan sebagai berikut:

$$Vu \leq \phi Vn \qquad (2.37)$$

Kekuatan geser nominal dihitung sebagai berikut:

$$Vn = Vc + Vs \qquad (2.38)$$

Vc pada struktur yang dibebani tekan aksial dihitung sebagai berikut:

$$Vc = \left(1 + \frac{Nu}{14Ag}\right)\left(\frac{\sqrt{fc'}}{6}\right).bw.d \qquad (2.39)$$

Sedangkan kekuatan geser tulangan Vs dihitung sebagai berikut:

$$Vs = \frac{Av.fy.d}{s} \qquad (2.40)$$

Jarak antar tulangan geser maksimum ditentukan sebagai berikut:

- Smax = d/2 atau 600 mm (diambil nilai terkecil)
  bila $Vs \leq \frac{1}{3}\sqrt{fc'}bw.d$
- Smax = d/4 atau 300 mm (diambil nilai terkecil)

bila $Vs > \frac{1}{3}\sqrt{fc'}bw.d$

e. Desain Tulangan Torsi Pylon

Pengaruh torsi dapat diabaikan apabila momen torsi terfaktor kurang dari:

$$\phi 0{,}083\lambda\sqrt{fc'}\left(\frac{Acp^2}{p_{cp}}\right)\sqrt{1+\frac{Nu}{0{,}33Ag.\lambda\sqrt{fc'}}} \quad (2.41)$$

Dimensi penampang untuk struktur yang dibebani torsi harus memenuhi persyaratan berikut:

$$\sqrt{\left(\frac{V_u}{b_w d}\right)^2+\left(\frac{T_u p_h}{1{,}7A_{oh}^2}\right)^2} \leq \left(\frac{V_c}{b_w d}+0{,}66\sqrt{fc'}\right) \quad (2.42)$$

Apabila diperlukan tulangan torsi, maka kuat rencana torsi dihitung sebagai berikut:

$$\phi T_n \geq T_u \quad (2.43)$$

Kuat torsi nominal Tn dihitung sebagai berikut:

$$T_n = \frac{2A_0 A_t f_{yt}}{s} cot\theta \quad (2.44)$$

Nilai Ao diambil sebesar 0,85Aoh, di mana Aoh merupakan luasan yang dibatasi oleh tulangan Sengkang tertutup. Sedangkan θ diambil sebesar 45°.

Luas tulangan longitudinal tambahan untuk tulangan torsi, Al, diambil sebesar:

$$A_l = \frac{A_t}{s} p_h \left(\frac{f_{yt}}{f_y}\right) cot^2\theta \quad (2.45)$$

2.5.3. Perhitungan Bangunan Bawah

- Tekanan Tanah Lateral

Mengacu pada SNI 1725-2016 tekanan tanah laeral harus diasumsikan linier sebanding dengan kedalaman sebagai berikut :

$$\rho = k\gamma_s z \quad (2.46)$$

Dimana ,

ρ = Tekanan tanah lateral (kPa)

k = koefisien tekanan tanah lateral

k_a (koefisien tekanan tanah kondisi aktif) atau;

kp (koefisien tekanan tanah kondisi pasif)

γ_s = berat jenis tanak (kN/m3)

z = kedalaman diukur dari permukaan tanah (m)

$$k_a = \tan^2\left(45 - \frac{\phi}{2}\right) \quad (2.47)$$

ϕ = sudut geser material

Tabel 2. 13 Sudut Geser Berbagai Material (SNI 1725-2016)

Material	Sudut geser δ (°)
Beton pada material fondasi sebagai berikut :	
• Batuan	35
• Kerikil, campuran kerikil – pasir, pasir kasar	29 – 31
• Pasir halus hingga medium, pasir kelanauan medium hingga kasar, kerikil kelanauan atau berlempung	24 – 29
• Pasir halus, pasir kelanauan atau berlempung halus hingga medium	19 – 24
• Lanau kepasiran halus, lanau non plastis	17 – 19
• Lempung prakonsolidasi atau residual yang sangat teguh dan keras	22 – 26
• Lempung agak teguh hingga lempung teguh, dan lempung kelanauan	17 – 19
Pasangan bata pada material fondasi memiliki faktor geser yang sama	
Turap baja terhadap tanah berikut :	
• Kerikil, campuran kerikil – pasir, batuan bergradasi baik yang diisi pecahan	22
• Pasir, campuran pasir – kerikil berlanau, batuan keras berukuran tunggal	17
• Pasir berlanau, kerikil atau pasir bercampur lanau atau lempung	14
• Lanau kepasiran halus, lanau non plastis	11
Beton pracetak atau turap beton terhadap tanah berikut :	
• Kerikil, campuran kerikil – pasir, batuan bergradasi baik yang diisi pecahan	22 – 26
• Pasir, campuranpasir – kerikil berlanau, batuan keras berukuran tunggal	17 – 22
• Pasir berlanau, kerikil atau pasir bercampur lanau atau lempung	17
• Lanau kepasiran halus, lanau non plastis	14
Berbagai material struktural:	
• Batu bata pada batu bata, batuan beku dan metamorf:	
- Batuan lunak pada batuan lunak	35
- Batuan keras pada batuan lunak	33
- Batuan keras pada batuan keras	29
• Batu bata pada kayu dengan arah kembang kayu menyilang	26
• Baja pada baja pada hubungan turap	17

* : Sudut geser pada Tabel 6 hanya dapat digunakan bila tidak diperoleh data karakteristik tanah untuk mendukung analisis geoteknik

- Konstanta Pegas (*spring constant*)

Konstanta pegas (*spring constant*) K_v dari tiang dalam arah vertikal adilah suatu konstanta elastis yang dinyatakan sebagai gaya dalam arah vertikal yang menimbulkan pergeseran (displacement) sebesar satu satuan dalam arah vertikal pada kepala tiang. K_v dipakai untuk menghitung besarnya reaksi pada kepala tiang atau besarnya penurunan elastis (*elastic settlement*). (Nakazawa, 2000)

$$K_v = a.\frac{A_p.E_p}{l} \qquad (2.48)$$

Untuk tiang yang terbuat dari pipa baja

a = 0,027(l/D) + 0,2

Untuk tiang beton pratekan

a = 0,041(l/D) - 0,27

Untuk tiang yang dicor ditempat

a = 0,022(l/D) - 0,05

Dimana,

A_p = Luas penampang netto dari tiang (cm^2)

E_p = Modulus elastisitang tiang (kg/cm^2)

l = Panjang tiang (cm)

D = Diameter tiang (cm)

Rumus di atas dapat dipakai bila l/D ≥ 10.

Perkiraan koefisien k dari reaksi tanah dibawah permukaan, dalam arah mendatar :

$k = k_0.y^{-1/2}$ (Nakazawa, 2000)

$k_0 = 0{,}2.E_0.D^{-3/4}$

$E_0 = 28N$

Dimana ,

k_0 = harga k bila pergeseran pada permukaan dibuat sebesar 1 cm(kg/cm^3)

y = Besarnya pergeseran yang akan dicari (cm)

E_0 = Modulus deformasi tanah pondasi, biasanya diperkirakan dari = 28N dengan memakai harga N dari percobaan penetrasi standar (standard penetration test)

D = Diameter tiang (cm)

kx =ky = k x D x dz

- Daya Dukung Tanah

Daya dukung diperhitungkan berdasarkan data tanah yang ada.

Ru = Rp + Rf

= 40 NAp + N/5 As (Varghese, 2012)

Dimana :

Ru = Daya dukung ultimate

Rp = Daya dukung terpusat tiang

Rf = Gaya geser dinding tiang

Ap = Luas area bore pile

As = Luas selimut bore pile

BAB III
METODOLOGI

3.1. Bagan Alur Penulisan

Berikut adalah diagram alur metodologi perencanaan ulang struktur jembatan, dapat dilihat pada Gambar 3.1 .

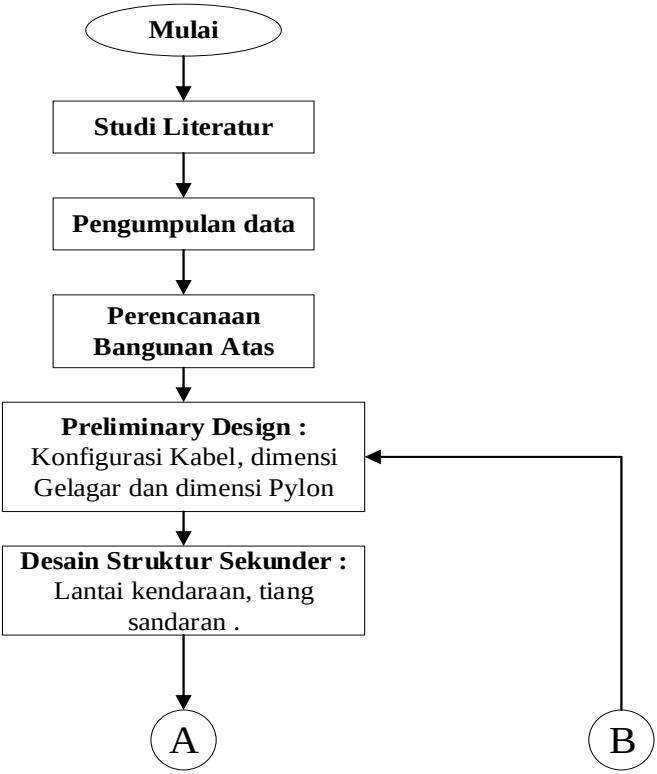

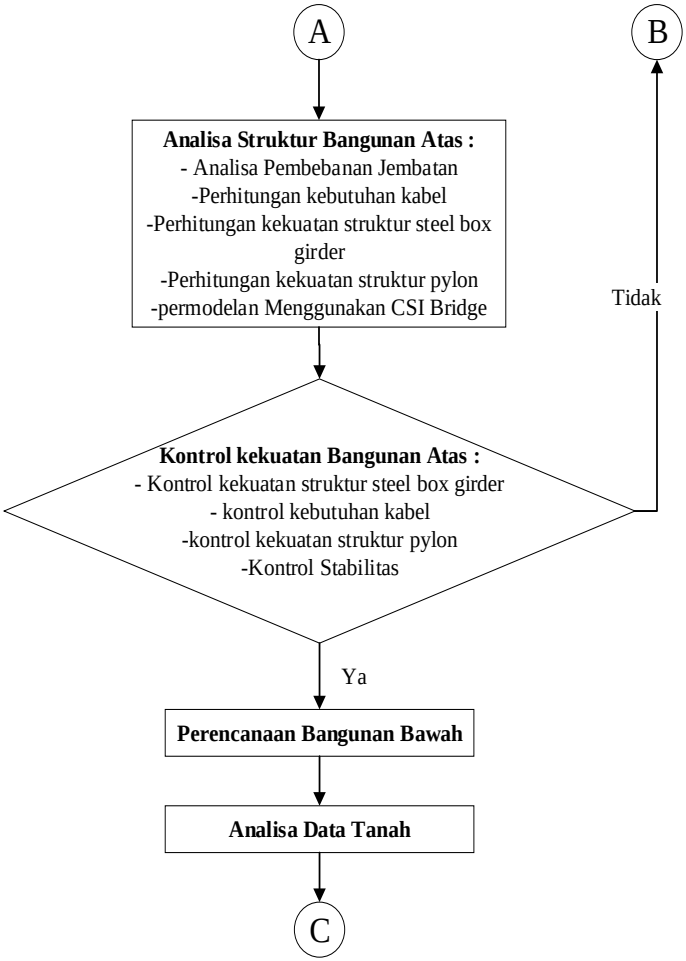
A
B
Analisa Struktur Bangunan Atas :
- Analisa Pembebanan Jembatan
-Perhitungan kebutuhan kabel
-Perhitungan kekuatan struktur steel box girder
-Perhitungan kekuatan struktur pylon
-permodelan Menggunakan CSI Bridge
Tidak
Kontrol kekuatan Bangunan Atas :
- Kontrol kekuatan struktur steel box girder
- kontrol kebutuhan kabel
-kontrol kekuatan struktur pylon
-Kontrol Stabilitas
Ya
Perencanaan Bangunan Bawah
Analisa Data Tanah
C

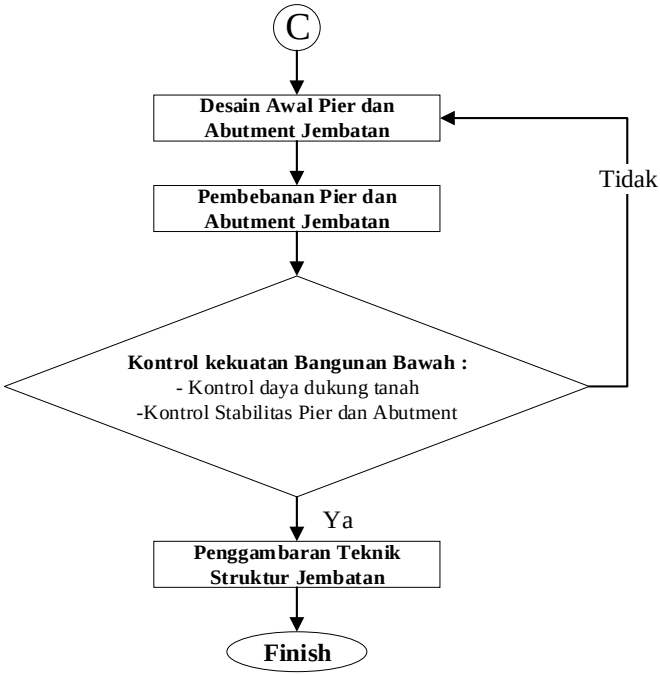

Gambar 3. 1 Bagan Alur Metodologi Perencanaan Jembatan

3.2. Penjelasan Diagram Alur

Diagram alir di atas merupakan tahapan perancangan jembatan *cable-stayed* dalam proyek akhir ini, berikut adalah penjelasan dari setiap bagian diagram alir.

3.2.1. Studi Literatur

Literatur yang digunakan terdiri dari peraturan-peraturan perencanaan yang berlaku dan buku-buku tentang perencanaan jembatan *Cable-Stayed.* Berikut adalah literatur yang digunakan dalam penyusunan proyek akhir mengenai perencanaan Jembatan *Cable-Stayed* :

1. Kementrian PU 2015 “Pedoman Perencanaan Teknis Jembatan Beruji Kabel”
2. SNI T-12-2004 “Perencanaan Struktur Beton untuk Jembatan”(Badan Standardisasi Nasional Indonesia, 2004)
3. SNI 1725-2016 “Pembebanan untuk Jembatan”(Badan Standardisasi Nasional Indonesia, 2016a)
4. SNI 2833-2013 “Perencanaan Jembatan terhadap Beban Gempa”(Badan Standardisasi Nasional Indonesia, 2016b)
5. AASHTO LRFD 2017 “Bridges Design Specifsication”
6. Gimsing, N. J, “Cable Styed Bridges- Past, Present and Future”

3.2.2. Pengumpulan Data

Data Perencanaan jembatan awal yang diperoleh merupakan data dari Dinas Pekerjaan Umum Kabupaten Malang selaku Pejabat Pembuat Komitmen proyek Jalan Lintas Selatan paket pembangunan jalan Balekambang-Kedungsalam. Data yang diperoleh terdiri dari data gambar struktur rencana jembatan (Lihat Gambar 3.2), data layout site-plan dan data tanah (Lihat Tabel 3.1).

Nama	: Jembatan Umbul Kaji STA 13+805
Lokasi	: Jalan Lintas Selatan Kabupaten Malang
Tipe Jembatan	: Jembatan Beton Pratekan Girder I
Panjang Jembatan	: 120 m
Lebar Jembatan	: 9 meter
Data tanah	: terlampir
Jenis bangunan bawah	: Pondasi Bore-Pile

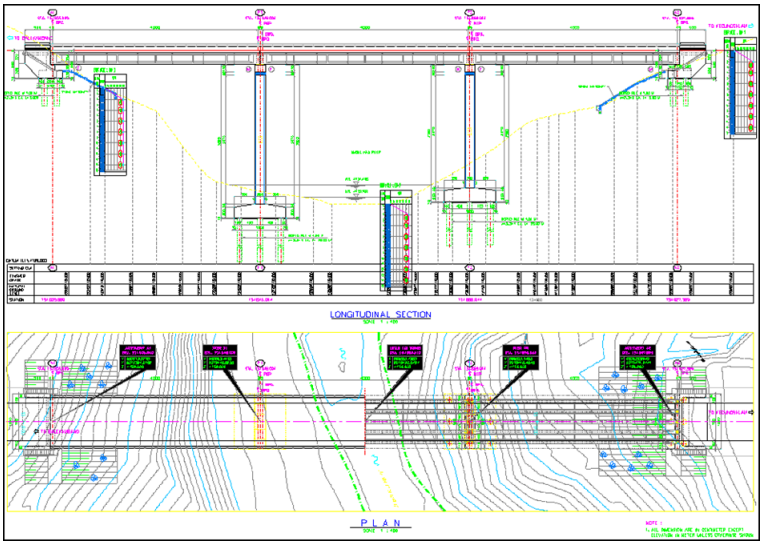

Gambar 3. 2 Layout Plan dan Potongan Memanjang Jembatan

Tabel 3. 1 Data tanah N-SPT

Kedalaman	Nilai N-SPT		
	BH-1	BH-2	BH-3
0	0	0	0
2	60	60	60
4	60	60	60
6	60	60	60
8	60	60	60
10	60	60	60
12	60	60	60
14	60	60	60
16	60	60	60

3.2.3. Preliminary Design

Langkah awal dalam mendesain sebuah struktur jembatan adalah melakukan preliminary design. Dalam preliminary design, ditentukan dimensi awal dari masing-masing elemen struktur jembatan. Penentuan dimensi ini berdasarkan kaidah kaidah yang berlaku seperti peraturan-peraturan atau literatur yang berasal dari buku. Preliminary design dalam desain struktur jembatan cable-stayed ini dibagi menjadi dua kelompok, yaitu preliminary design geometris jembatan dan preliminary design elemen strukur jembatan. Hal-hal yang mencakup preliminary design geometris jembatan meliputi:

a. Penentuan panjang jembatan.
b. Penentuan lebar dan jumlah lajur jalan.
c. Penentuan elevasi jembatan.
d. Pengaturan posisi pylon.

Sedangkan hal-hal yang mencakup preliminary design elemen struktur jembatan meliputi:

a. Penentuan dimensi steel box girder.

Dek jembatan didesain menggunakan box girder dengan material baja. Baja dipilih karena memiliki kekuatan yang tinggi dengan dimensi yang relatif lebih kecil dibandingkan baja. Selain itu baja memberikan kemudahan dari segi pelaksanaan pekerjaan. Dalam desain ini dipilih twin steel box girder.

b. Penentuan konfigurasi, dimensi dan jarak antar kabel.

Penentuan susunan kabel arah melintang dan memanjang jembatan. Dalam desain ini dipilih konfigurasi kabel arah melintang dengan model dua bidang (Double plane). Sedangkan untuk konfigurasi arah melintang dipilih model *Fan Pattern*.

c. Penentuan tinggi dan dimensi pylon.

Pylon/menara didesain menggunakan material beton bertulang. Tinggi pylon ditentukan berdasarkan Peraturan PU Nomor 08/SE/M2015. Sedangkan dimensi pylon ditentukan dari pembagian gaya aksial taksiran pada pylon yang dihitung sesuai Pasal 11.2.1 Peraturan PU Nomor 08/SE/M2015 kemudian dibagi

dengan mutu beton yang digunakan. Untuk tipe menara/pylon digunakan model kolom tunggal (single plane) yang ditempatkan di tengah cross section dek jembatan. Hal ini disesuaikan dengan konfigurasi susunan kabel arah melintang yang menggunakan model satu bidang.

3.2.4. Analisa Struktur Bangunan Atas

- **Pembebanan Struktur Jembatan**

Setelah melakukan preliminary design maka dilakukan pembebanan terhadap struktur jembatan. Pembebanan ditentukan berdasarkan SNI 1725 2016 tentang "Pembebanan untuk Jembatan".Pengelompokan pembebanan yang ditentukan meliputi:

1. Pembebanan pada Struktur Sekunder
   a. Pembebanan pada trotoar (mengacu pada Pasal 8.9 SNI 1725 2016).
   b. Pembebanan pada railing (mengacu pada Pasal 11 SNI 1725 2016).
2. Pembebanan pada Struktur Utama
   a. Pembebanan pada lantai kendaraan.

Beban pada lantai kendaraan berupa beban permanen dan beban lalu lintas. Beban permanen berupa berat sendiri box girder, pelat lanai kendaraan, lapisan apal, dan beban mati tambahan lain dengan mengacu pada Pasal 7 SNI 1725 2016. Sedangkan beban lalu lintas yaitu beban lajur yang terdiri atas beban terbagi rata (BTR) dan beban garis (BGT), beban truk (T), dan gaya rem (TB). Penentuan beban lalu lintas rencana jembatan mengacu pada Pasal 8 SNI 1725 2016.

b. Pemodelan beban angin.

Penentuan beban angin mengacu pada Pasal 9.6 SNI 1725 2016.

c. Pemodelan beban gempa.

Penentuan beban gempa mengacu pada RSNI T 2833 2013.

d. Pembebanan aksi lingkungan lainnya.

Selebihnya untuk beban akibat aksi lingkungan lainnya yang mungkin untuk diperhitungkan mengacu pada Pasal 9 SNI 1725 2016.

3. Kombinasi Pembebanan

Kombinasi pembebanan untuk struktur jembatan cable-stayed dilakukan berdasarkan ketentuan Pasal 7.4 Peraturan Kementerian Pekerjaan Umum Nomor 08/SE/2015 tentang Pedoman Perencanaan Teknis Jembatan Beruji Kabel.

- **Pemodelan Struktur**

Pemodelan struktur untuk desain jembatan cable-stayed dilakukan menggunakan program bantu CSI Bridge. Hal ini dilakukan baik untuk keperluan penentuan gaya dalam, stabilitas, maupun analisa metode pelaksanaan.

3.2.5. Kontrol Kekuatan Bangunan Atas

Kontrol kekuatan struktur utama dilakukan setelah pemodelan struktur dan didapatkan gaya dalam dalam masingmasing elemen struktur utama. Kontrol kekuatan struktur dilakukan berdasarkan dimensi yang telah ditentukan pada preliminary design. Apabila hasil kontrol elemen kekuatan struktur menunjukkan elemen tersebut tidak memenuhi syarat, maka dilakukan desain ulang pada preliminary.

Elemen-elemen struktur utama yang perlu dikontrol meliputi:

a. Desain struktur steel box girder:
    1. Kontrol kekuatan steel box girder.
    2. Kontrol lendutan.
    3. Sambungan segmental antar box girder.

b. Desain kebutuhan kabel:
   1. Menghitung kebutuhan kabel dengan dimensi yang telah ditentukan dalam preliminary design berdasarkan gaya dalam hasil pemodelan struktur.
c. Desain struktur pylon:
   1. Kontrol Lendutan pada ujung pylon

3.2.6. Perencanaan Bangunan Bawah

Perancangan bangunan bawah jembatan terdiri dari beberapa tahap, meliputi:

1. Merancang dimensi struktur

Dimensi struktur bangunan bawah menyesuaikan kondisi layout sekitar jembatan, dimensi bangunan atas dan referensi peraturan yang digunakan.

2. Pembebanan struktur bangunan bawah

Menganalisa seluruh beban pada struktur bangunan bawah termasuk beban yang direncanakan untuk bangunan atas, adapun diantaranya:

a. Beban Mati
b. Beban Lalu Lintas
c. Beban Akibat Tekanan Tanah
d. Beban Gempa

3. Penulangan bangunan bawah

Penulangan pada bangunan bawah meliputi tulangan lentur dan geser

3.2.7. Kontrol Kekuatan Bangunan Bawah

Kontrol pada bangunan bawah meliputi kontrol momen guling pada abutmen dan pilar jembatan. Pada perancangan pondasi bore pile juga dilakukan kontrol terhadap gaya yang terjadi pada setiap tiang pondasi.

3.2.8. Perencanaan Metode Pelaksanaan

Metode pelaksanaan dilakukan dengan cara kantilever, karena pada kondisi lapangan tidak memungkinkan untuk dipasang perancah (penyokong sementara).

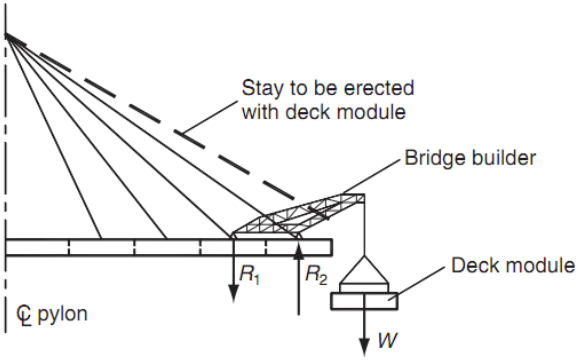

Gambar 3. 3 Metode Pelaksanaan Kantilever

3.2.9. Penggambaran Teknik

Hasil perhitungan dan perancanagan struktur bangunan atas dan bangunan bawah jembatan dituangkan dalam bentuk gambar teknik yang meliputi

1. Gambar layout jembatan
2. Gambar tampak jembatan
3. Gambar potongan jembatan
4. Gambar segmen steel box girder
5. Gambar layout dan potongan kabel
6. Gambar penulangan pylon
7. Gambar bangunan bawah bawah jembatan

BAB IV
PRELIMINARY DESIGN

Sebelum melakukan perhitungan struktur sekunder dan pemodelan struktur, perlu dilakukan perkiraan dimensi awal. Dimensi awal yang perlu ditaksirkan ialah susunan kabel, dimensi gelagar, kabel dan pylon yang akan digunakan sebagai data awal dalam analisa struktur.

4.1. Premilinary Design

4.1.1. Konfigurasi Susunan Kabel

Konfigurasi susunan kabel pada arah melintang berupa system dua bidang, sedangkan untuk arah memanjang berupa tipe kipas dengan detail sebagai berikut:

- Jarak kabel pada gelagar menurut dalam pasal 4.4.3 Peraturan PU nomor 08/SE/M/2015 untuk gelagar baja (15 m – 25 m) namun pada desain ini dipakai jarak kabel pada gelagar 8 m seperti pada gambar 4.1.
- Tinggi pylon(H) dapat diperkirakan awal tinggi *pylon* yaitu sebesar 0.25 – 0.45 dari bentang jembatan terpanjang.
  0,25 L < H < 0,45 L
  0,25 x 120 < H < 0,45 x 120
  30 m < H < 48 m
  Pada desain ini dipakai ≈ 50 m
- Jarak antar kabel pada pylon pada desain ini dipakai jarak 1.5 m

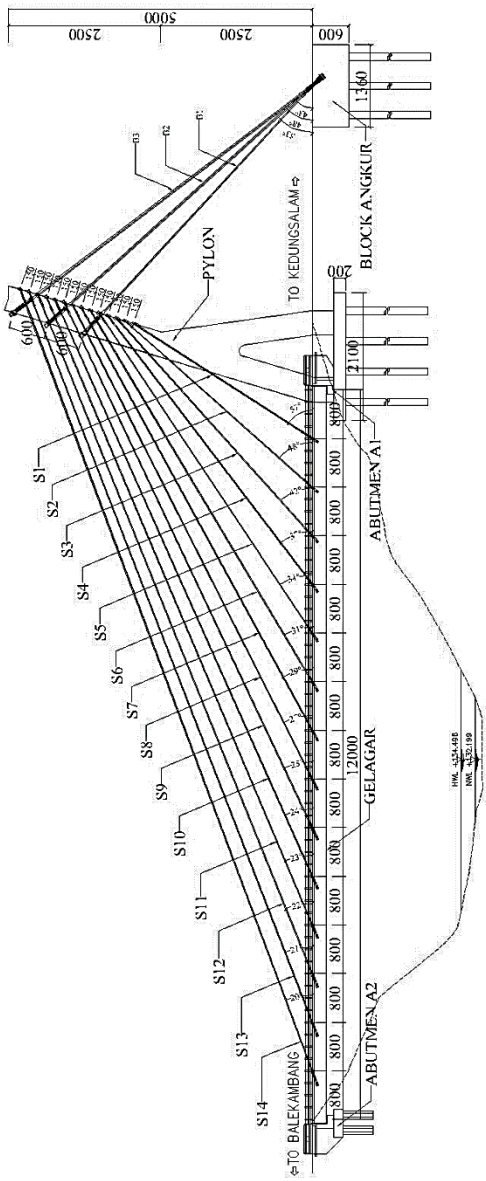

Gambar 4. 1 Potongan Memanjang Jembatan

Berikut ilustrasi susunan kabel arah melintang jembatan dapat dilihat pada Gambar 4.2

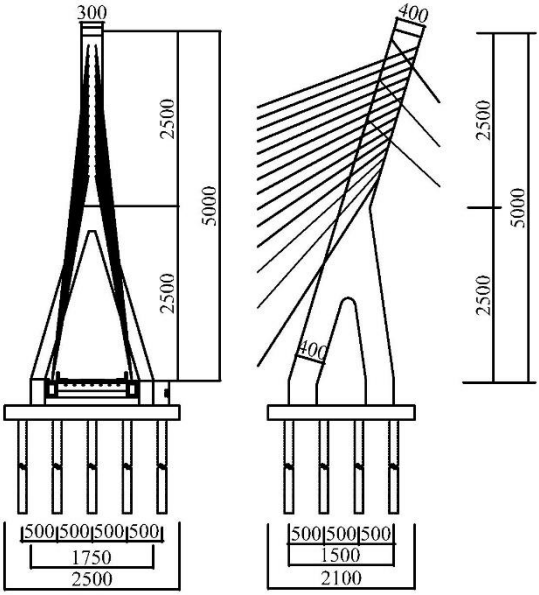

Gambar 4. 2 Susunan Kabel Arah Melintang Berupa Tipe Ganda

4.1.2. Dimensi Gelagar Utama

Dalam pasal 4.6.2 Peraturan PU nomor 08/SE/M/2015 dijelaksan tentang estimasi awal tinggi gelagar utama dapat ditentukan 1/50 – 1/70 dari bentang utama.

Tinggi gelagar utama $\frac{L}{50} > h > \frac{L}{70}$

$= \frac{120}{50} > h > \frac{120}{70}$

= 2,4 m > h> 1,714 m

Pada desain ini direncanakan tinggi *box girder* dengan perkiraan awal :

h = 2 m
b = 1,5 m
As = 0,462 m^2
untuk lebih detail nya dapat dilihat pada Gambar 4.3

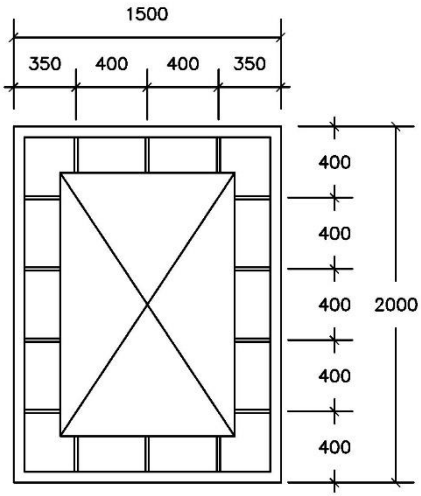

Gambar 4. 3 *Steel Box Girder*

4.1.3. Dimensi Gelagar Memanjang dan melintang

1) Gelagar Memanjang

Direncanakan menggunakan profil WF dengan tinggi balok (d) ≥ (L/12), dimana L = Panjang balok

d ≥ L/12
≥ 4/12 = 0,33 m

Direncanakan menggunakan profil WF 400.200.8.13

d	= 400 mm	tw	= 8 mm
bf	= 200 mm	tf	= 13 mm
r	= 16 mm	w	= 66 kg/m
As	= 83,37 cm^2		

Sifat mekanis baja structural menggunakan BJ 50
fu = 500 Mpa
fy = 290 Mpa

2) Gelagar Melintang
Direncanakan menggunakan profil WF dimana tinggi balok (d) ≥ L/9, dimana L = Panjang balok.
d ≥ L/9
≥ 10/9 = 1,111 m
Direncanakan menggunakan profil WF 1200.400.22.36

d	= 1200 mm	tw	= 22 mm
bf	= 400 mm	tf	= 36 mm
r	= 30 mm	w	= 427 kg/m
As	= 543,9 cm^2		

Sifat mekanis baja structural menggunakan BJ 55
fu = 550 Mpa
fy = 410 Mpa

4.1.4. Dimensi Kabel dan Anker

Mengacu pada RSNI T – 03 – 2005 pasal 12.6 (Badan Standardisasi Nasional Indonesia, 2005) Kabel pemikul utama yang dipergunakan untuk struktur-struktur jembatan kabel dan jembatan gantung harus dibuat dari material mutu tinggi dengan kuat tarik minimum 1800 N/mm^2 .

Terdapat dua jenis kabel pararel *VSL 7-wire strand* yang dapat digunakan untuk jembatan kabel, lihat tabel 4.1 :

Tabel 4. 1 Mutu Kabel

Standard	ASTM A 416-05 Grade 270	Euronome 138-3
∅ (mm)	15,2	15,7
A_s (mm^2)	140	150
fu (f_{ijin}=0.7fu)(Mpa)	1860 (1302)	1770 (1239)
Ukuran Anker	7, 12, 9, 31, 37, 61 dan 91 strand	

Dalam perencanaan ini digunakan kabel tipe ASTM A 416-06 Grade 270.

Dimensi awal kabel didekatkan dengan persamaan berikut:

Asc = $\frac{P_{ni}}{f_{ni}}$ (Irawan & Tristanto, 2011)

$$P_{ni} = \frac{(0.5 \cdot (\lambda_i + \lambda_{i+1}) \cdot W + P_{BGT}}{\sin \alpha_i}$$

$$W = DL + q_{BTR}$$

$$f_{ni} = f_{ijin} - \gamma_{cb} \cdot \frac{a_1}{Cos\ \alpha_i}$$

Dimana ,

Asc = Luas penampang kabel (mm)

Pni = beban yang bekerja pada dek (kN)

f_{ni} = tegangan ijin kabel netto (kN/m^2)

f_{ijin} = tegangan ijin kabel (Mpa)

λ_i = jarak antar kabel i (m)

a_1 = jarak dari pylon ke kabel i (m)

α_i = sudut kemiringan kabel terhadap bidang horizontal

γ_{cb} = densitas kabel (77 kN/m^3)

Perhitungan beban :

Berat jenis :

γ_{Baja} = 78,5 kN/m^3

γ_{Beton} = 24 kN/m^3

γ_{Aspal} = 22 kN/m^3

Dead Load (**DL**)

- Box Girder = γ_{Baja} x As x FB x n
  = 78,5 kN/m^3 x 0,462 m^2 x 1,1 x 2
  = 79,718 kN/m

- Gelagar Memanjang = γ_{Baja} x As x FB x n
  = 78,5 kN/m^3 x 0,00834 m^2 x 1,1 x 7
  = 5,077 kN/m

- Gelagar Melintang = γ_{Baja} x As x FB x n
  = 78,5 kN/m^3 x 0,0496 m^2 x 1,1 x 2
  = 8,566 kN/m

- Pelat Beton = γ_{Beton} x tebal x lebar x FB
  = 24 kN/m^3 x 0,25 m x 10 m x 1,3
  = 78 kN/m

- Aspal = γ_{Aspal} x tebal x lebar
  = 22 kN/m^3 x 0,07 m x 7 m
  = 10,78 kN/m

Total Beban Mati (DL) = 182 kN/m
Beban per kabel = DL/2
= 182/2 = 91 kN/m

Live Load (**LL**)
- Beban Terbagi Rata (BTR)

BTR = 9 kN/m^2 ….(SNI 1725-2016)
qBTR = BTR x lebar lajur x FB
= 9 kN/m^2 x 7 m x 2
= 126 kN/m

- Beban Garis Terpusat(BGT)

BGT = 49 kN/m
P_{BGT} = BGT x Lebar lajur x FB
= 49 kN/m x 7 m x 2
= 686 kN

Tegangan ijin kabel = 0,45 fu
= 0,45 x 1860 Mpa
= 837 Mpa

Perhitungan luasan kabel yang dibutuhkan dapat dilihat pada tabel 4.2 dan tabel 4.3

Tabel 4. 2 Perhitungan Jumlah Strand Kabel S

No strand	α	sin α	cos α	λ (m)	λ +1 (m)	a1 (m)	Pni (kN)	fni (Mpa)	Asc (mm)	strand (n)
S1	57	0.84	0.54	8	8	8	2889	835.9	3456	23
S2	48	0.74	0.67	8	8	16	3260	835.1	3903	26
S3	42	0.67	0.74	8	8	24	3620	834.5	4339	29
S4	37	0.60	0.80	8	8	32	4025	833.9	4827	32
S5	34	0.56	0.83	8	8	40	4332	833.2	5199	35
S6	31	0.52	0.86	8	8	48	4704	832.6	5649	38
S7	29	0.48	0.87	8	8	56	4997	832	6006	40
S8	27	0.45	0.89	8	8	64	5336	831.4	6418	43
S9	25	0.42	0.91	8	8	72	5732	830.8	6900	46
S10	24	0.41	0.91	8	8	80	5956	830.2	7175	48
S11	23	0.39	0.92	8	8	88	6200	829.5	7474	50
S12	22	0.37	0.93	8	8	96	6467	828.9	7802	52
S13	21	0.36	0.93	8	8	104	6760	828.3	8161	54
S14	20	0.34	0.94	8	8	112	7083	827.7	8558	57

Untuk mencari kebutuhan jumlah kabel B digunakan persamaan sebagai berikut:

$$H = Pni \times \cos \alpha$$

$$P_{B1} = \frac{\sum_{S1}^{S6} H}{Cos\ \alpha}$$

$$P_{B2} = \frac{\sum_{S7}^{S10} H}{Cos\ \alpha}$$

$$P_{B3} = \frac{\sum_{S11}^{S14} H}{Cos\ \alpha}$$

Dimana,

H = Gaya Horizontal kabel

Tabel 4. 3 Perhitungan Jumlah Strand Kabel B

No strand	α	cos α	Pni (kN)	H (kN)
S1	57	0.545	2889	1573.2
S2	48	0.669	3260	2181.3
S3	42	0.743	3620	2690.5
S4	37	0.799	4025	3214.9
S5	34	0.829	4332	3591.6
S6	31	0.857	4704	4031.8
			Jumlah	17283.3
S7	29	0.875	4997	4370.4
S8	27	0.891	5336	4754.6
S9	25	0.906	5732	5195.2
S10	24	0.914	5956	5441.2
			Jumlah	19761.4
S11	23	0.921	6200	5707.2
S12	22	0.927	6467	5996.1
S13	21	0.934	6760	6311.0
S14	20	0.940	7083	6655.9
			Jumlah	24670.2

No strand	α	cos α	Pni (kN)	H (kN)	a1 (m)	fni (Mpa)	Asc (mm)	strand (n)
B1	43	0.731	23632	17283.3	50	831.67	28415.19	150
B2	48	0.669	29533	19761.4	50	831.17	35531.65	187
B3	53	0.602	40993	24670.2	50	830.52	49358.29	260

4.1.5. Struktur *Pylon*

Besarnya dimensi *pylon* diperkirakan berdasar nilai jumlah gaya aksial tekan kabel.

Material *pylon* = Beton bertulang

fc' = 40 Mpa

Besarnya gaya yang terjadi pada *pylon* akibat kabel dapat dilihat pada Gambar 4.4 dan tabel 4.4.

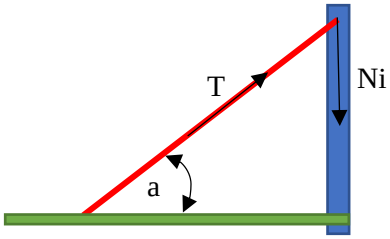

Gambar 4. 4 Ilustrasi Gaya pada Pylon

Tabel 4. 4 Rekapitulasi Gaya Yang Bekerja Pada Pylon

No	sudut a	sin a	T(kN)	Ni (kN)
1	57	0.838671	2888.579	2422.566
2	48	0.743145	3259.885	2422.566
3	42	0.669131	3620.469	2422.566
4	37	0.601815	4025.434	2422.566
5	34	0.559193	4332.255	2422.566
6	31	0.515038	4703.665	2422.566
7	29	0.48481	4996.944	2422.566
8	27	0.45399	5336.161	2422.566
9	25	0.422618	5732.281	2422.566
10	24	0.406737	5956.106	2422.566
11	23	0.390731	6200.086	2422.566
12	22	0.374607	6466.962	2422.566
13	21	0.358368	6759.998	2422.566
14	20	0.34202	7083.111	2422.566
B1	43	0.681998	23631.98	16116.97
B2	48	0.743145	29532.9	21947.22
B3	53	0.798636	40993.03	32738.49
			Total =	104718.6

Dimensi *pylon* :

A $= \frac{2.Ngi}{fc'}$

$= \frac{2\ x\ 104718.6103\ kN}{40000\ kN/m^2}$

= 5,2359305 m^2

= 52359,305 cm^2

Luas penampang direncanakan ;

A = b x (2b)

= $2b^2$

52359,305 cm^2 = $2b^2$

b^2 = 52359,305 cm^2 /2

b = $\sqrt{26179,65257\ cm^2}$

= 161,8 cm

h = 2b

= 2 x 161,8 cm

= 323,6 cm

Maka digunakan dimensi *pylon* b = 200 cm dan h = 400 cm untuk bagian bawah, sedangkan bagian atas digunakan b = 300 dan h = 400 cm.

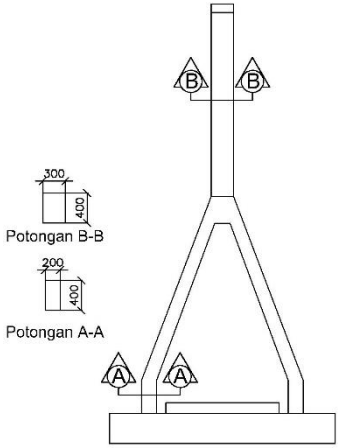

Gambar 4. 5 Hasil Preliminary *Pylon*

4.2. Perencanaan Sekunder

4.2.1. Perencanaan Pipa Sandaran

Mengacu pada RSNI T-02-2005 pasal 12.5 beban yang bekerja pada sandaran adalah berupa gaya horizontal dan vertikal sebesar w = 0,75 kN/m. Direncanakan sandaran menggunakan profil pipa dengan diameter 76,3 mm, lihat Gambar 4.6.

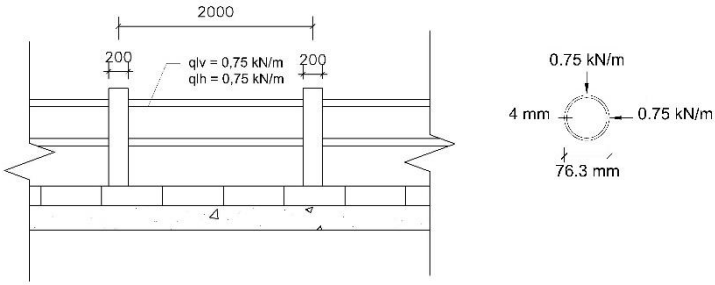

Gambar 4. 6 Beban pada Pipa Sandaran dan Profil Pipa Sandaran

- **Data teknis profil pipa :**

Diameter luar (d)		= 76,3 mm
Tebal dinding (t)		= 4 mm
Section Modulus (Zx)		= 15600 mm^3
Momen Inersia (Ix)		= 595000 mm^4
Section Area (A)		= 908,5 mm^2
Berat Pipa (q)		= 0,071 kN/m
Modulus Elastisitas		= 200000 Mpa
Mutu Baja	fy	= 240 Mpa
	Fu	= 370 Mpa
Jarak antar tiang (L)		= 2 m

- **Analisa pembebanan :**

1. Beban Vertikal

Beban sandaran pejalan kaki = 0,75 kN/m
Berat pipa sandaran = 0,071 kN/m +
q Vertikal = 0,821 kN/m

Momen vertikal (mv) = 1/8 x q x L^2
= 1/8 x 0,821 kN/m x $(2\ m)^2$
= 0,411 kNm

2. Beban Horizontal

q horizontal = 0,75 kN/m

Momen horizontal (mh) = 1/8 x q x L^2
= 1/8 x 0,75 kN/m x $(2\ m)^2$
= 0,4 kNm

Momen resultan (mr) = $\sqrt{mv^2 + mh^2}$
= $\sqrt{(0{,}411)^2 + (0{,}4)^2}$
= 0,56 kNm
= 556110.08 Nmm

- **Kontrol kapasitas penampang pipa**

Cek penampang

$$\frac{d}{t} < \frac{0{,}45\ E}{fy}$$

$$\frac{76{,}3\ \text{mm}}{4\ mm} < \frac{0{,}45\ 200000\ Mpa}{240\ Mpa}$$

19,075 < 375 **(OK)**

Mn = fy . Zx
Mn = 240 Mpa x 15600 mm^3
= 3744000 Nmm.

Mr < ϕMn
556110.08 Nmm < 0,9 x 3744000 Nmm
556110.08 Nmm < 3369600 Nmm **(OK)**

Cek rasio $\frac{Mr}{Mn} < 1$

$\frac{556110.08}{3369600}$ = 0,165 < 1 **(OK)**

- **Cek lendutan yang terjadi pada pipa**

Lendutan ijin = L/240
= 200 cm/240
= 0,83 cm
= 8,3 mm

Lendutan yang terjadi akibat gaya vertikal

$$\delta v = \frac{5\ x\ \ qv\ x\ \ l^4}{384\ x\ E\ x\ \ Ix}$$

$$= \frac{5\ x\ \ 0{,}821\ \text{kN/m}\ x\ \ 2^4}{384\ x\ \ 2.10^8\ x\ \ 5{,}95.10^{-7}}$$

= 0,00144 m
= 1,44 mm

Lendutan yang terjadi akibat gaya horizontal

$$\delta h = \frac{5\ x\ \ qh\ x\ \ l^4}{384\ x\ \ E\ x\ \ Ix}$$

$$= \frac{5\ x\ \ 0{,}75\ \text{kN/m}\ x\ \ 2^4}{384\ x\ \ 2.10^8\ kN/m2\ x\ 5{,}95\ x\ \ 10^{-7}}$$

= 0,00131 m
= 1,31 mm

Lendutan resultan

$$\delta r = \sqrt{\delta v^2 + \delta h^2}$$

$$= \sqrt{(1{,}44)^2 + (1{,}31)^2}$$

= 1,95 mm

Kontrol lendutan

δr < δijin

1,95 mm < 8,3 mm **(OK)**

4.2.2. Perencanaan Tiang Sandaran

- **Data perencanaan tiang sandaran :**

Tinggi (h)	= 1,2 m
Lebar (b)	= 0,2 m
Tebal (t)	= 0,2 m
Jarak antar tiang (dt)	= 2 m
γ Beton	= 24 kN/m^3
Berat pipa (w)	= 0,0713 kN/m

Untuk lebih jelasnya lihat Gambar 4.7.

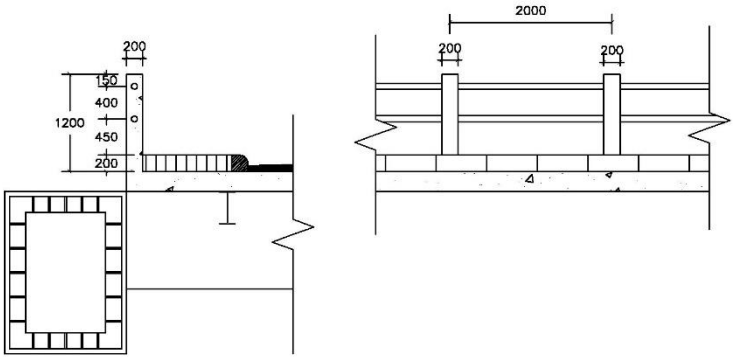

Gambar 4. 7 Rencana Tiang Sandaran

- **Analisa pembebanan**

Beban Mati (DL)

Berat sendiri tiang = b x t x h x γ x FB
= 0,2 m x0,2 m x 1,2 m x 24 kN/m^3 x 1,3
= 1,498 kN

Berat pipa sandaran = w x dt x FB x n
= 0,0713 kN/m x 2 m x 1,1 x 2
= 0,314 kN

PDL = 1,811 kN

Momen DL = P x $\frac{b}{2}$
= 1,811 kN x $\frac{0,2\ m}{2}$
= 0,1811 kNm

Beban Hidup (LL)

Beban pejalan kaki (qL) = 0,75 kN/m

Berat pejalan kaki (PLL) = qL x dt
= 0,75 kN/m x 2 m
= 1,5 kN

Momen LL = PLL x h
= 1,5 kN x 1,2 m
= 1,8 kNm

Pu = 1,2PDL + 1,6 PLL
= 1,2 x 1,1811 kN + 1,6 x 1,5 kN

= 5,054 kN

Mu = 1,2 MDL + 1,6 MLL
= 1,2 x 0,1811 kNm + 1,6 x 1,8 kNm
= 3,097 kNm
= 3097358,4 Nmm

- **Penulangan Tiang Sandaran**

Dimensi tiang sandaran
b = 200 mm
h = 200 mm
Selimut beton (decking) = 20 mm (RSNI T-12-2004, pasal 4.6.3)
Diameter tulangan utama Ø = 12 mm
Diameter tulangan sengkang Ø = 10 mm
fc' = 30 Mpa
fy = 240 Mpa
β1= 0,85 (RSNI T-12-2004, pasal 5.1.1.1.)
φ = 0,8 (RSNI T-12-2004, pasal 4.5.2)

1. Penulangan Lentur

d = h – decking – Ø sengkang – (0,5 Ø tul.utama)
= 200 mm – 30 mm – 10 mm – (0,5 . 12 mm)
= 154 mm

Rn $= \frac{Mu}{\varphi\ x\ \ b\ x\ \ d^2}$

$= \frac{3097358{,}4\ Nmm}{0{,}8\ x\ \ 200\ mm\ x\ \ (154\ mm)^2}$

= 0,816 N/mm^2

m $= \frac{fy}{0{,}85\ x\ \ fc'}$

$= \frac{240\ Mpa}{0{,}85\ x\ \ 30\ Mpa}$

= 9,411

ρmin $= \frac{1{,}4}{fy}$

$= \frac{1{,}4}{240}$ = 0,0058

ρb $= \frac{0{,}85\ x\ \ fc'\ x\ \ \beta 1}{fy}\ x\ \ \frac{600}{600+fy}$

$= \frac{0,85\ x\ \ 30\ x\ \ 0,85}{240}\ x\ \ \frac{600}{600+240}$

= 0,0645

ρmax = 0,75 x ρb

= 0,75 x 0,0645

= 0,0484

ρperlu $= \frac{1}{m}\left(1 - \sqrt{1 - \frac{2\ x\ \ m\ x\ \ Rn}{fy}}\right)$

$= \frac{1}{9,411}\left(1 - \sqrt{1 - \frac{2\ x\ 9,411\ x\ 0,816}{240}}\right)$

= 0,0035

Kontrol, ρmin < ρperlu < ρmax

Karena yang didapat ρperlu < ρmin maka dipakai ρmin = 0,0058

As perlu = ρ x b xd

= 0,0058 x 200 mm x 154 mm

= 179,67 mm^2

Dipakai tulangan lentur 4∅12

As pakai $= \frac{1}{4}\pi\emptyset^2 n$

$= \frac{1}{4}\pi 12^2 4$

= 452,57 mm^2

Cek , As perlu < As pakai

179,67 mm^2 < 452,57 mm^2

2. Penulangan geser

Vu = Pu = 5,054 kN

= 5053.584 N

Vc $= \left(\frac{\sqrt{fc'}}{6}\right)\ x\ b\ x\ d$

$= \left(\frac{\sqrt{30}}{6}\right)\ x\ 200\ x\ 154$

= 28116.425 N

φVc = 0,7 x 28116.425 N

= 19681.497 N

Kontrol, Vu < φVc

5053.584 N < 19681.497 N , maka tidak diperlukan tulangan geser, sehingga dipasang tulangan geser minimum dengan jarak maksimal.

Ø = 12 mm

s = 200 mm (RSNI T-12-2004, Pasal 9.3.1)

- **Kontrol kemampuan penampang**

a $= \frac{As\ x\ fy}{0{,}85\ x\ fc'x\ \ b}$

$= \frac{452{,}57\ x\ 240}{0{,}85\ x\ 30\ x\ \ 200}$

= 21,297 mm

Mn aktual = As x fy x $\left(d - \frac{a}{2}\right)$

= 452,57 x 240 x (154 - $\frac{21{,}297}{2}$)

= 15570404 Nmm

= 15,57 kNm

Mn $= \frac{Mu}{\varphi}$

$= \frac{3097358{,}4}{0{,}8}$

= 3871698 Nmm

= 3,872 kNm

Cek syarat , Mn < Mn Aktual

3,872 kNm < 15,57 kNm **(OK)**

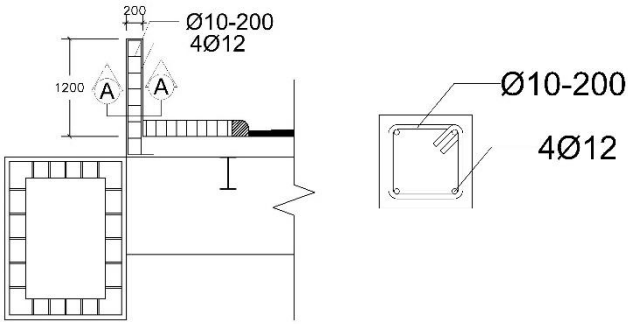

Gambar 4. 8 Penulangan Tiang Sandaran

4.2.3. Perencanaan Pelat Lantai Kendaraan

Perencanaa pelat lantai yang berfungsi sebagai jalan kendaraan pada jembatan harus mempunyai tebal minimum ts, yang memenuhi ketentuan dalam RSNI T-12-2004.

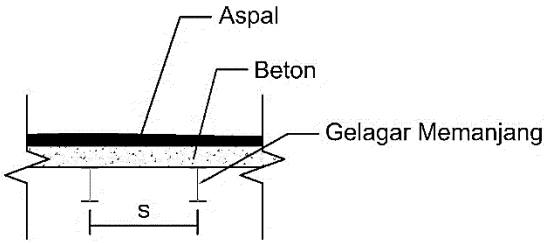

Gambar 4. 9 Lantai Kendaraan

Dimensi pelat = ts ≥ 200 mm
= ts ≥ 100+40.s (RSNI T-12-2004 Pasal 5.5.2)
= ts ≥ 100 + 40 x1,25 m
= 150 mm

Dipakai tebal pelat lantai = 250 mm

- **Data perencanaan :**

Tebal pelat lantai (ts) = 250 mm
Tebal aspal (ta) = 70 mm

jarak antar gelagar (s) = 1250 mm
mutu beton (fc') = 30 Mpa

- **Analis Pembebanan**

Beban Mati (MS)

Berat sendiri pelat = ts x γ Beton x b
= 0,25 m x 24 kN/m^3 x 1 m
= 6 kN/m

Beban Mati Tambahan (MA)

Berat aspal = ts x γ aspal x b
= 0,07 m x 22 kN/m^3 x 1 m
= 1,54 kN/m

Beban Hidup (LL)

Beban air hujan = tair x γ air x b
= 0,05 m x 9,8 kN/m^3 x 1 m
= 0,49 kN/m

Beban Truk

Faktor beban dinamis, DLA = 30%
Beban truk T = 112,5 kN
P_{TT} = T x (1+DLA)
= 112,5 kN x (1+0,3)
= 146,25 kN

Beban Angin (EW)

Beban angin struktur (EWs)

Tabel 4. 5 Nilai V0 dan Z0 (SNI 1725-2016)

Kondisi	Lahan Terbuka	Sub Urban	Kota
V0 (km/jam)	13,2	17,6	19,3
Z0 (mm)	70	1000	2500

V10 = VB = 90 s/d 126 km/jam (SNI 1725-2016 ps.9.6.1)
Z = 30 m = 30000 mm

Vdz = 2,5 x V0 x $\left(\frac{V10}{VB}\right) ln \frac{Z}{Z0}$
= 2,5 x 13,2 x $\left(\frac{100}{100}\right) ln \frac{30000}{70}$
= 199,9 km/jam
= 55,55 m/s

Tabel 4. 6 Tekanan angin dasar (SNI 1725-2016)

Komponen Bangunan Atas	Angin Tekan(Mpa)	Angin Hisap (Mpa)
Rangka,kolom dan pelengkung	0.0024	0.0012
Balok	0.0024	N/A
Permukaan Datar	0.0019	N/A

PD = Pb $\left(\frac{Vdz}{VB}\right)^2$

= 0,0019 $\left(\frac{19,99}{100}\right)^2$

= 0,0076 Mpa

= 759,96 kg/m^2

Beban angin yang diterima pelat

PD = PD x ts x 1 m

= 759,96 kg/m^2 x 0,25 m x 1 m

= 189,99 kg

= 1,9 kN

Pengaruh Temperatur

Temperatur rata-rata minimum = 15° C

Temperatur rata-rata maksimum = 40° C

Selisih temperatur = 40 -15

= 25° C

Kuat tekan beton (fc') = 30 Mpa

Koefisien α = 0,00001

Modulus Elastisitas = $4700\sqrt{fc'}$

= $4700\sqrt{30}$

= 25742,96 Mpa

Momen Inersia = 1/12 x b x h^3

= 1/12 x 1000 mm x (250 mm)^3

= 1302083333.33 mm^4

- **Perhitungan Momen**

Akibat Beban Mati

Momen Tumpuan = 1/12 x Qms x s^2
= 1/12 x 6 kN/m x $(1,25\ m)^2$
= 0,781 kNm

Momen Lapangan = 1/24 x Qms x s^2
= 1/24 x 6 kN/m x $(1,25\ m)^2$
= 0,391 kNm

Akibat Beban Mati Tambahan

Momen Tumpuan = 1/12 x Qma x s^2
= 1/12 x 1,54 kN/m x $(1,25\ m)^2$
= 0,201 kNm

Momen Lapangan = 1/24 x Qma x s^2
= 1/24 x 1,54 kN/m x $(1,25\ m)^2$
= 0,1 kNm

Akibat Beban Hidup

Momen Tumpuan = 1/12 x QLL x s^2
= 1/12 x 0,5 kN/m x $(1,25\ m)^2$
= 0,064 kNm

Momen Lapangan = 1/24 x QLL x s^2
= 1/24 x 0,5 kN/m x $(1,25\ m)^2$
= 0,032 kNm

Akibat Truk

Momen Tumpuan = 1/8 x P_{TT} x s^2
= 1/8 x 146,3 kN/m x $(1,25\ m)^2$
= 28,564 kNm

Momen Lapangan = 1/8 x P_{TT} x s^2
= 1/8 x 146,3 kN/m x $(1,25\ m)^2$
= 28,564 kNm

Akibat Beban Angin

Momen Tumpuan = 1/8 x P_{EW} x s^2
= 1/8 x 1,9 kN/m x $(1,25\ m)^2$
= 0,371 kNm

Momen Lapangan = 1/8 x P_{EW} x s^2
= 1/8 x 1,9 kN/m x $(1,25\ m)^2$
= 0,371 kNm

Akibat Pengaruh Temperatur

Momen Tumpuan = $\frac{1}{4}\ x\ \Delta T\ x\ \alpha\ x\ \frac{EI}{h}$

$= \frac{1}{4}\ x\ 25\ x\ 1.10^{-5}\ x\ \frac{25742,96\ \text{x}\ 1302083333.33}{250}$

= 8,38 kNm

Momen Lapangan = $\frac{7}{8}\ x\ \Delta T\ x\ \alpha\ x\ \frac{EI}{h}$

$= \frac{7}{8}\ x\ 25\ x\ 1.10^{-5}\ x\ \frac{25742,96\ \text{x}\ 1302083333.33}{250}$

= 19,33 kNm

Tabel 4. 7 Rekapitulasi Momen pada Tumpuan

No	Jenis Beban	Faktor Beban	Momen (kNm)	Mu (kNm)
1	Beban Mati Sendiri (MS)	1.3	0.781	1.016
2	Beban Mati Tambahan (MA)	2	0.201	0.401
3	Beban Hidup (LL)	2	0.064	0.128
4	Beban Truck(T)	1.8	28.564	51.416
5	Beban Angin (Ew)	1.2	0.371	0.445
6	Pengaruh Temperatur	1.2	8.380	10.056
			Total =	63.461

Tabel 4. 8 Rekapitulasi Momen pada Lapangan

No	Jenis Beban	Faktor Beban	Momen (kNm)	Mu (kNm)
1	Beban Mati Sendiri (MS)	1.3	0.391	0.508
2	Beban Mati Tambahan (MA	2.0	0.100	0.201
3	Beban Hidup (LL)	2.0	0.032	0.064
4	Beban Truck(T)	1.8	28.564	51.416
5	Beban Angin (Ew)	1.2	0.371	0.445
6	Pengaruh Temperatur	1.2	29.330	35.195
			Total =	87.829

- **Penulangan Pelat Lantai**

Tulangan Lapangan

- Data perencanaan :

Momen Rencana = 87,829 kNm
Mutu beton (fc') = 30 Mpa
Mutu baja bondek (fy) = 550 Mpa
Tebal pelat (tp) = 250 mm
yb = 51 mm
Tebal pelat efektif (d) = h-yb
= 250 – 51
= 199 mm
Lebar lantai yang ditinjau= 1000 mm

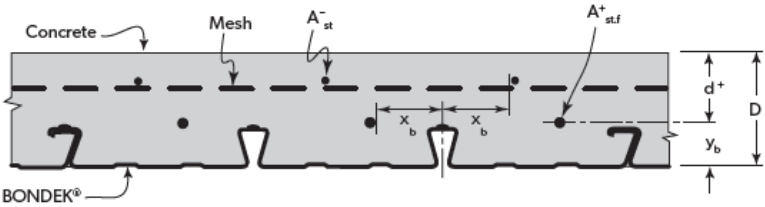

Gambar 4. 10 Detail Bondek

- Penulangan Lentur

m $= \frac{fy}{0{,}85\ x\ fc'}$

$= \frac{550}{0{,}85\ x\ \ 30}$

= 21,57

Mn = Mu/ϕ

= 87,829 kNm/0,8

= 109,786 kNm

= 109786119 Nmm

Rn $= \frac{Mn}{b\ .\ d^2}$

$= \frac{109786119\ \text{Nmm}}{1000\ mm\ x\ \ (199\ mm)^2}$

= 2,772 N/mm^2

ρmin $= \frac{1{,}4}{fy}$

$= \frac{1{,}4}{550}$ = 0,0025

ρb $= \frac{0{,}85\ x\ \ fc'\ x\ \ \beta 1}{fy}\ x\ \ \frac{600}{600+fy}$

$= \frac{0{,}85\ x\ \ 30\ x\ \ 0{,}85}{550}\ x\ \ \frac{600}{600+550}$

= 0,021

ρmax = 0,75 x ρb

= 0,75 x 0,021

= 0,015

ρperlu $= \frac{1}{m}\left(1 - \sqrt{1 - \frac{2\ x\ \ m\ x\ \ Rn}{fy}}\right)$

$= \frac{1}{21{,}57}\left(1 - \sqrt{1 - \frac{2\ x\ 21{,}57\ x\ 2{,}772}{550}}\right)$

= 0,0053

Kontrol, ρmin < ρperlu < ρmax

0,0025 < 0,0053 < 0,015 , maka digunakan ρperlu = 0,0053

As = ρ x b x d
= 0,0053 x 1000 mm x 199 mm
= 1064,477 mm^2

Direncanakan menggunakan bondek dari LYSAGHT dengan ketebalan = 0,9 mm

Ash bondek = 1503 mm^2

As perlu < As pakai
1064,477 mm^2 < 1503 mm^2 **(OK)**

- Kontrol kemampuan penampang

a $= \frac{As\ x\ fy}{0{,}85\ x\ fc'x\ b}$

$= \frac{1503\ x\ 550}{0{,}85\ x\ 30\ x\ 1000}$

= 32,417 mm

Mn aktual = ϕ x As x fy x $\left(d - \frac{a}{2}\right)$

= 0,8 x 1503 x 550 x (199 - $\frac{32.417}{2}$)

= 120883460.8 Nmm

= 120,883 kNm

Cek syarat , Mu < Mn Aktual

87,829 kNm < 120,883 kNm **(OK)**

Tulangan Tumpuan

- Data perencanaan :

Momen Rencana	= 63,461 kNm
Mutu beton (fc')	= 30 Mpa
Mutu baja tulangan (fy)	= 290 Mpa
Tebal pelat (tp)	= 250 mm
Tebal decking (d')	= 40 mm
Diameter tulangan rencana(D)	= 16 mm
Tebal pelat efektif (d)	= h-d'-0,5D
	= 250 – 40 – 0,5 .16
	= 202 mm

Lebar lantai yang ditinjau= 1000 mm

- Penulangan Lentur

m $= \frac{fy}{0{,}85\ x\ fc'}$

$= \frac{290}{0{,}85\ x\ 30}$

= 11,37

Mn = Mu/ϕ

= 63,461 kNm/0,8

= 793,268 kNm

= 79326776.18 Nmm

Rn $= \frac{Mn}{b\ x\ d^2}$

$= \frac{79326776.18\ \text{Nmm}}{1000\ mm\ x\ (202\ mm)^2}$

= 1,944 N/mm^2

ρmin $= \frac{1{,}4}{fy}$

$= \frac{1{,}4}{290}$ = 0,0048

ρb $= \frac{0{,}85\ x\ fc'\ x\ \beta 1}{fy}\ x\ \frac{600}{600+fy}$

$= \frac{0{,}85\ x\ 30\ x\ 0{,}85}{290}\ x\ \frac{600}{600+290}$

= 0,05

ρmax = 0,75 x ρb

= 0,75 x 0,05

= 0,037

ρperlu $= \frac{1}{m}\left(1 - \sqrt{1 - \frac{2\ x\ m\ x\ Rn}{fy}}\right)$

$= \frac{1}{11{,}37}\left(1 - \sqrt{1 - \frac{2\ x\ 11{,}37\ x\ 1{,}944}{290}}\right)$

= 0,007

Kontrol, ρmin < ρperlu < ρmax

0,0048 < 0,007 < 0,037 , maka digunakan ρperlu = 0,007

As = ρ x b xd
= 0,007 x 1000 mm x 202 mm
= 1410.137 mm^2

Direncanakan menggunakan tulangan D16-120

As pakai $= \frac{1}{4}\ x\ \pi\ x\ \frac{D^2\ x\ b}{s}$

$= \frac{1}{4}\ x\ \pi\ x\ \frac{16^2\ x\ 1000}{120}$

= 1675.516 mm^2

Cek, As perlu < As pakai

1410.137 mm^2 < 1675.516 mm^2 **(OK)**

- Kontrol kemampuan penampang

a $= \frac{As\ x\ fy}{0{,}85\ x\ fc'x\ b}$

$= \frac{1675.516\ \ x\ 290}{0{,}85\ x\ 30\ x\ 1000}$

= 19,055 mm

Mn aktual = ϕ x As fy $\left(d - \frac{a}{2}\right)$

= 0,8 x 1675,516 x 290 x (202 - $\frac{19{,}055}{2}$)

= 74817880.04 Nmm

= 74,818 kNm

Cek syarat , Mu < Mn Aktual

63,461 kNm < 74,818 kNm **(OK)**

- Penulangan bagi

As'perlu = 50% x As pakai
= 50% x 1675.516 mm^2
= 837,758 mm^2

Direncanakan tulangan bagi D13-150 .

As' pakai $= \frac{1}{4}\ x\ \pi\ x\ \frac{D^2\ x\ b}{s}$

$= \frac{1}{4}\ x\ \pi\ x \frac{13^2\ x\ 1000}{150}$

= 884,882 mm^2

Cek, As' perlu < As' pakai

837,758 mm^2 < 884,882 mm^2 **(OK)**

- **Cek Geser Pons**

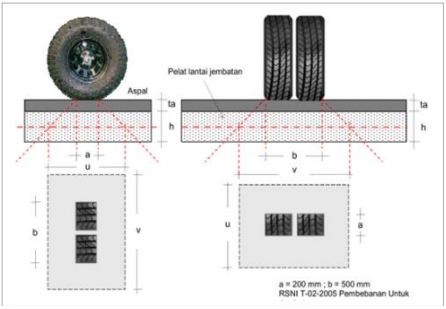

Gambar 4. 11 Distribusi Geser Pons

Data teknis :

Tebal Aspal (ta)	= 70 mm
Tebal pelat (ts)	= 250 mm
Lebar roda (a)	= 200 mm
Panjang roda (b)	= 500 mm
Mutu beton (fc')	= 30 Mpa
Beban Truk (P_{TT})	= 146,25 kN
Faktor reduksi (∅)	= 0,7

Vu beban roda = 2 x P_{TT}
= 2 x 146,25 kN
= 292, 5 kN

Bidang geser pons

u = a + 2ta + ts
= 200 + 2x70 + 250
= 590 mm

v = b + 2ta + ts
= 500 + 2 x 70 + 250
= 890 mm

Luas bidang geser

A pons = (2 x u + 2 x v) x ts
= (2 x 590 + 2 x 890) x 250
= 740000 mm^2

Kekuatan nominal lantai terhadap geser tanpa tulangan geser

Vc $= \frac{1}{6}\ x\ \sqrt{fc'}\ x\ Apons$

$= \frac{1}{6}\ x\ \sqrt{30}\ x\ 740000$

= 675,52 kN

Kekuatan geser terfaktor

∅Vc = 0,7 x 675,52

= 472,87 kN

Cek syarat, Vu beban roda < ∅Vc

292, 5 kN < 472,87 kN **(OK)**

BAB V
STRUKTUR UTAMA

Pada bab ini akan direncanakan gelagar memanjang dan gelagar melintang. Gelagar memanjang dan melintang di desain dan dihitung dengan mengacu pada RSNI T-03-2005 dan untuk pembebanan dan *load factor* mengikuti SNI 1725:2016.

5.1. Gelagar Memanjang

Dari hasil preliminary desain didapat data perencanaan profil untuk gelagar memanjang WF 400.200.8.13 (Gunawan, 1993)

d	= 400 mm	tw	= 8 mm
bf	= 200 mm	tf	= 13 mm
A	= 83,37 cm^2	w	= 66 kg/m
Ix	= 23700 cm^4	ix	= 16,8 cm
Iy	= 1740 cm^4	iy	= 4,54 cm
Sx	= 1170 cm^3	Zx	= 1285 cm^3
Sy	= 174 cm^3	Zy	= 265,98 cm^3
Es	= 200000 Mpa		

Sifat mekanis baja structural

BJ	= 50
fu	= 500 Mpa
fy	= 290 Mpa

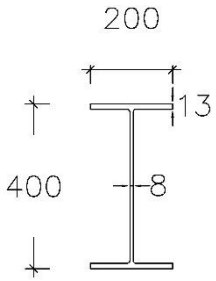

Gambar 5. 1 Detail Gelagar Memanjang (mm)

5.1.1. Pembebanan

Data awal :

Panjang gelagar (λ) = 4 m
Jarak antar gelagar (s) = 1,25 m
Tebal pelat beton (ts) = 250 mm
Tebal aspal (ta) = 70 mm
γ Beton = 2500 kg/m^3
γ Aspal = 2200 kg/m^3
Berat *Steeldeck* = 12,48 kg/m^2 (LYSAGHT Bondek)

Beban Mati

Aspal = s x ta x γ Aspal
= 1,25 m x 0,07 m x 2200 kg/m^3
= 192,5 kg/m
Pelat beton = s x ts x γ Beton
= 1,25 m x 0,25 x 2500 kg/m^3
= 781,25 kg/m
Steeldeck = s x berat *steeldeck*
= 1,25 m x 12,48 kg/m^2
= 15,6 kg/m
Berat profil = 66 kg/m

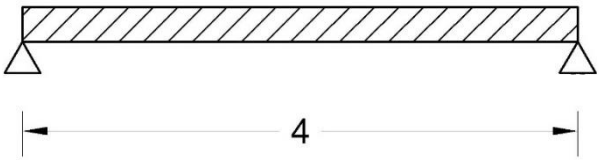

Gambar 5. 2 Model Perhitungan Beban Mati

Beban Hidup

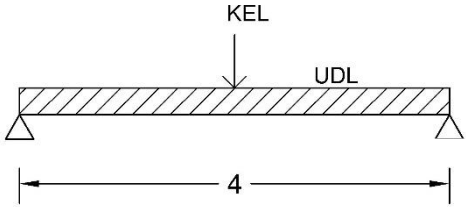

Gambar 5. 3 Model Perhitungan Beban Hidup

- BTR

BTR untuk L > 30 mm

q = 9 x (0,5 + 15/L) kPa
= 9 x (0,5 + 15/120) kPa
= 5,625 kPa
= 562,5 kg/m^2

qBTR = q x s
= 562,5 kg/m^2 x 1,25 m
= 703,125 kg/m

- BGT

DLA = 30% untuk L > 90 m

P_{BGT} = 4900 kg/m

P = P_{BGT} x (1+DLA) x s
= 4900 kg/m x (1+0,3) x 1,25 m
= 7962,5 kg

- Truk

Faktor beban dinamis, DLA = 30%

Beban truk T = 112,5 kN

P_{TT} = T x (1+DLA)
= 112,5 kN x (1+0,3)
= 146,25 kN
= 14625 kg

Tabel 5. 1 Rekapitulasi Beban

Jenis Beban	Nilai	Faktor	Jumlah	satuan
Beban Mati				
Beban pelat	781.25	1.3	1015.625	kg/m
Beban Aspal	192.5	1.3	250.25	kg/m
Steeldeck	15.6	1.4	21.84	kg/m
Profil	66	1.1	72.6	kg/m
		Total =	1360.315	kg/m
Beban Hidup				
BTR	703.125	1.8	1265.625	kg/m
BGT	7962.5	1.8	14332.5	kg
Truk	14625	1.8	26325	kg

5.1.2. Perhitungan Momen

Akibat beban mati

Q_{total} = 1360,315 kg/m

M_{DL} = 1/8 x Q_{total} x λ^2

= 1/8 x 1360,315 kg/m x (4 m)^2

= 2720,63 kgm

Akibat beban hidup

- BTR dan BGT

M_L $= \frac{1}{8} x Q_{BTR} x \lambda^2 + \frac{1}{4} x P_{BGT} x \lambda$

$= \frac{1}{8} x 1265{,}625 x 4^2 + \frac{1}{4} x 14332{,}5 x 4$

= 16863,75 kgm

- Akibat Truk

M_T $= \frac{1}{4} x P_{Truk} x \lambda$

$= \frac{1}{4} x 26325 x 4$

= 26325 kgm

Karena M_L<M_T, maka dipakai momen akibat beban truk yaitu sebesar M_T= 26325 kgm

Momen Total = M_{DL}+ M_T
Momen Total = 2720,63 kgm + 26325 kgm
= 29045,63 kgm

5.1.3. Kontrol Kekuatan Gelagar Sebelum Komposit

Tekuk lokal

- Sayap

$$\lambda = \frac{bf}{2tf} = \frac{200}{26} = 7{,}69$$

$$\lambda p = \frac{170}{\sqrt{fy}} = \frac{170}{\sqrt{290}} = 9{,}98$$ fr = 70 Mpa

$$\lambda r = \frac{370}{\sqrt{fy-fr}} = \frac{370}{\sqrt{290-70}} = 24{,}95$$

Karena λ<λp<λr , maka termasuk Penampang Kompak

- Badan

$$\lambda = \frac{h}{tw} = \frac{374}{8} = 46{,}75$$

$$\lambda p = \frac{1680}{\sqrt{fy}} = \frac{1680}{\sqrt{290}} = 98{,}65$$

$$\lambda r = \frac{2550}{\sqrt{fy}} = \frac{2550}{\sqrt{290}} = 149{,}74$$

Karena λ<λp<λr , maka termasuk Penampang Kompak sehingga kuat lentur nominal penampang adalah Mn = Mp = Z_xF_y

Mp= Mn = Z_x x fy
= 1285000 mm^3 x 290 Mpa
= 372650000 Nmm
= 37265 kgm

φMn = 0,9 x Mn
= 0,9 x 37265 kgm
= 33538.5 kgm

Cek syarat , Mu < φMn
29045,63 kgm < 33538.5 kgm **(OK)**

Tekuk Lateral

L = 400 cm

ry = $\sqrt{\frac{Iy}{A}} = \sqrt{\frac{1740\ cm4}{83{,}37\ cm2}}$ = 4,57

Lp = 1,76 x ry x $\sqrt{\frac{E}{fy}}$ (SNI 1729-2015, F1, 1)

= 1,76 x 4,57 x $\sqrt{\frac{200000}{290}}$

= 211,15 cm

Lr = $ry\left[\frac{X_1}{fy-fr}\right]\sqrt{1+\sqrt{1+X_2(fy-fr)^2}}$

fy = 2900 kg/cm^2

fr = 700 kg/cm^2

X_1 = $\frac{\pi}{S}\sqrt{\frac{EGJA}{2}}$ E = 2000000 kg/cm^2

G = 800000 kg/cm^2

J = $\sum\frac{1}{3}bt^3 = \frac{1}{3}37{,}4x1{,}3^3 + \frac{1}{3}20x0{,}8^3$

= 30,8 cm^4

X_1 = $\frac{\pi}{1170}\sqrt{\frac{2.10^6x8.10^5x30{,}8x83{,}37}{2}} = 121704{,}77$ kg/cm^2

Iw = $\frac{Iy\,.\,h\prime^2}{4} = \frac{1740\,.\,387^2}{4} = 651495\ cm^6$

X_2 = $4\left(\frac{S}{GJ}\right)^2\frac{Iw}{Iy} = 4\left(\frac{1170}{2.10^6x30{,}8}\right)^2\frac{651495}{1740} = 3{,}37x10^{-6}$

Lr = $ry\left[\frac{X_1}{fy-fr}\right]\sqrt{1+\sqrt{1+X_2(fy-fr)^2}}$

= $4{,}57\left[\frac{121704{,}77}{2900-700}\right]\sqrt{1+\sqrt{1+3{,}37x10^{-6}(2900-700)^2}}$

= 574.3272871 cm

Karena Lp<L<Lr , maka termasuk bentang menengah sehingga momen kapasitas penampang menggunakan persamaan sebagai berikut :

Mn = $C_b\left[Mr+(Mp-Mr)\frac{Lr-L}{Lr-Lp}\right]$

Cb = $\frac{12{,}5M_{maks}}{2{,}5M_{maks}+3M_A+4M_B+3M_C} \leq 2{,}27$ (SNI 1729-2015, F1-1)

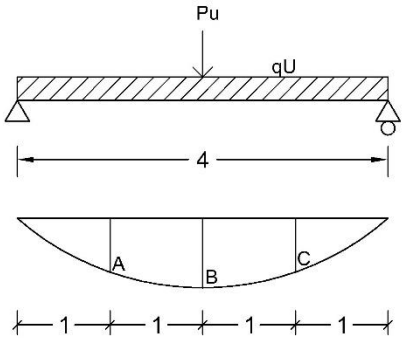

Gambar 5. 4 Titik Momen Pada Gelagar

qu = 1,2DL+1,6qL
= 1,2 x1360.315 kg/m+ 1,6x 1265,625 lg/m
= 3657.38 kg/m

Pu = 1,6Pkel
= 1,6 x 14332.5 kg
= 22932 kg

V_{A-C} = 0,5 x quxL+0,5Pu
= 0,5 x 3657.38 kg/m x 4 m + 0,5 x 22932 kg
= 18780.756 kg

M_{A-C} = (Va x 1 m)-(0,5 x qu x $(1\ m)^2$)
= 18780.756 kg x 1m – (0,5 x 3657.38 kg/m x $(1\ m)^2$)
= 16952.067 kgm

M_B = (Va x 2 m)-(0,5 x qu x $(2\ m)^2$)
= 18780.756 kg x 2m – (0,5 x 3657.38 kg/m x $(2\ m)^2$)
= 30246.756 kgm

Cb $= \frac{12{,}5M_{maks}}{2{,}5M_{maks}+3M_A+4M_B+3M_C} \leq 2{,}27$

$= \frac{12{,}5\ x\ 30246.756}{2{,}5\ x\ 30246.756\ +3\ x\ 16952.067+4\ x\ 30246.756+3\ x\ 16952.067}$

= 1,267 ≤ 2,27 **(OK)**

Mp = Zx . fy
= 1285 cm^3 x 2900 kg/cm^2
= 3726500 kgcm

Mr = Sx (fy-fr)

= 1170 cm^3 x (2900 – 700)kg/cm^2

= 2574000 kgcm

Mn $= C_b \left[Mr + (Mp - Mr)\frac{Lr-L}{Lr-Lp}\right]$

$=1{,}267 \left[2574000 + (3726500 - 2574000)\frac{574.327-400}{574.327-211{,}15}\right]$

= 3963411.6 kgcm

= 39634.116 kgm

Cek syarat , Mu < φMn

29045.63 kgm < 0,9 x 39634.116 kgm

29045.63 kgm < 35670.7049 kgm **(OK)**

5.1.4. Kontrol Lendutan

Menurut RSNI T-03-2005 ps 4.7.2 menyatakan lendutan maksimum gelagar diatas dua tumpuan adalah L/800.

δijin = 400/800 = 0,5 cm

- Lendutan akibat beban hidup BTR dan BGT

δ(udl+kel) $= \frac{5}{384} x \frac{qL\,.\,\lambda^4}{EIx} + \frac{1}{48} x \frac{P1\,.\,\lambda^4}{EIx}$

$= \frac{5}{384} x \frac{7.031\,.\,400^4}{2000000\,x\,23700} + \frac{1}{48} x \frac{7962.5\,.\,400^4}{2000000\,x\,23700}$

= 0,273 cm

- Lendutan akibat beban truk

δtruk $= \frac{1}{48} x \frac{Ptruk\,.\,\lambda^4}{EIx}$

$= \frac{1}{48} x \frac{14625\,.\,400^4}{2000000\,x\,23700}$

= 0,411 cm

Dipakai beban lendutan yang paling besar yaitu akibat beban truk = 0,411 cm

Cek syarat, δtruk < δijin

0,411 cm < 0,5 cm **(OK)**

5.1.5. Kontrol Geser

Gaya geser maksismum terjadi apabila berada dekat dengan perletakan.

- Untuk beban mati

Va max = 0,5 x Qd x λ
= 0,5 x 1360.315 kg/m x 4 m
= 2720.63 kg

- Untuk beban hidup$_{(BTR+BGT)}$

Va max = (0,5 x QL x λ) + (P_{BGT})
= (0,5 x 1265.625 kg/m x 4 m) + (14332.5 kg)
= 16863.75 kg

- Untuk beban truk

T = 112,5 kN
Tu = T(1+DLA)
= 112,5 kN (1+0,3)
= 146,25 kN = 14625 kg
Va max = Tu x LF
= 14625 kg x 1,8
= 26325 kg

Jadi Va yang digunakan adalah Va yang terbesar yaitu Va akibat beban truk sebesar 26325 kg. Maka kuat geser sebagai berikut (RSNI T-03-2005 ps.7.8):

Luas penampang badan

$$\frac{h}{tw} = \frac{374}{8} = 46{,}75$$

$$Kn = 5 + \frac{5}{(\frac{a}{h})^2} = 5 + \frac{5}{(\frac{200}{374})^2} = 22.48$$

$$\frac{h}{tw} \leq 1{,}1\sqrt{\frac{Kn\ x\ E}{fy}}$$

$$46{,}75 \leq 1{,}1\sqrt{\frac{22{,}48\ x\ 200000}{290}}$$

46,75 < 136,97 , maka kuat geser :

Vu < ϕVn
26325 kg < 0,9 x 0,6 x fy x Aw
26325 kg < 0,9 x 0,6 x 290 x (400 x 8)
26325 kg < 50112 kg **(OK)**

5.1.6. Kontrol Kekuatan Sesudah Komposit

Menurut SNI T-03-2005 ps 8.2.1 lebar efektif pelat beton diambil nilai terkecil dari :

- 1/5 bentang gelagar
- jarak antar gelagar

Dimana :

Panjang gelagar (L) = 4000 mm

Jarak antar gelagar (s) = 1250 mm

b_{eff} < 1/5 L = 4000/5 = 800 mm

b_{eff} < s = 1250 mm

diambil yang terkecil , b_{eff} = 800 mm

- kontrol kriteria penampang

$$\frac{h}{tw} \leq \frac{1680}{\sqrt{fy}}$$

$$\frac{374}{8} \leq \frac{1680}{\sqrt{290}}$$

46,75 ≤ 98,65 maka termasuk penampang kompak

- Menentukan garis netral

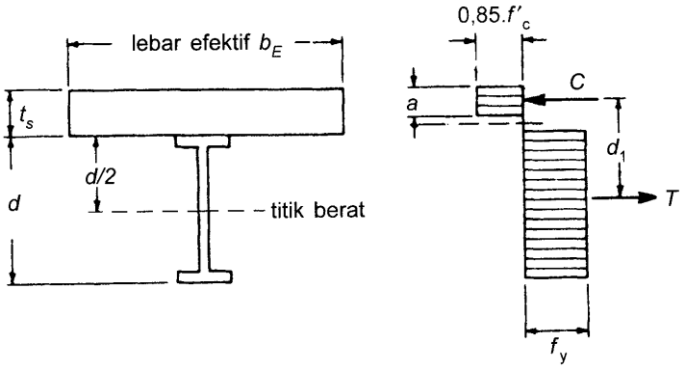

Gambar 5. 5 Distribusi Tegangan Plastis

C = 0,85 x fc' x a x b_{eff} (Setiawan, 2008)

T = As x fy

= 8337 mm^2 x 290 N/mm^2

= 2417730 N

C = T

0,85 x fc' x a x b_{eff} = As x fy

a $= \frac{As\ x\ fy}{0{,}85\ x\ fc'x\ b_{eff}}$

$= \frac{8337\ mm^2\ x\ 290\ N/mm^2}{0{,}85\ x\ 30\ N/mm^2 x\ 800\ mm}$ = 118,52 mm

Karena a < ts maka sumbu netral berada pada pelat beton

- Kapasitas momen

d_1 $= \left(\frac{d}{2} + ts - \frac{a}{2}\right)$

$= \left(\frac{400\ mm}{2} + 250\ mm - \frac{118{,}52\ mm}{2}\right)$ = 390,74 mm

Mn = T x d_1

Mn = 2417730 N x 390,74 mm

= 944708442.3 Nmm = 94470.844 kgm

φMn = 0,9 x 94470.844 kgm

= 85023.76 kgm

Cek syarat Mu < φMn

29045.63 kgm < 85023.76 kgm **(OK)**

Maka penampang telah memenuhi kekuatan lentur yang terjadi sesudah komposit.

Menghitung momen insersia penampang

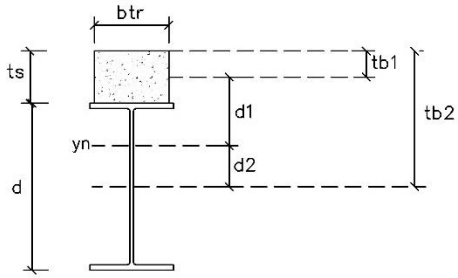

Gambar 5. 6 Gelagar Komposit

Menentukan nilai n

Es = 200000 Mpa

Ec = 25742.96 Mpa

$$n = \frac{Es}{Ec} = \frac{200000}{25742.96} = 7{,}769$$

konversi terhadap baja

$$btr = \frac{b_{eff}}{n} = \frac{800}{7{,}769} = 10{,}3\ cm$$

Luas total (Atr) = btr x ts
= 10,3 cm x 25 cm
= 257.43 cm^2

tb1 = ½ x ts
= ½ x 250 mm = 125 mm

tb2 = ts + ½ x d
= 250 + ½ x 400 = 450 mm

Mencari garis netral

Tabel 5. 2 Garis Netral Penampang Komposit

Material	An (mm)	Jarak serat atas ke titik berat benda (tb1,tb2)(mm)	AnxYn (mm)
Beton	25742.96	125	3217870
Baja	8337	450	3751650
Jumlah	34079.96	-	6969520

$$Yn = \frac{\sum AnxYn}{\sum An}$$

$$= \frac{6969520.025}{34079.96} = 204{,}5 \text{ mm}$$

d1 = Yn – ½ ts
= 204,5 – ½ x 250 = 79,5 mm

d2 = tb2 – Yn
= 450 – 204,5 = 245,5 mm

Momen inersia penampang

Tabel 5. 3 Momen Inersia Penampang

Material	An	d	Io	Io+A.d^2
Beton	25742.96	79.50493	1041666667	1204388809
Baja	8337	245.4951	23700000	526152875.7
			I total=	1730541684

Inersia penampang = 1730541684 mm^4

5.1.7. Perhitungan *Shear Connector*

Untuk jarak perhitungan *shear connector* (RSNI T-03-2005 ps.8.6.3) tidak boleh melebihi nilai sebagai berikut :

- 600 mm
- 2 kali tebal lantai
- 4 kali tinggi penghubung

Untuk diameter shear connector tidak boleh melebihi :

- 1,5 kali tebal pelat sayap bila pelat sayap memikul tegangan tarik.
- 2,0 kali tebal pelat sayap bila tidak terdapat tegangan tarik.

Digunakan shear connector jenis paku/stud (Arcfix stud welding) dengan data sebagai berikut :

Diameter = 19 mm
Tinggi = 150 mm
Asc = 283,5 mm^2
fc' = 30 Mpa
Ec = 25743 Mpa
Fu = 410 Mpa

Kapasitas nominal 1 stud

Vsu = 0,5 x Asc $\sqrt{fc' \; x \; Ec}$ (Setiawan, 2008)
= 0,5 x 283,5 x $\sqrt{30 \; x \; 25743}$
= 124582.476 N

Vls = 0,55 x n x Vsu
= 0,55 x 1 x 124582.476
= 68520.362 N

Gaya geser yang bekerja

V = 263250 N

Gaya geser persatuan Panjang

$$V_L = \frac{V \; x \; At \; x \; Yc}{I}$$

$$= \frac{263250 \; N \; x \; 257{,}42 \; x \; 7{,}95}{173054{,}17}$$

= 3113,43 N

Cek syarat , $V_L < \varnothing Vls$

3113,43 N < 0,75 x 68520.362 N
3113,43 N < 51390.27 N **(OK)**

Jumlah *shear connector*

Vh = As x fy

= 8337 mm^2 x 290 N/mm^2

= 2417730 N

N = Vh/Vsu

= 2417730 N / 124582.476 N

= 20 buah

Jadi jumlah *shear connector* yang dibutuhkan sepanjang gelagar memanjang adalah n = 20 buah.

Jarak antar konektor yang digunakan

S = 4000/20 = 200 mm

Jumlah stud yang digunakan sebanyak 20 buah dengan 1 stud pergelombang steeldeck dengan jarak 200 mm.

5.1.8. Pehitungan Sambungan Gelagar Memanjang

Sambungan siku pada balok memanjang

Gaya geser vu = 263,25 kN

Rencana :

D baut = 2 cm

D lubang = 2,2 cm

Tb baut = 145 kN

Pelat sambung (tp) = 10 mm

Baut mutu tinggi

Koef gesek (μ) = 0,35

Jumlah bidang geser(m) = 2

φ = 0,9

Kh = 1

Vn = μ x m x Tb x kh

= 0,35 x 2 x 145 x 1

= 101,5 kN

Vd = φ x Vn

= 0,9 x 101,5 = 91,35 kN

n = Vu/Vd

= 263,25 kN / 91,35 kN

= 2,9 ≈ 4 buah

Syarat jarak baut (RSNI T-03-2005)

Jarak ke tepi (S1) = 1,5 db s/d (4tp+100) atau 200 mm

1,5 db = 1,5 x 20 mm = 30 mm

4tp+100 = 4 x 10 + 100 = 140 mm

S1 digunakan = 50 mm

Jaarak antar baut = 2,5 db s/d 15 tp atau 200 mm

2,5 db = 2,5 x 20 mm = 50 mm

15 tp = 15 x 10 = 150 mm

S digunakan = 60 mm

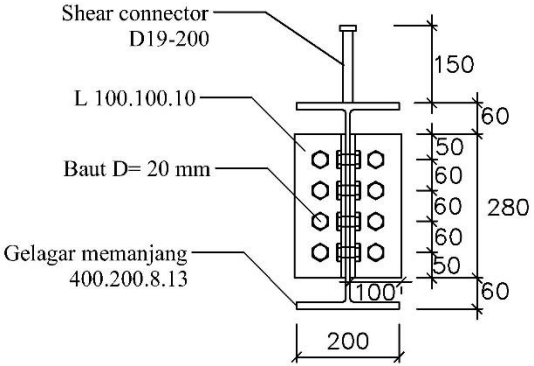

Gambar 5. 7 Detail Sambungan Gelagar Memanjang

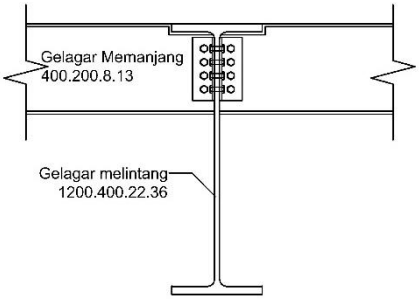

Gambar 5. 8 Detail Sambungan Gelagar Memanjang ke Melintang

5.2. Gelagar Melintang

Dari hasil preliminary desain didapat data perencanaan profil untuk gelagar melintang WF 1200.400.22.36

d	= 1200 mm	tw	= 22 mm
bf	= 400 mm	tf	= 36 mm
A	= 543,9 cm2	w	= 427 kg/m
Ix	= 1260000 cm4	ix	= 48.2 cm
Iy	= 38500 cm4	iy	= 8.4 cm
Sx	= 21000 cm3	Zx	= 24200 cm3
Sy	= 1930 cm3	Zy	= 3030 cm3
Es	= 200000 Mpa	h	= 1128 mm

Sifat mekanis baja structural

BJ	= 55
Fy	= 410 Mpa
Fu	= 550 Mpa

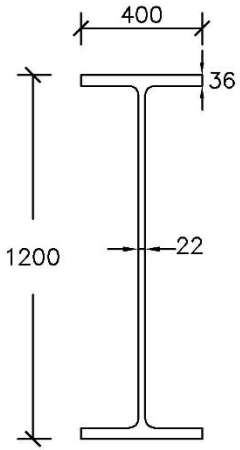

Gambar 5. 9 Detail Gelagar Melintang

5.2.1. Pembebanan

- **Data awal :**

Panjang gelagar (λ) = 10 m
Jarak antar gelagar (s) = 4 m
Tebal pelat beton (ts) = 250 mm
Tebal aspal (ta) = 70 mm
γ Beton = 2500 kg/m^3
γ Aspal = 2200 kg/m^3
Berat *Steeldeck* = 12,48 kg/m^2 (LYSAGHT Bondek)

- **Beban Mati**

Sebelum Komposit

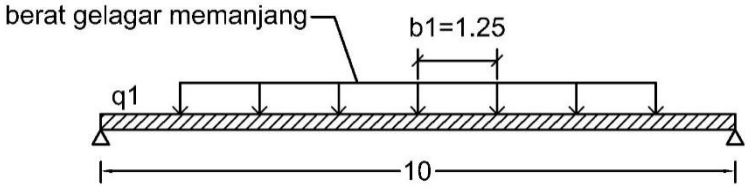

Gambar 5. 10 Beban Mati Sebelum Komposit

Pelat beton = s x ts x γ Beton
= 4 m x 0,25 x 2500 kg/m^3
= 2500 kg/m
Gelagar memanjang = W x λ /b1
= 66 kg/m x 4 m/1,25 m
= 211,2 kg/m
Steeldeck = s x berat *steeldeck*
= 4 m x 12,48 kg/m^2
= 49,92 kg/m
Berat profil = 427 kg/m

Setelah Komposit

Aspal = s x ta x γ Aspal
= 4 m x 0,07 m x 2200 kg/m^3
= 616 kg/m

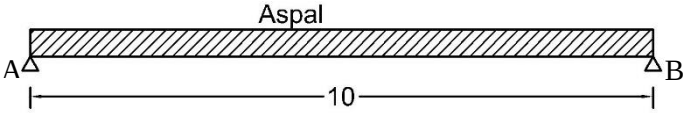

Gambar 5. 11 Beban Setelah Komposit

Beban Hidup

- BTR

BTR untuk L > 30 mm

q = 9 x (0,5 + 15/L) kPa
= 9 x (0,5 + 15/120) kPa
= 5,625 kPa
= 562,5 kg/m^2

qBTR = q x s
= 562,5 kg/m^2 x 4 m
= 2250 kg/m

- BGT

DLA = 30% untuk L > 90 m

P_{BGT} = 4900 kg/m

P = P_{BGT} x (1+DLA)
= 4900 kg/m x (1+0,3)
= 6370 kg/m

- Truk

Faktor beban dinamis, DLA = 30%

Beban truk T = 112,5 kN

P_{TT} = T x (1+DLA)
= 112,5 kN x (1+0,3)
= 146,25 kN
= 14625 kg

Tabel 5. 4 Rekapitulasi Beban

Jenis Beban	Nilai	Faktor	Total	satuan
Beban Mati(sebelum komposi				
Beban pelat	2500	1.3	3250	kg/m
Profil	427	1.1	469.7	kg/m
Gelagar memanjang	211.2	1.1	232.32	kg/m
Steeldeck	49.92	1.4	69.888	kg/m
Jumlah			4021.908	kg/m
Beban Mati(setelah komposit)				
Beban Aspal	616	1.3	800.8	kg/m
Beban Hidup				
BTR	2250	1.8	4050	kg/m
BGT	6370	1.8	11466	kg/m
Truk	14625	1.8	26325	kg

5.2.2. Perhitungan Momen

- **Beban Mati**

Sebelum Komposit

$Q1_{total}$ = 4021.908kg/m

M_{DL1} = 1/8 x Q_{DL1} x λ^2

= 1/8 x 4021.908kg/m x $(10\ m)^2$

= 50273.85 kgm

V_{DL1} = ½ x Q_{DL1}x λ

= ½ x 4021.908kg/m x 10 m

= 20109.54 kg

Setelah Komposit

$\sum M_B$ = 0

V_A x λ = q_{DL2} x λ x ½ λ

V_A x 10 m = 800.8 kg/m x 10 m x 5 m

V_A = 4004 kg

M_{DL2} = Va x ½ λ - q_{DL2} x ½ λ x ¼ λ

= 4004 x 5 m – 800.8 kg/m x 5 m x 2.5 m

= 10010 kgm

- **Beban Hidup**

- BTR dan BGT

Gambar 5. 12 Pembebanan akibat BTR dan BGT

Beban "D" = Beban BTR + Beban BGT
= 4050 kg/m + 11466 kg/m
= 15516 kg/m
q1 = 100% x D
= 100% x 15516 kg/m = 15516 kg/m
q2 = 50% x D
= 50% x 15516 kg/m = 7758 kg/m

Va = Vb
= 0,5 x (q1 x 7 + 2 x q2 x 1,5)
= 0,5 x (15516 kg/m x 7m + 2 x 7758 kg/m x 1.5 m)
= 65943 kg

M_{LL} = (Va x 5 m) – (q2 x 1,5 m x 4,25 m) – (q1 x 3,5 m x 1,75 m)
= (65943 x 5) – (7758 x 1,5 x 4,25) – (15516 x 3,5 x 1,75)
= 185222.25 kgm

- Beban Truk "T"

Kondisi 1

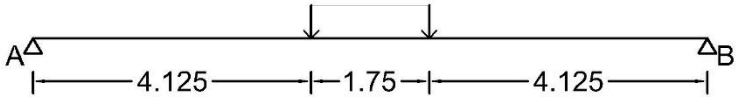

Gambar 5. 13 Pembebanan Truk Kondisi 1

$\sum M_B$ = 0
V_A x 10 m = T (5,875 m + 4,125 m)
V_A x 10 m = 26325 kg (5,875 m + 4,125 m)
V_A x 10 m = 263250 kgm
V_A = 26325 kg

M_{T1} = (Va x 5 m) – (T x 0,875 m)
= (26325 kg x 5 m) – (26325 kg x 0,875 m)
= 108590.625 kgm

Kondisi 2

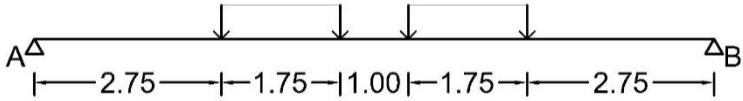

Gambar 5. 14 Pembebanan Truk Kondisi 2

$\sum M_B$ = 0
V_A x 10 m = T (7,25 m + 5,5 m + 4.5 m + 2,75 m)
V_A x 10 m = 26325 kg (7,25 m + 5,5 m + 4.5 m + 2,75 m)
V_A x 10 m = 526500 k gm
V_A = 52650 kg

M_{T2} = (Va x 5 m) – T (2,25 m + 0,5 m)
= (52650 kg x 5 m) – 26325 kg (2,25 m + 0,5 m)
= 190856.25 kgm (Menentukan)

Mtotal = M_{DL} + M_{LL} + M_T
= 50273.85 kgm + 185222.25 kgm + 190856.25 kgm
= 426352.35 kgm

5.2.3. Kontrol Kekuatan Sebelum Komposit

- **Tekuk lokal**

- Sayap

$$\lambda = \frac{bf}{2tf} = \frac{400}{72} = 5{,}55$$

$$\lambda p = \frac{170}{\sqrt{fy}} = \frac{170}{\sqrt{410}} = 8{,}39$$ fr = 70 Mpa

$$\lambda r = \frac{370}{\sqrt{fy-fr}} = \frac{370}{\sqrt{410-70}} = 20{,}06$$

Karena λ<λp<λr , maka termasuk Penampang Kompak

- Badan

$$\lambda = \frac{h}{tw} = \frac{1127}{22} = 51{,}27$$

$$\lambda p = \frac{1680}{\sqrt{fy}} = \frac{1680}{\sqrt{410}} = 82{,}97$$

$$\lambda r = \frac{2550}{\sqrt{fy}} = \frac{2550}{\sqrt{410}} = 125{,}94$$

Karena λ<λp<λr , maka termasuk Penampang Kompak sehingga kuat lentur nominal penampang adalah Mn = Mp = Z_xF_y

Mp= Mn = Z_x x fy
= 24200000 mm^3 x 410 Mpa
= 9922000000 Nmm
= 992200 kgm

φMn = 0,9 x Mn
= 0,9 x 992200 kgm
= 892980 kgm

Cek syarat , Mu < φMn

426352.35 kgm < 892980 kgm **(OK)**

- **Tekuk Lateral**

L_B = 125 cm

ry = $\sqrt{\frac{Iy}{A}} = \sqrt{\frac{38500\ cm4}{543.9\ cm2}}$ = 8,41

Lp = 1,76 x ry x $\sqrt{\frac{E}{fy}}$ (SNI 1729-2015, F1, 1)

= 1,76 x 8,41 x $\sqrt{\frac{200000}{410}}$

= 327.04 cm

Karena L_B < Lp maka termasuk bentang pendek sehingga kuat lentur nominal penampang adalah Mn = Mp = Z_xF_y

Mp= Mn = Z_x x fy
= 24200000 mm^3 x 410 Mpa
= 9922000000 Nmm
= 992200 kgm

φMn = 0,9 x Mn
= 0,9 x 992200 kgm
= 892980 kgm

Cek syarat , Mu < φMn

426352.35 kgm < 892980 kgm **(OK)**

5.2.4. Kontrol Lendutan

Menurut RSNI T-03-2005 ps 4.7.2 menyatakan lendutan maksimum gelagar diatas dua tumpuan adalah L/800.

δijin = 1000/800 = 1,25 cm

- Lendutan akibat beban hidup BTR dan BGT

δ(udl+kel) $= \frac{5}{384} x \frac{qL\,.\,\lambda^4}{EIx} +$

$= \frac{5}{384} x \frac{155.16\,.\,1000^4}{2000000\ x\ 1260000}$

= 0.802 cm

- Lendutan akibat beban truk

δtruk $= \frac{1}{48} x \frac{Ptruk\,.\,\lambda^4}{EIx}$

$= \frac{1}{48} x \frac{14625\,.\,1000^4}{2000000\ x\ 1260000}$

= 0,121 cm

Dipakai beban lendutan yang paling besar yaitu akibat beban hidup = 0,802 cm

Cek syarat, δhidup < δijin

0,802 cm < 1,25 cm **(OK)**

5.2.5. Kontrol Geser

- Akibat beban mati

V_{DL1} = 20109.54 kg

V_{DL2} = 4004 kg

V_{DL} = V_{DL1} + V_{DL2}

= 20109.54 kg + 4004 kg

= 24113.54 kg

- Akibat beban hidup BTR dan BGT

V_{LL} = 65943 kg

- Akibat beban Truk

V_{TT} = 52650 kg

Vu = V_{DL} + V_{LL} + V_{TT}

= 24113.54 kg + 65943 kg + 52650 kg

= 142706.54 kg

Jadi Vu yang digunakan adalah 142706.54 kg. Maka kuat geser sebagai berikut (RSNI T-03-2005 ps.7.8):

Luas penampang badan

$$\frac{h}{tw} = \frac{1128}{22} = 51{,}27$$

Kn $= 5 + \frac{5}{(\frac{a}{h})^2} = 5 + \frac{5}{(\frac{500}{1128})^2} = 30{,}45$

$$\frac{h}{tw} \leq 1{,}1\sqrt{\frac{Kn\ x\ E}{fy}}$$

$$51{,}27 \leq 1{,}1\sqrt{\frac{30{,}45\ x\ 200000}{410}}$$

51,27 < 134.058 , maka kuat geser :

Vn = 0,6 x fy x Aw

= 0,6 x 410 x 1200 x 22

= 6494400 N

= 649440 kg

Vu < ϕVn

142706.54 kg < 0,9 x Vn

142706.54 kg < 0,9 x 649440 kg

142706.54 kg < 584496 kg **(OK)**

5.2.6. Kontrol Kekuatan Lentur Sesudah Komposit

Menurut SNI T-03-2005 ps 8.2.1 lebar efektif pelat beton diambil nilai terkecil dari :

- 1/5 bentang gelagar
- jarak antar gelagar

Dimana :

Panjang gelagar (L) = 10000 mm

Jarak antar gelagar (s) = 4000 mm

b_{eff} < 1/5 L = 10000/5 = 2000 mm

b_{eff} < s = 4000 mm

diambil yang terkecil , b_{eff} = 2000 mm

- kontrol kriteria penampang

$$\frac{h}{tw} \leq \frac{1680}{\sqrt{fy}}$$

$$\frac{1128}{22} \leq \frac{1680}{\sqrt{410}}$$

51,27 ≤ 82,97 maka termasuk penampang kompak

- Menentukan garis netral

C = 0,85 x fc' x a x b_{eff} (Setiawan, 2008)

T = As x fy

= 54390 mm^2 x 410 N/mm^2

= 22299900 N

C = T

0,85 x fc' x a x b_{eff} = As x fy

$$a = \frac{As\ x\ fy}{0{,}85\ x\ fc'x\ b_{eff}}$$

$$= \frac{54390\ mm^2\ x\ 410\ N/mm^2}{0{,}85\ x\ 30\ N/mm^2 x\ 2000\ mm} = 437.25 \text{ mm}$$

Karena nilai a melebihi tebal pelat beton maka sumbu netral berada pada gelagar sehingga distribusi tegangan ditunjukkan seperti pada gambar 5.15.

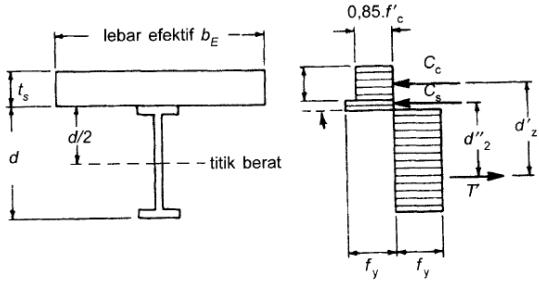

Gambar 5. 15 Distribusi Tegangan Plastis

Cc = 0,85 x fc' x beff x ts

= 0,85 x 30 N/mm^2 x 2000 mm x 250 mm

= 12750000 N

Dari keseimbangan gaya diperoleh hubungan

T' = Cc + Cs

Besarnya T' sekarang lebih kecil daripada As x fy yaitu :

T' = As x fy – Cs

Dengan menyamakan persamaan diatas maka diperoleh:

Cs $= \frac{T-Cc}{2}$

$= \frac{22299900\ N - 12750000\ N}{2}$

= 4774950 N

Menentukan nilai n

Es = 200000 Mpa

Ec = 25742.96 Mpa

n = $\frac{Es}{Ec} = \frac{200000}{25742.96} = 7{,}769$

konversi terhadap baja

btr = $\frac{b_{eff}}{n} = \frac{2000}{7{,}769} = 257.4\ mm$

Luas total (Atr) = btr x ts

= 257.4 mm x 250 mm

= 64357.4 mm^2

Mencari garis netral

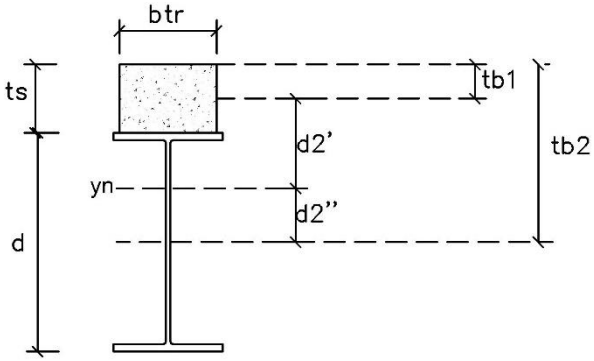

Gambar 5. 16 Sumbu Netral

tb1 = ½ x ts

= ½ x 250 mm = 125 mm

tb2 = ts + ½ x d

= 250 + ½ x 1200 =850 mm

Tabel 5. 5 Sumbu Netral Penampang Komposit

Material	An (mm)	Jarak serat atas ke titik berat benda (tb1,tb2)(mm)	AnxYn (mm)
Beton	64357.4	125	8044675
Baja	54390	850	46231500
Jumlah	118747.4	-	54276175

$$Yn = \frac{\sum AnxYn}{\sum An}$$

$$= \frac{54276175.06}{118747.4} = 457.07 \text{ mm}$$

d_2' = Yn – ½ ts

= 457.07 – ½ x 250 = 332.07mm

d_2'' = tb2 – Yn

= 850 – 457.07 = 392.93 mm

Kuat lentur nominal :

Mn = Cc x d_2' + Cs x d_2'' (Setiawan, 2008)

= 12750000 N x 332.07 mm + 4774950 N x 392.93 mm

= 6110133799 Nmm

= 611013.38 kgm

Mencari momen inersia

Tabel 5. 6 Momen Inersia Penampang

Material	An	d	Io	Io+A.d^2
Beton	64357.4	332.0725	2604166667	9700996668
Baja	54390	392.9275	1260000000	9657380598
			I total=	19358377265

Inersia penampang = 19358377265 mm^4

5.2.7. Perhitungan Shear Connector

Untuk jarak perhitungan *shear connector* (RSNI T-03-2005 ps.8.6.3) tidak boleh melebihi nilai sebagai berikut :

- 600 mm
- 2 kali tebal lantai
- 4 kali tinggi penghubung

Untuk diameter shear connector tidak boleh melebihi :

- 1,5 kali tebal pelat sayap bila pelat sayap memikul tegangan tarik.
- 2,0 kali tebal pelat sayap bila tidak terdapat tegangan tarik.

Digunakan shear connector jenis paku/stud (Arcfix stud welding) dengan data sebagai berikut :

Diameter = 22 mm
Tinggi = 150 mm
Asc = 380.1 mm^2
fc' = 30 Mpa
Ec = 25743 Mpa
Fu = 410 Mpa

Kapasitas nominal 1 stud

Vsu = 0,5 x Asc $\sqrt{fc' \; x \; Ec}$
= 0,5 x 380,1 x $\sqrt{30 \; x \; 25743}$
= 167030,245 N

Vls = 0,55 x n x Vsu
= 0,55 x 1 x 167030,245
= 91866.635 N

Gaya geser yang bekerja

V = 1427065,4 N

Gaya geser persatuan Panjang

$V_L = \frac{V \; x \; At \; x \; Yc}{I}$

$= \frac{1427065,4 \; x \; 64357,4 \; x \; 332,07}{19358377265}$

= 1575.456 N

Cek syarat , V_L < ∅Vls

1575,456 N < 0,75 x 91866.635 N

1575,456 N < 68899.9 N **(OK)**

Jumlah *shear connector*

Vh = As x fy

= 54390 mm^2 x 410 N/mm^2

= 22299900 N

N = Vh/Vsu

= 22299900 N / 167030,245 N

= 134 buah

Direncanakan jumlah *shear connector* 2 stud tiap baris sehingga jumlah baris = 134/2 = 67 baris.

Jarak antar konektor yang digunakan

S = 10000/67 = 149,25 mm

Jumlah stud yang digunakan sebanyak 144 buah dengan 2 stud perbaris, sehingga ada 72 baris dengan masing-masing baris stud berjarak 140 mm.

5.2.8. Perhitungan Sambungan Gelagar Melintang

Sambungan siku pada box girder

Gaya geser (Vu) = 1427,065 kN

Momen Ultimate (Mu) = 4263,52 kNm

Rencana :

Diameter baut, (db) = 22 mm

Luas baut, (Ab) = 380,13 mm^2

fu baut, (fub) = 825 Mpa

Pelat sambung(t) = 15 mm

fu pelat, (fup) = 370 Mpa

Koef gesek (r1) = 0,4

φ = 0,75

Tahanan Geser

1 bidang geser, (m) = 1

φRn = φ x r1 x m x fub x Ab

= 0,75 x 0,4 x 1 x 825 x 380,13

= 94,083 kN

2 bidang geser, (m) = 2

φRn = φ x r1 x m x fub x Ab

= 0,75 x 0,4 x 2 x 825 x 380,13

= 188,166 kN

Tahanan Tumpu

φRn = φ x 2.4 x db x tp x fup

= 0,75 x 2,4 x 22 x 15 x 370

= 219,78 kN

Jumlah baut sambungan badan 2 bidang geser

n = Vu/Vd

= 1427,065 kN / 188,166 kN

= 7,5 ≈ 8 buah

Jumlah baut sambungan sayap 1 bidang geser

Gaya gese flens = $\frac{\frac{Mu}{\phi}.h1}{\Sigma hi^2} = \frac{\frac{4263520}{0,75}.1,35}{8630}$ = 889,26 kN

n = 889,26 kN / 94,083 kN

= 9,45≈ 10 buah

Syarat jarak baut (RSNI T-03-2005)

Jarak ke tepi (S1) = 1,5 db s/d (4tp+100) atau 200 mm

1,5 db = 1,5 x 22 mm = 33 mm

4tp+100 = 4 x 10 + 100 = 140 mm

S1 digunakan = 50 mm

Jaarak antar baut = 2,5 db s/d 15 tp atau 200 mm

2,5 db = 2,5 x 22 mm = 55 mm

15 tp = 15 x 10 = 150 mm

S digunakan = 100 mm

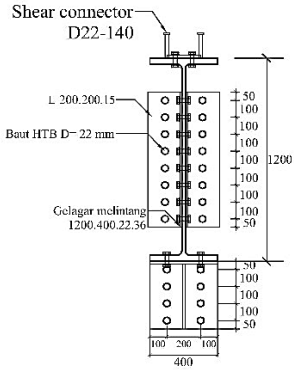

Gambar 5. 17 Sambungan Gelagar Melintang

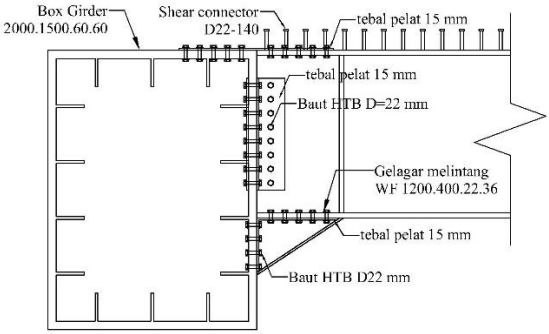

Gambar 5. 18 Sambungan Gelagar Melintang pada Box Girder

5.3. Permodelan Struktur

Permodelan struktur jembatan ini menggunakan program bantu CSI Bridges V20. Dibahas mulai dari permodelan struktur, pembebanan dan analisa struktur. Dilakukan pembebanan statik dan dinamik. Permodelan dengan tiga dimensi (3D) untuk lebih jelasnya lihat pada gambar 5.19 sampai gambar .

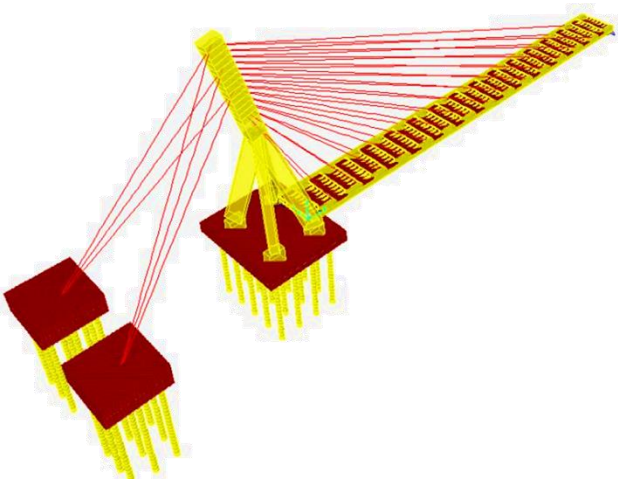

Gambar 5. 19 Tampak Perspektif Jembatan

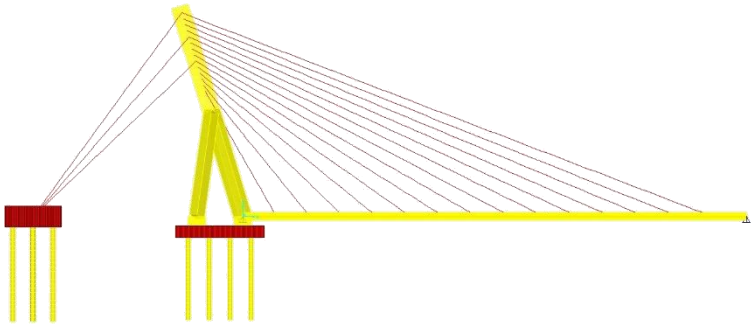

Gambar 5. 20 Tampak Memanjang Jembatan

Gambar 5. 21 Tampak Atas Jembatan

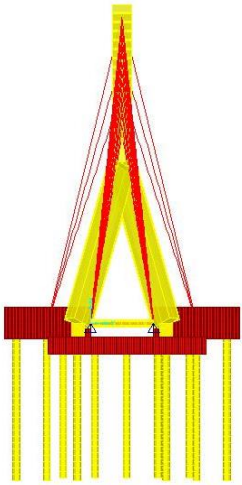

Gambar 5. 22 Tampak Melintang Jembatan

5.3.1. Analisa Statik

Beban statik terdiri dari beban tetap (berat sendiri dan beban mati tambahan), beban hidup, dan beban angin. Untuk beban sendiri struktur seperti *steel box girder*, *pylon*, gelagar dan kabel akan dihitung secara otomatis oleh program bantu CSI Bridge.

1. Beban Mati Struktur (MS)

   Gelagar memanjang = 0,66 kN/m
   Gelagar melintang = 4,27 kN/m
   Steel box girder = 36,24 kN/m

2. Beban Mati Perkerasan dan Utilitas (MA)

   Pelat beton = 6 kN/m^2
   Aspal = 1,54 kN/m^2
   Railing = 1,57 kN/m

3. Beban Lajur (TD)

- Beban Terbagi Rata (BTR)

  Untuk L ≤ 30 m , q = 9 kN/m^2

  Untuk L ≥ 30 m , q = $9\left(0{,}5+\frac{15}{L}\right)$ kN/m^2

  = $9\left(0{,}5+\frac{15}{120}\right)$ kN/m^2

  = 5,625 kN/m^2

  qBTR = q x lebar jembatan
  = 5,625 kN/m^2 x 10 m
  = 56,25 kN/m

- Beban Garis Terpusat (BGT)

  Menurut SNI 1725-2016 pasal 8.3.1 besarnya BGT adalah 49 kN/m. dengan bentang total jembatan pada desain ini adalah 120 m maka nilai Faktor Beban Dinamis (FBD) diambil sebesar 30%.

  P_{BGT} = P_{BGT} (1+FBD)
  = 49 kN/m (1+30%)
  = 63,7 kN

4. Beban Truk (TT)

   Faktor beban dinamis, DLA = 30%
   Beban truk T = 112,5 kN
   P_{TT} = T x (1+DLA)

= 112,5 kN x (1+0,3)
= 146,25 kN

5. Gaya Rem (TB)

Untuk gaya rem, sesuai dengan SNI 1726-2016 pasal 8.7 gaya yang diambil terbesar dari :

- 25% dari berat ganda truk desain
  TB= 25% x (T x 2)
  = 25% x (112,5 kN x 2)
  = 56,25 kN
- 5% dari beban truk rencana ditambah beban terbagi rata
  TB= 5% x (Beban truk+BTR)
  = 5% x (146,25 kN +5,625 kN/m^2 x 7 m x 120 m)
  = 243,56 kN

Diambil nilai yang terbesar yaitu TB = 243,56 kN

6. Beban Pejalan Kaki (TP)

Sesuai dengan SNI 1725-2016 pasal 8.9 semua komponen trotoar lebih lebar dari 600 mm harus direncanakan untuk memikul beban pejalan kaki dengan intensitas 5 kN/m^2.

W pejalan kaki = 5 kN/m^2 x 1,5 m
= 7,5 kN/m

7. Beban Angin

- Beban angin pada struktur (EW_S)

Berdasarkan SNI 1725-2016 pasal 9.6.1 untuk jembatan dengan elevasi lebih tinggi dari 10000 mm diatas permukaan tanah atau permukaan air, kecepatan angin rencana, V_{DZ}, harus dihitung dengan persamaan sebagai berikut :

$$V_{DZ} = 2{,}5 \text{ x } V0 \text{ x } \left(\frac{V_{10}}{V_B}\right) ln \frac{Z}{Z0}$$

Dimana :

V_{DZ} = Kecepatan angin rencana pada elevasi rencana, Z (km/jam)

V_{10} = kecepatan angin pada elevasi 10000mm diatas permukaan tanah atau diatas permukaan air rencana (km/jam)

V_B = kecepatan angin rencana yaitu 90 hingga 126 km/jam pada elevasi 1000 mm yang akan menghasilkan tekanan.

Z = elevasi struktur diukur dari permukaan tanah atau dari permukaan air dimana beban angin dihitung (Z>10000 mm).

V_0 = kecepatan gesekan angin, yang merupakan karakteristik meteorologi, sebagaimana ditentukan dalam Tabel 5.7, untuk berbagai macam tipe permukaan di hulu jembatan (km/jam)

Z0 = Panjang gesekan di hulu jembatan, yang merupakan karakteristik meteorology, ditentukan pada Tabel 5.7.

V10 dapat diperoleh dari :

- Grafik kecepatan angin dasar untuk berbagai periode ulang
- Survei angin pada lokasi jembatan
- Jika tidak ada data yang lebih baik, perencana dapat mengansumsikan bahwa $V_{10} = V_B$ = 90 s/d 126 km/jam

Tabel 5. 7 Nilai V_0 dan Z_0 untuk variasi kondisi permukaan hulu (SNI 1725-2016)

Kondisi	Lahan Terbuka	Sub Urban	Kota
V0 (km/jam)	13,2	17,6	19,3
Z0 (mm)	70	1000	2500

Z = 30 m = 30000 mm

$$V_{DZ} = 2{,}5 \text{ x } V_0 \text{ x } \left(\frac{V_{10}}{V_B}\right) ln \frac{Z}{Z0}$$

$$= 2{,}5 \text{ x } 13{,}2 \text{ x } \left(\frac{100}{100}\right) ln \frac{30000}{70}$$

= 199,9 km/jam

= 55,55 m/s

Dengan mengetahui kecepatan angin yang bekerja, dapat ditentukan beban angin pada struktur dimana tekanan angin rencana dalam Mpa dengan menggunakan persamaan :

$$P_D = P_B \left(\frac{V_{DZ}}{V_B}\right)^2$$

Dimana :

PD = tekanan angin dasar yang ditentukan dalam tabel 5.8

Tabel 5. 8 Tekanan Angin Dasar(SNI 1725-2016)

Komponen Bangunan Atas	Angin Tekan(Mpa)	Angin Hisap (Mpa)
Rangka,kolom dan pelengkung	0.0024	0.0012
Balok	0.0024	N/A
Permukaan Datar	0.0019	N/A

$P_D = P_B \left(\frac{V_{DZ}}{V_B}\right)^2$

$= 0{,}0024 \left(\frac{19{,}99}{100}\right)^2$

$= 0{,}0096$ Mpa

$= 9{,}6$ kN/m^2

Beban angin yang diterima girder

PD = PD x tinggi girder

= 9,6 kN/m^2 x 2 m

= 19,2 kN

- Beban angin pada kendaraan (EW_L)

Beban angin juga akan dibebankan pada kendaraan yang melintas dimana telah diatur di SNI 1725-2016 pasal 9.6.1 dengan asumsi sebagai tekanan yang menerus sebesar 1,46 N/mm yang bekerja tegak lurus diatas 1800 mm diatas permukaan jalan. Maka beban angin pada kendaraan yang akan dimasukkan :

EW_L = 1,46 N/mm

= 1,46 kN/m

= 1,46 kN/m x (tinggi+ ½ tinggi box) x panjang segmen

= 1,46 kN/m x (1,8 m + ½ x 1 m) x 8 m

= 32,704 kNm

Untuk beban angin pada kendaraan akan dimasukkan sebagai momen torsi.

8. Beban Temperatur (EUn)

Sesuai dengan SNI 1725-2016 pasal 9.3.1 dimana deformasi akibat perubahan temperatur minimum atau temperatur maksimum dengan temperatur nominal yang diasumksikan dalam perencanaan

harus digunakan untuk menghitung perngaruh akibat deformasi yang terjadi akibat perbedaan suhu.

Tabel 5. 9 Sifat bahan rata-rata akibat pengaruh temperatur(SNI 1725-2016)

Bahan	**Koefisien perpanjangan akibat suhu (α)**	**Modulus Elastisitas (Mpa)**
Baja	12×10^{-6} °C	200.000
Beton : Kuat tekan < 30 Mpa Kuat tekan > 30 Mpa	 10×10^{-6} °C 11×10^{-6} °C	 4700√fc' 4700√fc'

Tabel 5. 10 Temperatur jembatan rata-rata nominal(SNI 1725-2016)

Tipe bangunan atas	**Temperatur jembatan rata-rata minimum (1)**	**Temperatur jembatan rata-rata maksimum**
Lantai beton di atas gelagar atau boks beton.	15°C	40°C
Lantai beton di atas gelagar, boks atau rangka baja.	15°C	40°C
Lantai pelat baja di atas gelagar, boks atau rangka baja.	15°C	45°C
CATATAN (1) Temperatur jembatan rata-rata minimum bisa dikurangi 5°C untuk lokasi yang terletak pada ketinggian lebih besar dari 500 m diatas permukaan laut.		

5.3.2. Analisa Dinamik

Dalam analisa beban gempa digunakan acuan SNI 2833-2016 menggunakan metode *response spectrum* yang nantinya akan dimasukkan kedalam permodelan CSI Bridge.

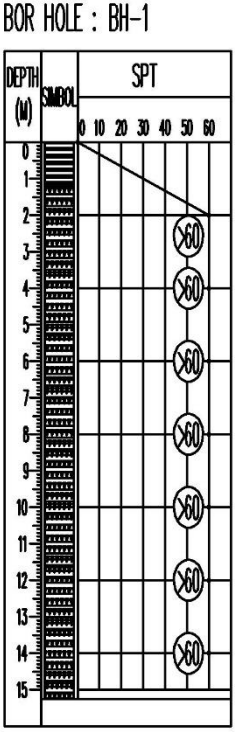

Gambar 5. 23 Data Tanah Untuk Menentukan Jenis Tanah

Tahanan penetrasi standar lapangan rata-rata $\overline{N}$

$$\overline{N} = \frac{\sum di}{\sum di/Ni} = \frac{14}{0{,}233} = 60$$

Kondisi tanah termasuk dalam kategori (Tanah Sangat Padat) dikarenakan $\overline{N}$>50 lihat Tabel 5.11.

Tabel 5. 11 Kelas Situs (SNI 2833-2016)

Kelas Situs	$\overline{V}_s$ (m/s)	$\overline{N}$	$\overline{S}_u$ (kPa)
A. Batuan Keras	$\overline{V}_s \geq 1500$	N/A	N/A
B. Batuan	$750 < \overline{V}_s \leq 1500$	N/A	N/A
C. Tanah Sangat Padat dan Batuan Lunak	$350 < \overline{V}_s \leq 750$	$\overline{N} > 50$	$\overline{S}_u \geq 100$
D. Tanah Sedang	$175 < \overline{V}_s \leq 350$	$15 \leq \overline{N} \leq 50$	$50 \leq \overline{S}_u \leq 100$
E. Tanah Lunak	$\overline{V}_s < 175$	$\overline{N} < 15$	$\overline{S}_u < 50$
	Atau setiap profil lapisan tanah dengan ketebalan lebih dari 3 m dengan karakteristik sebagai berikut : 1. Indeks plastisitas, PI > 20, 2. Kadar air (w) $\geq$ 40%, dan 3. Kuat geser tak terdrainase $\overline{S}_u$ < 25 kPa		
F. Lokasi yang membutuhkan penyelidikan geoteknik dan analisis respon dinamik spesifik	Setiap profil lapisan tanah yang memiliki salah satu atau lebih dari karakteristik seperti : - Rentan dan berpotensi gagal terhadap beban gempa seperti likuifaksi, tanah lempung sangat sensitif, tanah tersementasi lemah - Lempung organik tinggi dan/atau gambut (dengan ketebalan > 3m) - Plastisitas tinggi (ketebalan H > 7,5m dengan PI > 75) - Lapisan lempung lunak/medium kaku dengan ketebalan H > 35m		

Catatan : N/A = tidak dapat digunakan

Untuk penentuan respon spektra di permukaan tanah, diperlukan suatu faktor amplifikasi untuk PGA, periode pendek (T=0,2 detik) dan periode 1 detik. Faktor amplifikasi meliputi faktor amplifikasi getaran terkait percepatan pada batuan dasar (FPGA), faktor amplifikasi periode pendek (Fa) dan factor amplifikasi terkait percepatan yang mewakili getaran periode 1 detik (Fv). Tabel 5.12 dan Tabel 5.13 memberikan nilai-nilai FPGA, Fa, dan Fv untuk berbagai klasifikasi jenis tanah.

Tabel 5. 12 Faktor Amplifikasi untuk PGA dan 0,2 Detik (SNI 2833-2016)

Kelas situs	PGA ≤ 0,1 $S_s \leq 0.25$	PGA = 0,2 $S_s = 0.5$	PGA = 0,3 $S_s = 0.75$	PGA = 0,4 $S_s = 1.0$	PGA > 0,5 $S_s \geq 1.25$
Batuan Keras (SA)	0.8	0.8	0.8	0.8	0.8
Batuan (SB)	1.0	1.0	1.0	1.0	1.0
Tanah Keras (SC)	1.2	1.2	1.1	1.0	1.0
Tanah Sedang (SD)	1.6	1.4	1.2	1.1	1.0
Tanah Lunak (SE)	2.5	1.7	1.2	0.9	0.9
Tanah Khusus (SF)	SS	SS	SS	SS	SS

Keterangan:

PGA adalah percepatan puncak batuan dasar sesuai peta percepatan puncak di batuan dasar (PGA) untuk probabilitas terlampaui 7% dalam 75 tahun (Gambar 5.24).

S_s adalah parameter respons spektra percepatan gempa untuk periode pendek (T=0,2 detik) dengan probabilitas terlampaui 7% dalam 75 tahun sesuai dengan Gambar 5.25.

SS adalah lokasi yang memerlukan investigasi geoteknik dan analisis respons dinamik spesifik

Tabel 5. 13 Nilai Faktor Amplifikasi untuk Periode 1 Detik (F_v) (SNI 2833-2016)

Kelas situs	$S_1 \leq 0.1$	$S_1 = 0.2$	$S_1 = 0.3$	$S_1 = 0.4$	$S_1 \geq 0.5$
Batuan Keras (SA)	0.8	0.8	0.8	0.8	0.8
Batuan (SB)	1.0	1.0	1.0	1.0	1.0
Tanah Keras (SC)	1.7	1.6	1.5	1.4	1.3
Tanah Sedang (SD)	2.4	2.0	1.8	1.6	1.5
Tanah Lunak (SE)	3.5	3.2	2.8	2.4	2.4
Tanah Khusus (SF)	SS	SS	SS	SS	SS

Keterangan:

S1 adalah parameter respons spektra percepatan gempa untuk periode 1 detik dengan probabilitas terlampaui 7% dalam 75 tahun sesuai dengan Gambar 5.26.

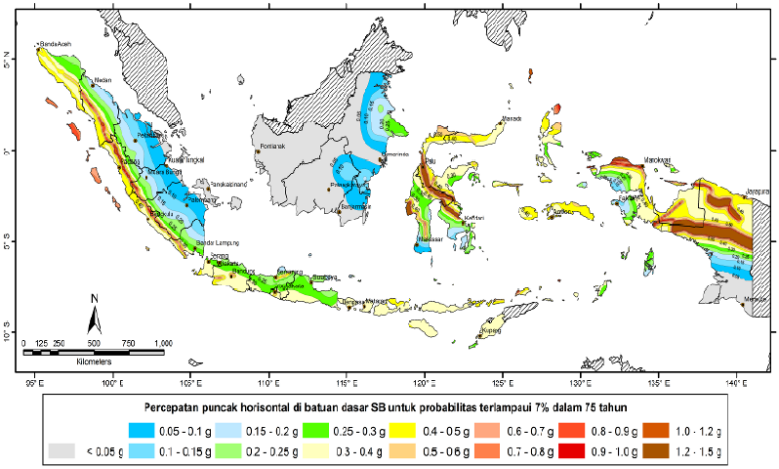

Gambar 5. 24 Peta Percepatan Puncak di Batuan Dasar (PGA) untuk Probabilitas Terlampaui 7% dalam 75 Tahun

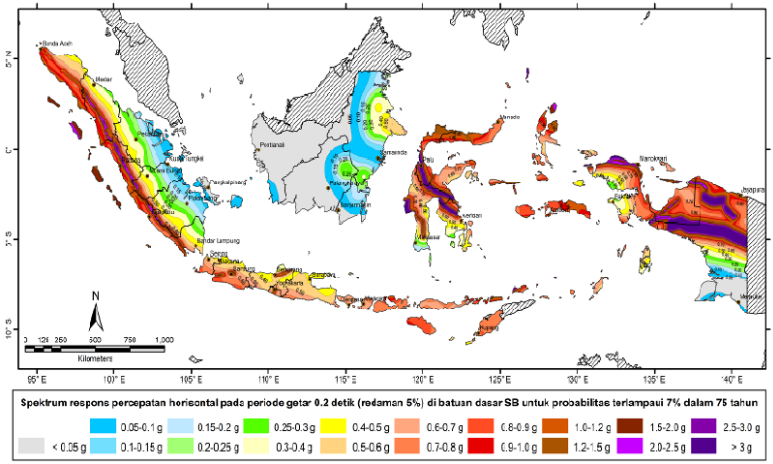

Gambar 5. 25 Peta Respon Spektra Percepatan 0.2 Detik di Batuan Dasar untuk Probabilitas Terlampaui 7% dalam 75 Tahun

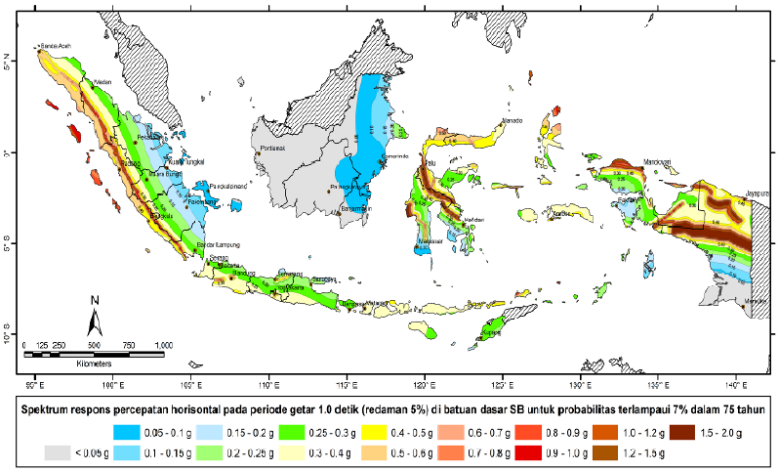

Gambar 5. 26 Peta Respon Spektra Percepatan 1 Detik di Batuan Dasar untuk Probabilitas Terlampaui 7% dalam 75 Tahun

Dari peta zonasi gempa diatas dan penelusuran pada website http://petagempa.pusjatan.pu.go.id dengan memasukkan koordinat 8,363190°S 112,460253°E didapatkan nilai :

PGA = 0,394
S_S = 0,846
S1 = 0,318
SDS = 0,898
SD1 = 0,471

Tabel 5. 14 Spektrum Respon Desain di Permukaan Tanah

Variabel	T(detik)	Sa(g)
As	0	0.397
T0	0.105	0.898
SDS	0.2	0.898
Ts	0.525	0.898
Ts+0.1	0.6	0.786
Ts+0.2	0.7	0.673
Ts+0.3	0.8	0.589
Ts+0.4	0.9	0.524
Ts+0.5	1	0.471
SD1	1	0.471
Ts+0.6	1.1	0.428
Ts+0.7	1.2	0.393
Ts+0.8	1.3	0.363
Ts+0.9	1.4	0.337
Ts+1	1.5	0.314
Ts+1.1	1.6	0.295
Ts+1.2	1.7	0.277
Ts+1.3	1.8	0.262
Ts+1.4	1.9	0.248
Ts+1.5	2	0.236
Ts+1.6	2.1	0.224
Ts+1.7	2.2	0.214
Ts+1.8	2.3	0.205
Ts+1.9	2.4	0.196
Ts+2	2.5	0.189
Ts+2.1	2.6	0.181
Ts+2.2	2.7	0.175
Ts+2.3	2.8	0.168
Ts+2.4	2.9	0.163
Ts+2.5	3	0.157
Ts+2.6	3.1	0.152
Ts+2.7	3.2	0.147
Ts+2.8	3.3	0.143
Ts+2.9	3.4	0.139
Ts+3	3.5	0.135
Ts+3.1	3.6	0.131
Ts+3.2	3.7	0.127
Ts+3.3	3.8	0.124
Ts+3.4	3.9	0.121
Ts+3.5	4	0.118

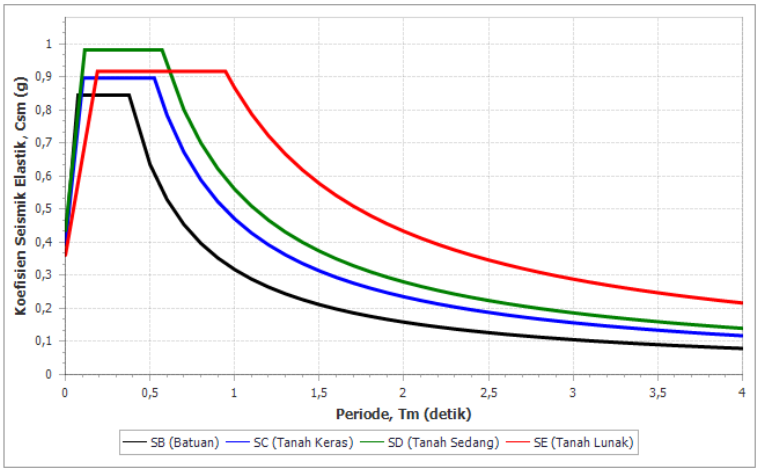

Gambar 5. 27 Grafik Response Spectrum
(www.petagempa.pusjatan.go.id)

5.3.3. Kombinasi Pembebanan

- Kombinasi Beban Analisa Statik

Tabel 5. 15 Kombinasi Pembebanan Analisa Statik

Keadaan Batas	Konfigurasi
Kuat I	$1{,}1MS+2MA+1{,}8TD+1{,}8TT+1{,}8TB+1{,}8TP+E_{UN}$
Kuat II	$1{,}1MS+2MA+1{,}4TD+1{,}8TT+1{,}4TB+1{,}4TP+E_{UN}$
Kuat III	$1{,}1MS+2MA+1{,}4EW_S+E_{UN}$
Kuat IV	$1{,}1MS+2MA+E_{UN}$
Kuat V	$1{,}1MS+2MA+0{,}4EW_S+EW_L+E_{UN}$
Layan I	$1MS+1MA+1TD+1TT+1TB+1TP+0{,}3EW_S+1EW_L\ E_{UN}$
Layan II	$1MS+1MA+1{,}3TD+1{,}3TT+1{,}3TB+1{,}3TP+E_{UN}$
Layan III	$1MS+1MA+0{,}8TD+0{,}8TT+0{,}8TB+0{,}8TP+E_{UN}$
Layan IV	$1MS+1MA+0{,}7EW_S+E_{UN}$

Keterangan :

MS = Beban Mati Sendiri

MA = Beban Mati Tambahan

TD = Beban Lajur (BTR dan BGT)
TT = Beban Truk
TB = Beban Rem
TP = Beban Pejalan Kaki
BTR = Beban Terbagi Rata
BGT = Beban Garis Terpusat
EW_S = Beban Angin pada Struktur
EW_L = Beban Angin pada Kendaraan
E_{UN} = Temperatur Seragam

- Kombinasi Beban Analisa Dinamik

Tabel 5. 16 Kombinasi Beban Analisa Dinamik

Keadaan Batas	Konfigurasi
Ekstrem I	$1{,}1MS+2MA+0{,}3TD+0{,}3TT+0{,}3TB+0{,}3TP+1EQ_X+0{,}3EQ_Y$
Ekstrem II	$1{,}1MS+2MA+0{,}3TD+0{,}3TT+0{,}3TB+0{,}3TP+0{,}3EQ_X+1EQ_Y$
Ekstrem III	$1{,}1MS+2MA+0{,}3TD+0{,}3TT+0{,}3TB+0{,}3TP+1EW_S+1EQ_X+0{,}3EQ_Y$
Ekstrem IV	$1{,}1MS+2MA+0{,}3TD+0{,}3TT+0{,}3TB+0{,}3TP+1EW_S+0{,}3EQ_X+1EQ_Y$

5.3.4. Pembebanan Kabel

Pada kabel akan diberikan gaya tarik dengan 2 tahap yaitu tahap awal dan tahap akhir dengan adanya beban yang bekerja pada lantai kendaraan.

- **Tahap Awal**

Pada tahap awal dilakukan perhitungan untuk mencari gaya tarik pada kabel pada saat pelaksanaan akibat beban mati sendiri ditambah beban *form traveler*.

Perhitungan beban :

γ_{Baja} = 78,5 kN/m^3
γ_{Beton} = 24 kN/m^3

- Box Girder = γ_{Baja} x As x λ x FB x n
= 78,5 kN/m^3 x 0,462 m^2 x 8 m x 1,1 x 2
= 637.75 kN

- Gelagar Memanjang = γ_{Baja} x As x λ x FB x n
= 78,5 kN/m^3 x 0,00834 m^2 x 8 x 1,1 x 7
= 40.33 kN

- Gelagar Melintang = γ_{Baja} x As x λ x FB x n
  = 78,5 kN/m^3 x 0,0496 m^2 x 10 x 1,1 x 2
  = 85,66 kN
- Pelat Beton = γ_{Beton} x tebal x lebar x λ x FB
  = 24 kN/m^3 x 0,25 m x 10 m x 8 x 1,3
  = 624 kN
- *Form Traveler* = 1000 kN

$$T = \frac{0.5\ (W_{DL} + P_{FT})}{\sin \alpha_i}$$

Tabel 5. 17 Gaya Tarik Tendon S Tahap Awal

No	α	sin α	T (kN)
S1	57	0.839	1125.43
S2	48	0.743	1270.10
S3	42	0.669	1410.59
S4	37	0.602	1568.37
S5	34	0.559	1687.91
S6	31	0.515	1832.62
S7	29	0.485	1946.88
S8	27	0.454	2079.05
S9	25	0.423	2233.38
S10	24	0.407	2320.59
S11	23	0.391	2415.64
S12	22	0.375	2519.62
S13	21	0.358	2633.79
S14	20	0.342	2759.68

Untuk mencari gaya tarik kabel B digunakan persamaan sebagai berikut:

$$H = T \times \cos \alpha$$

$$T_{B1} = \frac{\sum_{S1}^{S6} H}{Cos\ \alpha}$$

$$T_{B2} = \frac{\sum_{S7}^{S10} H}{Cos\ \alpha}$$

$$T_{B3} = \frac{\sum_{S11}^{S14} H}{Cos\ \alpha}$$

Dimana ,

H = Gaya Horizontal kabel

Tabel 5. 18 Gaya Tarik Tendon B Tahap Awal

No	α	cos α	T (kN)	H (kN)
S1	57	0.545	1125.43	613.0
S2	48	0.669	1270.1	849.9
S3	42	0.743	1410.59	1048.3
S4	37	0.799	1568.37	1252.6
S5	34	0.829	1687.91	1399.3
S6	31	0.857	1832.62	1570.9
			Jumlah	6733.8
S7	29	0.875	1946.88	1702.8
S8	27	0.891	2079.05	1852.4
S9	25	0.906	2233.38	2024.1
S10	24	0.914	2320.59	2120.0
			Jumlah	7699.3
S11	23	0.921	2415.64	2223.6
S12	22	0.927	2519.62	2336.2
S13	21	0.934	2633.79	2458.9
S14	20	0.940	2759.68	2593.3
			Jumlah	9611.9

No	α	cos α	T (kN)
B1	43	0.731	5706.00
B2	48	0.669	7680.00
B3	53	0.602	11717.00

- **Tahap Akhir**

Pada tahap akhir dilakukan perhitungan untuk mencari gaya tarik pada kabel akibat beban mati dan beban hidup saat keadaan layan.

Perhitungan beban :

γ_{Baja} = 78,5 kN/m^3

γ_{Beton} = 24 kN/m^3

Beban Mati (DL)

- Box Girder = γ_{Baja} x As x λ x FB x n
  = 78,5 kN/m^3 x 0,462 m^2 x 8 m x 1 x 2
  = 579,77 kN
- Gelagar Memanjang = γ_{Baja} x As x λ x FB x n
  = 78,5 kN/m^3 x 0,00834 m^2 x 8 x 1 x 7
  = 36,66 kN
- Gelagar Melintang = γ_{Baja} x As x λ x FB x n
  = 78,5 kN/m^3 x 0,0496 m^2 x 10 x 1 x 2
  = 77,87 kN
- Pelat Beton = γ_{Beton} x tebal x lebar x λ x FB
  = 24 kN/m^3 x 0,25 m x 10 m x 8 x 1
  = 480 kN

Beban Hidup (LL)

- Beban Terbagi Rata (BTR)

  qBTR = q x lebar x λ x FB
  = 5,625 kN/m^2 x 7 m x 8 m x 2
  = 630 kN
- Beban Garis Terpusat (BGT)

  P_{BGT} = P_{BGT} x lebar x FB
  = 49 kN/m x 7 m x 2
  = 686 kN

$$T = \frac{0.5\ (W_{DL} + W_{LL})}{\sin \alpha_i}$$

Tabel 5. 19 Gaya Tarik Tendon S Tahap Akhir

No	α	sin α	T (kN)
S1	57	0.839	1484.67
S2	48	0.743	1675.52
S3	42	0.669	1860.85
S4	37	0.602	2068.99
S5	34	0.559	2226.70
S6	31	0.515	2417.59
S7	29	0.485	2568.33
S8	27	0.454	2742.68
S9	25	0.423	2946.28
S10	24	0.407	3061.32
S11	23	0.391	3186.72
S12	22	0.375	3323.89
S13	21	0.358	3474.51
S14	20	0.342	3640.58

Untuk mencari gaya tarik kabel B digunakan persamaan sebagai berikut:

$$H = T \times \cos \alpha$$

$$T_{B1} = \frac{\sum_{S1}^{S6} H}{Cos\ \alpha}$$

$$T_{B2} = \frac{\sum_{S7}^{S10} H}{Cos\ \alpha}$$

$$T_{B3} = \frac{\sum_{S11}^{S14} H}{Cos\ \alpha}$$

Tabel 5. 20 Gaya Tarik Tendon B Tahap Akhir

No	α	cos α	T (kN)	H (kN)
S1	57	0.545	1484.67	808.6
S2	48	0.669	1675.52	1121.1
S3	42	0.743	1860.85	1382.9
S4	37	0.799	2068.99	1652.4
S5	34	0.829	2226.7	1846.0
S6	31	0.857	2417.59	2072.3
			Jumlah	8883.3
S7	29	0.875	2568.33	2246.3
S8	27	0.891	2742.68	2443.7
S9	25	0.906	2946.28	2670.2
S10	24	0.914	3061.32	2796.7
			Jumlah	10157.0
S11	23	0.921	3186.72	2933.4
S12	22	0.927	3323.89	3081.9
S13	21	0.934	3474.51	3243.7
S14	20	0.940	3640.58	3421.0
			Jumlah	12680.0

No	α	cos α	T (kN)
B1	43	0.731	9141.96
B2	48	0.669	10103.63
B3	53	0.602	12560.82

5.3.5. Hasil Analisa Permodelan

Tabel 5. 21 Hasil Analisa Struktur *Steel Box* Girder

KOMBINASI	P	V2	V3	T	M2	M3
	KN	KN	KN	KN-m	KN-m	KN-m
KUAT I	30157	3031	283.6	2604	377.07	20705
KUAT II	29195	2331	263.7	2116	325.26	15410
KUAT III	31679	734.8	710	454.4	1722.7	4597.1
KUAT IV	52395	692.5	189.3	446.8	179.72	4187.1
KUAT V	27500	749.7	333.1	450.6	620.93	4566.2
LAYAN I	47521	1670	307.7	1550	564.43	10027
LAYAN II	46989	2067	234.7	1916	292.59	13631
LAYAN III	45787	1417	209.9	1306	227.83	8646.6
LAYAN IV	46788	650.7	425.4	366	929.62	4912.9
EKSTREM 1	11032	993.2	207.9	777.3	197.3	5484.7
EKSTREM 2	11038	990.3	215.6	778.9	202.45	5487.6
EKSTREM 3	15202	1027	563.8	789.8	1289.8	5545.8
EKSTREM 4	15207	1024	572.6	791.4	1298.9	5548.8

Tabel 5. 22 Hasil Analisa Struktur Pylon Atas

KOMBINASI	P	V2	V3	T	M2	M3
	KN	KN	KN	KN-m	KN-m	KN-m
KUAT I	78456	12847	230.1	0.595	2374.9	117441
KUAT II	74701	12849	179	0.463	1847.1	126976
KUAT III	61694	13467	8.777	0.154	135.24	160505
KUAT IV	59270	11961	1E-07	2E-07	2E-07	138936
KUAT V	61599	13470	2.529	0.044	37.983	160393
LAYAN I	64045	11678	126.8	0.298	1291	125882
LAYAN II	66832	11681	166.2	0.43	1715.2	118697
LAYAN III	62139	11684	102.3	0.265	1055.5	130616
LAYAN IV	54697	12439	4.388	0.077	67.621	149764
EKSTREM 1	62091	11644	39.56	26.84	402.73	131808
EKSTREM 2	62087	11639	42.37	89.23	418.89	131792
EKSTREM 3	62185	11633	35.47	26.76	306.13	131920
EKSTREM 4	62182	11633	38.28	89.15	322.29	131904

Tabel 5. 23 Hasil Analisa Struktur Pylon Bawah

KOMBINASI	P	V2	V3	T	M2	M3
	KN	KN	KN	KN-m	KN-m	KN-m
KUAT I	37473	2261	1357	3176	12315	35077
KUAT II	33486	2291	1280	2754	11148	36991
KUAT III	24245	2477	1248	1379	10592	43844
KUAT IV	21891	2186	1198	1432	9778	38083
KUAT V	24539	2419	1252	1304	10658	43734
LAYAN I	26442	2137	1095	2092	8963	35803
LAYAN II	29327	2098	1145	2387	9820	34344
LAYAN III	24343	2135	1108	1859	9080	36736
LAYAN IV	22919	2236	1148	1066	9847	40641
EKSTREM 1	23997	2164	1182	1751	9475	36666
EKSTREM 2	23999	2165	1182	1755	9480	36691
EKSTREM 3	24347	2221	1175	1822	9396	36742
EKSTREM 4	24349	2222	1176	1826	9401	36767

lendutan akibat beban hidup tidak boleh melampaui batasan sebagai berikut.

Lendutan yang terjadi pada dek jembatan harus lebih kecil dari
- L/400 untuk penampang baja dan komposit;
- L/800 untuk penampang beton.

Lendutan pada terjadi pada puncak menara harus lebih kecil dari
- H/400 untuk penampang baja;
- H/800 untuk penampang beton.

Dari hasil permodelan didapatkan lendutan yang terjadi:
- Dek jembatan = 0,243 m
- Pylon = 0,055 m

Kontrol ,
- Dek jembatan, L/400 = 120 / 400 = 0,3 m

Lendutan yang terjadi < Lendutan ijin
0,243 m < 0,3 m **(OK)**

- Pylon, H/800 = 50 / 800 = 0,06 m

Lendutan yang terjadi < Lendutan ijin
0,055 m < 0,06 m **(OK)**

5.3.6. Staging Analysis

Analisa metode pelaksanaan (*staging analysis*) merupakan suatu hal yang perlu dilakukan pada tipe jembatan spesial seperti jembatan *cable-stayed*. Konstruksi jembatan *cable-stayed* ini didesain dengan metode kantilever. Urutan pekerjaannya dimulai dengan pekerjaan pylon dari beton bertulang dengan slip form, pemasangan gelagar pada sisi pylon menggunakan perancah, pemasangan kabel, kemudian pemasangan form traveler pada gelagar yang telah terpasang untuk memasang gelagar berikutnya.

Untuk metode analisisnya dilakukan dengan metode *demolishing procedure* melalui *backward solution*. Dimulai dari keadaan final jembatan, kemudian dilanjutkan dengan melepas bagian perbagian segmen sampai keadaan awal menggunakan program bantu CSI Bridge.

- **Analisa Pembebanan Staging**

Pada saat pelaksanaan beban deck jembatan akan dipikul oleh *form traveler* yang kemudian akan disalurkan pada jembatan. Untuk melakukan staging analysis, terlebih dahulu dilakukan perhitungan pembebanan untuk *form traveler* dengan beban lantai kendaraan.

1. Beban *form traveler* (P_{FT})

Pada pelaksanaan akan menggunakan form traveler dari Shenghua Heavy Crane Group dengan spesifikasi sebagai berikut :

Tabel 5. 24 Spesifikasi *Form Traveler*

Item	Description	Specification
1	Capacity	100t
2	Segment length	3,5 m ~ 8 m
3	Deck Width	5 m ~ 35 m
4	Bridge Type	Balance Cantilever Box Girder or Cable Stay
5	Launching Mechanism	Hydraulic
6	Maximum Transverse	5%
7	Voltage	380V,50Hz,3phase AC or as request

8	Traveling speed (m/min)	1.5 ~ 3
9	Max Lifting height (m)	Customized
10	Hoisting speed(m/min)	2
11	Wire rope dia(mm)/spec.	206K*37W-1870GB/T8918
12	Rated Lifting Moment	1000 kN

Beban form traveler = 1000 kN

Gambar 5. 28 Form Traveler

2. Beban Lantai Kendaraan

Direncanakan beban lantai kendaraan dengan segmen per 8m dengan lebar lantai kendaraan 10 m yang akan diangkat oleh form traveler.

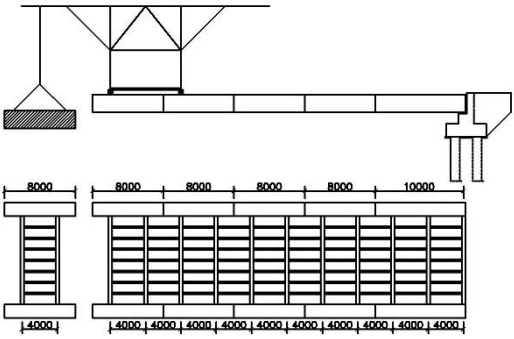

Gambar 5. 29 Segmen Deck saat Pengangkatan (mm)

Beban yang diterima *form traveler* :

Box = A x massa jenis x bentang x n
= 0,4616 m^2 x 78,5 kN/m^3 x 8 m x 2
= 579,77 kN

Gelagar Melintang = W x bentang x n
= 4,27 kN/m x 10 m x 2 = 85,4 kN

Gelagar Memanjang = W x bentang x n
= 0,66 kN/m x 4 m x 7
= 18,48 kN

Beban Total = 579,77 kN + 85,4 kN + 18,48 kN
= 683,65 kN ≈ 690 kN

Konfigurasi pembebanan dapat dilihat pada Tabel 5.23.

Tabel 5. 25 Konfigurasi Beban Saat *Staging Analysis*

Keadaan Batas	**Konfigurasi**
Staging	MS + MA + P_{FT}

Berikut ini adalah dimensi form traveler yang digunakaan dalam staging analysis dapat dilihat pada Gambar 5.30

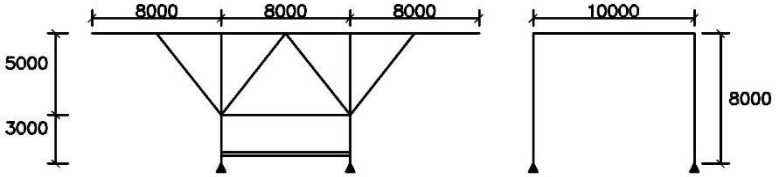

Gambar 5. 30 Dimensi Form Traveler (mm)

Dari perhitungan pembebanan didapatkan :

Form Traveler = 1000 kN
Segmen deck = 690 kN
Total = 1690 kN

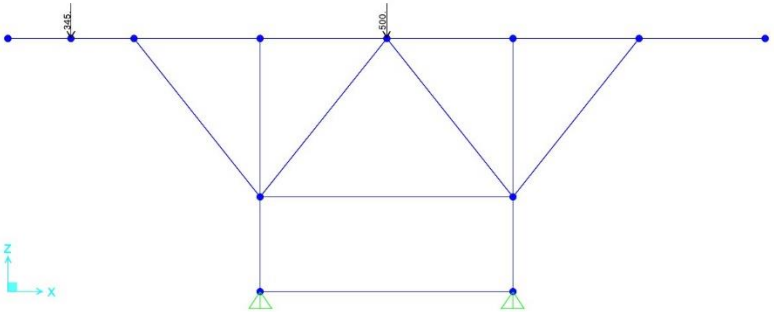

Gambar 5. 31 Input Beban Pada *Form Traveler*

Dalam penginputan beban pada *form traveler* saat permodelan di CSI Bridge, berat sendiri profil baja diabaikan. Untuk pembagian beban dibagi menjadi 2 yaitu tiap sisi form traveler menerima 345 kN untuk beban segmen dan 500 kN untuk beban *form traveler*. Dari pembebanan tersebut didapatkan hasil analisa CSI Bridge untuk form traveler seperti pada Gambar 5.32.

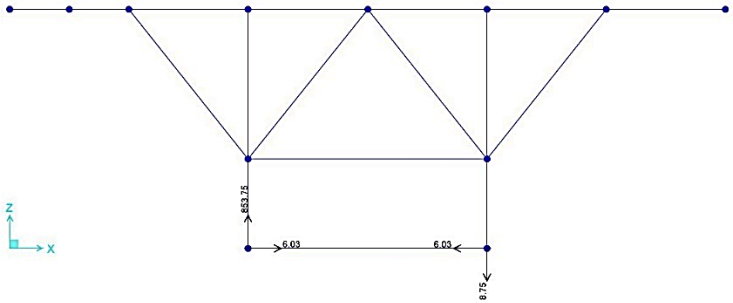

Gambar 5. 32 Hasil Analisa Reaksi Untuk *Form Traveler*

5.3.7. Hasil Analisa

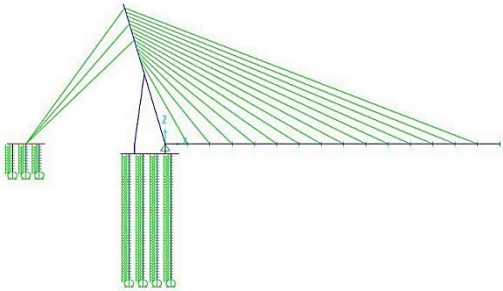

Gambar 5. 33 Permodelan saat Construction Stage 0 (CS 0)

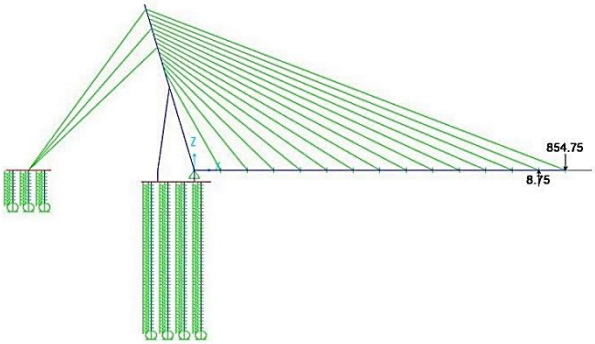

Gambar 5. 34 Permodelan saat Construction Stage 1 (CS 1)

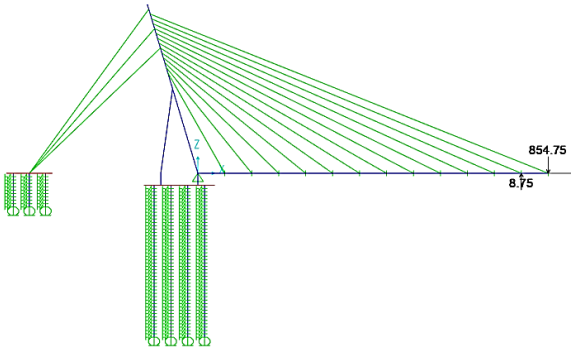

Gambar 5. 35 Permodelan saat Construction Stage 2 (CS 2)

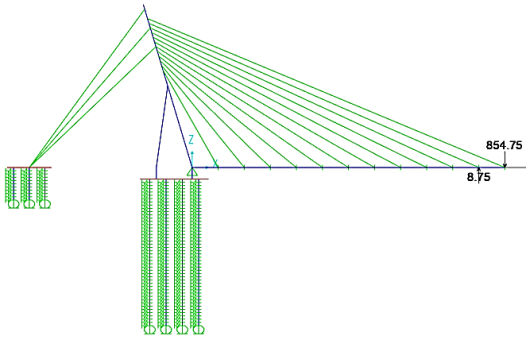

Gambar 5. 36 Permodelan saat Construction Stage 3 (CS 3)

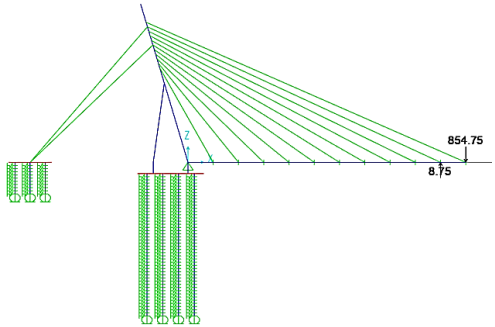

Gambar 5. 37 Permodelan saat Construction Stage 4 (CS 4)

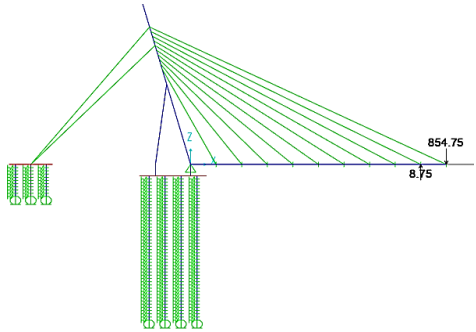

Gambar 5. 38 Permodelan saat Construction Stage 5 (CS 5)

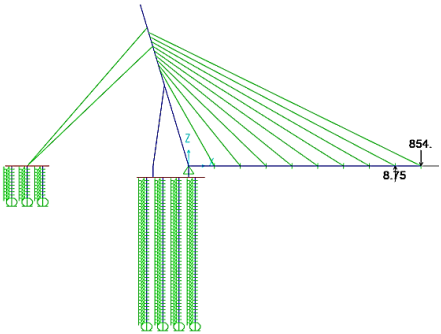

Gambar 5. 39 Permodelan saat Construction Stage 6 (CS 6)

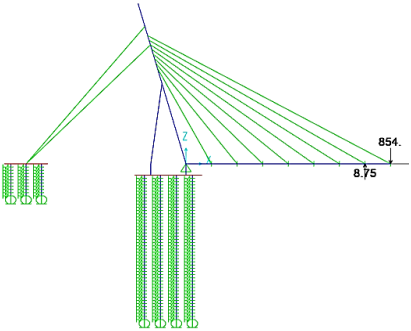

Gambar 5. 40 Permodelan saat Construction Stage 7 (CS 7)

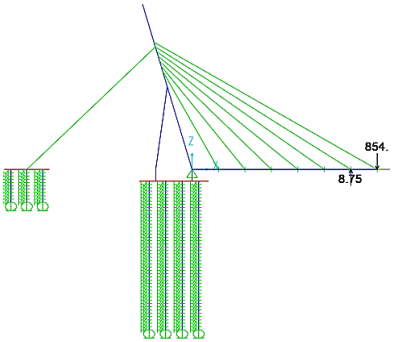

Gambar 5. 41 Permodelan saat Construction Stage 8 (CS 8)

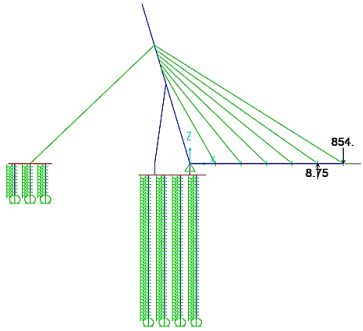

Gambar 5. 42 Permodelan saat Construction Stage 9 (CS 9)

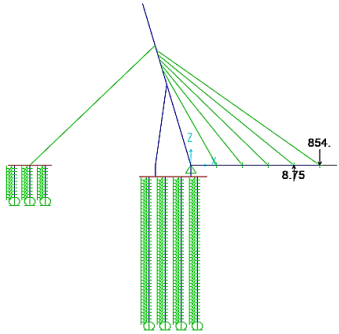

Gambar 5. 43 Permodelan saat Construction Stage 10 (CS 10)

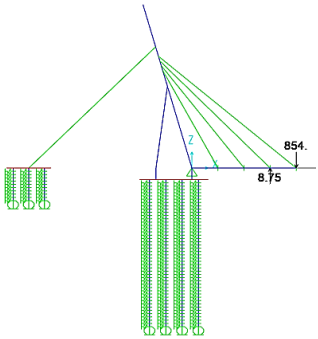

Gambar 5. 44 Permodelan saat Construction Stage 11 (CS 11)

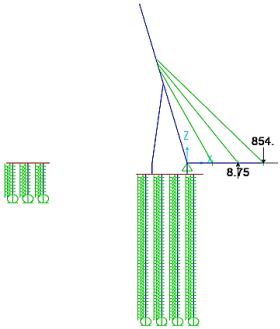

Gambar 5. 45 Permodelan saat Construction Stage 12 (CS 12)

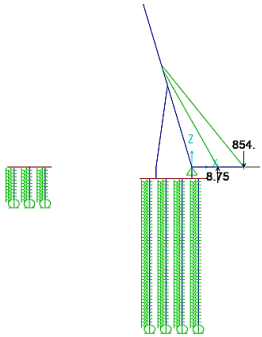

Gambar 5. 46 Permodelan saat Construction Stage 13 (CS 13)

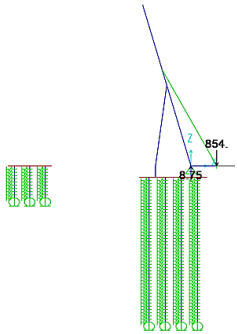

Gambar 5. 47 Permodelan saat Construction Stage 13 (CS 13)

Dari hasil CSI Bridge didapatkan bahwa gaya – gaya yang dihasilkan saat staging analysis tidak menentukan, karena gaya yang diperoleh lebih kecil saat beban layan bekerja.

BAB VI
GELAGAR UTAMA

6.1. Perencanaan Gelagar Utama

Desain gelagar utama jembatan cable-stayed ini 2000.1500.60.60 dengan rusuk pada sisi atas, bawah, kiri dan kanan seperti pada Gambar 6.1

Data perencanaan sebagai berikut :

A	= 0,4616 m^2	ix	= 0,7495 m
H	= 2 m	iy	= 0,5971 m
B	= 1,5 m	Ix	= 0,2593 m^4
hr	= 0,2 m	Iy	= 0,1646 m^4
S	= 0,4 m	Sx	= 0,2218 m^3
tr	= 0,02 m	Sy	= 0,1805 m^3
tw	= 0,06 m	Zx	= 0,2593 m^3
tf	= 0,06 m	Zy	= 0,2194 m^3
E	= 200000 Mpa	h	= 1,88 m
fy	= 410 Mpa	b	= 1,38 m

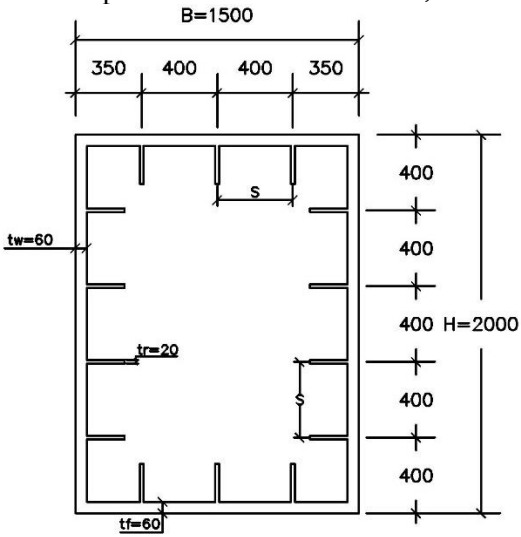

Gambar 6. 1 Detail Gelagar Utama (satuan dalam mm)

6.2. Hasil Analisa Struktur

Analisa struktur gelagar utama dillakukan menggunakan program bantu CSI Bridge sehingga mendapatakan hasil output dengan berbagai kombinasi yang sesuai dengan bab sebelumnya dengan maksud mendapatkan nilai gaya maksimum lihat Tabel 6.1 berikut ini.

Tabel 6. 1 Gaya Dalam pada Gelagar Utama

P	V2	V3	T	M2	M3
KN	KN	KN	KN-m	KN-m	KN-m
52394.96	3030.70	709.98	2604.41	1722.66	20705.22

6.2.1. Kontrol Kemampuan Penampang

- **Analisa Kuat Aksial**

Analisa Batang Tarik

Pn = Ag x fy (Badan Standarisasi Nasional Indonesia, 2015)
= 461600 mm^2 x 410 N/mm^2
= 189256000 N
= 189256 kN

φPn = 0,9 x 189256 kN
= 170330,4 kN

kontrol , Pu < φPn
52394,96 kN < 170330,4 kN **(OK)**

Analisa Batang Tekan

Analisa kelangsingan

<u>Sumbu x</u>

λr $= 5{,}7\sqrt{\frac{E}{fy}} = 5{,}7\sqrt{\frac{200000}{410}} = 125{,}89$

h/tw = 1.88/0.06 = 31,33

h/tw < λr

31,33 < 125.89 (Penampang Kompak)

rx = 749,5 mm

Lx = 8000 mm (jarak antar kabel)

Kx = 1

λx $= \frac{Lx.kx}{rx} = \frac{8000\ x\ 1}{749{,}5} = 10{,}67$

<u>Sumbu y</u>

λy = $1{,}4\sqrt{\frac{E}{fy}}$ = $1{,}4\sqrt{\frac{200000}{410}}$ = 30,92

b/tf = 1,38/0,06 = 23

b/tf < λy

23 < 30,92 (Penampang Kompak)

ry = 597,1 mm

Ly = 4000 mm (jarak gelagar melintang)

ky = 1

λy = $\frac{Ly.ky}{ry} = \frac{4000\ x\ 1}{597{,}1} = 6{,}699$

Karena λy < λx maka dipakai λx = 10,67

Tegangan kritis, fcr ditentukan sebagai berikut :

$\frac{K.L}{r}$ < $4{,}71\sqrt{\frac{E}{fy}}$

10,67 < $4{,}71\sqrt{\frac{200000}{410}}$

Maka Fcr ,

fe = $\frac{\pi^2 E}{\left(\frac{K.L}{r}\right)}$ = 17325.79

Fcr = $\left[0{,}658^{\frac{fy}{fe}}\right].fy$

= $\left[0{,}658^{\frac{410}{17325{,}79}}\right].410$

= 405.96 Mpa

φPn = 0,75 x Fcr x Ag

= 0,75 x 405,96 N/mm^2 x 461600 mm^2

= 168651666.7 N

= 168651,67 kN

Nu < φPn

52394,96 kN < 168651,67 kN **(OK)**

- **Analisa Kuat Geser**

kontrol geser arah X (pada sayap)

Vux = 709,98 kN

Af = 2 x tf x B

= 2 x 60 mm x 1500 mm

= 180000 mm^2

b/tf = 1,38/0,06 = 23

a = S = 400 mm

Kv = $5 + \frac{5}{(a/b)^2}$ (SNI 1729-2015 G2.6)

= $5 + \frac{5}{(400/1380)^2}$

= 64.5

$\frac{b}{tf} < 1{,}1\sqrt{\frac{Kv.E}{fy}}$ (SNI 1729-2015 G2-3)

$23 < 1{,}1\sqrt{\frac{64{,}5x200000}{410}}$

23 < 195 , maka Cv = 1

φVn = 0,9 x 0,6 x fy x Af x Cv

= 0,9 x 0,6 x 410 x 180000 mm^2 x 1

= 33210000 N

= 33210 kN

Vux < φVn

709,98 kN < 33210 kN **(OK)**

Kontrol geser arah Y (pada badan)

Vuy = 3030,7 kN

Ab = 2 x tw x h

= 2 x 60 mm x 1880 mm

= 225600 mm^2

h/tw = 1880/60 = 31,33

a = S = 400 mm

Kv = $5 + \frac{5}{(a/h)^2}$ (SNI 1729-2015 G2.6)

= $5 + \frac{5}{(400/1880)^2}$ = 115,45

$\frac{h}{tw} < 1{,}1\sqrt{\frac{Kv.E}{fy}}$ (SNI 1729-2015 G2-3)

$31{,}33 < 1{,}1\sqrt{\frac{115{,}45x200000}{410}}$

31,33 < 261,04 , maka Cv = 1

φVn = 0,9 x 0,6 x fy x Ab x Cv

= 0,9 x 0,6 x 410 x 225600 mm^2 x 1

= 41623200 N

= 41623,2 kN

Vux < φVn

3030,7 kN < 41623,2 kN **(OK)**

- **Analisa Kuat Lentur**

Untuk memperoleh nilai modulus plastis penampang *steel box girder* 2000.1500.60.60 menggunakan program bantu CSI Bridge sebagai berikut pada Gambar 6.2.

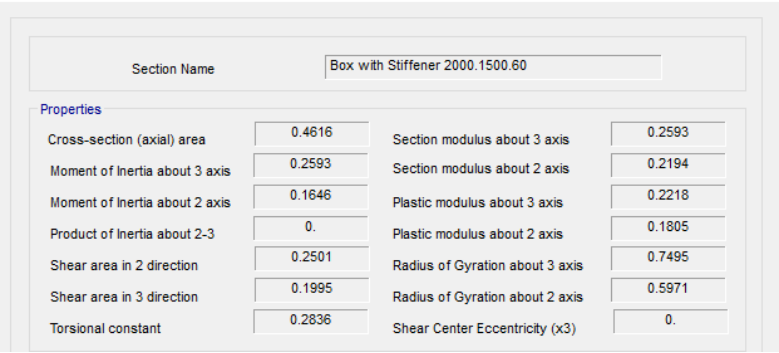

Section Name: Box with Stiffener 2000.1500.60

Properties

Cross-section (axial) area	0.4616	Section modulus about 3 axis	0.2593
Moment of Inertia about 3 axis	0.2593	Section modulus about 2 axis	0.2194
Moment of Inertia about 2 axis	0.1646	Plastic modulus about 3 axis	0.2218
Product of Inertia about 2-3	0.	Plastic modulus about 2 axis	0.1805
Shear area in 2 direction	0.2501	Radius of Gyration about 3 axis	0.7495
Shear area in 3 direction	0.1995	Radius of Gyration about 2 axis	0.5971
Torsional constant	0.2836	Shear Center Eccentricity (x3)	0.

Gambar 6. 2 Penampang Steel Box

Dari analisa menggunakan CSI Bridge didapatkan nilai berikut ini :

Zx = 0,2593 m^3

Zy = 0,2194 m^3

Kontrol tekuk lokal (SNI 1729-2015 Tabel B4.1)

Sayap

$\lambda = \frac{b}{tf}$

$= \frac{1,38}{2x0,06}$

$= 11,5$

$\lambda p = 1,12\sqrt{\frac{E}{fy}}$

$= 1,12\sqrt{\frac{200000}{410}}$

$= 24,74$

$\lambda < \lambda p$ (Penampang Kompak)

Badan

$\lambda = \frac{h}{2tw}$

$= \frac{1,88}{2x60}$

$= 15,67$

$\lambda p = 2,42\sqrt{\frac{E}{fy}}$

$= 2,42\sqrt{\frac{200000}{410}}$

$= 53,45$

$\lambda < \lambda p$ (Penampang Kompak)

Maka *steel box girder* termasuk penampang kompak

Mn = Z . fy

<u>Momen Arah x</u>

Mux = 20705,22 kNm

Mnx = Zx . fy

= 259300000 mm^3 x 410 N/mm^2

= 106313000000 Nmm

= 106313 kNm

φMnx = 0,9 x Mnx

= 0,9 x 106313 kNm

= 95681,7 kNm

Kontrol, Mux < φMnx

20705,22 kNm < 95681,7 kNm **(OK)**

<u>Momen Arah y</u>

Muy = 1722,66 kNm

Mny = Zy . fy

= 219400000 mm^3 x 410 N/mm^2

= 89954000000 Nmm

= 89954 kNm

φMny = 0,9 x Mny

= 0,9 x 89954 kNm

= 80958,6 kNm

Kontrol , Muy < Mny
1722.66 kNm < 80958.6 kNm **(OK)**

- **Kombinasi Lentur dan Aksial**

Kontrol kemapuan penampang yang berupa simetris ganda dengan interaksi lentur dan aksial. (SNI 1729-2015 H1).

Pr = Pu = 52394,96 kN
Pc = φPn = 168651,67 kN
Mrx = Mux = 20705,22 kNm
Mcx = φMnx = 95681,7 kNm
Mry = Muy = 1722,66 kNm
Mcy = φMny = 80958,6 kNm

$$\frac{Pr}{Pc} = \frac{52394{,}96\ \text{kN}}{168651{,}67\ \text{kN}} = 0{,}31 > 0{,}2$$

Maka digunakan persamaan 1 sebagai berikut :

$$\frac{Pr}{Pc} + \frac{8}{9}\left(\frac{Mrx}{Mcx} + \frac{Mry}{Mcy}\right) \leq 1{,}0 \qquad \text{(SNI 1729-2015, H1-1a)}$$

$$\frac{52394{,}96}{168651{,}67} + \frac{8}{9}\left(\frac{20705{,}22}{95681{,}7} + \frac{1722{,}66}{80958{,}6}\right) \leq 1{,}0$$

0,56 < 1,0 **(OK)**

- **Analisa Kuat Torsi**

Kontrol kemampuan torsi untuk penampang persegi berongga

Tu = 2604,41 kNm
= 2604410000 Nmm

$$\frac{h}{tw} < 2{,}45\sqrt{\frac{E}{fy}} \qquad \text{(SNI 1729-2015, H3-3)}$$

$$\frac{1{,}88}{0{,}06} < 2{,}45\sqrt{\frac{200000}{410}}$$

31,11 < 54,11
Maka, Fcr = 0,6 fy
Fcr = 0,6 x 410 N/mm^2
= 246 N/mm^2
C = 2 (B-t)(H-t)t – 4,5(4 - π)t^3
= 2 (1500-60)(2000-60)60 – 4,5(4 - π)60^3
= 334397628,1 mm^3

Tc = 0,9 x Fcr x C
= 0,9 x 246 N/mm^2 x 334397628,1 mm^3
= 49357089902 Nmm
= 49357,09 kNm
Tu < Tc
2604,41 kNm < 49357,09 kNm **(OK)**

6.2.2. Hasil Analisa Struktur saat Kabel Putus

Pada kasus ini diasumsikan satu kabel mengalami putus seperti dapat dilihat pada Gambar 6.3

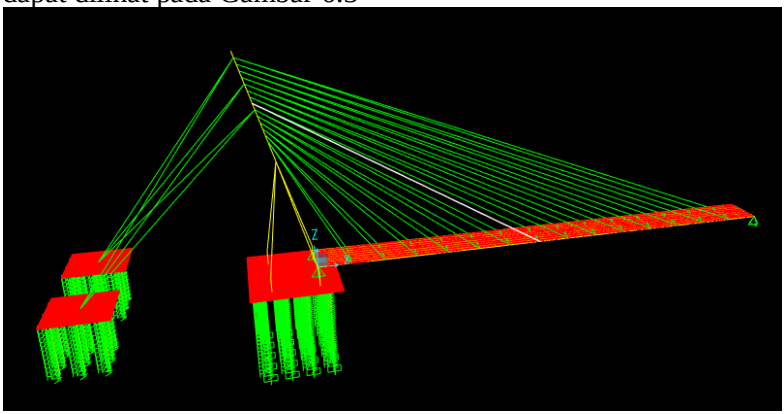

Gambar 6. 3 Asumsi 1 Kabel Putus

Dengan hasil analisa dari program bantu CSI Bridge, analisa struktur didapatkan nilai gaya dalam maksimum dari semua kombinasi.

Tabel 6. 2 Gaya Dalam Gelagar Utama Saat Kabel Putus

P	V2	V3	T	M2	M3
KN	KN	KN	KN-m	KN-m	KN-m
52606.64	3222.65	714.38	2785.91	1733.28	22250.02

6.2.3. Kontrol Kemampuan Penampang saat Kabel Putus

- **Analisa Kuat Aksial**

Analisa Batang Tarik

Pn = Ag x fy
= 461600 mm^2 x 410 N/mm^2
= 189256000 N
= 189256 kN

φPn = 0,9 x 189256 kN
= 170330,4 kN

kontrol , Pu < φPn
52606,64 kN < 170330,4 kN **(OK)**

Analisa Batang Tekan

Analisa kelangsingan

<u>Sumbu x</u>

λr $= 5{,}7\sqrt{\frac{E}{fy}} = 5{,}7\sqrt{\frac{200000}{410}} = 125{,}89$

h/tw = 1.88/0.06 = 31,33

h/tw < λr

31,33 < 125.89 (Penampang Kompak)

rx = 749,5 mm

Lx = 8000 mm (jarak antar kabel)

Kx = 1

λx $= \frac{Lx.kx}{rx} = \frac{8000\ x\ 1}{749{,}5} = 10{,}67$

<u>Sumbu y</u>

λy $= 1{,}4\sqrt{\frac{E}{fy}} = 1{,}4\sqrt{\frac{200000}{410}} = 30{,}92$

b/tf = 1,38/0,06 = 23

b/tf < λy

23 < 30,92 (Penampang Kompak)

ry = 597,1 mm

Ly = 4000 mm (jarak gelagar melintang)

ky = 1

λy $= \frac{Ly.ky}{ry} = \frac{4000\ x\ 1}{597{,}1} = 6{,}699$

Karena λy < λx maka dipakai λx = 10,67
Tegangan kritis, fcr ditentukan sebagai berikut :

$\frac{K.L}{r}$ < 4,71 $\sqrt{\frac{E}{fy}}$

10,67 < 4,71$\sqrt{\frac{200000}{410}}$

Maka Fcr ,

fe = $\frac{\pi^2 E}{\left(\frac{K.L}{r}\right)}$ = 17325,79

Fcr = $\left[0{,}658^{\frac{fy}{fe}}\right].fy$

= $\left[0{,}658^{\frac{410}{17325{,}79}}\right].410$

= 405,96 Mpa

φPn = 0,75 x Fcr x Ag

= 0,75 x 405,96 N/mm^2 x 461600 mm^2

= 168651666,7 N

= 168651,67 kN

Nu < φPn

52606,64 kN < 168651,67 kN **(OK)**

- **Analisa Kuat Geser**

kontrol geser arah X (pada sayap)

Vux = 714,38 kN

Af = 2 x tf x B

= 2 x 60 mm x 1500 mm

= 180000 mm^2

b/tf = 1,38/0,06 = 23

a = S = 400 mm

Kv = 5 + $\frac{5}{(a/b)^2}$ (SNI 1729-2015 G2.6)

= 5 + $\frac{5}{(400/1380)^2}$

= 64,5

$\frac{b}{tf}$ < 1,1$\sqrt{\frac{Kv.E}{fy}}$ (SNI 1729-2015 G2-3)

$23 < 1{,}1\sqrt{\frac{64{,}5x200000}{410}}$

23 < 195 , maka Cv = 1

φVn = 0,9 x 0,6 x fy x Af x Cv

= 0,9 x 0,6 x 410 x 180000 mm^2 x 1

= 33210000 N

= 33210 kN

Vux < φVn

714,38 kN < 33210 kN **(OK)**

Kontrol geser arah Y (pada badan)

Vuy = 3222,65 kN

Ab = 2 x tw x h

= 2 x 60 mm x 1880 mm

= 225600 mm^2

h/tw = 1880/60 = 31,33

a = S = 400 mm

Kv = $5 + \frac{5}{(a/h)^2}$ (SNI 1729-2015 G2.6)

= $5 + \frac{5}{(400/1880)^2}$ = 115,45

$\frac{h}{tw} < 1{,}1\sqrt{\frac{Kv.E}{fy}}$ (SNI 1729-2015 G2-3)

$31{,}33 < 1{,}1\sqrt{\frac{115{,}45x200000}{410}}$

31,33 < 261,04 , maka Cv = 1

φVn = 0,9 x 0,6 x fy x Ab x Cv

= 0,9 x 0,6 x 410 x 225600 mm^2 x 1

= 41623200 N

= 41623,2 kN

Vux < φVn

3222,65 kN < 41623,2 kN **(OK)**

- **Analisa Kuat Lentur**

Kontrol tekuk lokal (SNI 1729-2015 Tabel B4.1)

Sayap

$\lambda = \frac{b}{tf}$

$= \frac{1,38}{2x0,06}$

$= 11,5$

$\lambda p = 1,12\sqrt{\frac{E}{fy}}$

$= 1,12\sqrt{\frac{200000}{410}}$

$= 24,74$

$\lambda < \lambda p$ (Penampang Kompak)

Badan

$\lambda = \frac{h}{2tw}$

$= \frac{1,88}{2x60}$

$= 15,67$

$\lambda p = 2,42\sqrt{\frac{E}{fy}}$

$= 2,42\sqrt{\frac{200000}{410}}$

$= 53,45$

$\lambda < \lambda p$ (Penampang Kompak)

Maka *steel box girder* termasuk penampang kompak

Mn = Z . fy

<u>Momen Arah x</u>

Mux = 22250,02 kNm

Mnx = Zx . fy

= 259300000 mm^3 x 410 N/mm^2

= 106313000000 Nmm

= 106313 kNm

φMnx = 0,9 x Mnx

= 0,9 x 106313 kNm

= 95681,7 kNm

Kontrol, Mux < φMnx

22250,02 kNm < 95681,7 kNm **(OK)**

<u>Momen Arah y</u>

Muy = 1733,28 kNm

Mny = Zy . fy

= 219400000 mm^3 x 410 N/mm^2

= 89954000000 Nmm

= 89954 kNm

φMny = 0,9 x Mny

= 0,9 x 89954 kNm

= 80958,6 kNm

Kontrol , Muy < φMny

1733,28 kNm < 80958,6 kNm **(OK)**

- **Kombinasi Lentur dan Aksial**

Kontrol kemapuan penampang yang berupa simetris ganda dengan interaksi lentur dan aksial. (SNI 1729-2015 H1).

Pr	= Pu	= 52606,64 kN
Pc	= φPn	= 168651,67 kN
Mrx	= Mux	= 22250,02 kNm
Mcx	= φMnx	= 95681,70 kNm
Mry	= Muy	= 1733,28 kNm
Mcy	= φMny	= 80958,60 kNm

$$\frac{Pr}{Pc} = \frac{52394{,}96\ \text{kN}}{168651{,}67\ \text{kN}} = 0{,}31 > 0{,}2$$

Maka digunakan persamaan 1 sebagai berikut :

$$\frac{Pr}{Pc} + \frac{8}{9}\left(\frac{Mrx}{Mcx} + \frac{Mry}{Mcy}\right) \leq 1{,}0 \qquad \text{(SNI 1729-2015, H1-1a)}$$

$$\frac{52606{,}64}{168651{,}67} + \frac{8}{9}\left(\frac{22250{,}02}{95681{,}7} + \frac{1733{,}28}{80958{,}6}\right) \leq 1{,}0$$

0,56 < 1,0 **(OK)**

- **Analisa Kuat Torsi**

Kontrol kemampuan torsi untuk penampang persegi berongga

Tu = 2785,906 kNm

= 2785906000 Nmm

$$\frac{h}{tw} < 2{,}45\sqrt{\frac{E}{fy}} \qquad \text{(SNI 1729-2015, H3-3)}$$

$$\frac{1{,}88}{0{,}06} < 2{,}45\sqrt{\frac{200000}{410}}$$

31,11 < 54,11

Maka, Fcr = 0,6 fy

Fcr = 0,6 x 410 N/mm^2

= 246 N/mm^2

C = 2 (B-t)(H-t)t – 4,5(4 - π)t^3

= 2 (1500-60)(2000-60)60 – 4,5(4 - π)60^3

= 334397628,1 mm^3

Tc = 0,9 x Fcr x C

= 0,9 x 246 N/mm^2 x 334397628,1 mm^3

= 49357089902 Nmm

= 49357,09 kNm

Tu < Tc

2785,906 kNm < 49357,09 kNm **(OK)**

6.3. Sambungan Gelagar Utama

Sambungan gelagar utama berupa sambungan baut dengan pelat baja. Sambungan pada semua elemen gelagar utama dianggap memikul beban yang sama, dengan gaya-gaya dalam yaitu :

Pu = 52606,64 kN

Vux = 714,38 kN

Vuy = 3222,65 kN

Mux = 22250,02 kNm

Muy = 1733,28 kNm

Tu = 2785,91 kNm

Direncanakan :

Diameter baut (db) = 32 mm

fu = 500 Mpa

Ab = 0,25 . π . db^2

= 0,25 . π . 32^2

= 804,25 mm^2

Lubang perlemahan (dp)

dp = db + 1.5 mm

= 32 + 1.5 mm

= 33,5 mm

Pelat penyambung (tp) = 25 mm

BJ = 41

fu = 410 Mpa

fy = 250 Mpa

Kuat nominal 1 baut

Kuat geser (Vd)

r1 = 0,5 (tidak ada ulir pada bidang geser)

m = 2 (dua bidang geser)

φVn = 0,75 x r1 x fub x Ab x m

= 0,75 x 0,5 x 500 N/mm^2 x 804,25 mm^2 x 2

= 301592,9 N

= 301,59 kN

Kuat tumpu (Rd)

φRn = 0,75 x 2,4 x db x tp x fu

= 0,75 x 2,4 x 32 mm x 25 mm x 410 N/mm2

= 590400 N

= 590,4 kN

Dipakai nilai kuat nominal 1 baut

φVn = 301.59 kN

<u>Pelat Badan (samping)</u>

- Syarat jarak antar baut

3db ≤ S ≤ 15 . tp atau 200 mm

3 (32 mm) ≤ S ≤ 15 (25 mm) atau 200 mm

96 mm ≤ S ≤ 375 mm atau 200 mm

Dipakai nilai S = 150 mm

- Syarat jarak baut ke tepi pelat

1,5db ≤ S ≤ 12. tp atau 150 mm

1,5(32mm) ≤ S ≤ 12 (25 mm) atau 150 mm

48 mm ≤ S ≤ 300 mm atau 150 mm

Dipakai nilai S = 50 mm

<u>Pelat Sayap (atas)</u>

- Syarat jarak antar baut

3db ≤ S ≤ 15 . tp atau 200 mm

3 (32 mm) ≤ S ≤ 15 (25 mm) atau 200 mm

96 mm ≤ S ≤ 375 mm atau 200 mm

Dipakai nilai S = 120 mm

- Syarat jarak baut ke tepi pelat

1,5db ≤ S ≤ 12. tp atau 150 mm

1,5(32mm) $\leq S \leq$ 12 (25 mm) atau 150 mm
48 mm $\leq S \leq$ 300 mm atau 150 mm
Dipakai nilai S = 50 mm

6.3.1. Sambungan Pelat Sayap

Untuk menghitung jumlah baut pada pelat sayap penampang *steel box*, terlebih dahulu dicari gaya-gaya apa saja yang akan ditahan oleh pelat sayap penampang box, seperti berikut ini:

Vux = 714,38 kN

$\frac{Mux}{B} = \frac{22250{,}02\ kNm}{1{,}5\ m}$ = 14833,34 kN

Pux = Pu $\left(\frac{B}{2(B+H)}\right)$ = 52606,64 $\left(\frac{1{,}5}{2(1{,}5+2)}\right)$ = 11272,85 kN

T = $\left(\frac{Tu}{H}\right)\left(\frac{B}{B+H}\right) = \left(\frac{2785{,}91}{2}\right)\left(\frac{1{,}5}{1{,}5+2}\right)$ = 596,98 kN

Resultan gaya

Rs = $\sqrt{(Vux+T)^2 + \left(Pux + \frac{Mux}{B}\right)^2}$

= $\sqrt{(714{,}38 + 596{,}98)^2 + (11272{,}85 + 14833{,}34)^2}$

= 26139,11 kN

n baut = Rs/φVn

= 26139,11 kN/301,59 kN

= 86,7 buah ≈ 88 buah

6.3.2. Sambungan Pelat Badan

Untuk menghitung jumlah baut pada pelat badan penampang *steel box*, terlebih dahulu dicari gaya-gaya apa saja yang akan ditahan oleh pelat badan penampang box, seperti berikut ini:

Vuy = 3222,65 kN

$\frac{Muy}{B} = \frac{1733{,}28\ kNm}{1{,}5\ m}$ = 1155,52 kN

Puy = Pu $\left(\frac{H}{2(B+H)}\right)$ = 52606,64 $\left(\frac{2}{2(1{,}5+2)}\right)$ = 15030,47 kN

T = $\left(\frac{Tu}{H}\right)\left(\frac{H}{B+H}\right) = \left(\frac{2785{,}91}{2}\right)\left(\frac{2}{1{,}5+2}\right)$ = 795,97 kN

Resultan gaya

Rs $= \sqrt{(Vuy + T)^2 + \left(Puy + \frac{Muy}{B}\right)^2}$

$= \sqrt{(3222{,}65 + 795{,}97)^2 + (15030{,}47 + 1155{,}52)^2}$

= 16677,4 kN

n baut = Rs/φVn

= 16677,4 kN/301,59 kN

= 55,3 buah ≈ 60 buah

Sebagai ilustrasi sambungan pada gelagar utama dapat dilihat pada gambar berikut:

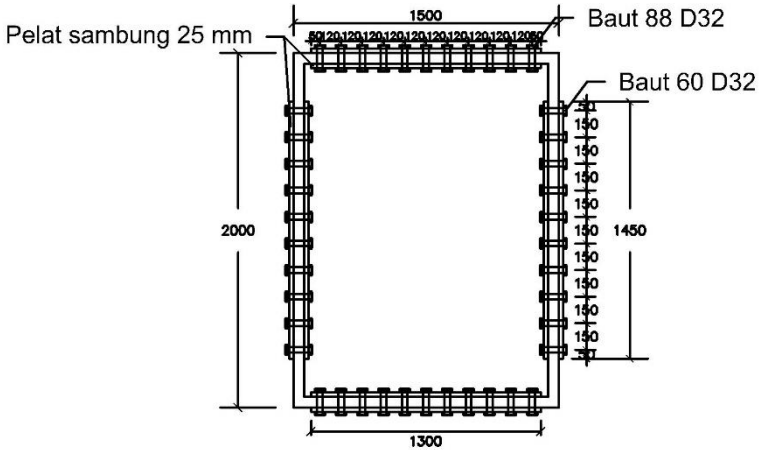

Gambar 6. 4 Tampak Melintang Sambungan Box

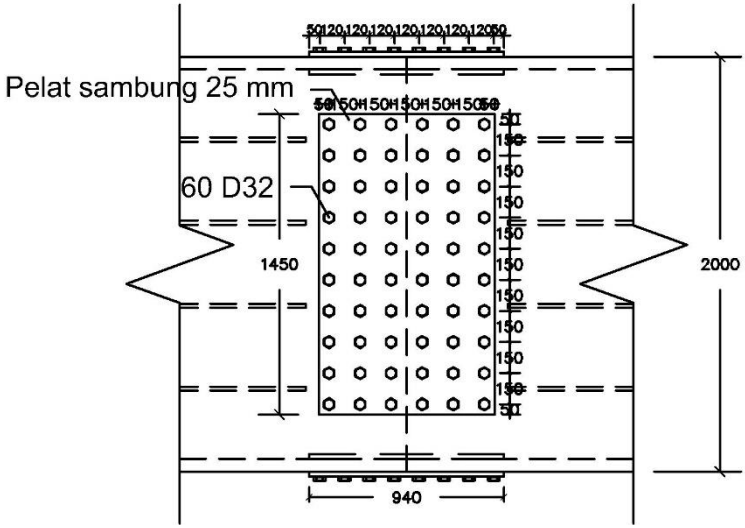

Gambar 6. 5 Sambungan Gelagar Utama pada Badan

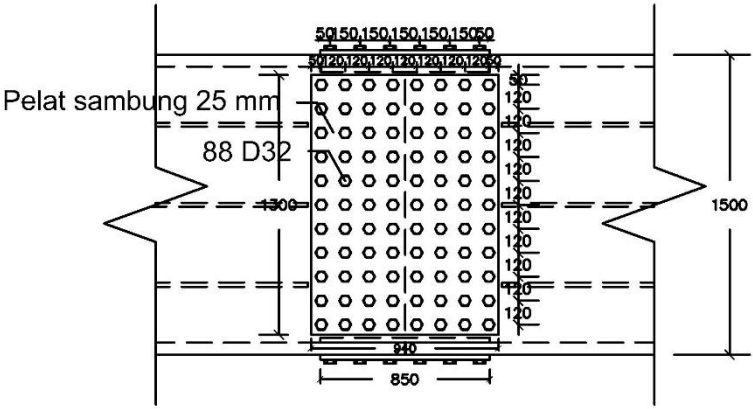

Gambar 6. 6 Sambungan Gelagar Utama pada Sayap

BAB VII
STRUKTUR PYLON

Struktur pylon berfungsi memikul beban yang terjadi pada lantai kendaraan, baik berupa beban hidup maupun beban mati, beban dari lantai kendaraan disalurkan melalui kabel ke pylon untuk kemudian ditransfer ke pondasi. Berikut adalah bentuk penampang pylon yang digunakan. Dimana penampang pylon dibagi menjadi 2 yaitu, pylon atas dan pylon bawah. Untuk lebih jelasnya lihat Gambar 7.1.

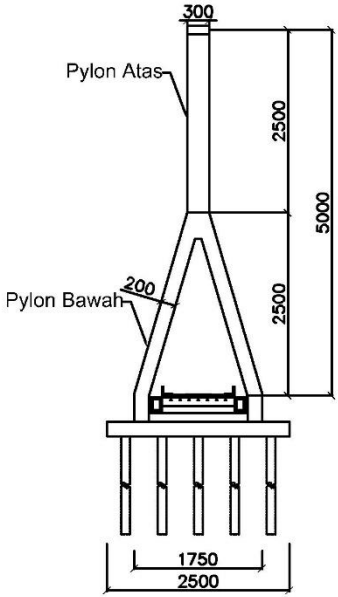

Gambar 7. 1 Penampang Pylon (satuan dalam cm)

7.1. Spesifikasi Material dan Dimensi Pylon

Berikut adalah spesifikasi material dari penampang kolom yang digunakan:

Mutu Beton (fc') = 50 Mpa
Mutu Tulangan (fy) = 420 Mpa

Modulus Elastisitas Beton (Ec) $= 4700\sqrt{fc'}$
$= 4700\sqrt{50}$
$= 33234{,}02$ Mpa
Modulue Elastisitas Baja (Es) = 200000 Mpa
Dimensi Pylon Atas
B_1 = 3 m
H_1 = 4 m

Dimensi Pylon Bawah
B_2 = 2 m
H_2 = 4 m
Untuk lebih jelasnya lihat Gambar 7.2 .

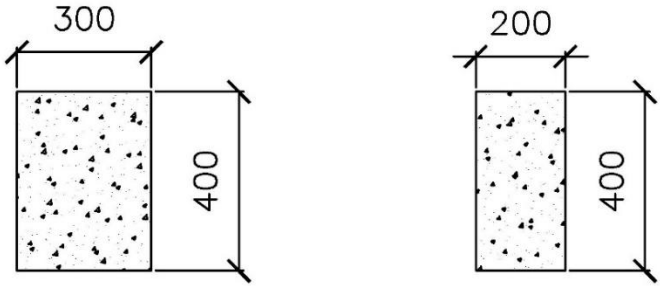

Gambar 7. 2 Pylon Atas(kiri), Pylon Bawah(kanan)

7.1.1. Kelangsingan Pylon

Faktor panjang tekuk ditentukan berdasarkan asumsi bahwa pylon merupakan struktur jepit-bebas, sehingga nilai K= 2,2 berdasarkan RSNI T-12-2004. Gambar 5.7-1.
Tinggi pylon, L_1 = 25 m
L_2 = 25 m
Faktor reduksi momen inersia = 0,7 (Pasal 5.7.4.2)

<u>Pylon Atas</u>
Luas penampang $Ag_1 = B_1.H_1 = 3 \times 4 = 12\ m^2$
Momen Inersia pylon,
$Ix_1 = 0{,}7\ \frac{bh^3}{12} = 0{,}7\ \frac{3x4^3}{12} = 11{,}2\ m^4$
$Iy_1 = 0{,}7\ \frac{hb^3}{12} = 0{,}7\ \frac{4x3^3}{12} = 6{,}3\ m^4$

Section Name	PYLON TOP		
Properties			
Cross-section (axial) area	12.	Section modulus about 3 axis	8.
Moment of Inertia about 3 axis	16.	Section modulus about 2 axis	6.
Moment of Inertia about 2 axis	9.	Plastic modulus about 3 axis	12.
Product of Inertia about 2-3	0.	Plastic modulus about 2 axis	9.
Shear area in 2 direction	10.	Radius of Gyration about 3 axis	1.1547
Shear area in 3 direction	10.	Radius of Gyration about 2 axis	0.866
Torsional constant	19.4385	Shear Center Eccentricity (x3)	0.

Gambar 7. 3 Properties Pylon Atas

Sx = 8 m^3 ix = 1,1547 m
Sy = 6 m^3 iy = 0,866 m
Zx = 12 m^3 Zy = 9 m^3

Kelangsingan terhadap sumbu x :

$$\frac{KL}{rx} = \frac{2.2\ x\ 25}{1.1547} = 47{,}63 > 22 \text{ (Kolom Langsing)}$$

Kelangsingan terhadap sumbu y :

$$\frac{KL}{ry} = \frac{2.2\ x\ 25}{0.866} = 63{,}51 > 22 \text{ (Kolom Langsing)}$$

<u>Pylon Bawah</u>

Luas penampang $Ag_2 = B_2.H_2 = 2 \times 4 = 8\ m^2$

$$Ix_2 = 0{,}7\ \frac{bh^3}{12} = 0{,}7\ \frac{2x4^3}{12} = 7{,}467\ m^4$$

$$Iy_2 = 0{,}7\ \frac{hb^3}{12} = 0{,}7\ \frac{4x2^3}{12} = 1{,}867\ m^4$$

Section Name	PYLON BOT		
Properties			
Cross-section (axial) area	8.	Section modulus about 3 axis	5.3333
Moment of Inertia about 3 axis	10.6667	Section modulus about 2 axis	2.6667
Moment of Inertia about 2 axis	2.6667	Plastic modulus about 3 axis	8.
Product of Inertia about 2-3	0.	Plastic modulus about 2 axis	4.
Shear area in 2 direction	6.6667	Radius of Gyration about 3 axis	1.1547
Shear area in 3 direction	6.6667	Radius of Gyration about 2 axis	0.5774
Torsional constant	7.3242	Shear Center Eccentricity (x3)	0.

Gambar 7. 4 Properties Pylon Bawah

Sx	= 5,333 m^3	ix	= 1,1547 m
Sy	= 2,667 m^3	iy	= 0,5774 m
Zx	= 8 m^3	Zy	= 4 m^3

Kelangsingan terhadap sumbu x :

$\frac{KL}{rx} = \frac{2.2\ x\ 25}{1.1547}$ = 47.63 > 22 (Kolom Langsing)

Kelangsingan terhadap sumbu y :

$\frac{KL}{ry} = \frac{2.2\ x\ 25}{0.5774}$ = 95.25 > 22 (Kolom Langsing)

7.2. Perencanaan Pylon Atas

Gaya dalam yang digunakan dengan nilai maksimum

Pu	= 78455,72 kN	Tu	= 89,23 kNm
Vux	= 230,11 kN	Mux	= 160505,38 kNm
Vuy	= 13470,05 kN	Muy	= 2374,86 kNm

7.2.1. Perbesaran Momen

Q $= \frac{\sum Pu.\Delta o}{Vu.Ix}$ < 0,05 (RSNI T-12-2004 ps 5.7.6)

∑Pu = beban vertikal terfaktor

Δo = simpangan relative

= 0,0377 m

Q $= \frac{78455,72\ x\ 0,0377}{13470,05x11,2}$

= 0,0196 < 0,05 (Kolom Tak Bergoyang)

Prosedur perbesaran momen kolom tak bergoyang

EI $= \frac{0,4Ec.I}{1+\beta dns}$

βdns $= \frac{Aksial\ Beban\ Tetap}{Aksial\ Kombinasi\ Terbesar}$

$= \frac{54630.596}{78455.72}$

= 0,7

EI $= \frac{0,4x33234018,72x11,2}{1+0,7}$

= 87771210,42 kNm^2

Pc $= \frac{\pi^2 EI}{(KL)^2} = \frac{\pi^2 87771210.42}{(1x25)^2}$ = 1386027,399 kN

Faktor perbesaran momen

Cm = 1,0

δns $= \frac{Cm}{1-\frac{Pu}{0,75Pc}} \geq 1,0$

$= \frac{1}{1-\frac{78455.72}{0,75x1386027.399}} \geq 1,0$

= 1,082 ≥ 1,0 **(OK)**

Momen desain

Mc = δns x M_2 (RSNI T-12-2004 ps 5.7.6.1)

M_2 tidak boleh diambil lebih kecil dari :

$M_{2,}$ min = Pu (15+0,03h)

= 78455720 N (15+0,03x 4000 mm)

= 10591522470 Nmm

= 10591,52 kNm < M2

Maka dipakai M2 dari hasil permodelan

Mcx = δns x Mx

= 1,082 x 160505,38 kNm

= 173608,11 kNm

Mcy = δns x My

= 1,082 x 2374,86 kNm

= 2568,73 kNm

7.2.2. Perhitungan Tulangan Longitudinal

Perencanaan untuk tulangan longitudinal menggunakan tulangan D43 dan untuk tulangan tranversal menggunakan tulangan D16 dimana mutu tulangan menggunakan fy 420 MPa. Untuk kebutuhan tulangan longitudinal direncanakan dan dianalisa menggunakan program bantu spColumn. Lebih lanjutnya dapat dilihat pada Gambar 7.5 sebagai berikut ini.

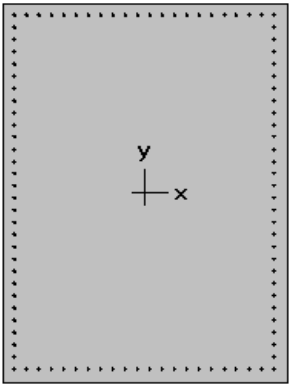

Gambar 7. 5 Permodelan *Pylon* Atas Pada Spcolumn

Hasil Permodelan :

<u>Material</u>

fc’ = 50 Mpa

Ec = 33234,02 Mpa

fc = 42,5 Mpa

β1 = 0,687

<u>Reinforcement</u>

Diameter Longitudinal (Dl) = 43 mm

Diameter Transversal (dt) = 16 mm

Jumlah Tulangan = 100

Rasio , ρ = 1,21%

As = 145200 mm^2

<u>Kontrol jarak antar tulangan :</u>

Arah x

Jumlah tulangan dalam arah x = 22

S $= \frac{b-2cover-2Dt-nDl}{n-1}$

$= \frac{3000-2x100-2x16-22x43}{22-1}$

= 86,762 > 40 **(OK)**

Arah y

Jumlah tulangan dalam arah x = 30

S $= \frac{H-2cover-2Dt-nDl}{n-1}$

$= \frac{4000-2x100-2x16-30x43}{30-1}$

= 85,45 > 40 **(OK)**

<u>Kontrol rasio tulangan :</u>

Berdasarkan SNI T-12-2004 Pasal 5.7.8.1 disyaratkan rasio tulangan longitudinal kolom tidak boleh kurang dari 0,01Ag dan tidak boleh melebihi 0,08 Ag.

Rasio tulangan berdasarkan perhitungan, ρ= 0,0121

0,01 < ρ = 0,0121 < 0,08 **(OK)**

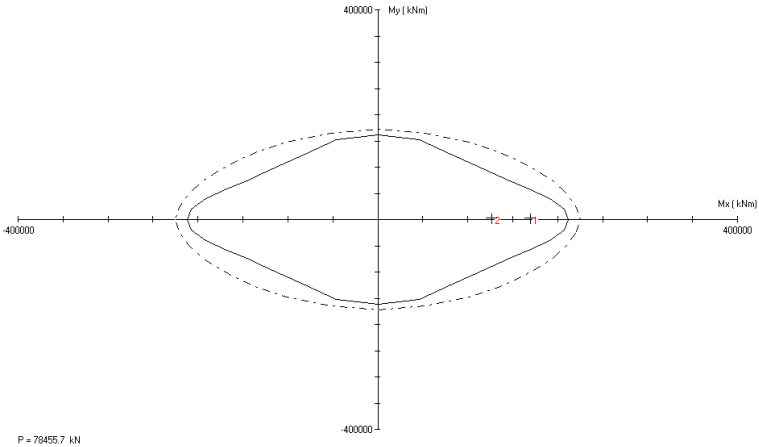

Gambar 7. 6 Diagram Interaksi Mx-My Pylon Atas Spcolumn

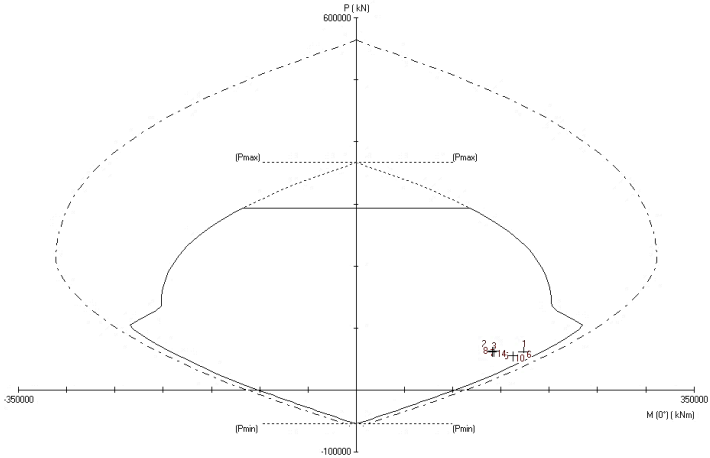

Gambar 7. 7 Diagram Interaksi P-M Pylon Atas spColumn

Dari kedua diagram interaksi di atas dapat dilihat bahwa gaya dalam maksimum yang bekerja pada pylon masih di dalam zona aman sehingga disimpulkan bahwa penampang dengan penulangan longitudinal yang telah didesain memenuhi persyaratan.

7.2.3. Perhitungan Tulangan Transversal

Gaya geser Maksimum desain

Vy	= 13470047 N	fc’	= 50 Mpa
Vx	= 230112 N	fy	= 420 Mpa
Tu	= 89230800 Nmm	Dt	= 16 mm
Nu	= 78455722 N		

Menghitung tinggi efektif

dy = H – 2xcover – Dt – ½ Dl
= 4000 – 2x100 – 16 – ½ 43
= 3762,5 mm

dx = B – 2xcover – Dt – ½ Dl
= 3000 – 2x100 – 16 – ½ 43
= 2762,5 mm

<u>Tinjauan Geser arah Y</u>

Vc $= \left(1 + \frac{Nu}{14Ag}\right)\frac{\sqrt{fc'}}{6}.b.d$

$= \left(1 + \frac{78455722}{14x12x10^6}\right)\frac{\sqrt{50}}{6}x3000x3762.5$

= 19514666.74 N

φVc = 0,7xVc

= 0,7 x 19514666.74 N

= 13660266.72 N

0,5φVc = 0,5 x 13660266.72 N

= 6830133,359 N

Vu < 0,5φVc

3470047 N > 6830133,359 N **(NOT OK)**

Maka diperlukan tulangan geser

0,5φVc < Vu < φVc

6830133,359 N < 13470047 N < 13660266,72 N

Karena 0,5φVc < Vu < φVc maka diperlukan tulangan geser minimum

Vu < φVn

Vn = Vc + Vs

Vu < φ(Vc +Vs)

Av_{min} $= \frac{1}{3}\frac{bw.s}{fy}$

Vs $= \frac{Av.fy.dy}{s}$

$= \frac{\left(\frac{1bw.s}{3\ fy}\right).fy.dy}{s} = \frac{1}{3}\ bw.dy$

$= \frac{1}{3}\ x\ 3000\ x.3762{,}5$

= 3762500 N

Vs $= \frac{2}{3}\sqrt{fc'}.bw.d$

$= \frac{2}{3}\sqrt{50}\ x\ 3000\ x\ 3762{,}5$

= 53209785,28 N

$Vs = \frac{Av.fy.dy}{s}$ < Vs = $\frac{2}{3}\sqrt{fc'}.bw.d$

3762500 N < 53209785,28 N **(OK)**

Vu < φ(Vc +Vs)

Vu/φ < Vc + Vs

13470047 N/0,7 < 19514666,74 N + 3762500 N

19242924,29 N < 23277166,74 N **(OK)**

Dipakai 4D16

Av pakai = 4 x ¼ x π x D^2

= 4 x ¼ x π x 16^2

= 804,25 mm^2

S = $\frac{Avpakai\ x\ fy\ x\ dy}{Vs}$

= $\frac{804,25\ x\ 420\ x\ 3762,5}{3762500}$

= 338 mm

Digunakan S = 300 mm

Av_{min} = $\frac{1}{3}\frac{bw.s}{fy}$ = $\frac{1}{3}\frac{3000\ x\ 300}{420}$ = 714.29 mm^2

kontrol , Av_{min} < Av pakai

714.29 mm^2 < 804,25 mm^2 **(OK)**

<u>Tinjauan Geser arah X</u>

Vc = $\left(1+\frac{Nu}{14Ag}\right)\frac{\sqrt{fc'}}{6}.b.d$

= $\left(1+\frac{78455722}{14x12x10^6}\right)\frac{\sqrt{50}}{6}x4000x2762,5$

= 19104059,13 N

φVc = 0,7xVc

= 0,7 x 19104059,13 N

= 13372841,39 N

0,5φVc = 0,5 x 13372841,39 N

= 6686420,697 N

Vu < 0,5φVc

230112 N < 6686420,697 N **(OK)**

Maka tidak diperlukan tulangan geser namun tetap dipasang tulangan geser minimum.

Vu < φVn
Vn = Vc + Vs
Vu < φ(Vc +Vs)

Av_{min} $= \frac{1}{3}\frac{bw.s}{fy}$

Vs $= \frac{Av.fy.dy}{s}$

$= \frac{\left(\frac{1}{3}\frac{bw.s}{fy}\right).fy.dy}{s} = \frac{1}{3}\ bw.dy$

$= \frac{1}{3}\ x\ 4000\ x.2762{,}5$

= 3683333 N

Vs $= \frac{2}{3}\sqrt{fc'}.bw.d$

$= \frac{2}{3}\sqrt{50}\ x\ 4000\ x\ 2762{,}5$

= 52090200 N

$Vs = \frac{Av.fy.dy}{s}$ < Vs = $\frac{2}{3}\sqrt{fc'}.bw.d$

3683333 N < 52090200 N **(OK)**

Vu < φ(Vc +Vs)

Vu/φ < Vc + Vs

230112 N /0,7 < 19104059,13 N + 3683333 N

328731,43 N < 22787392,5 N **(OK)**

Dipakai 5D16

Av pakai = 5 x ¼ x π x D^2

= 5 x ¼ x π x 16^2

= 1005,31 mm^2

S $= \frac{Avpakai\ x\ fy\ x\ dy}{Vs}$

$= \frac{1005{,}31\ x\ 420\ x\ 2762{,}5}{3683333}$

= 317 mm

Digunakan S = 300 mm

Av_{min} $= \frac{1}{3}\frac{bw.s}{fy} = \frac{1}{3}\frac{4000\ x\ 300}{420} =$ 952,38 mm^2

kontrol , Av_{min} < Av pakai

952,38 mm^2 < 1005,31 mm^2 **(OK)**

7.2.4. Penulangan Torsi

Pengaruh torsi boleh diabaikan bila persamaan berikut terpenuhi.

Tu $< \varphi\ 0{,}083\sqrt{fc'}.\left(\frac{Acp^2}{Pcp}\right)$

Tu = 89230800 Nmm

Acp = 12000000 mm^2

Pcp = 2 (B+H)

= 2(3000+4000)

= 14000 mm

$\varphi\ 0{,}083\sqrt{fc'}.\left(\frac{Acp^2}{Pcp}\right)$ $= 0.75 \text{ x } 0{,}083\sqrt{50}.\left(\frac{12000000^2}{14000}\right)$

= 4527503705 Nmm

Tu $< \varphi\ 0{,}083\sqrt{fc'}.\left(\frac{Acp^2}{Pcp}\right)$

89230800 Nmm < 4527503705 Nmm **(Torsi dapat diabaikan)**

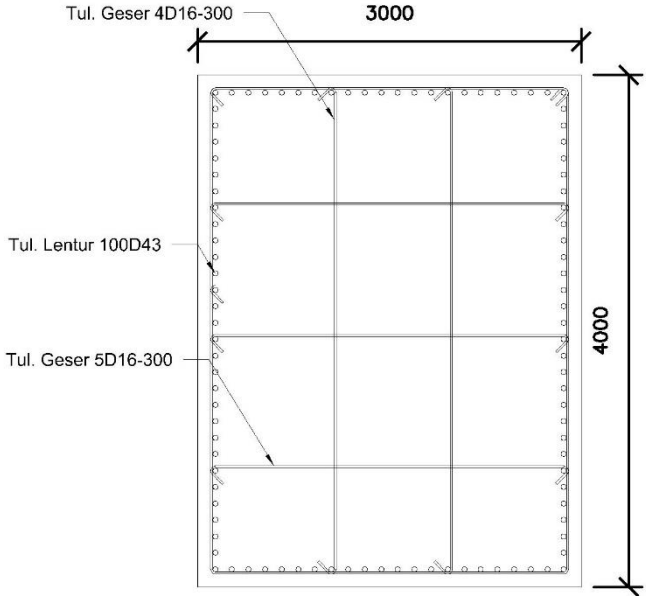

Gambar 7. 8 Penulangan *Pylon* Atas

7.3. Perencanaan Pylon Bawah

Gaya dalam yang digunakan dengan nilai maksimum

Pu	= 37473,29 kN	Tu	= 3176,10 kNm
Vux	= 1356,71 kN	Mux	= 43844,15 kNm
Vuy	= 2477,32 kN	Muy	= 12315,30 kNm

7.3.1. Perbesaran Momen

Q $= \frac{\sum Pu.\Delta o}{Vu.Ix} < 0{,}05$ (RSNI T-12-2004 ps 5.7.6)

∑Pu = beban vertikal terfaktor

Δo = simpangan relative

= 0,00897 m

Q $= \frac{37473{,}29\ x\ 0{,}00897}{2477{,}32 \text{ x } 7{,}467}$

= 0,0182 < 0,05 (Kolom Tak Bergoyang)

Prosedur perbesaran momen kolom tak bergoyang

EI $= \frac{0{,}4Ec.I}{1+\beta dns}$

βdns $= \frac{Aksial\ Beban\ Tetap}{Aksial\ Kombinasi\ Terbesar}$

$= \frac{23209.651}{37473.29}$

= 0,6

EI $= \frac{0{,}4x33234018{,}72x7{,}467}{1+0{,}6}$

= 61296885,36 kNm^2

Pc $= \frac{\pi^2 EI}{(KL)^2} = \frac{\pi^2 61296885{,}36}{(1x25)^2}$ = 967961,615 kN

Faktor perbesaran momen

Cm = 1,0

δns $= \frac{Cm}{1-\frac{Pu}{0{,}75Pc}} \geq 1{,}0$

$= \frac{1}{1-\frac{37473.29}{0{,}75x967961{,}615}} \geq 1{,}0$

= 1,054 ≥ 1,0 **(OK)**

Momen desain

Mc = δns x M_2 (RSNI T-12-2004 ps 5.7.6.1)

M_2 tidak boleh diambil lebih kecil dari :

$M_{2,}$ min = Pu (15+0,03h)

= 37473290 N (15+0,03x 4000 mm)

= 5058894690 Nmm

= 5058,89 kNm < M2

Maka dipakai M2 dari hasil permodelan

Mcx = δns x Mx

= 1,082 x 43844,15 kNm

= 46230,48 kNm

Mcy = δns x My

= 1,082 x 12315,30 kNm

= 12985,587 kNm

7.3.2. Perhitungan Tulangan Longitudinal

Perencanaan untuk tulangan longitudinal menggunakan tulangan D43 dan untuk tulangan tranversal menggunakan tulangan D16 dimana mutu tulangan menggunakan fy 420 MPa. Untuk kebutuhan tulangan longitudinal direncanakan dan dianalisa menggunakan program bantu spColumn. Lebih lanjutnya dapat dilihat pada Gambar 7.9 sebagai berikut ini.

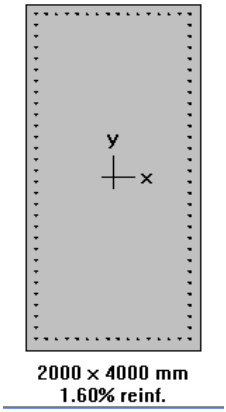

Gambar 7. 9 Permodelan *Pylon* Bawah Pada Spcolumn

Hasil Permodelan :

Material

fc' = 50 Mpa

Ec = 33234,02 Mpa

fc = 42,5 Mpa

β1 = 0,687

Reinforcement

Diameter Longitudinal (Dl) = 43 mm

Diameter Transversal (dt) = 16 mm

Jumlah Tulangan = 88

Rasio , ρ = 1,6%

As = 127776 mm^2

Kontrol jarak antar tulangan :

Arah x

Jumlah tulangan dalam arah x = 16

$$S = \frac{b-2cover-2Dt-nDl}{n-1}$$

$$= \frac{3000-2x100-2x16-16x43}{22-1}$$

= 72 > 40 **(OK)**

Arah y

Jumlah tulangan dalam arah x = 30

$$S = \frac{H-2cover-2Dt-nDl}{n-1}$$

$$= \frac{4000-2x100-2x16-30x43}{30-1}$$

= 85,45 > 40 **(OK)**

Kontrol rasio tulangan :

Berdasarkan SNI T-12-2004 Pasal 5.7.8.1 disyaratkan rasio tulangan longitudinal kolom tidak boleh kurang dari 0,01Ag dan tidak boleh melebihi 0,08 Ag.

Rasio tulangan berdasarkan perhitungan, ρ= 0,016

0,01 < ρ = 0,016 < 0,08 **(OK)**

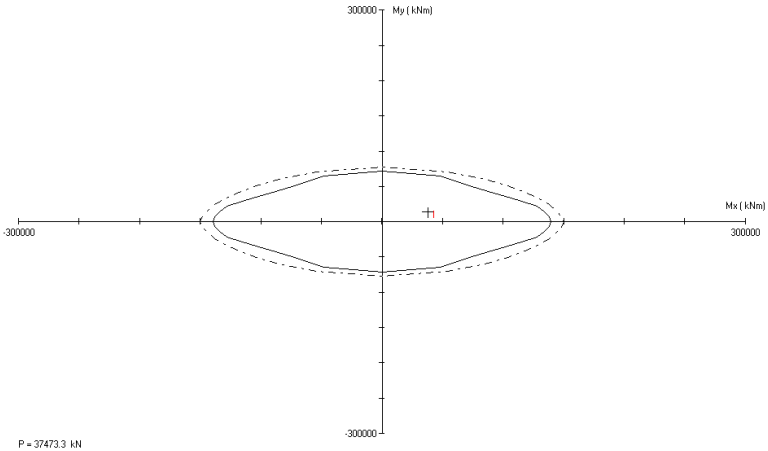

Gambar 7. 10 Diagram Interaksi Mx-My *Pylon* Bawah Spcolumn

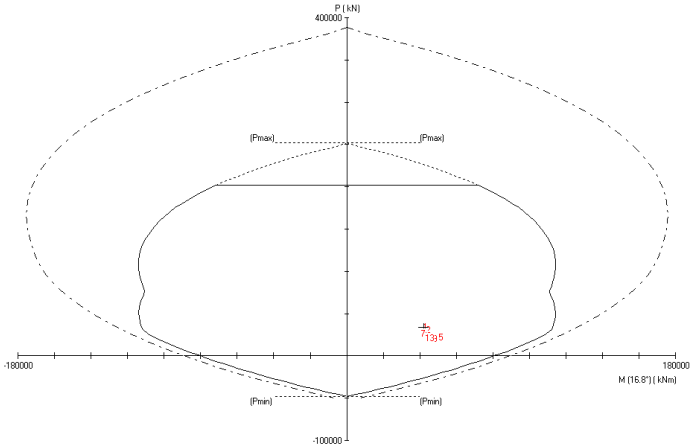

Gambar 7. 11 Diagram Interaksi P-M *Pylon* Bawah spColumn

Dari kedua diagram interaksi di atas dapat dilihat bahwa gaya dalam maksimum yang bekerja pada pylon masih di dalam zona aman sehingga disimpulkan bahwa penampang dengan penulangan longitudinal yang telah didesain memenuhi persyaratan.

7.3.3. Perhitungan Tulangan Transversal

Gaya geser Maksimum desain

Vy	= 2477317 N	fc'	= 50 Mpa
Vx	= 1356706 N	fy	= 420 Mpa
Tu	= 3176103000 Nmm	Dt	= 16 mm
Nu	= 37473294 N		

Menghitung tinggi efektif

dy = H – 2xcover – Dt – ½ Dl
= 4000 – 2x100 – 16 – ½ 43
= 3762,5 mm

dx = B – 2xcover – Dt – ½ Dl
= 2000 – 2x100 – 16 – ½ 43
= 1762,5 mm

<u>Tinjauan Geser arah Y</u>

Vc $= \left(1 + \frac{Nu}{14Ag}\right)\frac{\sqrt{fc'}}{6}.b.d$

$= \left(1 + \frac{37473294}{14x8x10^6}\right)\frac{\sqrt{50}}{6}x2000x3762{,}5$

= 11835478,99 N

φVc = 0,7xVc
= 0,7 x 11835478,99 N
= 8284835,291 N

0,5φVc = 0,5 x 8284835,291 N
= 4142417,646 N

Vu < 0,5φVc

2477317 N < 4142417,646 N **(OK)**

Maka tidak diperlukan tulangan geser namun tetap dipasang tulangan geser minimum.

Vu < φVn
Vn = Vc + Vs
Vu < φ(Vc +Vs)

$Av_{min} = \frac{1}{3}\frac{bw.s}{fy}$

$Vs = \frac{Av.fy.dy}{s}$

$= \frac{\left(\frac{1}{3}\frac{bw.s}{fy}\right).fy.dy}{s} = \frac{1}{3}\ bw.dy$

$= \frac{1}{3}\ x\ 2000\ x.3762{,}5$

= 2508333 N

Vs $= \frac{2}{3}\sqrt{fc'}.bw.d$

$= \frac{2}{3}\sqrt{50}\ x\ 2000\ x\ 3762{,}5$

=35473190 N

$Vs = \frac{Av.fy.dy}{s}$ < Vs = $\frac{2}{3}\sqrt{fc'}.bw.d$

2508333 N < 35473190 N **(OK)**

Vu < φ(Vc +Vs)

Vu/φ < Vc + Vs

2477317 N /0,7 < 11835478,99 N + 2508333 N

3539024,29 N < 23277166,74 N **(OK)**

Dipakai 3D16

Av pakai = 3 x ¼ x π x D^2

= 3 x ¼ x π x 16^2

= 603,19 mm^2

S $= \frac{Avpakai\ x\ fy\ x\ dy}{Vs}$

$= \frac{603{,}19\ \ x\ 420\ x\ 3762{,}5}{2508333}$

= 380 mm

Digunakan S = 300 mm

Av_{min} $= \frac{1}{3}\frac{bw.s}{fy} = \frac{1}{3}\frac{2000\ x\ 300}{420} =$ 476,19 mm^2

kontrol , Av_{min} < Av pakai

603,19 mm^2 < 476,19 mm^2 **(OK)**

<u>Tinjauan Geser arah X</u>

Vc $= \left(1 + \frac{Nu}{14Ag}\right)\frac{\sqrt{fc'}}{6}.b.d$

$= \left(1 + \frac{37473294}{14x8x10^6}\right)\frac{\sqrt{50}}{6}x4000x1762{,}5$

= 11088388,95 N

φVc = 0,7xVc

= 0,7 x 11088388,95 N

= 7761872,266 N

0,5φVc = 0,5 x 7761872,266 N

= 3880936,133 N

Vu	< 0,5φVc	
1356706 N	< 3880936,133 N	**(OK)**

Maka tidak diperlukan tulangan geser namun tetap dipasang tulangan geser minimum.

Vu < φVn

Vn = Vc + Vs

Vu < φ(Vc +Vs)

Av_{min} $= \frac{1}{3}\frac{bw.s}{fy}$

Vs $= \frac{Av.fy.dy}{s}$

$= \frac{\left(\frac{1bw.s}{3\ fy}\right).fy.dy}{s} = \frac{1}{3}\ bw.dy$

$= \frac{1}{3}\ x\ 4000\ x.1762{,}5$

= 2350000 N

Vs $= \frac{2}{3}\sqrt{fc'}.bw.d$

$= \frac{2}{3}\sqrt{50}\ x\ 4000\ x\ 1762{,}5$

= 33234019 N

$Vs = \frac{Av.fy.dy}{s}$	<	Vs = $\frac{2}{3}\sqrt{fc'}.bw.d$	
2350000 N	<	33234019 N	**(OK)**

Vu < φ(Vc +Vs)
Vu/φ < Vc + Vs
1356706 N /0,7 < 11088388,95 N + 2350000 N
1938151,43 N < 13438388,95 N **(OK)**

Dipakai 5D16
Av pakai = 5 x ¼ x π x D^2
= 5 x ¼ x π x 16^2
= 1005,31 mm^2

$$S = \frac{Avpakai\ x\ fy\ x\ dy}{Vs}$$
$$= \frac{1005{,}31\ x\ 420\ x\ 1762{,}5}{2350000}$$
= 317 mm

Digunakan S = 300 mm

$$Av_{min} = \frac{1}{3}\frac{bw.s}{fy} = \frac{1}{3}\frac{4000\ x\ 300}{420} = 952{,}38\ mm^2$$

kontrol , Av_{min} < Av pakai
952,38 mm^2 < 1005,31 mm^2 **(OK)**

7.3.4. Penulangan Torsi

Pengaruh torsi boleh diabaikan bila persamaan berikut terpenuhi.

$$Tu < \varphi\ 0{,}083\sqrt{fc'}.\left(\frac{Acp^2}{Pcp}\right)$$ (SNI 2847-2013 Ps. 11.5)

Tu = 3176103000 Nmm
Acp = 8000000 mm^2
Pcp = 2 (B+H)
= 2(2000+4000)
= 12000 mm

$$\varphi\ 0{,}083\sqrt{fc'}.\left(\frac{Acp^2}{Pcp}\right) = 0.75\ x\ 0{,}083\sqrt{50}.\left(\frac{8000000^2}{12000}\right)$$
= 2660607115 Nmm

$$Tu < \varphi\ 0{,}083\sqrt{fc'}.\left(\frac{Acp^2}{Pcp}\right)$$

3176103000 Nmm < 2660607115 Nmm **(Torsi Diperhitungkan)**

<u>Perhitungan Tulangan Torsi</u>

Tn = Tu/φ
= 3176103000/0,85
= 3736591765 Nmm

Ao = 0,85 Aoh
= 0,85 x (3762,5 x 1762,5)
= 5636695,313 mm^2

Tn = $\frac{2.Ao.At.fy}{s} cot\ \theta$, maka

At/s = $\frac{Tn}{2.Ao.fy.cot\theta}$
= $\frac{3736591765}{2\ x\ 5636695{,}313\ \text{x}\ 420\ \text{x}\ cot\ 45}$
= 0,789 mm^2

Tulangan longitudinal tambahan untuk menahan torsi tidak boleh kurang dari SNI 2847-2013 ps 11.5.3.7

Al = $\frac{At}{s} Ph \left(\frac{fyt}{fy}\right) cot^2\theta$ (Badan Standardisasi Nasional Indonesia, 2013)

Ph = 2 (3762,5+1762,5)
= 11050 mm

Al = $\frac{At}{s} Ph \left(\frac{fyt}{fy}\right) cot^2\theta$
= $0{,}789x11050 \left(\frac{420}{420}\right) cot^2 45$
= 8720,35 mm^2

Luasan total minimum tulangan torsi longitudinal

Al_{min} = $\frac{0{,}42\sqrt{fc'}.Acp}{fy} - \left(\frac{At}{s}\right) ph \frac{fyt}{fy}$
= $\frac{0{,}42\sqrt{50}.8000000}{420} - 0{,}789\ \text{x}11050\text{x}\ \frac{420}{420}$
= 47848,19 mm^2

Maka Al yang digunakan adalah Al_{min} = 47848,19 mm^2

Digunakan D43 mm

As = ¼ π D^2
= ¼ π 43^2
= 1452,2 m^2

n = Al min/As
= 47848,19 mm^2/1452,2 m^2
= 32,95 ≈ 34 buah

Dipakai tulangan torsi longitudinal 34D43

Tulangan transversal tambahan untuk menahan torsi

Tn $= \frac{2.Ao.At.fy}{s} cot\ \theta$

At $= \frac{Tn.s}{2.Ao.fy.cot\theta}$

Syarat spasi tulangan torsi
S < ph/8 = 1381 mm
S < 300 mm

Digunakan tulangan spasi tulangan torsi 300 mm

S = 300 mm

At $= \frac{3736591765x300}{2\ x5636695{,}313x420xcot\ 45}$
= 236.752 mm^2

Dipakai 2D13 mm

As pakai = n .¼ π D^2
= 2 x ¼ π 13^2
= 265.46 mm^2

kontrol, At < As pakai
236.752 mm^2 < 265.46 mm^2 **(OK)**

Maka digunakan tulangan torsi transversal 2D13-300

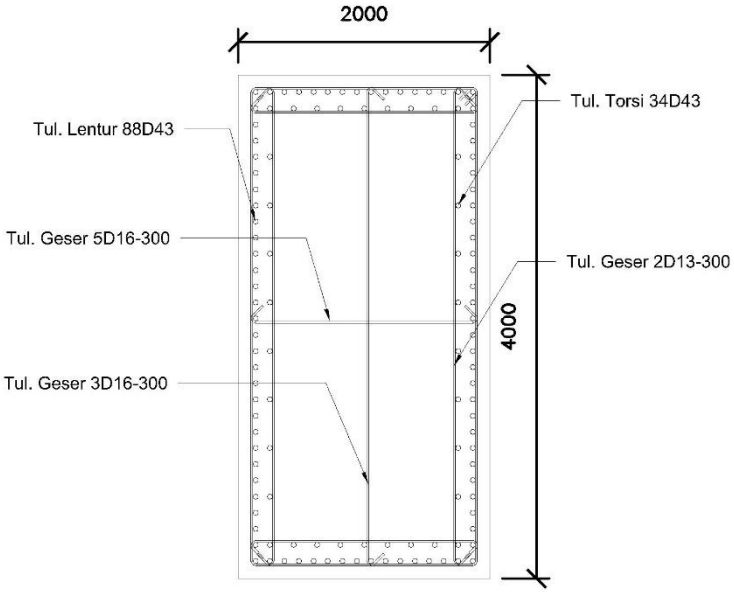

Gambar 7. 12 Penulangan *Pylon* Bawah

“Halaman ini sengaja dikosongkan”

BAB VIII
STRUKTUR KABEL

Struktur kabel merupakan struktur yang penting untuk jembatan *cable stayed*, karena kabel tersebut akan memikul lantai kendaraan dimana lantai kendaraan akan menerima beberapa beban antara lain adalah berat sendiri, beban mati, beban hidup, beban angin, beban saat pelaksaan, dan beban gempa. Semua beban tersebut akan disalurkan ke *pylon*.

8.1. Data Perencanaan

Pada bab preliminary desain telah dijelaskan bahwa ada dua jenis kabel pararel VSL 7-wire strand yang dapat digunakan untuk desain jembatan kabel. Pada desain ini digunakan kabel yang spesifikasinya disesuaikan dengan persyaratan RSNI T-03-2005 pasal 12.6, yang menyatakan bahwa kabel pemikul utama yang dipergunakan untuk struktur-struktur jembatan kabel dan jembatan gantung harus dibuat dari material mutu tinggi dengan kuat Tarik minimum 1800 N/mm2, maka dipakai kabel tipe ASTM A 416-06 Grade 270.

Produk	= VSL SSI 2000
Kuat Tarik,fu	= 1860 (100% GUTS)
Kuat Tarik ijin, fall	= 930 Mpa (50% GUTS)
Diameter 1 strand, s	= 15,2 mm
Luas Penampang, As	= 140 mm^2

GUTS (Guaranteed Ultimate Tensile Strength) merupakan kekuatan tarik yang telah dijamin oleh produsen, dan dalam desain ini digunakan 60% GUTS.

Konfigurasi kabel diberikan pada gambar 8.1 dengan bentang utama pada gambar diberi kode S, dan pada kabel *backstay* diberi kode B.

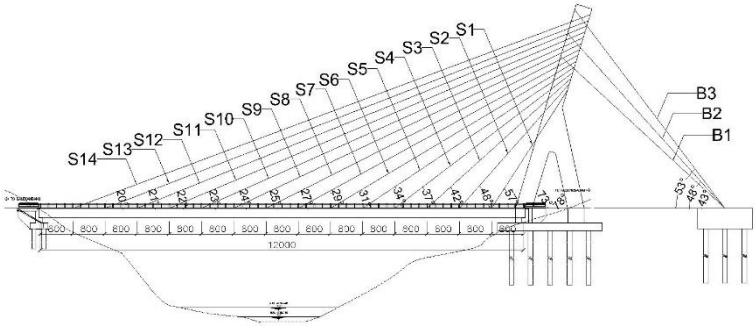

Gambar 8. 1 Penamaan dan Penomoran Kabel

8.2. Gaya Tarik Kabel

Pada bab permodelan telah dijelaskan bahwa kabel akan diberikan gaya tarik dengan 2 tahap yaitu tahap awal dan tahap akhir dengan adanya beban yang bekerja pada lantai kendaraan. Berikut adalah rekapitulasi gaya tarik pada kabel.

Tabel 8. 1 Gaya Tarik Tahap Awal

No	T (kN)
S1	1125.43
S2	1270.10
S3	1410.59
S4	1568.37
S5	1687.91
S6	1832.62
S7	1946.88
S8	2079.05
S9	2233.38
S10	2320.59
S11	2415.64
S12	2519.62
S13	2633.79
S14	2759.68
B1	5706.00
B2	7680.00
B3	11717.00

Tabel 8. 2 Gaya Tarik Tahap Akhir

No	T (kN)
S1	1484.67
S2	1675.52
S3	1860.85
S4	2068.99
S5	2226.70
S6	2417.59
S7	2568.33
S8	2742.68
S9	2946.28
S10	3061.32
S11	3186.72
S12	3323.89
S13	3474.51
S14	3640.58
B1	9141.96
B2	10103.63
B3	12560.82

Dari gaya-gaya tarik tersebut dapat diperoleh kebutuhan strand dan luas penampang kabel yang sebenarnya. Untuk lebih jelasnya dapat dilihat pada tabel 8.3.

$$\text{Asc} = \frac{T}{f_{ni}}$$

$$f_{ni} = f_{ijin} - \gamma_{cb} \cdot \frac{a_1}{Cos\ \alpha_i}$$

Dimana ,

Asc = Luas penampang kabel (mm)

T = Gaya tarik kabel (kN)

f_{ni} = tegangan ijin kabel netto (kN/m^2)

f_{ijin} = tegangan ijin kabel (Mpa)

a_1 = jarak dari pylon ke kabel i (m)

α_i = sudut kemiringan kabel terhadap bidang horizontal

γ_{cb} = densitas kabel (77 kN/m^3)

Tabel 8. 3 Kebutuhan Luas Penampang yang Sebenarnya

No	T (kN)	cos α	a_1 (m)	fni (kN/m^2)	Asc (mm)	n strand
S1	1484.67	0.545	8	928.87	1598.37	12
S2	1675.52	0.669	16	928.16	1805.20	13
S3	1860.85	0.743	24	927.51	2006.28	15
S4	2068.99	0.799	32	926.92	2232.13	16
S5	2226.70	0.829	40	926.29	2403.90	18
S6	2417.59	0.857	48	925.69	2611.67	19
S7	2568.33	0.875	56	925.07	2776.36	20
S8	2742.68	0.891	64	924.47	2966.76	22
S9	2946.28	0.906	72	923.89	3189.01	23
S10	3061.32	0.914	80	923.26	3315.78	24
S11	3186.72	0.921	88	922.64	3453.91	25
S12	3323.89	0.927	96	922.03	3604.97	26
S13	3474.51	0.934	104	921.43	3770.80	27
S14	3640.58	0.940	112	920.83	3953.60	29
B1	9141.96	0.731	50	924.74	9886.01	71
B2	10103.63	0.669	50	924.25	10931.73	79
B3	12560.82	0.602	50	923.60	13599.78	98

Dari hasil tabel diatas digunakan 22 strand untuk kabel S1-S8, 29 strand untuk kabel S9-S14 dan 98 strand untuk kabel B.

8.3. Analisa Penampang Kabel

Penampang kabel akan dicek, apabila kabel dengan desain A_{pakai} tersebut mampu untuk menahan gaya kabel sebenarnya (T) , maka penampang kabel memenuhi syarat. Berikut contoh perhitungannya:

Kabel S14

As_{pakai} = 3953,6

Tn = f ijin . As_{pakai}

= 0,930 kN/mm^2 x 3953,6 mm^2

= 3677 kN

T < Tn

3640.58 kN < 3677 kN (OK)

Perhitungan kontrol kemampuan kabel dengan penampang aktual akibat gaya tarik yang terjadi lainnya dapat dilihat pada Tabel 8.4 berikut ini.

Tabel 8. 4 Kontrol Kemampuan Kabel dari As_{pakai}

No	f ijin	As_{pakai}	Tn	T	Kontrol
	(kN/mm^2)	(mm^2)	(kN)	(kN)	
S1	0.93	2966.76	2759	1484.67	OK
S2	0.93	2966.76	2759	1675.52	OK
S3	0.93	2966.76	2759	1860.85	OK
S4	0.93	2966.76	2759	2068.99	OK
S5	0.93	2966.76	2759	2226.70	OK
S6	0.93	2966.76	2759	2417.59	OK
S7	0.93	2966.76	2759	2568.33	OK
S8	0.93	2966.76	2759	2742.68	OK
S9	0.93	3953.60	3677	2946.28	OK
S10	0.93	3953.60	3677	3061.32	OK
S11	0.93	3953.60	3677	3186.72	OK
S12	0.93	3953.60	3677	3323.89	OK
S13	0.93	3953.60	3677	3474.51	OK
S14	0.93	3953.60	3677	3640.58	OK
B1	0.93	13599.78	12648	9141.96	OK
B2	0.93	13599.78	12648	10103.63	OK
B3	0.93	13599.78	12648	12560.82	OK

Dari hasil kontrol diatas dapat disimpulkan bahwa untuk kebutuhan luas penampang dan jumlah strand kabel yang dipakai sudah mampu untuk menahan gaya tarik maksimum yang terjadi.

8.4. Perhitungan Angkur pada Gelagar

Angkur kabel pada gelagar dipasang angkur hidup. Pada desain angkur ini akan dilakukan kontrol tegangan pelat baja pada saat stressing (pemberian gaya tarik).

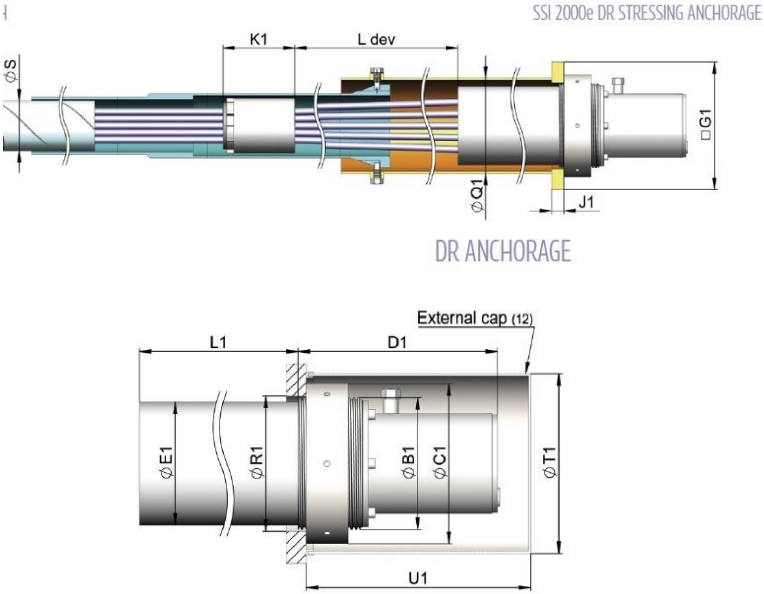

Gambar 8. 2 Detail *Stressing* Angkur VSL SSI 2000

Tabel 8. 5 Spesifikasi Teknis *Stressing* Angkur VSL SSI 2000

CABLE UNIT	DR - STRESSING END				DR - STRESSING END							
	BEARING PLATE			GUIDE PIPE	SSI 2000e (4) / SSI 2000D (5)							
	G1	J1	ØR1	ØQ1 / thk	ØB1	ØC1	D1	ØE1	L1 SSI 2000e	L1 SSI 2000D	ØT1	U1
	[mm] (7)	[mm] (7)	[mm]	[mm] (7)	[mm]	[mm]	[mm]	[mm]	[mm] (11)	[mm]	[mm] (12)	[mm] (12)
6-12	290	30	196	219.1 / 6.3	190	230	330	177,8	535 / -	35	250	440
6-19	355	35	241	267 / 6.3	235	285	355	219,1	535 / -	35	310	450
6-22	385	40	261	298.5 / 7.1	255	310	360	244,5	535 / -	35	330	450
6-27	425	40	281	323.9 / 7.1	275	335	390	244,5	540 / 740	35	355	470
6-31	440	45	291	323.9 / 7.1	285	350	410	273	540 / 740	35	370	480
6-37	485	50	316	355.6 / 8	310	380	440	298,5	540 / 740	35	406	490
6-43	540	55	356	406.4 / 8.8	350	425	450	323,9	540 / 740	35	457	500
6-55	585	60	391	419 / 10	385	470	490	368	540 / 740	35	508	520
6-61	600	65	391	419 / 10	385	470	530	368	540 / 740	35	508	555
6-73	680	75	446	508 / 11	440	530	540	406,4	550 / 750	35	560	555
6-85	710	80	446	508 / 11	440	540	590	406,4	550 / 750	35	570	615
6-91	760	80	496	559 / 12.5	490	590	600	457	550 / 750	35	620	635
6-109	795	90	511	559 / 12.5	505	610	640	457	550 / 750	35	640	660
6-127	865	95	566	610 / 12.5	560	670	670	508	550 / 750	35	700	720
6-139	910	100	590	660 / 12.5	580	700	695	559	560 / 760	- (10)	- (10)	- (10)
6-151	940	100	590	660 / 12.5	580	720	695	559	560 / 760	- (10)	- (10)	- (10)
6-169	1000	110	650	711 / 12.5	640	790	730	610	560 / 760	- (10)	- (10)	- (10)
6-187 (9)	1050	120	670	711 / 12.5	660	820	770	610	560 / 760	- (10)	- (10)	- (10)

Data yang digunakan

Angkur strand 22		Angkur strand 29	
ØC1	= 310 mm	ØC1	= 350 mm
G1	= 385 mm	G1	= 440 mm

Pelat BJ41
fy = 250 Mpa
fu = 410 Mpa
tf = 60 mm
Contoh perhitungan angkur pada S14 karena mempunyai gaya yang paling besar.
T = 3640,58 kN
ØC1 = 350 mm
G1 = 440 mm
Ap' = G1 x G1
= 440 mm x 440 mm
= 193600 mm^2
Ap = Ap' – ¼ π.ØC1^2
= 193600 mm^2 - ¼.π.350^2
= 97388,72 mm^2

Tegangan ijin pelat baja pada saat pemberian gaya tarik

fyp = 0,8 fy $\sqrt{\frac{Ap\prime}{Ap} - 0{,}2}$

= 0,8 x 250 $\sqrt{\frac{193600}{97388{,}72} - 0{,}2}$

= 267.43 Mpa
fyt = T/Ap
= 3640,58 / 97388,72
= 37.38 Mpa
Kontrol ,
fyt < fyp
37.38 Mpa < 267.43 Mpa **(OK)**

Untuk perhitungan kontrol tegangan anker lain akan disajikan dalam bentuk tabel, dapat dilihat pada tabel 8.6.

Tabel 8. 6 Perhitungan Angkur

No	jumlah strand	ØC1 (mm)	G1 (mm)	T (kN)	Ap' (mm^2)	Ap (mm^2)	fyp (Mpa)	fyt (Mpa)	Kontrol
S1	22	310	2759	1484.67	148225	72748.24	271.11	20.41	OK
S2	22	310	2759	1675.52	148225	72748.24	271.11	23.03	OK
S3	22	310	2759	1860.85	148225	72748.24	271.11	25.58	OK
S4	22	310	2759	2068.99	148225	72748.24	271.11	28.44	OK
S5	22	310	2759	2226.70	148225	72748.24	271.11	30.61	OK
S6	22	310	2759	2417.59	148225	72748.24	271.11	33.23	OK
S7	22	310	2759	2568.33	148225	72748.24	271.11	35.30	OK
S8	22	310	2759	2742.68	148225	72748.24	271.11	37.70	OK
S9	29	350	3677	2946.28	193600	97388.72	267.43	30.25	OK
S10	29	350	3677	3061.32	193600	97388.72	267.43	31.43	OK
S11	29	350	3677	3186.72	193600	97388.72	267.43	32.72	OK
S12	29	350	3677	3323.89	193600	97388.72	267.43	34.13	OK
S13	29	350	3677	3474.51	193600	97388.72	267.43	35.68	OK
S14	29	350	3677	3640.58	193600	97388.72	267.43	37.38	OK

Berikut ilustrasi pelat angkur pada titik pengangkuran dapat dilihat pada gambar 8.2

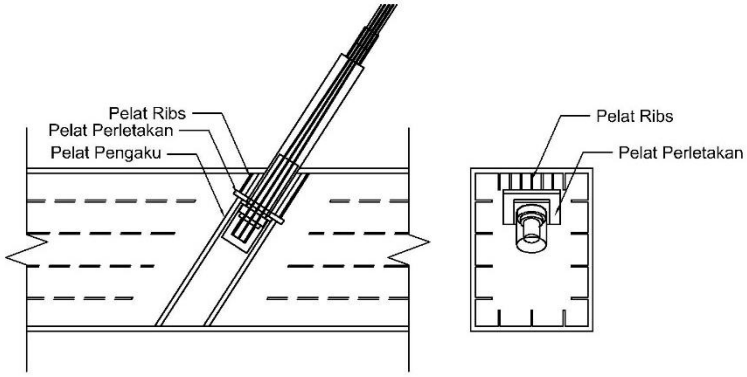

Gambar 8. 3 Pelat Angkur pada *Steel Box*

Kontrol penampang pelat pada angkur, digunakan kabel S14 karena mempunyai gaya yang terbesar.

1. Kuat Lentur pelat sayap

ϕRn = 0,9 x 6,25 x fy x tf^2 (SNI 1729-2015 ps J.10.1)

= 0,9 x 62,5 x 250 N/mm^2 x $(60\ mm)^2$

= 5062500 N

= 5062,5 kN

2. Kuat Leleh Pelat Badan

ϕRn = fy x tw x (5k + lb) (SNI 1729-2015 ps J.10.2)

Dimana :

k = tebal pelat sayap ditambah jari-jari peralihan.

lb = panjang tumpuan (tidak kurang dari k untuk reaksi balok ujung)

ϕRn = 250 N/mm^2 x 60 mm x (5 x 60 mm + 440 mm)

= 11100000 N

= 11100 kN

3. Kuat Pelipatan pada Badan

(SNI 1729-2015 ps J.10.3)

$$\phi Rn = 0{,}75 \times 0{,}08\ tw^2\left[1 + 3\left(\frac{l\text{b}}{d}\right)\left(\frac{tw}{tf}\right)^{1,5}\right]\sqrt{\frac{E.fy.tf}{tw}}$$

$$= 0{,}75 \times 0{,}08\ 60^2\left[1 + 3\left(\frac{440}{2000}\right)\left(\frac{60}{60}\right)^{1,5}\right]\sqrt{\frac{2.10^5.250.60}{60}}$$

= 25354020,75 N

= 25354,02 kN

4. Kuat Tekuk Tekan Badan

$$\phi Rn = 0{,}9 \times \frac{24.tw^3\sqrt{E.fy}}{h}$$ (SNI 1729-2015 ps J.10.4)

$$= 0{,}9 \times \frac{24.60^3\sqrt{2.10^5.250}}{2000}$$

= 16495386.99 N

= 16495,39 kN

Dari perhitungan diatas dipakai nilai ϕRn yang terkecil sebesar 5062,5 kN.

Kontrol , T < ϕRn

3640,58 kN < 5062,5 kN **(OK)**

8.5. Perhitungan Angkur pada *Pylon*

Angkur kabel dipasang sesuai jumlah strand yang telah dihitung. Pada daerah pengangkuran perlu disediakan tulangan untuk menahan pencaran (bursting) dan pengelupasan (spalling) agar lokasi pengangkuran tidak hancur atau angkur tertarik kedalam beton akibat gaya tarik kabel.

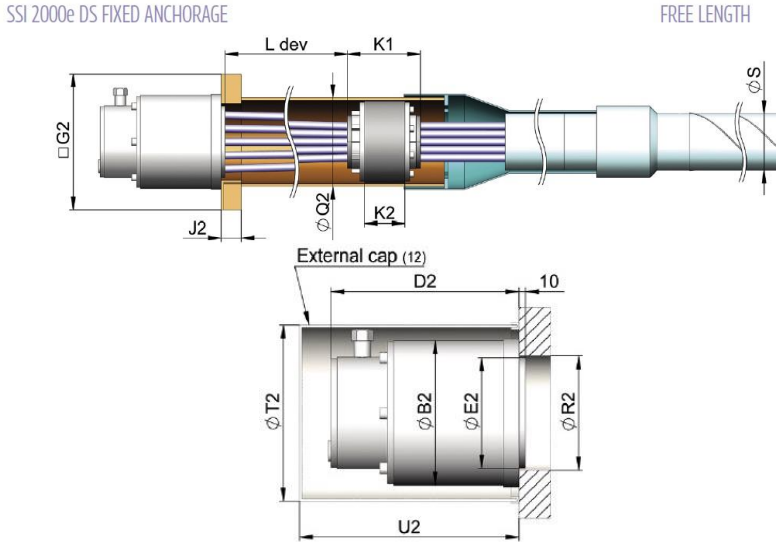

Gambar 8. 4 Detail *Fixed* Angkur VSL SSI 2000

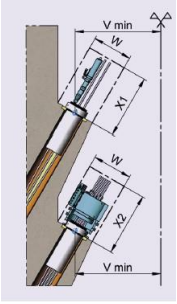

Gambar 8. 5 Angkur Pada *Pylon*

Tabel 8. 7 Spesifikasi Teknis *Fixed* Angkur VSL SSI 2000

CABLE UNIT	DEVIATION DEVICE			DS - FIXED END				DS - FIXED END				
				BEARING PLATE			GUIDE PIPE	SSI 2000e (4) / SSI 2000D (5)				
	K1	K2	L dev (min)	G2	J2	ØR2	ØQ2 / thk	ØB2	D2	ØE2	ØT2	U2
	[mm]	[mm]	[mm]	[mm] (7)	[mm] (7)	[mm]	[mm] (7)	[mm]	[mm]	[mm]	[mm] (12)	[mm] (12)
6-12	160	60	800	260	35	150	177.8 / 4.5	190	300	144	219	300
6-19	180	100	1100	335	50	182	219.1 / 6.3	230	300	176	250	300
6-22	210	100	1250	355	50	202	219.1 / 6.3	250	300	196	273	300
6-27	210	120	1350	380	50	216	244.5 / 6.3	270	300	210	300	300
6-31	210	120	1450	415	60	226	244.5 / 6.3	280	300	220	310	300
6-37	210	120	1600	455	70	250	273 / 6.3	310	300	244	340	300
6-43	210	140	1850	505	75	280	323.9 / 7.1	340	300	274	370	300
6-55	260	140	1950	550	75	290	323.9 / 7.1	380	300	284	406	300
6-61	260	160	2150	585	85	316	355.6 / 8	390	315	310	420	315
6-73	290	180	2350	650	95	346	406.4 / 8.8	435	330	340	457	330
6-85	290	200	2500	685	110	356	406.4 / 8.8	440	360	350	470	360
6-91	320	200	2700	730	110	386	457 / 10	480	370	380	508	370
6-109	320	220	2850	775	120	406	457 / 10	500	380	400	530	380
6-127	340	220	3250	845	130	450	508 / 11	550	430	444	580	430
6-139	370	240	3300	900	135	460	508 / 11	580	435	454	- (10)	- (10)
6-151	380	240	3400	920	140	470	559 / 12.5	590	445	464	- (10)	- (10)
6-169	400	260	3800	970	150	520	610 / 12.5	640	465	514	- (10)	- (10)
6-187 (9)	400	260	3800	1000	160	530	610 / 12.5	660	485	524	- (10)	- (10)

Tabel 8. 8 *Clearences* pada *Pylon*

CABLE UNIT	REQUIRED CLEARANCES		REQUIRED JACK CLEARANCES			
	Y	Z	V min	W	X1	X2
	[mm]	[mm]	[mm]	[mm]	[mm]	[mm]
6-12	250	450	1500	490	1000	1000
6-19	300	450	1500	490	1000	1000
6-22	320	450	1500	620	1050	1100
6-27	340	450	1500	620	1050	1100
6-31	350	450	1500	620	1050	1100
6-37	380	450	1500	620	1050	1100
6-43	410	450	1500	620	1050	1100
6-55	450	450	1500	800	1100	1200
6-61	460	470	1500	800	1100	1200
6-73	530	500	1500	800	1100	1200
6-85	540	530	1500	800	1150	1300
6-91	580	540	1500	800	1150	1300
6-109	600	550	1800	970	1200	1500
6-127	650	600	1800	970	1200	1500
6-139	700	610	2000	- (2)	1250	- (2)
6-151	710	620	2000	- (2)	1250	- (2)
6-169	760	640	2000	- (2)	1250	- (2)
6-187 (1)	780	660	2000	- (2)	1250	- (2)

Diberikan contoh pada angkur kabel B3.

T = 12560,82 kN

a = G2 = 775 mm

W = 970 mm

1. Akibat pancaran (*bursting*)

T_{pencar} = 0,25 x T (SNI 2847-2013 pasal 18.13.3.3)

$= 0{,}25 \text{ x T x } \left(1 - \frac{G2}{W}\right)$

$= 0{,}25 \text{ x } 12560820 \text{ N x } \left(1 - \frac{775}{970}\right)$

= 631278,334 N

d_{pencar} = 0,5 x W = 0,5 x 970 = 485 mm

Digunakan Sengkang D16 (As = 201,06 mm^2)

As_{perlu} = T_{pencar}/ f_{ys}
= 631278,334 N / 420 N/mm^2
= 1503,044 mm^2
n = As_{perlu}/As
= 1503,044 mm^2/201,06 mm^2
= 7,47 ≈ 8 buah

Menentukanan jarak antar sengkang untuk menahan pancaran

S = d_{pencar} / n
= 485 mm/ 8
= 60,6

Maka dipasang sengkang 8D16 – 60

2. Akibat Pengelupasan (*spalling*)

Untuk mencegah terjadi pecah (spalling), dipasang tulangan dengan kuat tarik 2%T.

2%T = 2% x 12560820 N
= 2512164,037 N
As_{perlu} = 2%T /fy
= 2512164,037 N / 420 N/mm^2
= 5981,343 mm^2

Digunakan tulangan D22 (As = 380,13 mm^2)

n = As_{perlu} /As
= 5981,343 mm^2/380,13 mm^2
= 15,7 ≈ 16 buah

Untuk kebutuhan tulangan pada kabel yang lain akan dapat dilihat pada Tabel 8.9.

Tabel 8. 9 Kebutuhan Tulangan Daerah Pengangkuran

No	jumlah strand	G2 (mm)	W (mm)	T (kN)	Pencaran(*Bursting*)				Pecah (*spalling*)	
					T_{pencar} (kN)	As(mm^2)	n	jarak	As(mm^2)	n
S1	22	355	620	1484.67	158645	377.725	2	150	706.987	2
S2	22	355	620	1675.52	179037	426.279	3	100	797.865	3
S3	22	355	620	1860.85	198841	473.431	3	100	886.119	3
S4	22	355	620	2068.99	221082	526.386	3	100	985.236	3
S5	22	355	620	2226.70	237933	566.507	3	100	1060.331	3
S6	22	355	620	2417.59	258331	615.075	4	75	1151.234	4
S7	22	355	620	2568.33	274439	653.426	4	75	1223.015	4
S8	22	355	620	2742.68	293069	697.783	4	75	1306.040	4
S9	29	415	620	2946.28	243543	579.865	3	100	1402.991	4
S10	29	415	620	3061.32	253053	602.507	3	100	1457.773	4
S11	29	415	620	3186.72	263419	627.187	4	75	1517.487	4
S12	29	415	620	3323.89	274757	654.184	4	75	1582.806	5
S13	29	415	620	3474.51	287207	683.827	4	75	1654.527	5
S14	29	415	620	3640.58	300935	716.512	4	75	1733.610	5
B1	98	775	970	9141.96	459454	1093.939	6	80	4353.316	12
B2	98	775	970	10103.63	507786	1209.013	7	60	4811.253	13
B3	98	775	970	12560.82	631278	1503.044	8	60	5981.343	16

“Halaman ini sengaja dikosongkan”

BAB IX
PERENCANAAN BANGUNAN BAWAH

9.1. Perencanaan Abutmen A1

Bangunan abutmen A1 jembatan direncanakan dapat menahan beban-beban yang terjadi pada bangunan atas yang dipikul serta beban yang terjadi pada abutmen sendiri. Berikut adalah analisa perencanaan abutmen A1.

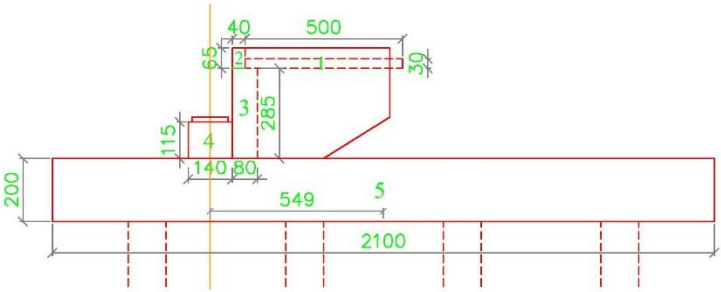

Gambar 9. 1 Dimensi Abutmen A1

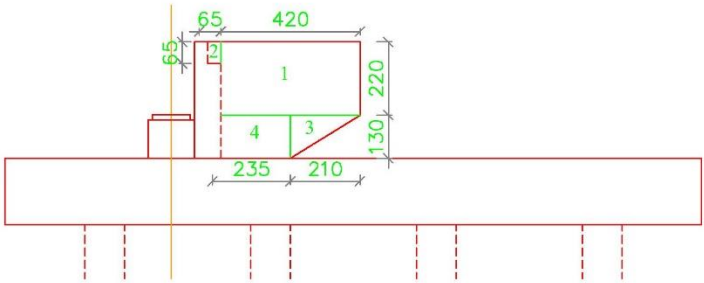

Gambar 9. 2 Dimensi Wingwall A1

9.1.1. Pembebanan Abutmen A1

1. Beban Mati sendiri

Tabel 9. 1 Perhitungan Beban Mati Abutmen A1

	bidang	b	h	L	γ	berat	x	Momen
		(m)	(m)	(m)	t/m^3)	(ton)	(m)	(t-m)
ABUTMEN	1	5	0.3	10	2.5	37.50	3.6	135.00
	2	0.4	0.65	13	2.5	8.45	0.9	7.61
	3	0.8	2.85	13	2.5	74.10	1.1	81.51
	4	1.4	1.15	13	2.5	52.33	0	0.00
	5	21	2	25	2.5	2625	5.49	14411
WING WALL	1	4.2	2.2	0.5	2.5	23.10	3.6	83.16
	2	0.4	0.65	0.5	2.5	0.65	1.3	0.85
	3	2.1	1.3	0.5	2.5	3.41	4.3	14.67
	4	2.1	1.3	0.5	2.5	6.83	2.55	17.40
Timbunan		14.85	3.50	13	1.8	1216.22	1.95	2371.62
TOTAL						4047.58		17123.07

2. Beban Timbunan

Tinggi Dinding Abutmen , h = 3,5 m

Berat Jenis Tanah, γ = 1,8 t/m^3

Maka nilai beban merata tanah timbunan didapatkan

q = 1.8 t/m^3 x 3,5 m = 6,3 t/m^2

3. Beban Tekanan Tanah

Koefisien Tanah Aktif

φ = 30°

$$Ka = \tan^2\left(45 - \frac{\varphi}{2}\right)$$

$$= \tan^2\left(45 - \frac{30}{2}\right)$$

$$= 0{,}333$$

h ekuivalen abutmen = 0,6 m

q = 0,6 x γ

= 0,6 x 1,8 t/m^3

= 1,08 t/m^2

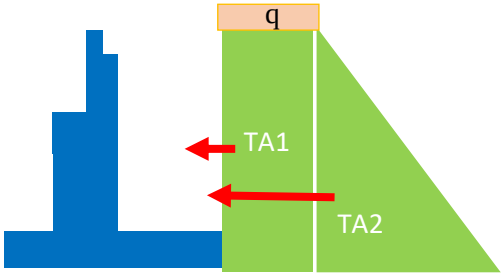

Gambar 9. 3 Ilustrasi Tekanan Tanah aktif

Tinggi Abutmen , H = 5,5 m

TA_1 = q x Ka x H

= 1,08 t/m^2 x 0,333 x 5,5 m

= 1,98 ton/m

TA_2 = ½ x γ x Ka x H^2

= ½ x 1,8 t/m^3 x 0,333 x (5,5 m)^2

= 9,075 t/m

Momen akibat tekanan tanah aktif

MTA_1 = TA_1 x $\left(\frac{H}{2}\right)$ x b

= 1,98 t/m x $\left(\frac{5{,}5\ m}{2}\right)$ x 13 m

= 70,785 tonm

MTA_2 = TA_2 x $\left(\frac{H}{3}\right)$ x b

= 9,075 t/m x $\left(\frac{5{,}5\ m}{3}\right)$ x 13 m

= 216,288 tonm

4. Beban Reaksi Akibat Bangunan Atas

Didapatkan dari hasil CSI Bridge pada perletakan

Pu = 179,925 ton

Didapatkan dari hasil CSI Bridge gaya dalam pada pylon

Mu = 3124,447 tonm

Vu = 1030,94 ton

5. Gaya Rem (TB)

- 5% dari beban truk rencana ditambah beban lajur terbagi rata

TB= 5% x (Beban truk + BTR)

= 5% x (146,25 kN + 5,625 kN/m^2 x 7 m x 120 m)

= 243,56 kN

= 24,356 ton

Momen Akibat Rem

MTB = TB x ($H_{abutmen}$ – H_{box})

= 24,356 ton (5,5 m – 2 m)

= 85,247 tonm

9.1.2. Kontrol Stabilitas

- Strabilitas Guling

Momen penyebab Guling = MTA_1 + MTA_2 + Mu

= 70,785 + 216,288 + 3124,447

= 3411,519 tonm (A)

Momen Pelawan Guling = 17123,07 tonm (B)

Angka keamanan = 1,5

kontrol , $\frac{B}{A}$> 1,5

$\frac{17123,07}{3411,519}$ = 5,02 > 1,5 **(OK)**

- Strabilitas Geser

Tanah didasar abutmen

$\phi = 35^o$

Arah x

Gaya penyebab Geser = TA_1 x L+ TA_2 x L + Vu

= 1,98 x 13 + 9,075 x 13 + 1030,94

= 1168,716 ton (A)

Gaya Pelawan Geser = $W_{abutmen}$ tan ϕ

= 4047,58 tan (35)

= 2834,144 ton (B)

Angka keamanan = 1,5

kontrol , $\frac{B}{A}$> 1,5

$\frac{2834,144}{1168,716}$ = 2,43 > 1,5 **(OK)**

9.1.3. Penulangan Abutmen A1

1. Penulangan Backwall

B = 0,8 m
h = 2,85 m
cover, d= 50 mm
d' = 750 mm
fc' = 30 Mpa
fy = 320 Mpa

Momen yang terjadi

Mu = ½ TB x h
= ½ x 24,356 ton x 2,85 m
= 34,708 tonm

direncanakan tulangan D19 – 150

Ast $= \frac{¼\,\pi D^2\ x\ b}{s} = \frac{¼\,\pi 19^2\ x\ 1000}{150}$ = 1890,192 mm^2

T = Ast x fy
= 1890,192 mm^2 x 320 N/mm
= 604861,31 N/mm

a $= \frac{T}{0{,}85.fc'.b} = \frac{604861{,}31}{0{,}85x30x1000}$ = 23,72 mm

Momen yang tersedia

Mn $= 0{,}8\ x\ T\ x(d' - \frac{a}{2})$
$= 0{,}8\ x\ 604861{,}31\ \ x(750 - \frac{23{,}72}{2})$
= 35,72 tonm

kontrol , Mu < Mn
34,708 tonm < 35,72 tonm **(OK)**

Tulangan bagi dipasang 20% tulangan utama

As' = 0,2 x 1890,192 mm^2
= 378,038 mm^2

Direncanakan tulangan D10 – 200

Ast' $= \frac{¼\,\pi D^2\ x\ b}{s} = \frac{¼\,\pi 10^2\ x\ 1000}{200}$ = 392,699 mm^2

Kontrol, As' < Ast'
378,038 mm^2 < 392,699 mm^2 **(OK)**

2. Penulangan Pilar Abutmen

B = 1.4 m

h = 1,15 m

h' = H – $h_{pilecap}$ = 5,5 – 2 = 3,5 m

cover, d= 50 mm

d' = 1350 mm

fc' = 30 Mpa

fy = 320 Mpa

Momen yang terjadi

Mu = $\frac{(M1+M2+M3)}{L} + MTB - \frac{1}{2}h'.TA_1 - \frac{1}{3}h'.TA_2$

= $\frac{(135+7.61+81,51)}{13} + 85,247 - \frac{1}{2}3,5x1,98 - \frac{1}{3}3,5x9,075$

= 95,994 tonm

direncanakan tulangan D19 – 100

Ast = $\frac{¼\,\pi D^2\ x\ b}{s} = \frac{¼\,\pi 19^2\ x\ 1000}{100}$ = 2835,29 mm^2

T = Ast x fy

= 2835,29 mm^2 x 320 N/mm

= 907291,958 N/mm

a = $\frac{T}{0,85.fc'.b} = \frac{907291,958}{0,85x30x1000}$ = 35,58 mm

Momen yang tersedia

Mn = $0,8\ x\ T\ x(d' - \frac{a}{2})$

= $0,8\ x\ 907291,958\ \ x(1350 - \frac{35,58}{2})$

= 96,696 tonm

kontrol , Mu < Mn

95,994 tonm < 96,696 tonm **(OK)**

Tulangan bagi dipasang 20% tulangan utama

As' = 0,2 x 2835,29 mm^2

= 567,057 mm^2

Direncanakan tulangan D10 – 130

Ast' = $\frac{¼\,\pi D^2\ x\ b}{s} = \frac{¼\,\pi 10^2\ x\ 1000}{130}$ = 604,152 mm^2

Kontrol, As' < Ast'

567,057 mm^2 < 604,152 mm^2 **(OK)**

3. Penulangan Pile Cap

B = 21 m

h = 2 m

cover, d= 100 mm

d' = 20900 mm

fc' = 30 Mpa

fy = 320 Mpa

Momen yang terjadi

Mu = 1/8 x Pu x B + M_{pylon}

= 1/8 x 179,925 ton x 21 m x 3124,447 tonm

= 3596,75 tonm

direncanakan tulangan D36 – 150

Ast $= \frac{¼\,\pi D^2\ x\ b}{s} = \frac{¼\,\pi 36^2\ x\ 1000}{150}$ = 6785,84 mm^2

T = Ast x fy

= 6785,84 mm^2 x 320 N/mm

= 2171468,842 N/mm

a $= \frac{T}{0{,}85.fc'.b} = \frac{2171468{,}842}{0{,}85x30x1000}$ = 85,16 mm

Momen yang tersedia

Mn $= 0{,}8\ x\ T\ x(d' - \frac{a}{2})$

$= 0{,}8\ x\ 2171468{,}842\ \ x(20900 - \frac{85{,}16}{2})$

= 3623.3 tonm

kontrol , Mu < Mn

3596,75 tonm < 3623.3 tonm **(OK)**

Tulangan bagi dipasang 20% tulangan utama

As' = 0,2 x 6785,84 mm^2

= 1357,168 mm^2

Direncanakan tulangan D22 – 250

Ast' $= \frac{¼\,\pi D^2\ x\ b}{s} = \frac{¼\,\pi 22^2\ x\ 1000}{250}$ = 1520,53 mm^2

Kontrol, As' < Ast'

1357,168 mm^2 < 1520,53 mm^2 **(OK)**

4. Penulangan Wingwall Atas

B = 0,5 m

h = 2,2 m

cover, d= 50 mm

d' = 450 mm

fc' = 30 Mpa

fy = 320 Mpa

Momen yang terjadi

Mu = ½ h x TA_1 + 1/3 h x TA_2

= ½ x 2,2 x 1,98 + 1/3 x 2,2 x 9,075

= 8,833 tonm

direncanakan tulangan D16 – 250

Ast $= \frac{¼\,\pi D^2\ x\ b}{s} = \frac{¼\,\pi 16^2\ x\ 1000}{250}$ = 804,25 mm^2

T = Ast x fy

= 804,25 mm^2 x 320 N/mm

= 257359,27 N/mm

a $= \frac{T}{0{,}85.fc'.b} = \frac{257359{,}27}{0{,}85x30x1000}$ = 10,09 mm

Momen yang tersedia

Mn $= 0{,}8\ x\ T\ x(d' - \frac{a}{2})$

$= 0{,}8\ x\ 257359{,}27\ \ x\left(450 - \frac{10{,}09}{2}\right)$

= 9,16 tonm

kontrol , Mu < Mn

8,833 tonm < 9,16 tonm **(OK)**

Tulangan bagi dipasang 20% tulangan utama

As' = 0,2 x 804,25 mm^2

= 160,85 mm^2

Direncanakan tulangan D10 – 250

Ast' $= \frac{¼\,\pi D^2\ x\ b}{s} = \frac{¼\,\pi 10^2\ x\ 1000}{250}$ = 314,16 mm^2

Kontrol, As' < Ast'

160,85 mm^2 < 314,16 mm^2 **(OK)**

5. Penulangan Wingwall Bawah

B = 0,5 m

h = 3,5 m

cover, d= 50 mm

d' = 450 mm

fc' = 30 Mpa

fy = 320 Mpa

Momen yang terjadi

Mu = ½ h x TA_1 + 1/3 h x TA_2

= ½ x 3,5 x 1,98 + 1/3 x 3,5 x 9,075

= 14.0525 tonm

direncanakan tulangan D16 – 150

Ast $= \frac{¼\,\pi D^2\ x\ b}{s} = \frac{¼\,\pi 16^2\ x\ 1000}{150}$ = 1340,413 mm^2

T = Ast x fy

= 1340,413 mm^2 x 320 N/mm

= 428932, 117 N/mm

a $= \frac{T}{0{,}85.fc'.b} = \frac{428932{,}117}{0{,}85x30x1000}$ = 16,82 mm

Momen yang tersedia

Mn $= 0{,}8\ x\ T\ x(d' - \frac{a}{2})$

$= 0{,}8\ x\ 428932{,}117\ x(450 - \frac{16{,}83}{2})$

= 15,153 tonm

kontrol , Mu < Mn

14.0525 tonm < 15,153 tonm **(OK)**

Tulangan bagi dipasang 20% tulangan utama

As' = 0,2 x 1340,413 mm^2

= 268,083 mm^2

Direncanakan tulangan D10 – 250

Ast' $= \frac{¼\,\pi D^2\ x\ b}{s} = \frac{¼\,\pi 10^2\ x\ 1000}{250}$ = 314,16 mm^2

Kontrol, As' < Ast'

268,083 mm^2 < 314,16 mm^2 **(OK)**

9.1.4. Analisa Pondasi

Pada abutment A1 data tanah yang digunakan merupakan data pada bore hole BH-1 dapat dilihat pada Gambar 9.4

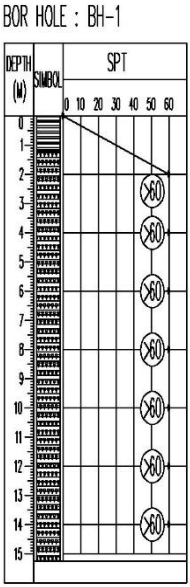

Gambar 9. 4 Data Tanah pada Bore Hole BH-1

Dari data tanah diatas dapat diasumsikan nilai N-SPT pada kedalaman selanjutnya >60. Permodelan parameter tanah dalam program CSI Bridge pada tiang pondasi (*bore pile*) menggunakan konstanta pegas.

$k = k_0 . y^{-1/2}$ (Nakazawa, 2000)

$k_0 = 0{,}2 . E_0 . D^{-3/4}$

$E_0 = 28N$

kx = k x D x dz

$K_v = a . \frac{A_p . E_p}{l}$

a = 0,022(l/D) - 0,05

Direncanakan :
Diameter Bore Pile , D = 1,2 m
Luas Bore Pile , Ap = 1,131 m^2
y = Besarnya pergeseran yang akan di cari (cm) = 1 cm

Berikut merupakan besaran konstanta pegas yang di input pada tiang pondasi untuk setiap meternya.

Tabel 9. 2 Nilai Spring Abutmen A1

Depth	N-SPT	N	E0	k	kx	kv
(m)		rata2	Kg/cm^2	kg/cm^2	ton/m	ton/m
0	0	0	0	0.000	0.00	0.00
1	0	0	0	0.000	0.00	-92196.24
2	0	0	0	0.000	0.00	-19409.73
3	0	10	280	1.545	5560.38	4852.43
4	60	50	1400	7.723	37069.21	16983.52
5	60	60	1680	9.267	55603.82	24262.17
6	60	60	1680	9.267	66724.58	29114.60
7	60	60	1680	9.267	77845.34	32580.63
8	60	60	1680	9.267	88966.10	35180.14
9	60	60	1680	9.267	100086.87	37201.99
10	60	60	1680	9.267	111207.63	38819.47
11	60	60	1680	9.267	122328.39	40142.86
12	60	60	1680	9.267	133449.16	41245.69
13	60	60	1680	9.267	144569.92	42178.85
14	60	60	1680	9.267	155690.68	42978.70
15	60	60	1680	9.267	166811.45	43671.90
16	60	60	1680	9.267	177932.21	44278.46
17	60	60	1680	9.267	189052.97	44813.65
18	60	60	1680	9.267	200173.74	45289.38
19	60	60	1680	9.267	211294.50	45715.03
20	60	60	1680	9.267	222415.26	46098.12
21	60	60	1680	9.267	233536.02	46444.72
22	60	60	1680	9.267	244656.79	46759.82

Depth	N-SPT	N	E0	k	kx	kv
(m)		rata2	Kg/cm^2	kg/cm^2	ton/m	ton/m
23	60	60	1680	9.267	255777.55	47047.51
24	60	60	1680	9.267	266898.31	47311.23
25	60	60	1680	9.267	278019.08	47553.85
26	60	60	1680	9.267	289139.84	47777.81
27	60	60	1680	9.267	300260.60	47985.18
28	60	60	1680	9.267	311381.37	48177.73
29	60	60	1680	9.267	322502.13	48357.01
30	60	60	1680	9.267	333622.89	48524.34
31	60	60	1680	9.267	344743.66	48680.87
32	60	60	1680	9.267	355864.42	48827.61
33	60	60	1680	9.267	366985.18	48965.47
34	60	60	1680	9.267	378105.95	49095.21
35	60	60	1680	9.267	389226.71	49217.54
36	60	60	1680	9.267	400347.47	49333.08
37	60	60	1680	9.267	411468.23	49442.36
38	60	60	1680	9.267	422589.00	49545.90
39	60	60	1680	9.267	433709.76	49644.13
40	60	60	1680	9.267	444830.52	49737.45
41	60	60	1680	9.267	455951.29	49826.21
42	60	60	1680	9.267	467072.05	49910.75
43	60	60	1680	9.267	478192.81	49991.35
44	60	60	1680	9.267	489313.58	50068.29
45	60	60	1680	9.267	500434.34	50141.81

- Daya Dukung Pondasi

Daya dukung diperhitungkan berdasarkan data tanah yang ada.

Ru = Rp + Rf

= 40 NAp + N/5 As (Varghese, 2012)

Dimana :

Ru = Daya dukung ultimate

Rp = Daya dukung terpusat tiang

Rf = Gaya geser dinding tiang

As = Luas selimut bore pile

= π . D = π . 1,2 = 3.7699 m^2

Tabel 9. 3 Perhitungan Daya Dukung Tiang Abutmen A1

Depth	N-SPT	Rp	Rf	Ru	Ru Tekan		Ru Cabut	
(m)		ton	ton	ton	SF=3	SF=2	SF=3	SF=2
0	0	0.00	0.00	0.00	0.00	0.00	0.00	0.00
1	0	0.00	0.00	0.00	0.00	0.00	0.00	0.00
2	60	2714.34	45.24	2759.57	919.86	1379.79	15.08	22.62
3	60	2714.34	90.48	2804.81	934.94	1402.41	30.16	45.24
4	60	2714.34	135.72	2850.05	950.02	1425.03	45.24	67.86
5	60	2714.34	180.96	2895.29	965.10	1447.65	60.32	90.48
6	60	2714.34	226.19	2940.53	980.18	1470.27	75.40	113.10
7	60	2714.34	271.43	2985.77	995.26	1492.88	90.48	135.72
8	60	2714.34	316.67	3031.01	1010.34	1515.50	105.56	158.34
9	60	2714.34	361.91	3076.25	1025.42	1538.12	120.64	180.96
10	60	2714.34	407.15	3121.49	1040.50	1560.74	135.72	203.58
11	60	2714.34	452.39	3166.73	1055.58	1583.36	150.80	226.19
12	60	2714.34	497.63	3211.96	1070.65	1605.98	165.88	248.81
13	60	2714.34	542.87	3257.20	1085.73	1628.60	180.96	271.43
14	60	2714.34	588.11	3302.44	1100.81	1651.22	196.04	294.05
15	60	2714.34	633.35	3347.68	1115.89	1673.84	211.12	316.67
16	60	2714.34	678.58	3392.92	1130.97	1696.46	226.19	339.29
17	60	2714.34	723.82	3438.16	1146.05	1719.08	241.27	361.91
18	60	2714.34	769.06	3483.40	1161.13	1741.70	256.35	384.53
19	60	2714.34	814.30	3528.64	1176.21	1764.32	271.43	407.15
20	60	2714.34	859.54	3573.88	1191.29	1786.94	286.51	429.77
21	60	2714.34	904.78	3619.11	1206.37	1809.56	301.59	452.39
22	60	2714.34	950.02	3664.35	1221.45	1832.18	316.67	475.01
23	60	2714.34	995.26	3709.59	1236.53	1854.80	331.75	497.63
24	60	2714.34	1040.50	3754.83	1251.61	1877.42	346.83	520.25
25	60	2714.34	1085.73	3800.07	1266.69	1900.04	361.91	542.87
26	60	2714.34	1130.97	3845.31	1281.77	1922.65	376.99	565.49
27	60	2714.34	1176.21	3890.55	1296.85	1945.27	392.07	588.11
28	60	2714.34	1221.45	3935.79	1311.93	1967.89	407.15	610.73
29	60	2714.34	1266.69	3981.03	1327.01	1990.51	422.23	633.35
30	60	2714.34	1311.93	4026.27	1342.09	2013.13	437.31	655.96

Depth	N-SPT	Rp	Rf	Ru	Ru Tekan		Ru Cabut	
(m)		ton	ton	ton	SF=3	SF=2	SF=3	SF=2
31	60	2714.34	1357.17	4071.50	1357.17	2035.75	452.39	678.58
32	60	2714.34	1402.41	4116.74	1372.25	2058.37	467.47	701.20
33	60	2714.34	1447.65	4161.98	1387.33	2080.99	482.55	723.82
34	60	2714.34	1492.88	4207.22	1402.41	2103.61	497.63	746.44
35	60	2714.34	1538.12	4252.46	1417.49	2126.23	512.71	769.06
36	60	2714.34	1583.36	4297.70	1432.57	2148.85	527.79	791.68
37	60	2714.34	1628.60	4342.94	1447.65	2171.47	542.87	814.30
38	60	2714.34	1673.84	4388.18	1462.73	2194.09	557.95	836.92
39	60	2714.34	1719.08	4433.42	1477.81	2216.71	573.03	859.54
40	60	2714.34	1764.32	4478.65	1492.88	2239.33	588.11	882.16
41	60	2714.34	1809.56	4523.89	1507.96	2261.95	603.19	904.78
42	60	2714.34	1854.80	4569.13	1523.04	2284.57	618.27	927.40
43	60	2714.34	1900.04	4614.37	1538.12	2307.19	633.35	950.02
44	60	2714.34	1945.27	4659.61	1553.20	2329.81	648.42	972.64
45	60	2714.34	1990.51	4704.85	1568.28	2352.42	663.50	995.26

Reaksi yang terjadi pada bore pile

P_{tekan} = 1561,95 ton

P_{cabut} = 112,46 ton

Kontrol , $P_{tekan} < Ru_{tekan}$

1561,95 ton < 1568,28 ton **(OK)**

$P_{cabut} < Ru_{cabut}$

112,46 ton < 663,5 ton **(OK)**

9.2. Perencanaan Abutmen A2

Bangunan abutmen A2 jembatan direncanakan dapat menahan beban-beban yang terjadi pada bangunan atas yang dipikul serta beban yang terjadi pada abutmen sendiri.

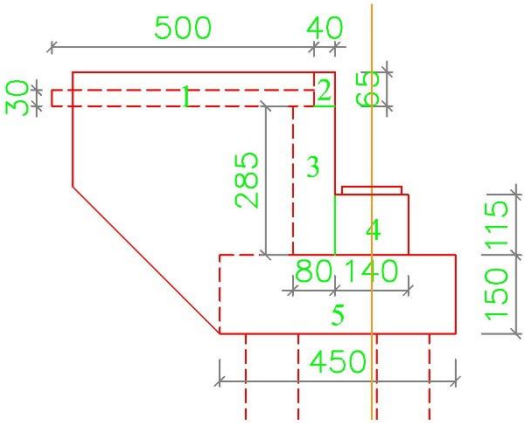

Gambar 9. 5 Dimensi Abutmen A2

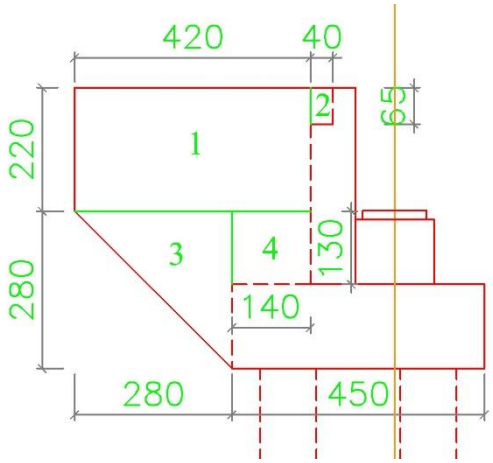

Gambar 9. 6 Dimensi Wingwall A2

9.2.1. Pembebanan Abutmen A2

1. Beban Mati sendiri

Tabel 9. 4 Perhitungan Beban Mati Abutmen A2

	bidang	b	h	L	γ	berat	x	Momen
		(m)	(m)	(m)	t/m^3)	(ton)	(m)	(t-m)
ABUTMEN	1	5	0.3	10	2.5	37.50	3.6	-135.00
	2	0.4	0.65	13	2.5	8.45	0.9	-7.61
	3	0.8	2.85	13	2.5	74.10	1.1	-81.51
	4	1.4	1.15	13	2.5	52.33	0	0.00
	5	4.5	1.5	13	2.5	219	0.70	-153.56
WING WALL	1	4.2	2.2	0.5	2.5	23.10	3.6	-83.16
	2	0.4	0.65	0.5	2.5	0.65	1.3	-0.85
	3	2.8	2.8	0.5	2.5	9.80	3.83	-37.57
	4	1.4	1.3	0.5	2.5	4.55	2.2	-10.01
Timbunan		1.4	2.85	13	1.8	93.366	1.95	-182.06
TOTAL						523.22		-691.32

2. Beban Timbunan

Tinggi Dinding Abutmen , h = 3,5 m

Berat Jenis Tanah, γ = 1,8 t/m^3

Maka nilai beban merata tanah timbunan didapatkan

q = 1.8 t/m^3 x 3,5 m = 6,3 t/m^2

3. Beban Tekanan Tanah

Koefisien Tanah Aktif

φ = 30°

$$Ka = \tan^2\left(45 - \frac{\varphi}{2}\right)$$

$$= \tan^2\left(45 - \frac{30}{2}\right)$$

$$= 0{,}333$$

h ekuivalen abutmen = 0,6 m

q = 0,6 x γ

= 0,6 x 1,8 t/m^3

= 1,08 t/m^2

Tinggi Abutmen , H = 5 m

TA_1 = q x Ka x H

= 1,08 t/m^2 x 0,333 x 5 m

= 1,8 ton/m

TA_2 = ½ x γ x Ka x H^2

= ½ x 1,8 t/m^3 x 0,333 x (5 m)^2

= 7,5 t/m

Momen akibat tekanan tanah aktif

MTA_1 = TA_1 x $\left(\frac{H}{2}\right)$ x b

= 1,8 t/m x $\left(\frac{5\ m}{2}\right)$ x 13 m

= 58,5 tonm

MTA_2 = TA_2 x $\left(\frac{H}{3}\right)$ x b

= 7,5 t/m x $\left(\frac{5\ m}{3}\right)$ x 13 m

= 162,5 tonm

4. Beban Reaksi Akibat Bangunan Atas

Didapatkan dari hasil CSI Bridge pada perletakan

Pu = 188,52 ton

5. Gaya Rem (TB)

- 5% dari beban truk rencana ditambah beban lajur terbagi rata

  TB= 5% x (Beban truk + BTR)

  = 5% x (146,25 kN + 5,625 kN/m^2 x 7 m x 120 m)

  = 243,56 kN

  = 24,356 ton

Momen Akibat Rem

MTB = TB x ($H_{abutmen}$ – H_{box})

= 24,356 ton (5 m – 2 m)

= 73,069 tonm

9.2.2. Kontrol Stabilitas

- Strabilitas Guling

Momen penyebab Guling = MTA_1 + MTA_2

= 58,5 + 162,5

= 221 tonm (A)

Momen Pelawan Guling = 691,32 tonm (B)
Angka keamanan = 1,5

kontrol , $\frac{B}{A}$> 1,5

$\frac{691,32}{221}$ = 3,1 > 1,5 **(OK)**

- Strabilitas Geser

Tanah didasar abutmen

$\phi = 35^o$

Arah x

Gaya penyebab Geser = TA_1 x L+ TA_2 x L
= 1,8 x 13 + 9,075 x 13
= 120,9 ton (A)

Gaya Pelawan Geser = $W_{abutmen}$ tan ϕ
= 523,22 tan (35)
= 366,36 ton (B)

Angka keamanan = 1,5

kontrol , $\frac{B}{A}$> 1,5

$\frac{366,36}{120,9}$ = 3,03 > 1,5 **(OK)**

9.2.3. Penulangan Abutmen A2

1. Penulangan Backwall

B = 0,8 m
h = 2,85 m
cover, d= 50 mm
d' = 750 mm
fc' = 30 Mpa
fy = 320 Mpa

Momen yang terjadi

Mu = ½ TB x h
= ½ x 24,356 ton x 2,85 m
= 34,708 tonm

direncanakan tulangan D19 – 150

Ast = $\frac{¼\,\pi D^2\ x\ b}{s}$ = $\frac{¼\,\pi 19^2\ x\ 1000}{150}$ = 1890,192 mm^2

T = Ast x fy
= 1890,192 mm^2 x 320 N/mm
= 604861,31 N/mm

a $= \frac{T}{0,85.fc'.b} = \frac{604861,31}{0,85x30x1000}$ = 23,72 mm

Momen yang tersedia

Mn $= 0,8\ x\ T\ x(d' - \frac{a}{2})$
$= 0,8\ x\ 604861,31\ \ x(750 - \frac{23,72}{2})$
= 35,718 tonm

kontrol , Mu < Mn
34,708 tonm < 35,718 tonm **(OK)**

Tulangan bagi dipasang 20% tulangan utama
As' = 0,2 x 1890,192 mm^2
= 378,038 mm^2
Direncanakan tulangan D10 – 200

Ast' $= \frac{¼\ \pi D^2\ x\ b}{s} = \frac{¼\ \pi 10^2\ x\ 1000}{200}$ = 392,699 mm^2

Kontrol, As' < Ast'
378,038 mm^2 < 392,699 mm^2 **(OK)**

2. Penulangan Pilar Abutmen
B = 1.4 m
h = 1,15 m
h' = H – $h_{pilecap}$ = 5 – 2 = 3 m
cover, d= 50 mm
d' = 1350 mm
fc' = 30 Mpa
fy = 320 Mpa
Momen yang terjadi

Mu $= \frac{(M1+M2+M3)}{L} + MTB - \frac{1}{2}h'.TA_1 - \frac{1}{3}h'.TA_2$
$= \frac{(125,63+5,49+62,99)}{13} + 73,069\ - \frac{1}{2}3x1,8\ - \frac{1}{3}3x7,5$
= 83,816 tonm

direncanakan tulangan D19 – 100

Ast $= \frac{¼\,\pi D^2\ x\ b}{s} = \frac{¼\,\pi 19^2\ x\ 1000}{100}$ = 2835,287 mm^2

T = Ast x fy

= 2835,287 mm^2 x 320 N/mm

= 907291,958 N/mm

a $= \frac{T}{0{,}85.fc'.b} = \frac{907291{,}958}{0{,}85x30x1000}$ = 35,58 mm

Momen yang tersedia

Mn $= 0{,}8\ x\ T\ x(d' - \frac{a}{2})$

$= 0{,}8\ x\ 907291{,}958\ \ x(1350 - \frac{35{,}58}{2})$

= 96,696 tonm

kontrol , Mu < Mn

83,816 tonm < 96,696 tonm **(OK)**

Tulangan bagi dipasang 20% tulangan utama

As' = 0,2 x 2835,287 mm^2

= 567,057 mm^2

Direncanakan tulangan D10 – 130

Ast' $= \frac{¼\,\pi D^2\ x\ b}{s} = \frac{¼\,\pi 10^2\ x\ 1000}{130}$ = 604,152 mm^2

Kontrol, As' < Ast'

567,057 mm^2 < 604,152 mm^2 **(OK)**

3. Penulangan Pile Cap

B = 4,5 m

h = 1,5 m

cover, d= 100 mm

d' = 4400 mm

fc' = 30 Mpa

fy = 320 Mpa

Momen yang terjadi

Mu = 1/8 x Pu x B

= 1/8 x 188,52 ton x 4,5

= 106,043 tonm

direncanakan tulangan D19 – 250

Ast $= \frac{¼\,\pi D^2\ x\ b}{s} = \frac{¼\,\pi 19^2\ x\ 1000}{250}$ = 1134,115 mm^2

T = Ast x fy

= 1134,115 mm^2 x 320 N/mm

= 362916,783 N/mm

a $= \frac{T}{0{,}85.fc'.b} = \frac{362916{,}783}{0{,}85x30x1000}$ = 14,23 mm

Momen yang tersedia

Mn $= 0{,}8\ x\ T\ x(d' - \frac{a}{2})$

$= 0{,}8\ x\ 362916{,}783\ \ x(4400 - \frac{14{,}23}{2})$

= 127,54 tonm

kontrol , Mu < Mn

106,043 tonm < 127,54 tonm **(OK)**

Tulangan bagi dipasang 20% tulangan utama

As' = 0,2 x 1134,115 mm^2

= 226,823 mm^2

Direncanakan tulangan D10– 300

Ast' $= \frac{¼\,\pi D^2\ x\ b}{s} = \frac{¼\,\pi 10^2\ x\ 1000}{300}$ = 261,799 mm^2

Kontrol, As' < Ast'

226,823 mm^2 < 261,799 mm^2 **(OK)**

4. Penulangan Wingwall Atas

B = 0,5 m

h = 2,2 m

cover, d= 50 mm

d' = 450 mm

fc' = 30 Mpa

fy = 320 Mpa

Momen yang terjadi

Mu = ½ h x TA_1 + 1/3 h x TA_2

= ½ x 2,2 x 1,8 + 1/3 x 2,2 x 7,5

= 7,48 tonm

direncanakan tulangan D16 – 250

Ast $= \frac{¼\,\pi D^2\ x\ b}{s} = \frac{¼\,\pi 16^2\ x\ 1000}{250}$ = 804,25 mm^2

T = Ast x fy

= 804,25 mm^2 x 320 N/mm

= 257359,27 N/mm

a $= \frac{T}{0{,}85.fc'.b} = \frac{257359{,}27}{0{,}85x30x1000}$ = 10,093 mm

Momen yang tersedia

Mn $= 0{,}8\ x\ T\ x(d' - \frac{a}{2})$

$= 0{,}8\ x\ 257359{,}27\ x(450 - \frac{10{,}093}{2})$

= 9,16 tonm

kontrol , Mu < Mn

7,48 tonm < 9,16 tonm **(OK)**

Tulangan bagi dipasang 20% tulangan utama

As' = 0,2 x 804,25 mm^2

= 160,85 mm^2

Direncanakan tulangan D10 – 200

Ast' $= \frac{¼\,\pi D^2\ x\ b}{s} = \frac{¼\,\pi 10^2\ x\ 1000}{200}$ = 392,7 mm^2

Kontrol, As' < Ast'

160,85 mm^2 < 392,7 mm^2 **(OK)**

5. Penulangan Wingwall Bawah

B = 0,5 m

h = 5 m

cover, d= 50 mm

d' = 450 mm

fc' = 30 Mpa

fy = 320 Mpa

Momen yang terjadi

Mu = ½ h x TA_1 + 1/3 h x TA_2

= ½ x 5 x 1,8 + 1/3 x 5 x 7,5

= 17 tonm

direncanakan tulangan D16 – 120

Ast $= \frac{¼\,\pi D^2\ x\ b}{s} = \frac{¼\,\pi 16^2\ x\ 1000}{120}$ = 1675,52 mm^2

T = Ast x fy

= 1675,52 mm^2 x 320 N/mm

= 536165,15 N/mm

a $= \frac{T}{0{,}85.fc'.b} = \frac{536165{,}15}{0{,}85x30x1000}$ = 21,03 mm

Momen yang tersedia

Mn $= 0{,}8\ x\ T\ x(d' - \frac{a}{2})$

$= 0{,}8\ x\ 536165{,}15\ \ x\left(450 - \frac{21{,}03}{2}\right)$

= 18,85 tonm

kontrol , Mu < Mn

17 tonm < 18,85 tonm **(OK)**

Tulangan bagi dipasang 20% tulangan utama

As' = 0,2 x 1675,52 mm^2

= 335,10 mm^2

Direncanakan tulangan D10 – 200

Ast' $= \frac{¼\,\pi D^2\ x\ b}{s} = \frac{¼\,\pi 10^2\ x\ 1000}{200}$ = 392,7 mm^2

Kontrol, As' < Ast'

335,10 mm^2 < 392,7 mm^2 **(OK)**

9.2.4. Analisa Pondasi

Pada abutment A2 data tanah yang digunakan merupakan data pada bore hole BH-3 dapat dilihat pada Gambar 9.7

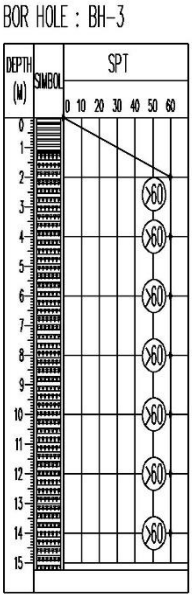

Gambar 9. 7 Data Tanah Bore Hole BH-3

Permodelan parameter tanah dalam program CSI Bridge pada tiang pondasi (*bore pile*) menggunakan konstanta pegas.

$k = k_0 . y^{-1/2}$ (Nakazawa, 2000)

$k_0 = 0{,}2 . E_0 . D^{-3/4}$

$E_0 = 28N$

kx = k x D x dz

$K_v = a . \frac{A_p . E_p}{l}$

a = 0,022(l/D) - 0,05

Direncanakan :

Diameter Bore Pile , D = 1 m

Luas Bore Pile , Ap = 0,785 m^2

y = Besarnya pergeseran yang akan di cari (cm) = 1 cm

Berikut merupakan besaran konstanta pegas yang di input pada tiang pondasi untuk setiap meternya.

Tabel 9. 5 Nilai Spring Abutmen A2

Depth (m)	N-SPT	N rata2	E0 Kg/cm^2	k kg/cm^2	kx ton/m	kv ton/m
0	0	0	0	0.000	0.00	0.00
1	0	0	0	0.000	0.00	-56611.73
2	0	0	0	0.000	0.00	-6065.54
3	0	10	280	1.771	5312.63	10783.19
4	60	50	1400	8.854	35417.51	19207.55
5	60	60	1680	10.625	53126.26	24262.17

- Daya Dukung Pondasi

Daya dukung diperhitungkan berdasarkan data tanah yang ada.

Ru = Rp + Rf

= 40 NAp + N/5 As (Varghese, 2012)

Dimana :

Ru = Daya dukung ultimate

Rp = Daya dukung terpusat tiang

Rf = Gaya geser dinding tiang

As = Luas selimut bore pile

= π . D = π . 1 = 3,142 m^2

Tabel 9. 6 Perhitungan Daya Dukung Tiang Abutmen A2

Depth (m)	N-SPT	Rp ton	Rf ton	Ru ton	Ru Tekan SF=3	Ru Tekan SF=2	Ru Cabut SF=3	Ru Cabut SF=2
0	0	0.00	0.00	0.00	0.00	0.00	0.00	0.00
1	0	0.00	0.00	0.00	0.00	0.00	0.00	0.00
2	60	1884.96	37.70	1922.65	640.88	961.33	12.57	18.85
3	60	1884.96	75.40	1960.35	653.45	980.18	25.13	37.70
4	60	1884.96	113.10	1998.05	666.02	999.03	37.70	56.55
5	60	1884.96	150.80	2035.75	678.58	1017.88	50.27	75.40

Reaksi yang terjadi pada bore pile

P_{tekan} = 316,41 ton

P_{cabut} = -

Kontrol ,

$P_{tekan} < Ru_{tekan}$

316,41 ton < 678,58 ton **(OK)**

9.3. Perencanaan Block Angkur

Blok angkur berfungsi sebagai penahan kabel ke tanah pondasi. Dengan demikian, block angkur akan memikul gaya tarik dan gaya angkat. Maka, Block Angkur perlu sedemikian kokoh agar tidak sampai tergeser, terangkat dan terguling.

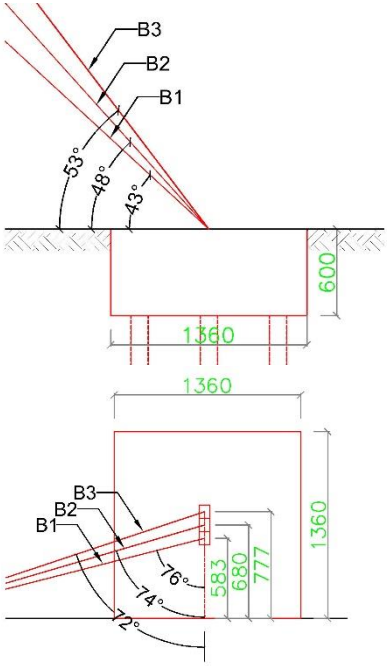

Gambar 9. 8 Dimensi Block Angkur

9.3.1. Gaya – gaya yang bekerja

1. Gaya Tarik Kabel

Tabel 9. 7 Gaya Tarik Kabel Pada Angkur

No	a	sin a	cos a	T(kN)	TH(kN)	TV (kN)
B1	43	0.682	0.731	9141.963	6686.009	6234.804
B2	48	0.743	0.669	10103.630	6760.648	7508.461
B3	53	0.799	0.602	12560.820	7559.290	10031.517
Jumlah					21005.947	23774.781

Tabel 9. 8 Gayah Tarik Kabel Angkur Arah Horizontal

No	b	sin b	cos b	TH(kN)	THy(kN)	THx(kN)
B1	76	0.970	0.242	6686.009	1617.492	6487.406
B2	74	0.961	0.276	6760.648	1863.487	6498.752
B3	72	0.951	0.309	7559.290	2335.949	7189.312
Jumlah					5816.928	20175.470

2. Berat Arah Vertikal

Block Angkur, W_1 = b . h . L . γ

= 13,6 m x 6 m x 13,6 m x 24 kN/m^3

= 26634,24 kN

Bore Pile,W_2 $= \frac{1}{4} . \pi . D^2 . l . \gamma . n$

$= \frac{1}{4} . \pi . (1{,}2m)^2 . 10\ m . 24 \frac{kN}{m^2} . 9$

= 2442,9 kN

Berat Total = W_1+W_2 = 26634,24 kN + 2442,9 kN = 29077,14 kN

3. Tekanan Tanah Aktif

TA = ½ . γ . ka . h^2

= ½ . 17,629 kN/m^3 . 0,271 . (6m)^2

= 85,99 kN/m

9.3.2. Kontrol gaya yang terjadi

1. Gaya Vertikal

Tv < Fv

23774,781 kN < 29077,14 kN **(OK)**

2. Gaya Geser

FH = W x tan (35°) + TA x L

= 29077,14 kN x tan (35°) + 85,99 kN/m x 13,6 m

= 21529,56 kN

Arah x

THx < FH

20175,47 kN < 21529,56 kN **(OK)**

Arah y

THy < FH

5816,928 kN < 21529,56 kN **(OK)**

3. Kontrol Guling

Momen Guling = Tv x b/2
= 23774,78 kN x 13,6 m/2
= 161668,514 kNm

Momen Perlawanan = W_1 x b/2
= 26634,24 kN x 13,6 m/2
= 181112,832 kNm

Kontrol ,

Momen Guling < Momen Perlawanan

161668,514 kNm < 181112,832 kNm **(OK)**

9.3.3. Penulangan Block Angkur

B = 13,6 m

h = 6 m

cover, d= 100 mm

d' = 13500 mm

fc' = 30 Mpa

fy = 320 Mpa

Momen yang terjadi

Mu $= \frac{1}{8}.Tv.B/2$

$= \frac{1}{8}.2377{,}478$ ton $.13{,}6/2$

= 2020,856 tonm

direncanakan tulangan D36 – 150

Ast $= \frac{¼\,\pi D^2\ x\ b}{s} = \frac{¼\,\pi 36^2\ x\ 1000}{150}$ = 6785,84 mm^2

T = Ast x fy

= 6785,84 mm^2 x 320 N/mm

= 2171468,842 N/mm

a $= \frac{T}{0{,}85.fc'.b} = \frac{2171468{,}842}{0{,}85x30x1000}$ = 85,16 mm

Momen yang tersedia

Mn $= 0{,}8\ x\ T\ x(d' - \frac{a}{2})$

$= 0{,}8\ x\ 2171468{,}842\ x\left(13500 - \frac{85{,}16}{2}\right)$

= 2337,79 tonm

kontrol , Mu < Mn
2020,856 tonm < 2337,79 tonm **(OK)**
Tulangan bagi dipasang 20% tulangan utama
As' = 0,2 x 6785,84 mm^2
= 1357,168 mm^2
Direncanakan tulangan D22 – 250
Ast' = $\frac{¼\,\pi D^2\ x\ b}{s}$ = $\frac{¼\,\pi 22^2\ x\ 1000}{250}$ = 1520,531 mm^2
Kontrol, As' < Ast'
335,10 mm^2 < 1520,531 mm^2 **(OK)**

9.3.4. Analisa Pondasi

Data tanah yang digunakan pada block angkur merupakan data tanah pada bore hole BH-1 seperti pada Gambar 9.4.

Permodelan parameter tanah dalam program CSI Bridge pada tiang pondasi (*bore pile*) menggunakan konstanta pegas.

$k = k_0 . y^{-1/2}$ (Nakazawa, 2000)

$k_0 = 0{,}2 . E_0 . D^{-3/4}$

$E_0 = 28N$

kx = k x D x dz

$K_v = a . \frac{A_p . E_p}{l}$

a = 0,022(l/D) - 0,05

Direncanakan :
Diameter Bore Pile , D = 1,2 m
Luas Bore Pile , Ap = 1,131 m^2
y = Besarnya pergeseran yang akan di cari (cm) = 1 cm

Berikut merupakan besaran konstanta pegas yang di input pada tiang pondasi untuk setiap meternya.

Tabel 9. 9 Nilai Spring pada pondasi Block Angkur

Depth	N-SPT	N	E0	k	kx	kv
(m)		rata2	Kg/cm^2	kg/cm^2	ton/m	ton/m
0	0	0	0	0.000	0.00	0.00
1	0	0	0	0.000	0.00	-92196.24
2	0	0	0	0.000	0.00	-19409.73
3	0	10	280	1.545	5560.38	4852.43
4	60	50	1400	7.723	37069.21	16983.52
5	60	60	1680	9.267	55603.82	24262.17

- Daya Dukung Pondasi

Daya dukung diperhitungkan berdasarkan data tanah yang ada.

Ru = Rp + Rf

= 40 NAp + N/5 As (Varghese, 2012)

Dimana :

Ru = Daya dukung ultimate

Rp = Daya dukung terpusat tiang

Rf = Gaya geser dinding tiang

As = Luas selimut bore pile

= π . D = π . 1,2 = 3.7699 m^2

Tabel 9. 10 Perhitungan Daya Dukung Tiang Block Angkur

Depth	N-SPT	Rp	Rf	Ru	Ru Tekan		Ru Cabut	
(m)		ton	ton	ton	SF=3	SF=2	SF=3	SF=2
0	0	0.00	0.00	0.00	0.00	0.00	0.00	0.00
1	0	0.00	0.00	0.00	0.00	0.00	0.00	0.00
2	60	2714.34	45.24	2759.57	919.86	1379.79	15.08	22.62
3	60	2714.34	90.48	2804.81	934.94	1402.41	30.16	45.24
4	60	2714.34	135.72	2850.05	950.02	1425.03	45.24	67.86
5	60	2714.34	180.96	2895.29	965.10	1447.65	60.32	90.48
6	60	2714.34	226.19	2940.53	980.18	1470.27	75.40	113.10
7	60	2714.34	271.43	2985.77	995.26	1492.88	90.48	135.72
8	60	2714.34	316.67	3031.01	1010.34	1515.50	105.56	158.34
9	60	2714.34	361.91	3076.25	1025.42	1538.12	120.64	180.96
10	60	2714.34	407.15	3121.49	1040.50	1560.74	135.72	203.58

Reaksi yang terjadi pada bore pile

P_{tekan} = 315,837 ton

P_{cabut} = 182,76 tom

Kontrol ,

$P_{tekan} < Ru_{tekan}$

315,837 ton < 1040,5 ton **(OK)**

$P_{cabut} < Ru_{cabut}$

182,76 ton < 203,58 ton **(OK)**

9.4. Desain Perletakan

Dengan adanya perletakan akan maka gaya dalam yang terjadi pada struktur atas akan disalurkan ke struktur bawah dan perletakan sendiri sebagai penompang jembatan. Berikut ini adalah layout dari penempatan perletakan yang digunakan.

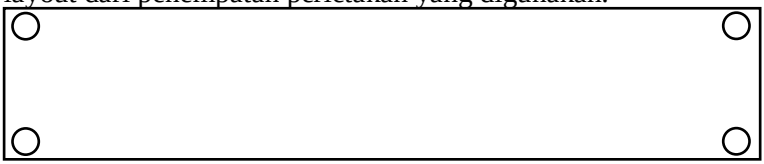

Gambar 9. 9 Layout Penempatan Perletakan

○ = *Fixed pot bearing*

9.4.1. Desain Pot Bearing

Berikut ini adalah model penggunaan *fixed* pot bearing tipe TF Series dapat dilihat pada gambar 9.8.

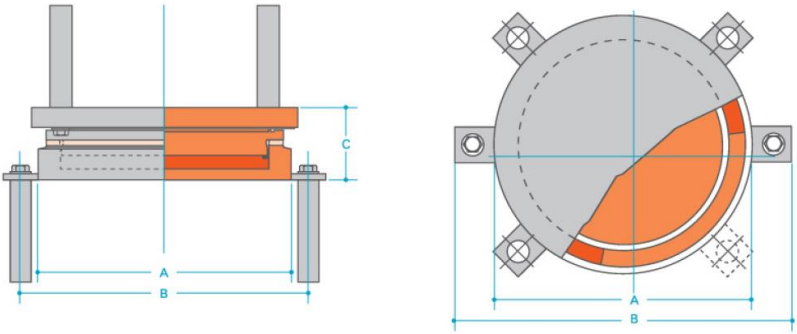

Gambar 9. 10 *Fixed Pot Bearing*

Reaksi yang terjadi pada perletakan :

Vu = 188,521 ton

Hu = 254,8 ton

Tabel 9. 11 Spesifikasi Teknis Pot Bearing

Capacity (Tons)	A (mm)	B (mm)	C (mm)
50	230	290	56
100	300	360	64
150	350	410	72
200	370	430	76
250	420	500	80
300	460	540	87
350	500	580	89
400	530	610	92
450	560	640	97
500	600	680	99
600	640	720	102
700	690	770	110
800	740	820	115
900	780	860	122
1000	820	900	126
1200	900	980	135
1400	980	1060	148
1600	1060	1140	156
1800	1140	1220	160
2000	1220	1300	171
2200	1260	1340	181
2400	1300	1380	195
2600	1340	1440	200
2800	1400	1500	215
3000	1460	1560	225
3500	1520	1620	235
4000	1620	1720	245
4500	1720	1820	262
5000	1820	1920	270

Horizontal force = 15%

Vn = 1800 ton

Hn = 15% x 1800

= 270 ton

kontrol ,

Vu < Vn

188,521 ton < 1800 ton **(OK)**

Hu < Hn

254,8 ton < 270 ton **(OK)**

BAB X
METODE PELAKSANAAN DAN PEMELIHARAAN

10.1. Umum

Pada bab ini akan dibahas *step-by-step* metode pelaksanaan dan pemeliharaan jembatan *cable-stayed*. Pelaksanaan Jembatan Umbul Kaji pada proyek akhir ini akan digunakan metode kantilever.

10.2. Metode Pelaksanaan

10.2.1. Bangunan Bawah

Pelaksanaan bangunan bawah jembatan meliputi pekerjaan penyiapan area kerja jembatan, penentuan titik koordinat bangunan, pekerjaan pondasi borepile, sampai pengecoran abutment dan block angkur.

1. Tahap Persiapan, dalam tahap persiapan terdapat beberapa jenis pekerjaan seperti menyiapkan elevasi tanah rencana dan persiapan alat-alat yang akan digunakan dalam pekerjaan pelaksanaan jembatan.

2. Penentuan Titik Koordinat Bangunan, sebelum melakukan pekerjaan pondasi dilakukan penentuan titik koordinat bangunan agar jembatan yang akan dibangun sesuai dengan elevasi dan koordinat rencana.

3. Pekerjaan Borepile, setelah ditentukan titik koordinat bangunan dilakukan pekerjaan pondasi borepile. Sebelumnya disiapkan terlebih dahulu peralatan dan tulangan borepile yang akan dipasang. Pondasi borepile dicor dengan jumlah dan kedalaman yang sudah direncanakan.

Gambar 10. 1 Ilustrasi Bore Pile

4. Pekerjaan abutment dan block angkur, setelah semua pekerjaan borepile selesai selanjutnya adalah pekerjaan abutment dan block angkur. Tulangan abutment dan block angkur dirangkai sesuai dengan rencana penulangan, kemudian dipasang bekisting serta penempatan pot bearing pada abutment dan fixed angkur pada block angkur, kemudian dicor sesuai dengan perencanaan.

Gambar 10. 2 Ilustrasi Abutment Dan Block Angkur

10.2.2. Metode Pelaksanaan Bangunan Atas

Pelaksanaan bangunan atas meliputi pekerjaan pylon, fabrikasi segmen, pengangkatan segmen, pemasangan segmen, pemasangan kabel, dan pengecoran segmen.

1. Pekerjaan Pylon, setelah pekerjaan abutmen selesai selanjutnya adalah pekerjaan pylon. Tulangan pylon dirangkai sesuai dengan rencana penulangan kemudian dipasang bekisting serta angkur kabel pada pylon dipasang sesuai posisi yang direncanakan. kemudian dilakukan pengecoran secara bertahap hingga ketinggian yang ditentukan.

Gambar 10. 3 Ilustrasi Pylon

2. Fabrikasi Segmen, fabrikasi dapat dilakukan bersamaan dengan pekerjaan pylon sehingga dapat menghemat waktu pekerjaan.

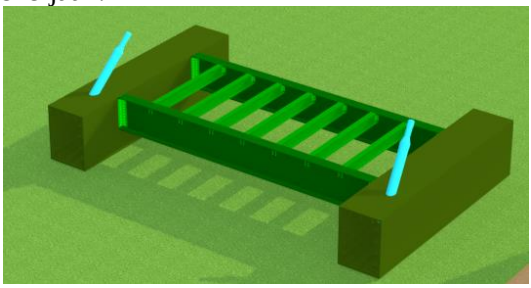

Gambar 10. 4 Ilustrasi Fabrikasi Segmen

3. Pengangkatan Segmen, pengangkatan segmen pertama dilakukan menggunakan tower crane, sedangkan pada segmen kedua hingga segmen 15 menggunakan *Lifting Frame*.

Gambar 10. 5 Ilustrasi Pengangkatan Segmen Pertama

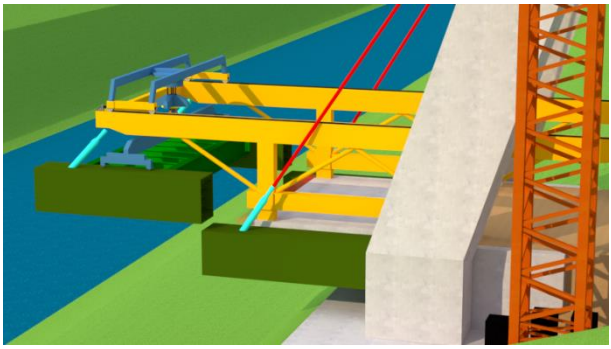

Gambar 10. 6 Ilustrasi Pengangkatan Segmen Kedua

4. Pemasangan Segmen, setelah segmen berada pada posisi yang direncanakan dilakukan pemasangan dengan menyambungkan pada segmen sebelumnya menggunakan baut dan pelat sambung yang sudah direncanakan.

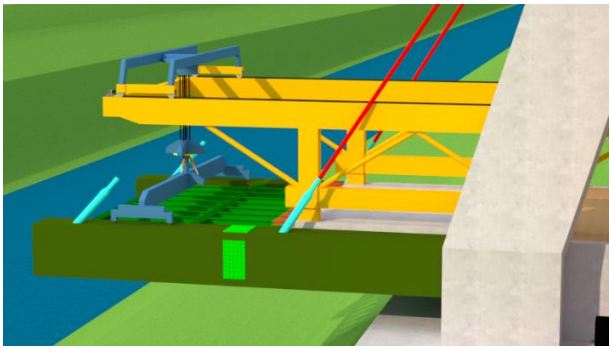

Gambar 10. 7 Ilustrasi Pemasangan Segmen

5. Pemasangan Kabel, setelah segmen tersambung kemudian dilakukan pemasangan kabel dan stressing kabel.

Catatan: Untuk mengatasi pengaruh suhu pada stabilitas kabel pengangkatan dan pemasangan kabel dilakukan pada waktu/jam yang sama.

Gambar 10. 8 Ilustrasi Kabel yang Terpasang

6. Pengecoran Segmen, setelah kabel terpasang selanjutnya adalah pengecoran segmen. Bondek, shear connector dan penulangan dirangkai sesuai dengan perencanaan selanjutnya dipasang bekisting kemudian dilakukan pengecoran.

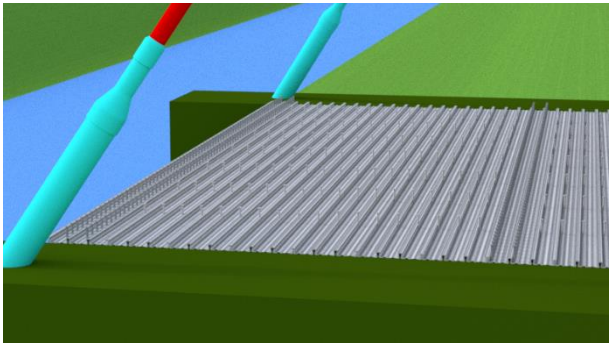

Gambar 10. 9 Ilustrasi Pemasangan Bondek dan Shear Connector

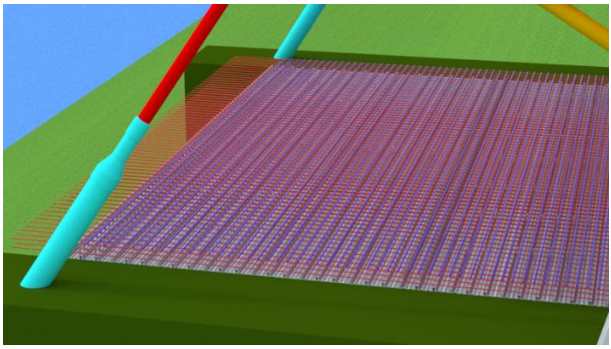

Gambar 10. 10 Ilustrasi Penulangan Segmen

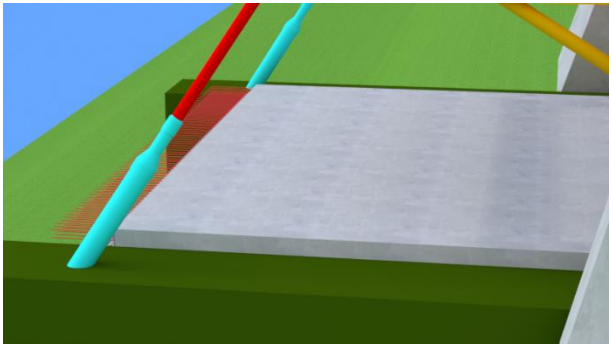

Gambar 10. 11 Ilustrasi Segmen yang sudah dicor

segmen 3 sampai segmen 15 mengulang pekerjaan pada poin 3 hingga poin 6 untuk ilustrasi dapat dilihat pada lampiran.

10.3. Metode Pemeliharaan

Metode pemeliharaan atau rehabilitasi yang digunakan adalah penggantian kabel penahan sebagai berikut :

1) Perancah dipasang di sisi girder dan sisi menara. Buatlah lubang pada tengah jack dan pasang batang penegang di jangkar kabel pada sisi girder.

2) Mengatur winch yang digunakan untuk mengangkat dan menurunkan kabel

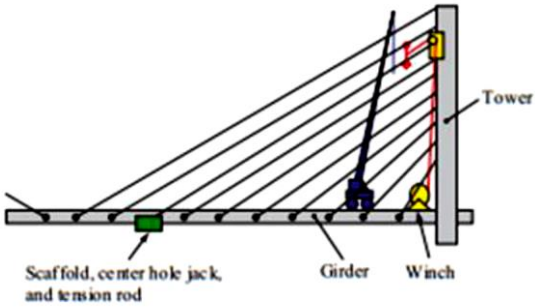

Gambar 10. 12 Mengatur *winch* untuk mengangkat dan menurunkan kabel

3) Memasang *pulley* yang dapat bergerak di sepanjang kabel tepat diatas kabel yang akan diganti.

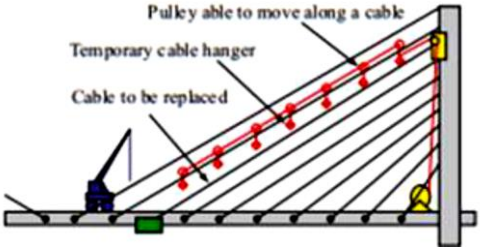

Gambar 10. 13 Memasang *pulley*

4) Pasang dan tegangkan kabel penggantung sementara untuk mendukung berat kabel dengan band ke kabel yang akan diganti.

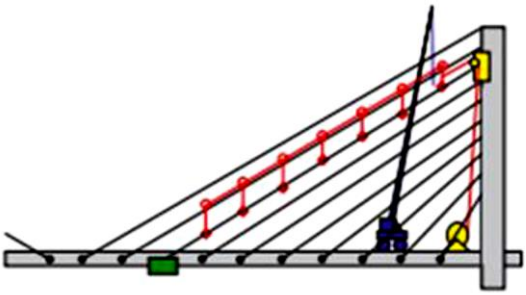

Gambar 10. 14 Memasang Kabel Penggantung Sementara (*Temporary Stay*)

5) Gaya tegangan pada soket sisi gelagar dilepaskan dengan jack lubang tengah, kemudian soket sisi gelagar dilepas dilanjutkan melepas sokel sisi-menara.

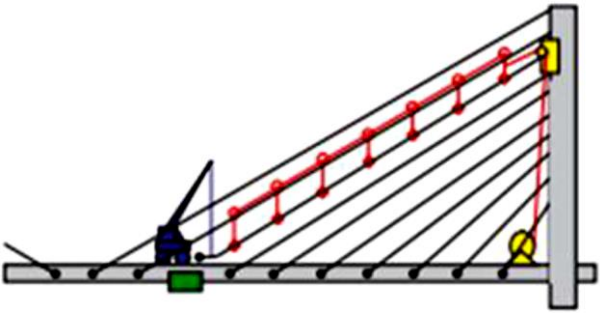

Gambar 10. 15 Melepas Soket Girder

6) Dengan mengendalikan winch, pulleys dilepaskan satu per satu, dan kabel yang akan diganti diturunkan sedikit demi sedikit.

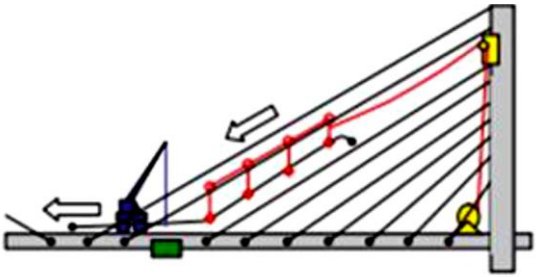

Gambar 10. 16 Penurunan dan Penggantian Kabel

7) Kabel baru dipasang dengan mengikuti prosedur di atas dalam urutan terbalik.

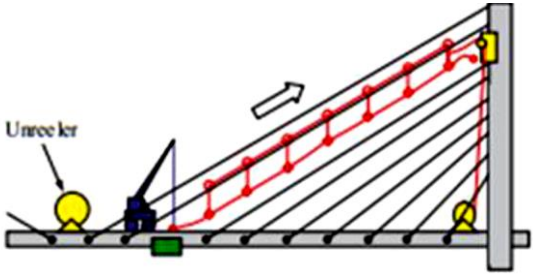

Gambar 10. 17 Pemasangan Kabel yang Baru

Catatan : Lalu lintas kendaraan tidak perlu diberhentikan apabila hanya 1 kabel yang dilakukan pergantian. Namun lalu lintas kendaraan harus diberhentikan apabila terdapat 2 pergantian kabel secara bersamaan dalam satu segmen.

“Halaman ini sengaja dikosongkan”

BAB XI
KESIMPULAN

11.1. Kesimpulan

Setelah dilakukan perhitungan dan analisa perencanaan, dapat ditarik kesimpulan sebagai berikut :

1. Untuk merencanakan bangunan atas dilakukan preliminary design terlebih dahulu, kemudian perencanaan struktur sekunder, selanjutnya analisa gelagar memanjang dan melintang. Kemudian dilakukan permodelan menggunakan program bantu CSI Bridge. Selanjutnya analisa struktur pada steel box girder dan pylon.
2. Untuk merencanakan bangunan bawah dilakukan desain awal abutmen, kemudian analisa pembebanan abutmen, selanjutnya membuat permodelan menggunakan program bantu CSI Bridge, kemudian dilakukan analisa pondasi dan kestabilan struktur.
3. Pembebanan jembatan mengacu pada SNI 1725-2016 yang meliputi beban mati sendiri, beban mati tambahan, beban lajur, beban truk, beban rem,beban pejalan kaki, beban angin, pengaruh suhu dan beban gempa.
4. Analisa stabilitas struktur ditinjau pada lendutan yang terjadi pada gelagar dan lendutan yang terjadi pada pylon. Serta analisa stabilitas guling dan geser pada abutmen.
5. Metode pelaksanaan berupa kantilever dengan menggunakan *form traveler(lifting frame)*. *Staging analysis* menggunakan metode *backward solution* dimana dilakukan pelepasan segmen dari segmen 15 hingga segmen 1. Untuk analisa pemeliharaan dilakukan uji coba satu kabel dilepas bergantian kemudian dilakukan analisa penampang.
6. Penggambaran hasil desain struktur cable-stayed adalah sebagai berikut :
   - Jembatan *cable-stayed* Umbul Kaji memiliki bentang 120 m dimana *pylon* berada pada salah satu ujung jembatan. Konfigurasi kabel arah memanjang menggunakan tipe

Fan-pattern, sedangkan arah melintang menggunakan tipe *double-plane system*.

- Tiang sandaran menggunakan beton bertulang dengan dimensi 0,2 m x 0,2 m x 1,2 m.
- Pipa sandaran berupa profil baja *hollow* dengan Ø76,3 mm
- Pelat lantai kendaraan menggunakan beton dengan ketebalan 0,25 m dan tebal aspal 0,07 m dimana tulangan pada lapangan menggunakan bondek dengan ketebalan 0,9 mm, tulangan pada tumpuan digunakan D16-200.
- Gelagar memanjang dengan profil WF 400.200.8.13, sambungan dengan gelagar melintang berupa sambungan baut dengan diameter Ø20 mm.
- Gelagar melintang dengan profil WF 1200.400.22.36, sambungan dengan gelagar utama berupa baut dengan diameter Ø22 mm.
- Gelagar utama menggunakan *steel box girder rectangular* dengan dimensi 2000.1500.60.60 dengan pengaku 200.20. sambungan antar gelagar utama berupa sambungan baut dengan diameter Ø32 mm.
- Struktur *pylon* dengan dimensi 4 m x 2 m pada bagian bawah, 4 m x 3 m pada bagian atas. Untuk penulangan didapat :

  <u>Pylon bawah</u>
  - Tulangan lentur 88D43
  - Tulangan geser sumbu kuat 3D16 – 300
  - Tulangan geser sumbu lemah 5D16 – 300
  - Tulangan torsi longitudinal 34D43
  - Tulangan torsi tranversal 2D13 – 300

  <u>Pylon atas</u>
  - Tulangan lentur 100D43
  - Tulangan geser sumbu kuat 4D16 – 300
  - Tulangan geser sumbu lemah 5D16 – 300
- Struktur kabel yang digunakan adalah VSL Cable System tipe SSI 2000 dengan jumlah 22 strand pada kabel S1-S8,

29 strand pada kabel S9-S14 dan 98 strand pada kabel B1-B3.

- Bangunan bawah terdiri dari abutmen A1, abutmen A2 dan block angkur. Untuk penulangan bangunan bawah didapat:
  Abutmen A1
  - Backwall D19 – 150
  - Pilar abutmen D19 – 100
  - Pile cap D36 – 150
  - Wingwall atas D16 – 250
  - Wingwall bawah D16 – 150

  Abutmen A2
  - Backwall D19 – 150
  - Pilar abutmen D19 – 100
  - Pile cap D19 – 250
  - Wingwall atas D16 – 250
  - Wingwall bawah D16 – 120

Berikut ini merupakan rekapitulasi perhitungan.

Tabel 11. 1 Rekapitulasi Gaya

Elemen	Gaya	Satuan	Beban	Kapasitas	Ket
Lantai Kendaraan	Momen Lapangan	kNm	87.829	120.883	**OK**
	Momen Tumpuan	kNm	63.461	74.818	**OK**
Gelagar Memanjang	Momen	kgm	29045.63	35670.7049	**OK**
	Geser	kg	26325	50112	**OK**
Gelagar Melintang	Momen	kgm	426352.35	892980	**OK**
	Geser	kg	142706.54	584496	**OK**
Steel Box Girder	Aksial Tarik	kN	52394.96	170330.4	**OK**
	Aksial Tekan	kN	52394.96	168651.67	**OK**
	Geser X	kN	709,98	33210	**OK**
	Geser Y	kN	3030,7	41623,2	**OK**
	Momen X	kNm	20705,22	95681,7	**OK**
	Momen Y	kNm	1722.66	80958.6	**OK**
	Torsi	kNm	2604,41	49357,09	**OK**

Elemen	Gaya	Satuan	Beban	Kapasitas	Ket
Pylon	Aksial Tekan	kN	78455	168651.67	**OK**
	Geser X	kN	709,98	33210	**OK**
	Geser Y	kN	3030,7	41623,2	**OK**
	Momen X	kNm	173487	192416	**OK**
	Momen Y	kNm	2568	4265	**OK**
	Torsi	kNm	89.23	4527	**OK**
Abutmen A1	Guling	tonm	3411.519	17123.07	**OK**
	Geser	ton	1168.716	2834.144	**OK**
	Momen Backwal	tonm	34.708	35.72	**OK**
	Momen Pilar	tonm	95.994	96.696	**OK**
	Momen Pile Cap	tonm	3596.75	3623.3	**OK**
Abutmen A1	Guling	tonm	221	691.32	**OK**
	Geser	ton	120.9	366.36	**OK**
	Momen Backwal	tonm	34.708	35.718	**OK**
	Momen Pilar	tonm	83.816	96.696	**OK**
	Momen Pile Cap	tonm	106.043	127.54	**OK**
Block Angkur	Angkat	kN	23774.78	29077.14	**OK**
	Guling	kNm	161668.5	181112.8	**OK**
	Geser X	kN	20175.47	21529.56	**OK**
	Geser Y	kN	5816.928	21529.56	**OK**
	Momen	tonm	2020.856	2337.79	**OK**

11.2. Saran

Dalam pengerjaan proyek akhir ini masih banyak terdapat kekurangan, maka dari itu hal-hal yang harus diperhatikan agar perencanaan atau desain sejenis dapat lebih baik lagi, hal-hal tersebut antara lain :

1. Dalam menentukan distribusi pembebanan pada saat staging analysis tepatnya pembebanan *form traveler* terhadap lantai kendaran perlu di cek kembali supaya lebih proporsional (mendekati kondisi yang sebenarnya).
2. Untuk keperluan desain jembatan *cable stayed* yang sesungguhnya, perlu dilakukan analisa aerodinamis meliputi vortex-shedding, dan efek flutter, serta menggunakan uji terowongan angin disamping dihitung menggunakan formula empiris untuk mendapatkan hasil yang lebih akurat.

“Halaman ini sengaja dikosongkan”

DAFTAR PUSTAKA

Badan Standardisasi Nasional Indonesia. (2004). *RSNI T-12-2004 Perencanaan Struktur Beton Untuk Jembatan*. Jakarta: BSN.

Badan Standardisasi Nasional Indonesia. (2005). *RSNI T-03-2005 Perencanaan stuktur baja untuk jembatan*. Jakarta: BSN.

Badan Standardisasi Nasional Indonesia. (2013). *Persyaratan Beton Struktural untuk Bangunan Gedung*. Jakarta: BSN.

Badan Standardisasi Nasional Indonesia. (2015). *Pedoman Pelaksanaan Struktur Jembatan Beruji Kabel*. Jakarta: BSN.

Badan Standardisasi Nasional Indonesia. (2016a). *SNI 1725-2016 Pembebanan untuk jembatan*. Jakarta: BSN.

Badan Standardisasi Nasional Indonesia. (2016b). *SNI 2833-2016 Perencanaan Jembatan Terhadap Beban Gempa*. Jakarta: BSN.

Badan Standarisasi Nasional Indonesia. (2015). *SNI-1729-2015: Spesifikasi untuk bangunan gedung baja struktural*. Jakarta: BSN.

Barker, R. M., & Puckett, J. A. (2013). Design of Highway Bridges. In *Design of Highway Bridges* (Third Edit). New Jersey: John Wiley & Sons.

Gunawan, I. R. (1993). *Tabel Profil Konstuksi Baja*. Yogyakarta: KANISIUS.

Irawan, R., & Tristanto, L. (2011). *Perencanaan Teknis Jembatan Cable Stayed*. Bandung: Kementerian Pekerjaan Umum.

Kementerian Pekerjaan Umum. (2015). *Pedoman Perencanaan Teknis Jembatan Beruji Kabel*. Jakarta: Kementerian Pekerjaan Umum.

Ma'arif, F. (2012). *Analisis Struktur Jembatan*. Yogyakarta: Universitas Negeri Yogyakarta.

Nakazawa, K. (2000). *Mekanika Tanah & Teknik Pondasi*. Jakarta: PT Pradnya Paramita.

Olfat S, S. (2012). *Comparison Between Three Types of Cable Stayed Bridges Using Structural Optimization.* The University of Western Ontario.: The University of Western Ontario.

Setiawan, A. (2008). *Perencanaan Struktur baja dengan metode LRFD*. Jakarta: Erlangga.

Supriyadi, & Muntohar. (2007). *Jembatan*. Yogyakarta: Beta Offset.

Troitsky, M. S. (1988). *Cable Stayed Bridges: Theory and Design* (Second). Boston: BSP Professional Books.

Varghese, P. (2012). *FOUNDATION ENGINEERING* (9th ed.). New Delhi: PHI Learning Private Limited.

Walther, R. (1999). *Cable Stayed Bridge Second Edition.* (Second). London: Thomas Telford Publising.

BIODATA PENULIS

Penulis memiliki nama lengkap Aulia Ulul Abshor, lahir di Gresik 15 Maret 1997 yang merupakan anak keempat dari 4 bersaudara. Penulis telah menempuh Pendidikan formal yaitu SDN Campurejo Panceng Gresik, SMPN 1 Sidayu Gresik, SMAN 1 Sidayu Gresik. Setelah lulus dari SMA, Penulis mengikuti Seleksi Masuk ITS(SMITS) dan diterima di Departemen Teknik Infrastruktur Sipil FV-ITS pada tahun 2016 dan terdaftar dengan NRP 10111610013002. Selama masa perkuliahan, Penulis aktif dalam kegiatan kerohanian, Penulis pernah menjadi pengurus organisasi mahasiswa jurusan Jama'ah Masjid Al-Azhar (JMAA). Selain itu, penulis juga aktif dalam kegiatan kepanitiaan yang diselenggarakan oleh HMDS ITS maupun BEM ITS seperti GERIGI ITS pada tahun 2017, D'VILLAGE 7 pada tahun 2017 dan D'VILLAGE 8 pada tahun 2018. Penulis dapat dihubungi melalui email aulia.ipa104@gmail.com

“Halaman ini sengaja dikosongkan”

LAMPIRAN

Permodelan Bangunan Atas

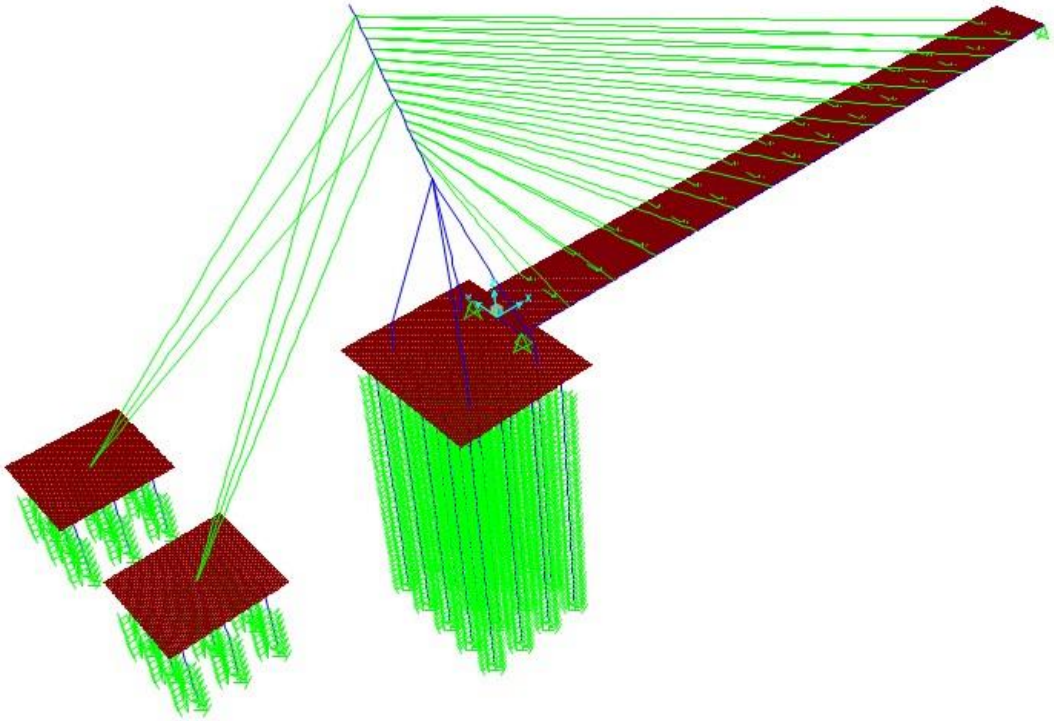

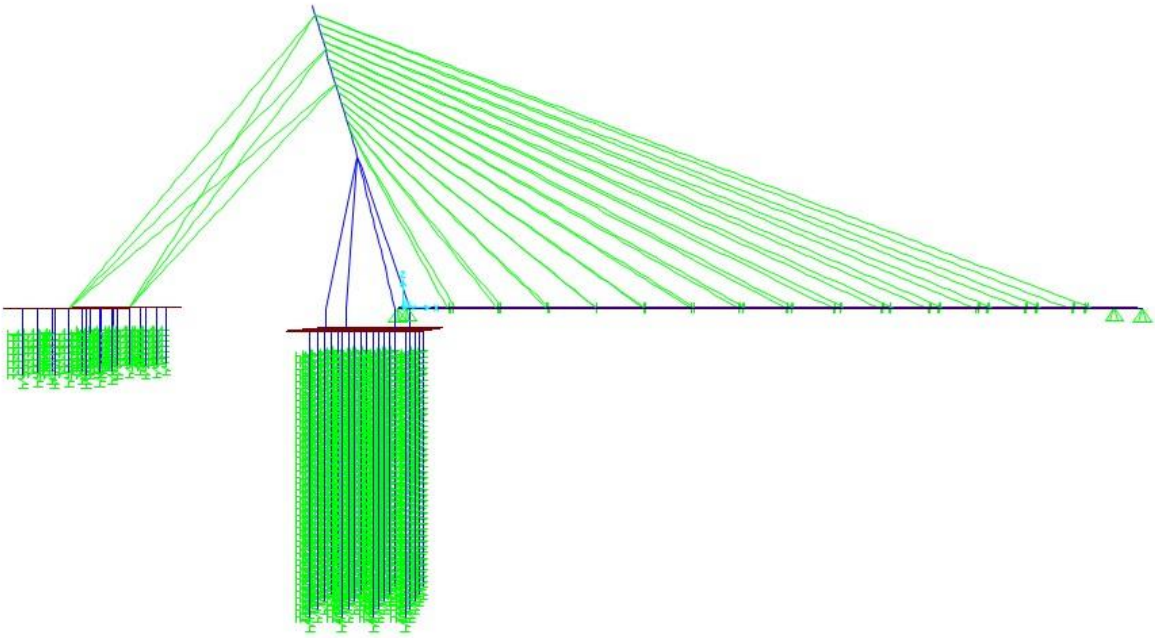

Permodelan Bangunan Bawah

Permodelan Abutmen A1

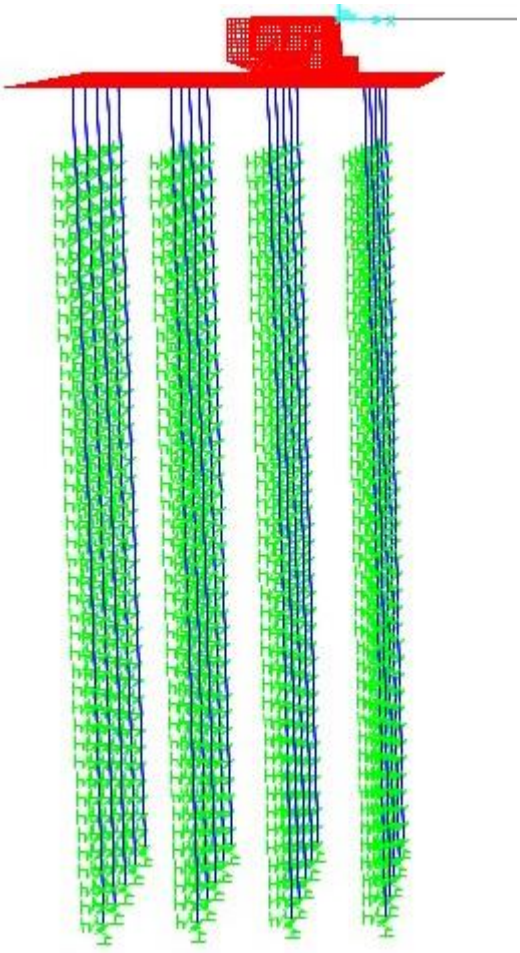

Permodelan Abutmen A2

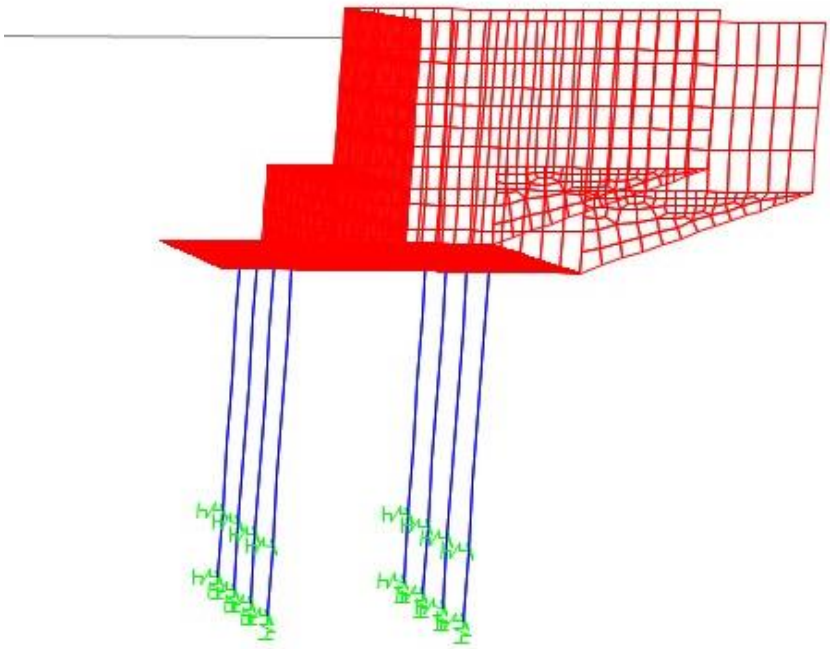

Permodelan Block Angkur

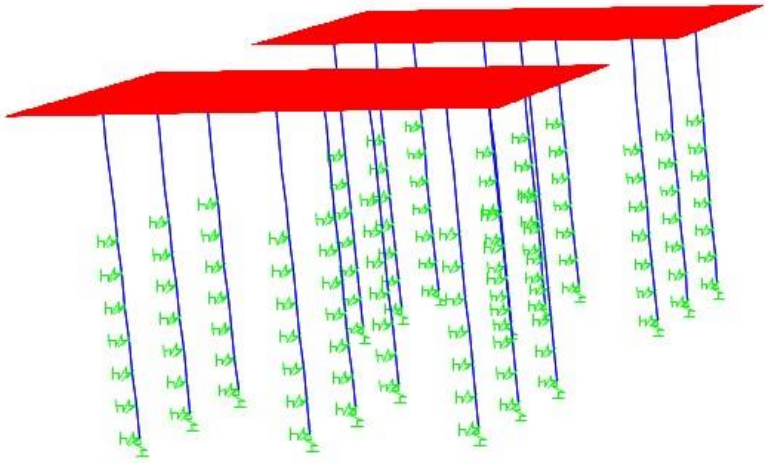

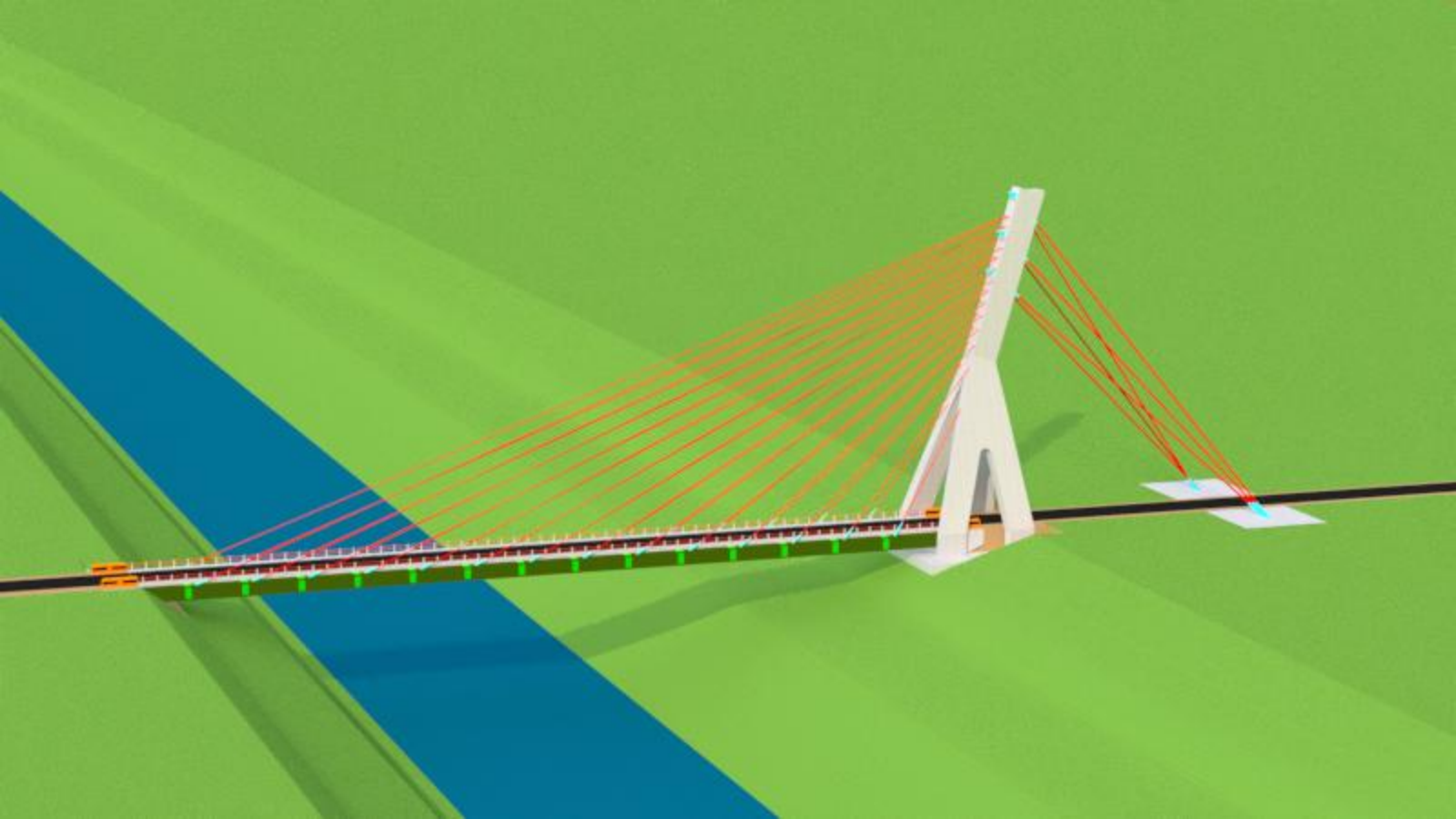

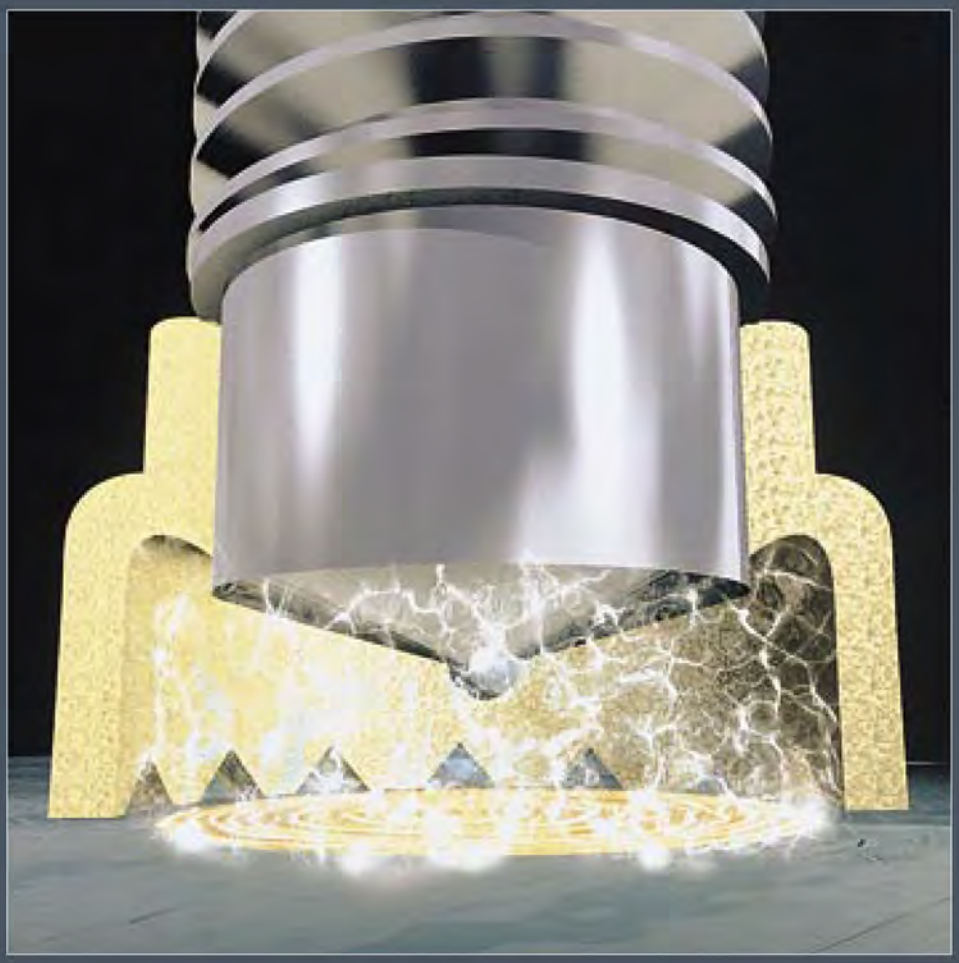

ARCFIX

ARC STUD WELDING

TABLE OF CONTENTS

	Page
Stud Welding Process	1 – 2
Wear Studs	3 – 4
Design Considerations	5
Standard Arc Studs & Part Numbers	6 – 8
Koco Stud Welding Equipment	9 – 10
Koco Stud Welding Guns	11 – 12
Headed Concrete Anchors	13
Headed Shear Connectors	14
Headed Concrete Anchors and Shear Connectors – Standard Sizes	15
Arc Stud Weld Inspection (Visual)	16
Composite Beam Construction	17
Consumables	18

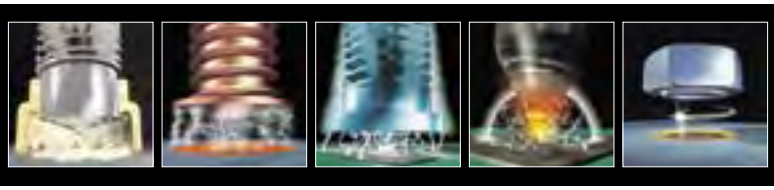

ARCFIX

Drawn Arc
Stud Welding

	Stud welding with ceramic ferrule	Stud welding with shielding gas	Short-cycle stud welding with or without shielding gas
The stud is placed against the workplace.		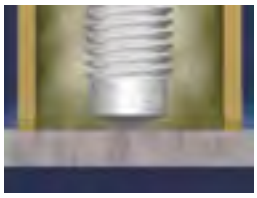	
The stud is lifted off, while current is flowing, thus creating an arc.			
The arc melts the surfaces of stud and workpiece.	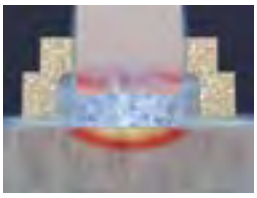	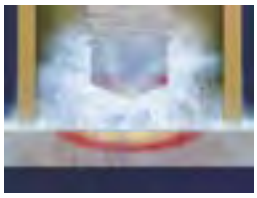	
The stud is plunged into the weld pool.	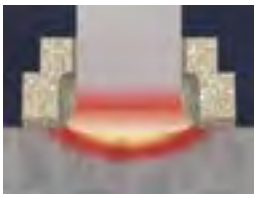	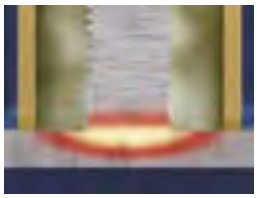	
A cross-sectional joint is achieved.			

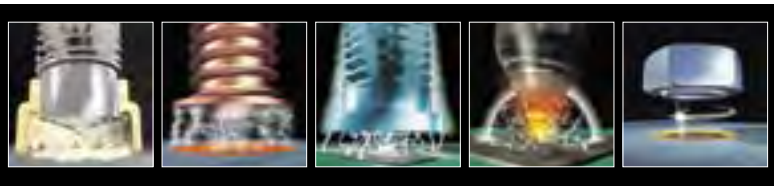

ARCFIX

The Selection of the Process

Process	Stud welding with ceramic ferrule	Stud welding with shielding gas	Short-cycle stud welding	Stud welding with tip ignition
minimum sheet thickness t	1/4 d	1/8 d	1/8 d	1/10 d, min. 0,5 mm
maximum stud diameter d for welding from different positions	↓ 25 ← 16 ↑ 20	↓ 12 (16) ← 6 ↑ 8	↓ 12 ← 8 ↑ 10	↓ 8 ← 8 ↑ 8 (for aluminium 6 in all cases)
suitable surface conditions [1]	bright metal, rolling skin, primer suitable for welding, surface rust, thin layer of oil.	bright metal, rolling skin, primer suitable for welding, surface rust, thin layer of oil zinc coating.	bright metal, rolling skin, surface rust, thin layer of oil, zinc coating.	bright metal, thin layer of oil, galvanised (with a possible limit to the stud diameter.
unsuitable surface conditions [1]	hot dip-galvanising, loose layers of scaling, heavily corroded, protective coating.	loose layers of scaling, heavily corroded, protective coating.	loose layers of scaling, heavily corroded, coating with organic material.	zinc coating of more than 15 µm, coating with organic material, coating with insulating material (e. g. anodised aluminium.
common applications	studs with more than 8 mm ø in steel and boiler construction, and shipbuilding, on surfaces only coarsely cleaned, deep penetration, suitable for field welding.	studs from M 6 to M 12 in downhand position, especially with automatic feeding of studs.	studs from 5 to 10mm ø without shielding of the weld pool in case of average quality requirements for the shape of the weld collar. In case of high-grade requirements, shielding gas should be used.	for thin metal sheets, especially stainless steel and aluminium, and in case of high-grade requirements for an undamaged visible reverse side.

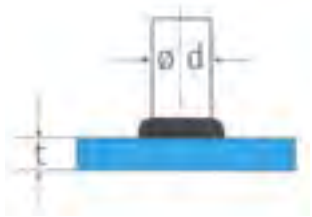

[1] Here, we can give only general hints without any commitment or warranty on our part. The conditions must be tested in each individual case. Basically, a higher degree of surface cleanliness is required for shorter welding times. The best results are always achieved on bright metal surfaces.

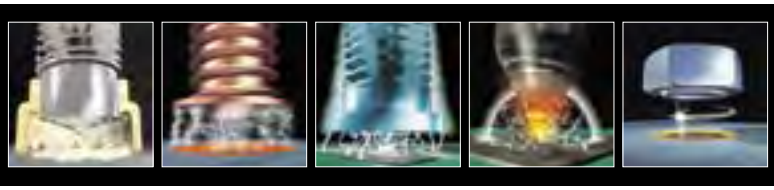

ArcFix
Wear Studs

Applications for this cost cutting technique:

- **Deep Mining Industry**
- **Open Pit Mines**
- **Quarries**
- **Tunneling**
- **Steelworks**
- **Ore Preparing**
- **Repair-shops for building machines**
- **Manufacturers of mining and building machines**

Main benefits:

- **High abrasion resistance**
- **Quick application on site**
- **Permanent protection**

Studs will not pop off, even when shovels or plates buckle.

- **Cost cutting**

In comparison with conventional welding, stud welding takes only a quarter of the time for the same surface. Therefore, you save on electric power, and reduce heat with the consequence of less risk of warping.

M16 Diameter
M20 Diameter
Hardness: 56 - 60 HRc.

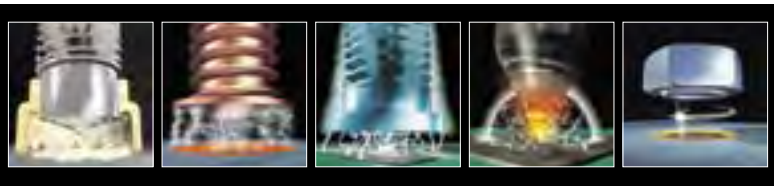

ARCFIX

ArcFix – Wear Studs

Welding gun, light and easy to handle

Insert Abrasion Resistant Stud

Put on ferrule

Place welding gun
pull trigger — finished

Welding process

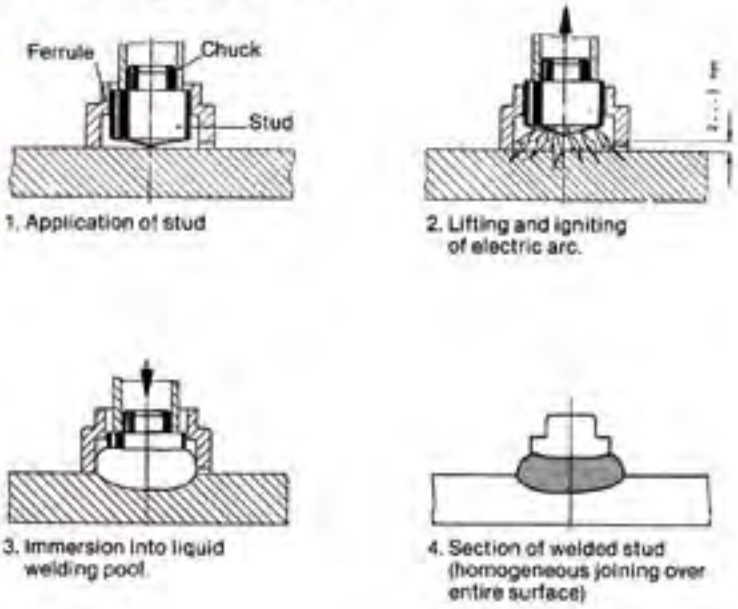

Examples of stud arrangement

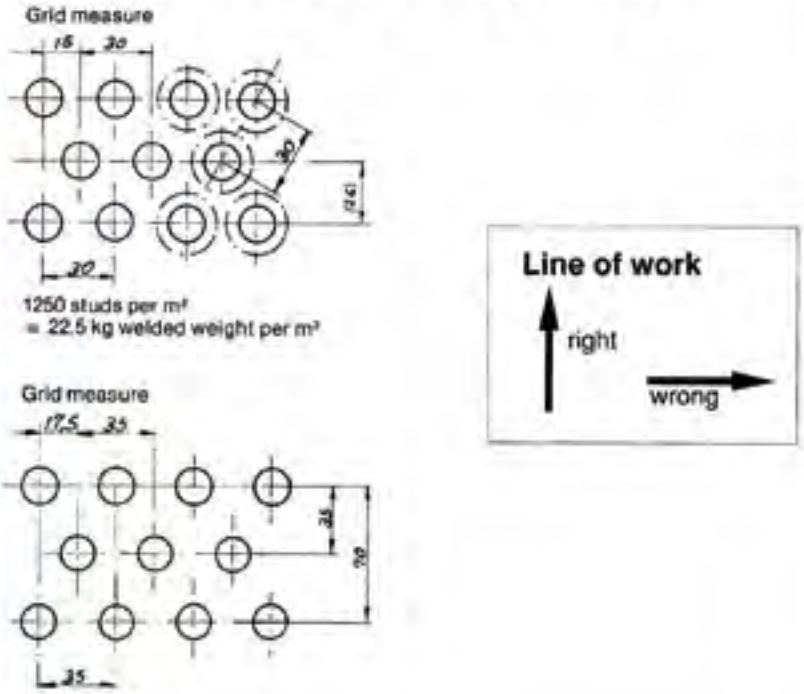

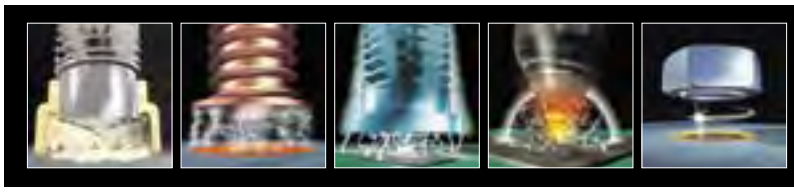

ARCFIX

PRIMARY DESIGN CONSIDERATIONS

PARENT METAL ANALYSIS

ARC stud welding can only be considered if the parent metal is weldable. Proper results can be produced with standard techniques only when low carbon or low alloy steel or austenitic stainless steels are used as parent metals. Other steel alloys can be welded, but may require heat treatment or other special techniques to develop full weld strength.

Some brass, copper and aluminium alloys can also be stud welded. However, brass, copper and exotic metals are best welded by the CD method.

Because there are so many alloys, it is difficult to cover all variations here. When parent metal analysis is questionable, call your ARCFIX sales engineer for help.

Quite often, for instance, weld qualities can only be determined through actual mechanical testing of a prototype sample. We maintain facilities for this purpose and your ARCFIX sales engineer should be called upon to provide sampling and test data service whenever necessary.

Fastener Design Ratio

Our experience has shown that to assure complete fastener strength development, the parent metal thickness should be at least 1/3 of the weld base diameter of the stud.

For application where strength is not the primary requirement, the parent metal thickness may be reduced to a minimum of 1/5 the weld base diameter. By staying above this minimum ratio, complete cross-sectional-area weld fusion without burn-through or excessive distortion of the parent metal, is achievable.

Selecting the Proper Stud

It is impossible to include specifications of all the various styles and sizes that have been produced and are readily available. Therefore, the purchaser is not limited in choice to those shown in the following pages. In order to achieve lowest fastener cost, first consideration should always be given to:

Ordering Studs

Follow “To Order” instructions.

1. Standard stud types
2. Standard lengths and diameters
3. Standard material composition

Standard Studs

Each of the following specification sheets detail stud styles that have been developed through a long history of usage and manufacturing experience. These specifications were developed to establish economical, useful, standard dimensions. The dimensional limits given do not, however, preclude our ability to manufacture stud welding fasteners with dimensions outside the established figures.

Special Studs

Most normal machining operations – cross drilling, slotting, bending, swaging, piercing, etc – are available in combination with many of the studs detailed on the specification sheets. Infinite styles of studs can be produced through these secondary machining operations. Depending upon the application, a special stud may provide even greater in-use economies than a standard stud. Consult your ARCFIX sales engineer: we may already have designed your “special”.

There are many critical dimensions in manufacturing. ARCFIX welding studs give consistent welding results.

One important note: After weld (AWL) length is the length the fastener has been engineered for. However, arc welding studs up through 16mm diameter reduce approximately 3mm in length in the welding process; larger diameters will reduce 5mm. The studs, as shipped, will be correspondingly longer than the desired AW length.

Follow “To Order” instructions given for specific studs ordered:

“To Order”: Specify type of stud; quantity; TxL (AWL) dimensions; type of material and arc shields or any other dimensions necessary.

“ARCFIX ALSO SUPPLY ALUMINIUM ARC STUDS TO ORDER. P.O.A.”

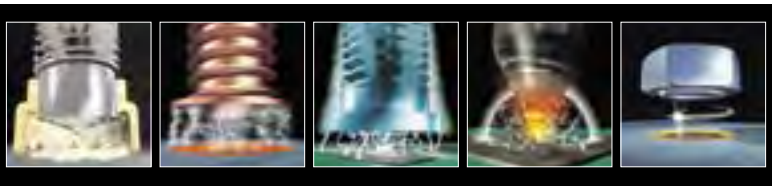

STANDARD ARC STUDS

FULL THREAD (FT)

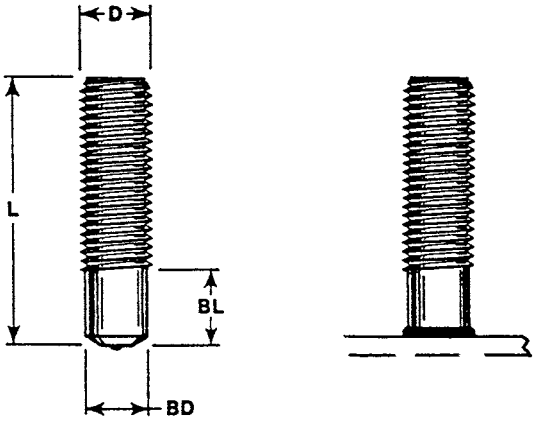

REDUCED BASE (FRB)

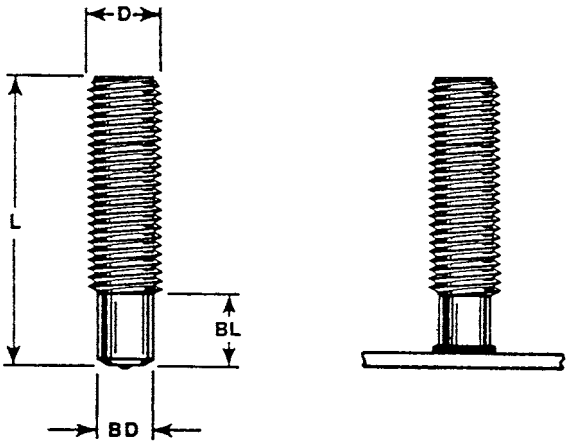

NO THREAD

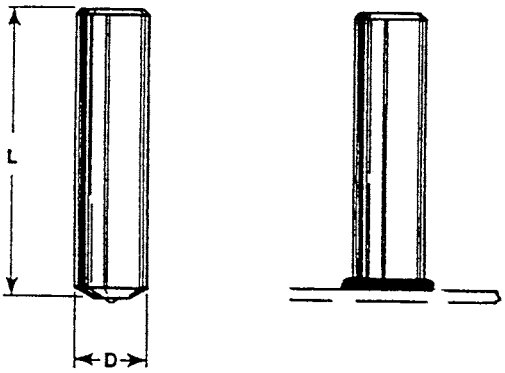

TAPPED THREAD

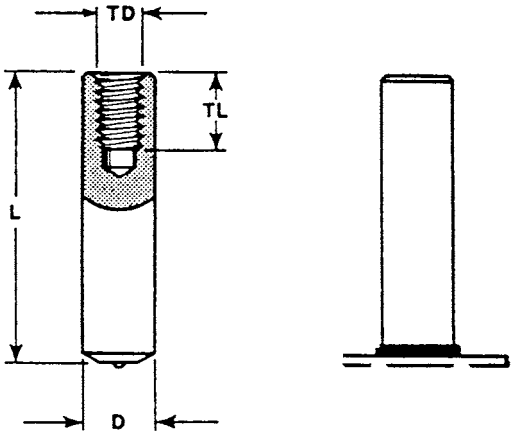

Arcfix Standard Arc Stud Load Strengths

Thread Size	LOW CARBON STEEL			STAINLESS STEEL		
	Fastening Torque (Nm)	Ultimate Tensile (kn)	Ultimate Shear Load (kn)	Fastening Torque (Nm)	Ultimate Tensile (kn)	Ultimate Shear Load (kn)
6mm	5.8	8.9	6.7	8.5	12.8	9.6
8mm	12.6	14.4	10.8	14.9	20.8	15.6
10mm	20.8	21.4	16.1	26.7	30.8	23.1
12mm	45.8	38.9	29.2	58.4	56.9	42.7
16mm	98.3	63.2	47.4	125.4	92.5	68.4
20mm	123.2	93.0	69.7	172.9	133.4	100.1
24mm	187.6	129.0	97.6	263.1	185.6	138.8
Material	C – 0.23% max Mn – 0.60% max	P – 0.04% max S – 0.05% max		AISI grade – 304 Other grades available on request		
Mechanical Properties	Tensile.....380MPa (min) Elongation.....10%			Values for various grades available on request		

These values should be used as a guide only, it is impractical to provide precise torque loadings for all conditions.

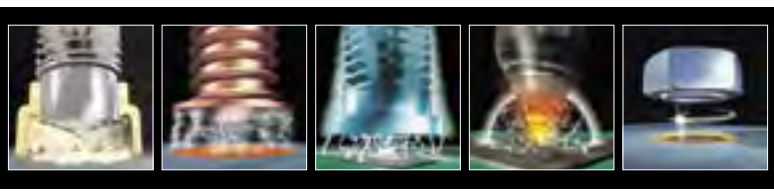

ARCFIX

STANDARD – ARC STUDS & PART NUMBERS

Mild Steel Arc Studs

Length	M6	M8	M10
20mm	AS11-06-020	AS11-08-020	AS11-10-020
25mm	AS11-06-025	AS11-08-025	AS11-10-025
30mm	AS11-06-030	AS11-08-030	AS11-10-030
35mm	AS11-06-035	AS11-08-035	AS11-10-035
40mm	AS11-06-040	AS11-08-040	AS11-10-040
45mm	AS11-06-045	AS11-08-045	AS11-10-045
50mm	AS11-06-050	AS11-08-050	AS11-10-050
55mm	AS11-06-055	AS11-08-055	AS11-10-055
60mm	AS11-06-060	AS11-08-060	AS11-10-060
65mm	AS11-06-065	AS11-08-065	AS11-10-065
70mm			AS11-10-070
75mm			AS11-10-075
80mm			AS11-10-080
85mm			AS11-10-085
90mm			AS11-10-090
95mm			AS11-10-095
100mm			AS11-10-100

Length	M12	M16	M20
20mm	AS11-12-020	AS11-16-020	AS11-20-020
25mm	AS11-12-025	AS11-16-025	AS11-20-025
30mm	AS11-12-030	AS11-16-030	AS11-20-030
35mm	AS11-12-035	AS11-16-035	AS11-20-035
40mm	AS11-12-040	AS11-16-040	AS11-20-040
45mm	AS11-12-045	AS11-16-045	AS11-20-045
50mm	AS11-12-050	AS11-16-050	AS11-20-050
55mm	AS11-12-055	AS11-16-055	AS11-20-055
60mm	AS11-12-060	AS11-16-060	AS11-20-060
65mm	AS11-12-065	AS11-16-065	AS11-20-065
70mm	AS11-12-070	AS11-16-070	AS11-20-070
75mm	AS11-12-075	AS11-16-075	AS11-20-075
80mm	AS11-12-080	AS11-16-080	AS11-20-080
85mm	AS11-12-085	AS11-16-085	AS11-20-085
90mm	AS11-12-090	AS11-16-090	AS11-20-090
95mm	AS11-12-095	AS11-16-095	AS11-20-095
100mm	AS11-12-100	AS11-16-100	AS11-20-100

Add Suffix to Part Number to Indicate Stud Type.

FT = Full Tread **Eg. AS11-12-050FT**

RB = Reduced Base **Eg. AS11-12-050RB**

PT = Part Thread (as per customer request)

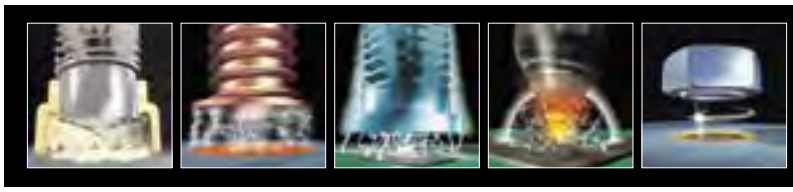

STANDARD – ARC STUDS & PART NUMBERS

Stainless Steel Arc Studs

Length	M6	M8	M10
20mm	AS12-06-020	AS12-08-020	AS12-10-020
25mm	AS12-06-025	AS12-08-025	AS12-10-025
30mm	AS12-06-030	AS12-08-030	AS12-10-030
35mm	AS12-06-035	AS12-08-035	AS12-10-035
40mm	AS12-06-040	AS12-08-040	AS12-10-040
45mm	AS12-06-045	AS12-08-045	AS12-10-045
50mm	AS12-06-050	AS12-08-050	AS12-10-050
55mm	AS12-06-055	AS12-08-055	AS12-10-055
60mm	AS12-06-060	AS12-08-060	AS12-10-060
65mm	AS12-06-065	AS12-08-065	AS12-10-065
70mm			AS12-10-070
75mm			AS12-10-075
80mm			AS12-10-080
85mm			AS12-10-085
90mm			AS12-10-090
95mm			AS12-10-095
100mm			AS12-10-100

Length	M12	M16	M20
20mm	AS12-12-020	AS12-16-020	AS12-20-020
25mm	AS12-12-025	AS12-16-025	AS12-20-025
30mm	AS12-12-030	AS12-16-030	AS12-20-030
35mm	AS12-12-035	AS12-16-035	AS12-20-035
40mm	AS12-12-040	AS12-16-040	AS12-20-040
45mm	AS12-12-045	AS12-16-045	AS12-20-045
50mm	AS12-12-050	AS12-16-050	AS12-20-050
55mm	AS12-12-055	AS12-16-055	AS12-20-055
60mm	AS12-12-060	AS12-16-060	AS12-20-060
65mm	AS12-12-065	AS12-16-065	AS12-20-065
70mm	AS12-12-070	AS12-16-070	AS12-20-070
75mm	AS12-12-075	AS12-16-075	AS12-20-075
80mm	AS12-12-080	AS12-16-080	AS12-20-080
85mm	AS12-12-085	AS12-16-085	AS12-20-085
90mm	AS12-12-090	AS12-16-090	AS12-20-090
95mm	AS12-12-095	AS12-16-095	AS12-20-095
100mm	AS12-12-100	AS12-16-100	AS12-20-100

Add Suffix to Part Number to Indicate Stud Type.

FT = Full Tread **Eg. AS12-12-050FT**

RB = Reduced Base **Eg. AS12-12-050RB**

PT = Part Thread (as per customer request)

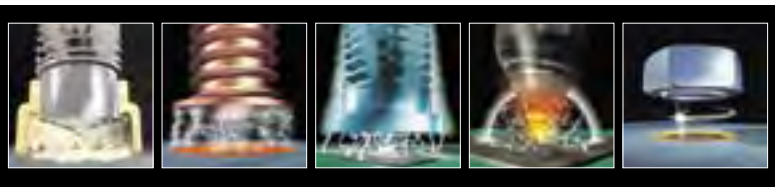

KÖCO – Compact Stud Welding Equipment

ELOTOP

All models of the ELOTOP compact stud welding equipment series are laid out for top performance as well as highly cost-effective drawn-arc stud welding. Through their special features they are designed for rough wear on building sites and continuous operation.

Microprocessor controls, current regulation and high performance ensures precise repeatability and optimum welding results, even under a great variety of conditions.

The intelligent self-diagnosis system increases productivity through minimizing machine downtime.

ELOTOP COMPACT STUD WELDING EQUIPMENT

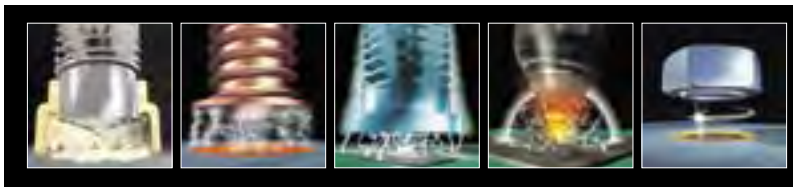

KÖCO – Compact Stud Welding Equipment

SERIES ELOTOP

Technical data	502	802	1002	1702	2002	3002
Stud welding with ceramic ferrule						
Weldable stud range Ø (mm)	3 - 8	3 - 12	3 - 14	3 - 20	3 - 22	6 - 25
Short cycle stud welding						
Weldable stud range Ø (mm)	3 - 6	3 - 8	3 - 10	3 - 12	3 - 12	6 - 12
Stud welding with shielding gas						
Weldable stud range Ø (mm)	3 - 8	3 - 10	3 - 12	3 - 16	3 - 16	3 - 16
Max: current (A)	450	800	1100	1800	2300	3500
Current setting range (A)	450	50 -750	150 - 1000	150 - 1600	300 - 2000	300 -2600
Time setting range (ms)	20 - 450	20 -600	20 - 1000	20 - 1500	20 - 1500	20 -2000
Max. stud/min. at ... Ø (mm)	15/3	32/3	49/3	50/3	52/3	50/6
	4/8	3/12	4/14	2/20	4/22	6/25
Self-diagnosis: overheating	•	•	•	•	•	•
short circuit control	-	-	-	-	-	-
mains phase failure	•	•	•	•	•	•
malfunction of pilot arc	-	•	•	•	•	•
Fully controlled thyristor bridge	-	•	•	•	•	•
Microprocessor control	•	•	•	•	•	•
Constant current regulation	-	•	•	•	•	•
Repeat cycle lock	•	•	•	•	•	•
Mains connection 50/60 Hz 3-phase (V)	400	230/400	230/400	230/400	230/400	230/400
Mains connection special voltages (V)	○	○	○	○	○	○
Mains plug at 400 V (A)	16	32	32	63	63/125	125
4-wire mains cable at 400 V (m/mm^2)	5/2.5	5/4	5/4	5/10	5/16	5/16
Mains fusing time-lag at 230/400 V (A)	35/16	35/25	50/35	100/63	160/80	200/125
Mains power consumption at ...% ED (kVA)	1	1.4/3.2/100	2.5/7/100	2.25/9/100	2.5/7/100	8/13/100
	29	55/38/7	73/43/12	121/59/17	156/93/25	187/145/52
Tolerance range mains voltage (%)	-15/+6	-15/+6	-15/+6	-15/+6	-15/+6	-15/+6
Dust and moisture protection of control unit	•	•	•	•	•	•
Class of protection	IP 23	IP 23	IP 23	IP 23	IP 23	IP 23
Cooling	F	F	F	F	F	F
Steel housing, powder-coated	•	•	•	•	•	•
Housing dimensions (L x W x H) mm	375x220x285	530x305x350	600x325x370	700x415x460	805x430x530	960x610x625
Swivel castors/fixed castors	-	2/2	2/2	2/2	2/2	2/2
Handle	1	2	1	1	1	1
Lifting eye	-	1	1	1	1	1
Weight (abt. kg)	28	50	87	160	185	355
Shielding gas equipment	•	•	•	○	○	○
Stud counter	-	○	○	○	○	○
Interface for automatic components	-	○	○	○	○	○
Stud welding guns: SK 14	•	•	○	○	○	○
K 22	○	○	•	○	○	○
K 22-D	○	○	○	•	○	○
K 24	-	-	-	-	•	○
K 26	-	-	-	-	-	•

• = standard, ○ = optional, - = not available

S Welding under increased electrically hazardous conditions permissible, CE-Labelling according to EN 60974-1 etc.

Upadate 31.3.2006. Subject to technical modifications.

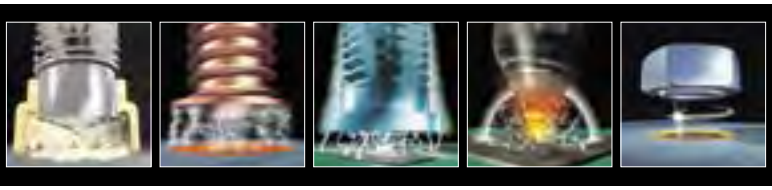

KÖCO – Stud Welding Guns

CLASSIC

The CLASSIC series of stud welding guns are technologically advanced high performance tools for drawn arc stud welding. They are designed for comfortable operation and known for their sturdiness and reliability. The range includes guns for every application, matching accessories are available.

The precision technology of KÖCO stud welding guns ensures repeatability and produces first-class welding results, even under difficult operating conditions.

An adjustable hydraulic plunge damper is standard in the K 22-D, K 24 and K 26 guns, to damp the stud movement when it plunged into the welding pool (recommended for welding studs approx. 14 mm ø).

All guns are compatible with most commercially available stud welding systems.

CLASSIC STUD WELDING GUNS

KÖCO – Stud Welding Guns

SERIES CLASSIC

Technical data	SK 14	K 22	K 22-D	K 24	K 26
Stud welding with ceramic ferrule Weldable stud range Ø (mm)	4 - 12	4 - 14	4 - 19	13 - 22	13 - 25
Short cycle stud welding Weldable stud range Ø (mm)	3 - 12	6 - 12	○	-	-
Stud welding with shielding gas Weldable stud range Ø (mm)	3 - 12	3 - 16	○	-	-
Adjustable hydraulic plunge damper for studs from app. 14 mm Ø	-	○	•	•	•
Lifting ring system with length compensation	-	•	•	•	•
Compensation for stud length variations up to ... (mm)	-	8	8	8	8
Standard support with ... legs	2	2	2	2	3
Lifting range from ... to ... (mm)	1 - 4.5	1 - 4.5	1 - 4.5	2.5 - 6	2.5 - 6
Input voltage lifting coil (V=)	60 - 90	60 - 90	60 - 90	60 - 90	60 - 90
Welding cable (m/mm²)	5/35	2/50	2/50	2/95	2/120
Welding cable plug (mm²)	35	50/70	50/70	95	120
Control cable (m/mm²)	5/4x1.0	2/4x1.0	2/4x1.0	2/4x1.0	2/4x1.0
Control cable pulg (4 wire)	•	•	•	•	•
Body: fibre-glass reinforced polyamide (black)	•	•	•	•	•
Length (excluding chuck) (mm)	185	175	175	250	300
Body Ø approx. (mm)	50	60	60	60	63
Height (including handle) (mm)	150	165	165	220	240
Weight excluding cables app. (kg)	0.9	1.3	1.3	1.4	2.6

• = standard, ○ = optional, - = not available

Upadate 31.3.2006. Subject to technical modifications.

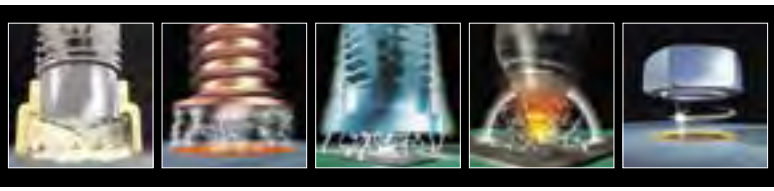

HEADED CONCRETE ANCHOR

General Purpose Studs used for other than shear transfer in composite beam design and construction.

NOTE: L = manufactured length before welding

Shank Diameter (d)	Length (L) tolerance	Head Diameter tolerance	Minimum head height HT
12.7 +0.00 -0.25	±1.6	25.4±0.4	7.1
15.9 +0.00 -0.25	±1.6	31.7±0.4	7.1

DIMENSIONS IN MILLIMETRES

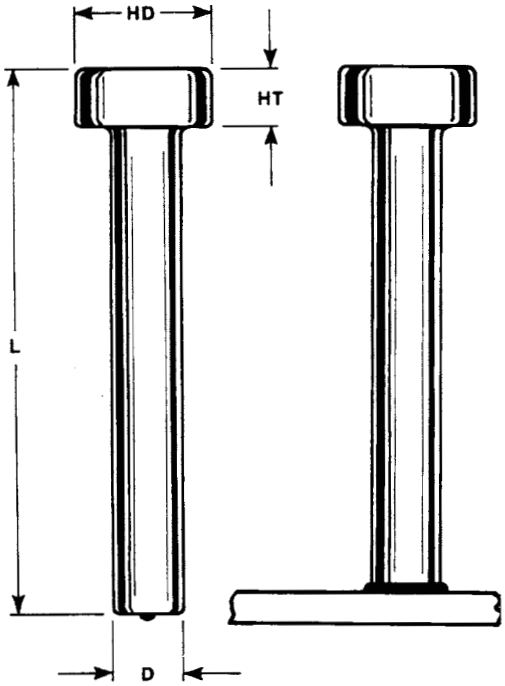

MATERIAL	LOW CARBON STEEL AS1443 S1010 to S1020 or K1010 to K1020
MECHANICAL PROPERTIES	Tensile.....380MPa (min) Elongation.....10%

FERRULE

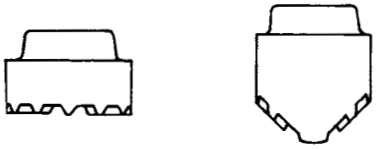

NOTE: Ferrules are component parts of studs

NOT SOLD SEPARATELY

HEADED CONCRETE ANCHORS are available for welding to flat surfaces, inside angles, and outside angles. Each of these applications requires the proper style stud and ferrule, so please specify your application when ordering studs.

Ferrule exterior dimensions available on request.

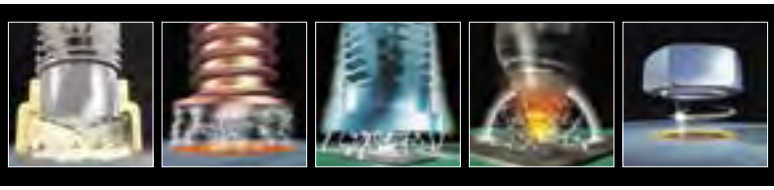

HEADED SHEAR CONNECTORS

Headed Shear Connector are used as an essential component in composite beam design and construction.

NOTE: L = manufactured length before welding

Shank Diameter (d)	Length (L) tolerance	Head Diameter tolerance	Minimum head height HT
19.0 +0.00 -0.38	±1.6	31.7±0.4	9.5
22.2 +0.00 -0.38	±1.6	34.9±0.4	9.5

DIMENSIONS IN MILLIMETRES

MATERIAL	LOW CARBON STEEL AS1445 S1010 to S1020 or K1010 to K1020
MECHANICAL PROPERTIES	Tensile.....410MPa (min) Yield.....345MPa (min) Elongation.....12% Reduction of area.....50% (min)

SPECS: All ARCFIX STUDS MEET AUSTRALIAN STANDARD, AS1554
Test reports available upon request

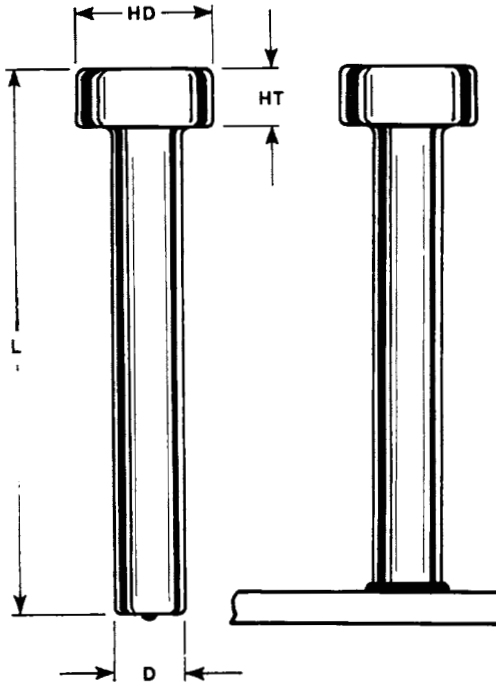

FERRULE

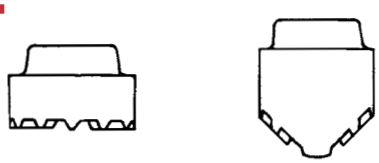

NOTE: Ferrules are component parts of studs

NOT SOLD SEPARATELY

***HEADED SHEAR CONNECTORS** are available for welding to flat surfaces, inside angles, and outside angles. Each of these applications require the proper style stud and ferrule, so please specify your application when ordering studs. Ferrule exterior dimensions available upon request.

FLAT SURFACE

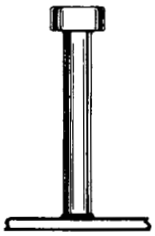

INSIDE ANGLE

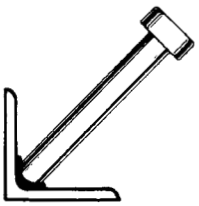

WELD THRU DECK

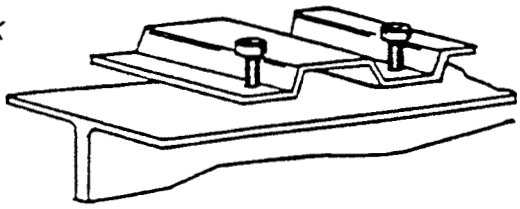

TO ORDER OR SPECIFY GIVE

1. Product Code
2. Diameter
3. Length
4. Material
5. Welding Application

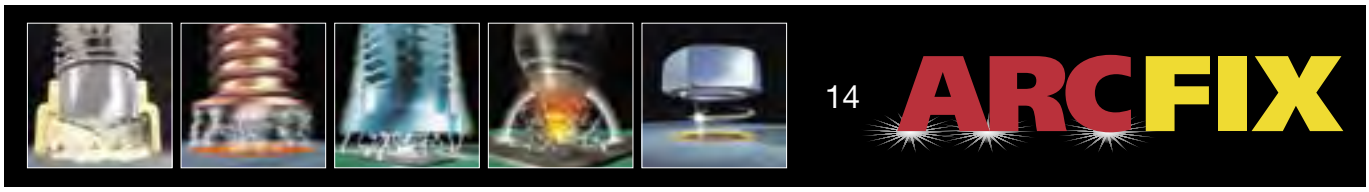

Headed Concrete Anchors and Shear Connectors Standard Sizes

(Dimensions in millimeters)

CONCRETE ANCHORS

Part Number	Size	Weight Ea	Pack Qty
SC11-13-050	12.7 x 50	.079	250
SC11-13-075	12.7 x 75	.104	150
SC11-13-100	12.7 x 100	.129	125
SC11-16-075	16 x 75	.161	125
SC11-16-100	16 x 100	.199	100
SC11-16-150	16 x 150	.278	75

SHEAR CONNECTORS

Part Number	Size	Weight Ea	Pack Qty
SC11-19-075	19 x 75	.217	100
SC11-19-095	19 x 95	.259	75
SC11-19-100	19 x 100	.271	75
SC11-19-105	19 x 105	.281	75
SC11-19-115	19 x 115	.303	60
SC11-19-120	19 x 120	.313	60
SC11-19-125	19 x 125	.329	60
SC11-19-150	19 x 150	.379	50
SC11-19-175	19 x 175	.441	45
SC11-19-200	19 x 200	.485	40
SC11-22-100	22 x 100	.358	50
SC11-22-125	22 x 125	.435	50
SC11-22-150	22 x 150	.505	40
SC11-22-175	22 x 175	.589	40
SC11-22-200	22 x 200	.649	35

ALL THE ABOVE STUDS ARE MANUFACTURED AND NATA TESTED TO AS1554.

CERTIFICATES AVAILABLE ON REQUEST

LENGTHS INDICATED ARE AFTER WELD LENGTHS

ACTUAL LENGTH IS 3 – 5mm LONGER

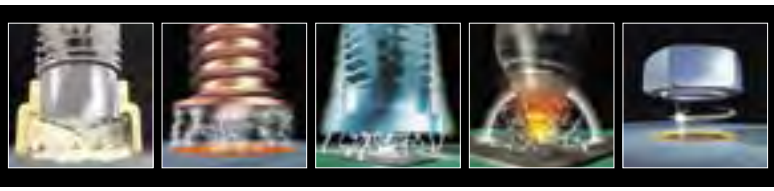

ARC STUD WELD INSPECTION *(VISUAL)*

The ARC stud weld can be visually inspected by observing the fillet at the base of the stud.
The illustrations and comments below will assist you in visually judging the quality of the weld.

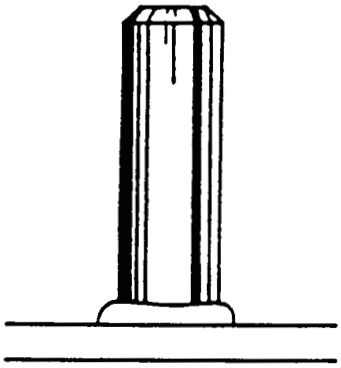

GOOD WELD

Full, even shiny fillet all around stud.

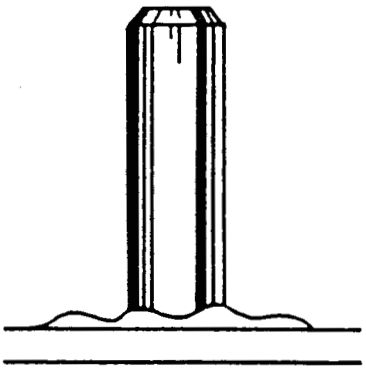

HOT WELD

Very shiny, low profile fillet extruding beyond outside of ferrule.

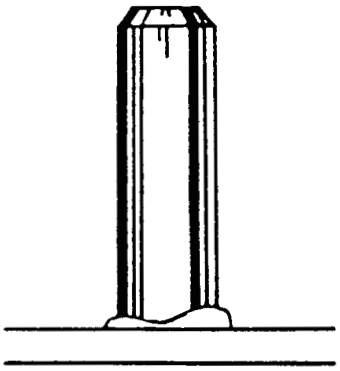

COLD WELD

Small, uneven, dull appearing fillet with fingers of metal extending through vents of ferrule.

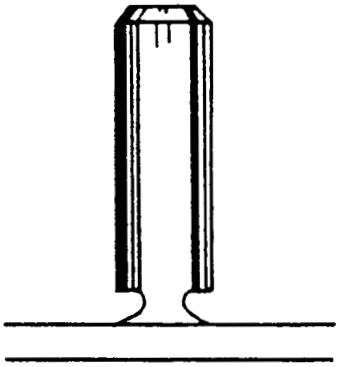

SHORT PLUNGE OR HANG-UP

No fillet, no stud burn-off, or metal.

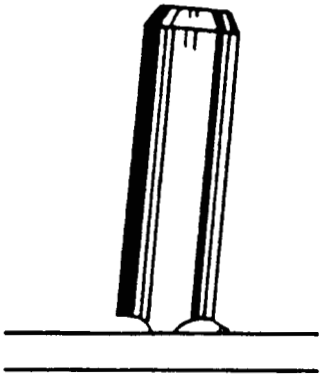

MISALIGNMENT

Partial or no fillet, undercut, stud not perpendicular to base, undercut base.

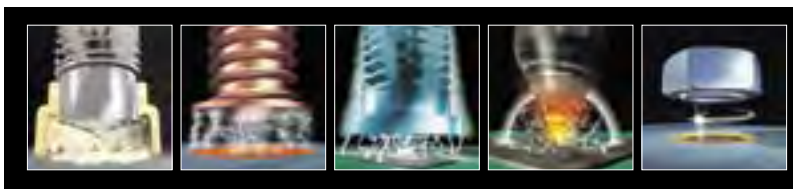

COMPOSITE-BEAM CONSTRUCTION

Even without the use of metal decking, composite beam construction is, in several ways, superior to slab-on-beam construction.

Composite design reduces steel weight.

Live load deflection is reduced because of the concrete's mass and thickness and the steel beam's depth.

Overall building height can be reduced because the beams are shallower – saving on heating, air-conditioning and exterior and interior wall costs.

Longer spans can be used with fewer columns, beams and connections. The results are larger rooms, more useable bay area, and more flexible floor plans. The structure goes up faster; fabrication costs come down.

As stated, these benefits are attainable whether you use metal deck or through-deck welding. Consider, however, how much better composite beam construction is when you DO use metal deck and ARCFIX through-deck welding.

The job costs less. You don't have to erect wood forms then strip them away, then re-erect them. The metal deck which provides a permanent form for the concrete, can also incorporate cellular sections for electrical cables. Ceilings are easier to hang.

You build better. Metal deck provides restraint for supporting members, stiffening the structure and giving better load distribution. The deck minimises deflection, reducing the amount of concrete needed. The concrete, itself, is better because the steel retains hydration needed for proper curing. You'll have fewer cracks, easier inspection.

You build safer. The metal deck provides a safer, more stable platform for workmen of all trades. Metal deck also eliminates a major construction headache – fire in the forms and shoring. Insurance rates are usually lower.

These are typical of the benefits you can look for in composite beam/weld-through metal deck construction. Actual savings will, of course, vary with the job.

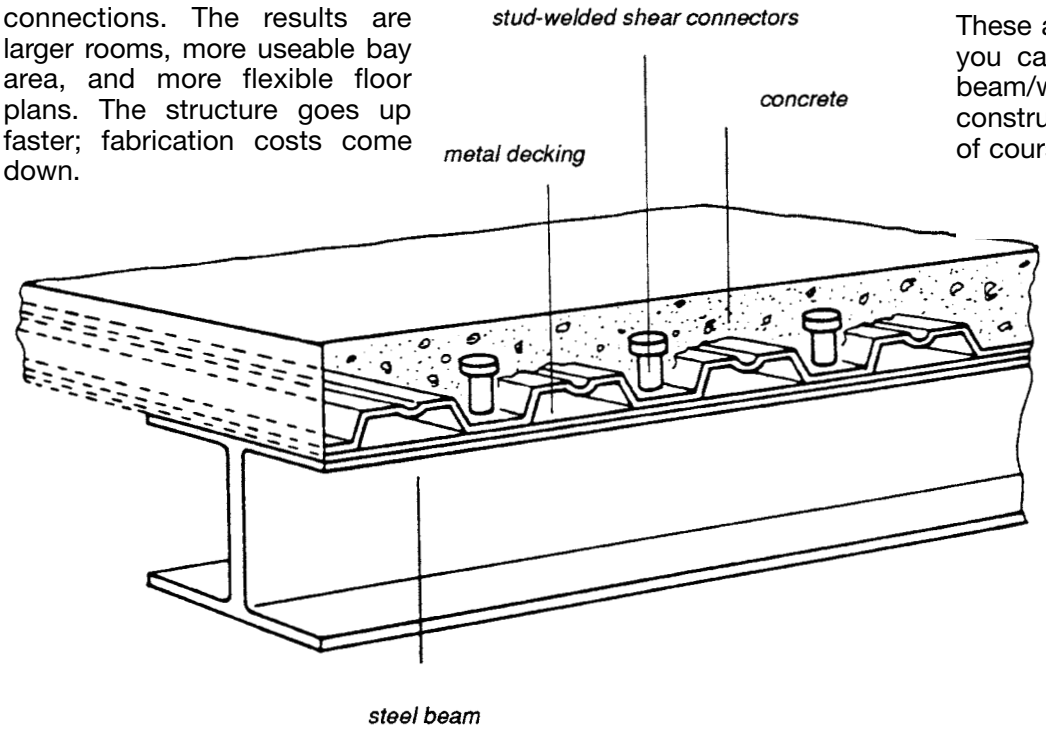

Cross section of a true composite beam: stud welded shear connectors transfer horizontal shear from slab to beam for maximum strength and load-bearing capacity. With most systems, as shown here, the metal deck provides a positive bond because of the "keying" of the concrete with the deck ribs. Accordingly, the deck itself can replace all or part of the bottom layer of reinforcing steel, for further economy.

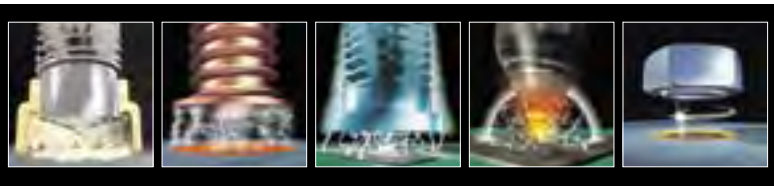

CONSUMABLES

SET-UPS STANDARD

For threaded & non-threaded studs

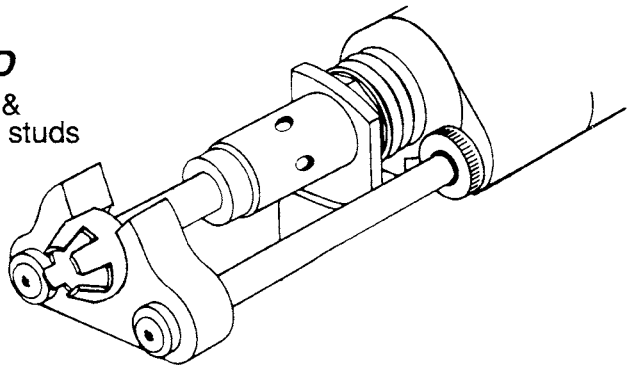

REFRACTORY ANCHOR

For bullhorn & "Y"-refractory anchors

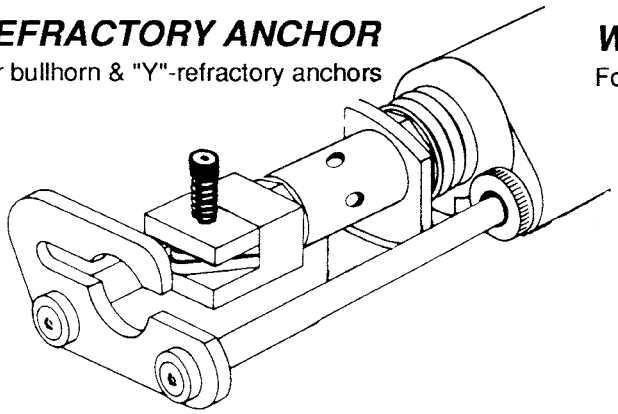

WELD THRU DECK

For welding headed anchors thru corrugated decking

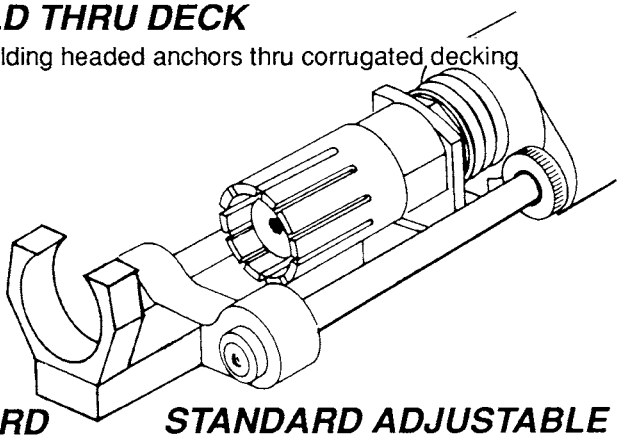

HEADED CONCRETE ANCHOR & SHEAR CONNECTOR CHUCKS

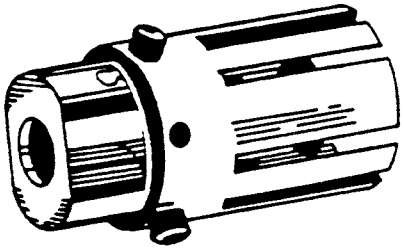

STANDARD FERRULE GRIPS

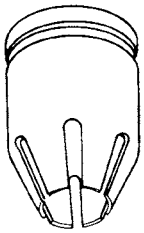

STANDARD ADJUSTABLE ARC CHUCKS

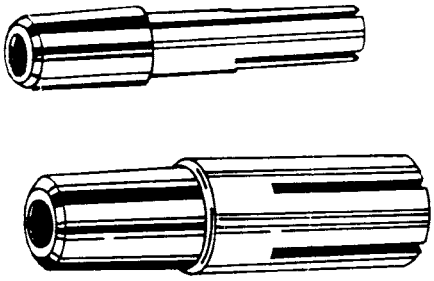

RA-Y CHUCKS

These chucks are used for stud welding "y" style refractory anchors with an 80° bend angle, such as Positgrip, Bullhorn, and Y-Anchors

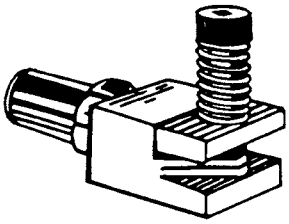

WELD THRU DECK EXTENSION FOOT

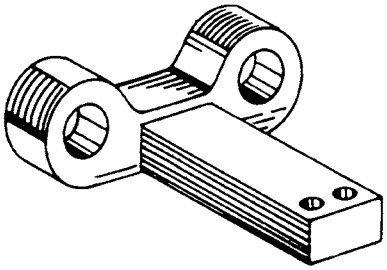

WELD THRU DECK FERRULE GRIP

(For use with weld thru deck extension foot)

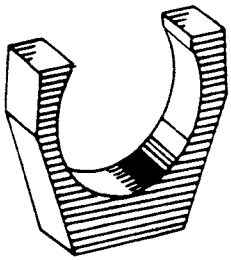

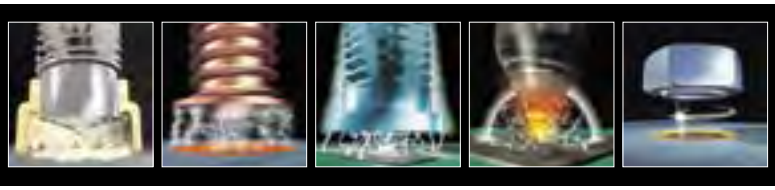

ARCFIX

Stud Welding

Shear Connectors

Threaded Arc Studs

CD Studs

CD Pins & Clips

CD Welding Machines

Arc Stud Welding Machines

Stud Welding Machine Spares & Repairs

Distributed in Australia by

Antec Engineering Pty Limited

Web: antec.com.au
Ph: 1300 55 34 73
Email: anteceng@antec.com.au

NSW: 02 9622 9622
VIC: 03 8645 3222
QLD: 07 3420 4099
WA: 08 6350 9600
SA: 08 8162 8700

BONDEK® STRUCTURAL STEEL DECKING

DESIGN AND CONSTRUCTION GUIDE FOR BUILDING PROFESSIONALS

PREFACE

Lysaght presents this new publication on LYSAGHT BONDEK®. We upgraded this document and design and construction information for the latest standards and construction practices.

- AS 3600:2009
- AS/NZS 1170.0:2002
- Simplified uniform arrangement for mesh and bars

Our newest release of supporting software and the Design and Construction Manual for BONDEK® Structural Steel Decking incorporates Lysaght's latest research and development work. Improved design and testing methods have again pushed BONDEK® Structural Steel Decking to the forefront. New formwork tables are optimised for steel frame construction but are also suitable for concrete frame construction and masonry walls. Call Steel Direct on 1800 641 417 to obtain additional copies of the Design and Construction Manual and Users Guide for BONDEK® Design Software. The software can be downloaded by visiting:

www.lysaght.com/bondekdesignsoftware

The following is an overview of this manual. It is structured to convey the subject in a comprehensive manner. This manual consists of eight sections. Section 1 presents the general introduction of the BONDEK® and is followed by purpose and scope in Section 2. Formwork design in Section 3 discusses the concept of designing BONDEK® as a formwork. Section 4 presents the concept of designing BONDEK® as a composite floor slab while Section 5 discusses design of composite slab in fire. Design tables for steel framed construction are presented in Section 6. Construction and detailing issues are presented in Section 7. Relevant list of references are presented in Section 8. Finally, material specifications are documented in Appendix A.

We recommend using this manual's tables for typical design cases. If the appropriate table is not in this manual, try the BONDEK® design software, and BONDEK® design software user's guide, which are available separately through Steel Direct or contact your local technical representative.

These developments allow you to make significant improvements compared with the design methods we previously published for slabs using BONDEK®.

CONDITIONS OF USE

This publication contains technical information on the following base metal thicknesses (BMT) of BONDEK®:

- 0.6mm thickness
- 0.75mm thickness
- 0.9mm thickness (Availability subject to enquiry)
- 1.0mm thickness

WARRANTIES

Our products are engineered to perform according to our specifications only if they are installed according to the recommendations in this manual and our publications. Naturally, if a published warranty is offered for the product, the warranty requires specifiers and installers to exercise due care in how the products are applied and installed and are subject to final use and proper installation. Owners need to maintain the finished work.

WARNING

Design capacities presented in this Manual and LYSAGHT® software are based on test results. They shall not be applicable to any similar products that may be substituted for BONDEK®. The researched and tested design capacities only apply for the yield stress and ductility of DECKFORM® steel strip supplied by BlueScope Steel and manufactured by Lysaght to the BONDEK® profile specifications.

For public safety only BONDEK® can be certified to comply with Australian, International standards and the Building Code of Australia in accordance with the product application, technical and specification provisions documented in this Design and Construction Manual.

TECHNICAL SUPPORT

Contact Steel Direct on 1800 641 417 or your local LYSAGHT® Technical Sales Representative to provide additional information.

Contents

1.0 Introducing BONDEK® 4
2.0 Purpose and scope of this publication 6
3.0 Formwork design 7
3.1 Introduction 7
3.2 Recommended deflection limits 7
3.3 Loads for design 7
3.4 Use of spanning tables 7
3.5 BONDEK® maximum slab spans 9
4.0 Composite slab design 14
4.1 Introduction 14
4.2 Design loads 14
4.2.1 Strength load combinations 14
4.2.2 Serviceability load combinations 14
4.2.3 Superimposed dead load 14
4.3 Design for strength 14
4.3.1 Negative bending regions 14
4.3.2 Positive bending regions 14
4.4 Design for durability and serviceability 14
4.4.1 Exposure classification and cover 14
4.4.2 Deflections 14
4.4.3 Crack control 14
4.5 Detailing of conventional reinforcement 15
4.6 Use of tables given in Section 6 16
5.0 Design for fire 17
5.1 Introduction 17
5.2 Fire resistance periods 17
5.3 Design for insulation and integrity 17
5.4 Design for structural adequacy 17
5.4.1 Design loads 17
5.4.2 Design for strength 17
5.5 Reinforcement for fire design 17
6.0 Design tables - steel-framed construction 19
6.1 Use of design tables 19
6.2 Interpretation of table solutions 20
6.3 Single span tables 21
6.4 Interior span tables 23
6.5 End span tables 28
7.0 Construction and detailing 33
7.1 Safety 33
7.2 Care and storage before installation 33
7.3 Installation of BONDEK® sheeting on-site 33
7.3.1 Propping 33
7.3.2 Laying 34
7.3.3 Interlocking of sheets 34
7.3.4 Securing the sheeting platform 34
7.3.5 Installing BONDEK® on steel frames 34
7.3.6 Installing BONDEK® on brick supports 35
7.3.7 Installing BONDEK® on concrete frames 36
7.3.8 Provision of construction and movement joints 36
7.3.9 Fastening side-lap joints 36
7.3.10 Cutting and fitting Edgeform 36
7.3.11 Cutting of sheeting 37
7.3.12 Items embedded in slabs 37
7.3.13 Holes in sheeting 38
7.3.14 Sealing 38
7.3.15 Inspection 38
7.4 Positioning and support of reinforcement 39
7.4.1 Transverse reinforcement 39
7.4.2 Longitudinal reinforcement 39
7.4.3 Trimmers 39
7.5 Concrete 40
7.5.1 Specification 40
7.5.2 Concrete additives 40
7.5.3 Preparation of sheeting 40
7.5.4 Construction joints 40
7.5.5 Placement of concrete 40
7.5.6 Curing 40
7.5.7 Prop removal 40
7.6 Finishing 41
7.6.1 Soffit and Edgeform finishes 41
7.6.2 Painting 41
7.6.3 Plastering 41
7.6.4 Addition of fire protective coating 41
7.7 Suspended ceilings and services 42
7.7.1 Plasterboard 42
7.7.2 Suspended ceiling 42
7.7.3 Suspended services 42
7.8 Fire stopping detailing 42
7.8.1 At reinforced block walls 42
7.8.2 Fire collars 42
7.9 BONDEK® in post tensioned concrete framed construction 43
7.9.1 BONDEK® PT clip (post tensioned) 43
7.9.2 BONDEK® rib removal at PT anchor points or stressing pans 43
7.9.3 Positioning of PT duct/cables in transverse direction 43
7.10 Architectural matters 44
7.11 Accessories 45
8.0 References 46
Appendix A: Material specifications 47

BONDEK® STRUCTURAL STEEL DECKING

1. Introducing BONDEK®

Figure 1.1

BONDEK® profile.

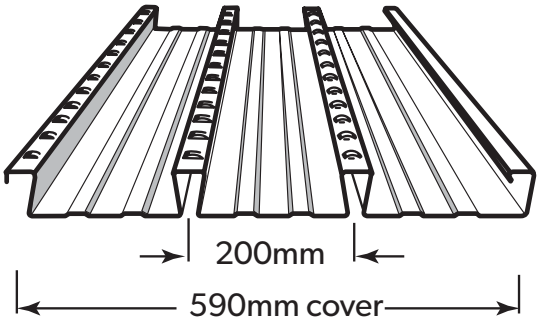

BONDEK® is a highly efficient, versatile and robust formwork, reinforcement and ceiling system for concrete slabs. It is a profile steel sheeting widely accepted by the building and construction industry to offer efficiency and speed of construction.

New design rules have been developed for the design of BONDEK® acting as structural formwork for the construction of composite and non-composite slabs (where BONDEK® is used as lost formwork). The rules for calculating moment capacities are based on testing performed at LYSAGHT® Research & Technology facility at Minchinbury.

The data obtained allowed us to include moment capacities in negative regions based on partial plastic design model. As a consequence, the span limits that previously applied to BONDEK® have been increased by up to 8%.

The typical BONDEK® profile and dimension of a cross section of composite slab is given in Figure 1.1 and 1.2 respectively. The section properties and the material specifications are given in Table 1.1 and 1.2 respectively.

BONDEK® is roll-formed from hot dipped, zinc coated, high tensile steel. The steel conforms to AS 1397, grade G550 with Z350 and Z450 coatings.

BONDEK® has superior spanning capacities. 1.0mm BMT BONDEK® can be used as a permanent formwork spanning up to 3.6m unpropped used in steel-framed construction. BONDEK® provides efficient reinforcement in slab construction for steel-framed buildings, concrete framed buildings and in buildings with masonry load bearing walls. The excellent shear bond resistance developed between BONDEK® ribs and concrete enables highly efficient composite action to be achieved in a composite BONDEK® slab.

BONDEK® composites slabs can be designed to achieve a fire-resistance of up to 240 minutes. For fire resistance levels of 90 and 120 minutes, the BONDEK® ribs contribute significantly to the resistance of the slab in fire.

Composite slabs incorporating BONDEK® can be designed in a number of ways:

- Using the design tables given in this manual.
- Calculate from first principles using the relevant Australian Standards, Eurocodes and data from the current BONDEK® design software.
- Contact Steel Direct on 1800 641 417 or your local LYSAGHT® Technical Sales Representative to provide additional information.

However, if in doubt you should get advice from a specialist where required.

DESIGN ADVANTAGES INCLUDE:

- Excellent spanning capacities for greater strength and less deflection.
- Acts as permanent formwork with minimal propping and no stripping of formwork face is required.
- Fast and easy to install (590mm wide) with less handling required.
- Works as reinforcement with composite slab saving on concrete and reinforcement costs.
- Ribs at 200mm centres creating a safe working platform with slip resistant embossments on the ribs.
- Advanced design for fire resistance.
- New BONDEK® design software gives added flexibility and ease of design.
- Backed by a BlueScope Steel warranty.
- Nationwide technical support.

Figure 1.2

BONDEK® dimensions (2 sheets shown),
(Fire reinforcement is not shown, see Chapter 5).

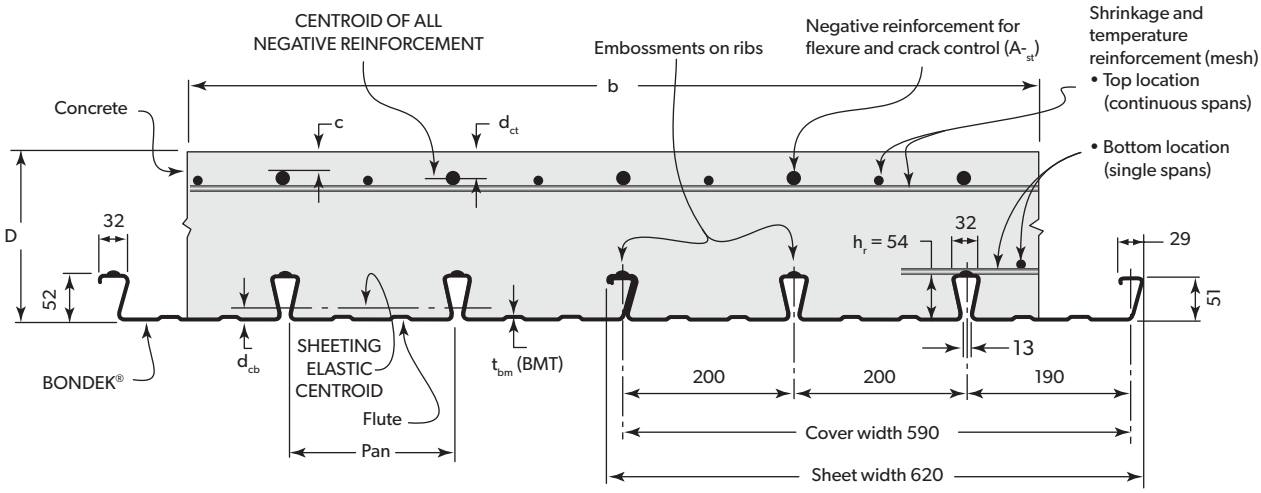

Table 1.1

BONDEK® section properties.

	Thickness BMT	Cross-sectional area of BONDEK®	Sheeting elastic centroid
	mm	**A_{sh} mm²/m**	**d_{cb} mm**
BONDEK®	1.0	1678	15.5
	0.9	1503	15.4
	0.75	1259	15.3
	0.6	1007	15.2

Table 1.2

Material specification (based on Z350).

Thickness	Mass		Yield Strength	Coverage
mm	**kg/m²**	**kg/m**	**MPa**	**m²/t**
0.60	8.52	5.03	550	117.31
0.75	10.50	6.20	550	95.24
0.90	12.48	7.36	550	80.16
1.00	13.79	8.14	550	72.50

2. Purpose and scope of this publication

As stated in the Preface and Introduction, the purpose of this Manual is to facilitate the design of BONDEK® in its use as formwork (with and without propping) and within concrete slabs for both steel-framed and concrete framed buildings. It has been developed in accordance with the latest Australian Standards. The Manual includes the following information:

- Formwork Design and Spanning Tables (Section 3)
- Composite Slab Design (Section 4)
- Design for Fire (Section 5)
- Design Tables - Steel-framed construction (Section 6)
- Construction and Detailing (Section 7)

Section 6 gives tabulated solutions for composite slabs in typical design situations.

Use this Manual's tables for typical design cases. If the appropriate table is not in this Manual, try the BONDEK® design software, which is available from the website, at: www.lysaght.com/bondekdesignsoftware, to assist in designing other cases. If none of these options provides a suitable solution, contact Steel Direct on 1800 641 417 or your local LYSAGHT® Technical Sales Representative to provide additional information.

The information presented by the tabulated solutions of Sections 3 and 6 is intended for guidance only. This information is to be used only in conjunction with a consulting structural engineer.

3. Formwork design

3.1 INTRODUCTION

The installation of BONDEK® follows traditional methods for quick and easy installation. It is available in long lengths so large areas can be quickly and easily covered to form a safe working platform during construction. BONDEK® provides a cover width of 590mm, which allows quick installation.

Formwork design calculations are covered in this section-geometric layout considerations are generally covered in Section 7 (Construction and Detailing).

Our design tables may be used to detail BONDEK® acting as structural formwork, provided the following conditions are satisfied.

3.2 RECOMMENDED DEFLECTION LIMITS

AS 3610-1995 Formwork for concrete, defines five classes of surface finish (numbered 1 to 5) covering a broad range of applications.

We recommend a deflection limit of span/240 for the design of composite slabs in which good general alignment is required, so that the soffit has a good visual quality when viewed as a whole. We consider span/240 to be suitable for a Class 3 and 4 surface finish and, in many situations, Class 2. Where alignment affects the thickness of applied finishes (for example vermiculite), you may consider a smaller limit of span/270 to be more suitable.

We consider span/130 to be a reasonable maximum deflection limit appropriate for profile steel sheeting in situations where visual quality is not significant (Class 5).

The design rules presented may be used for deflection limits other than those stated above however, for deflection greater than span/130, you may contact our information service.

3.3 LOADS FOR DESIGN

BONDEK® shall be designed as formwork for two stages of construction according to AS 3610-1995 and AS 2327.1-2003.

STAGE I

Prior to the placement of the concrete:

- during handling and erection of the formwork; and
- once the formwork is erected but prior to the placement of the concrete.

When a live load due to stacked materials can be adequately controlled on the site at less than 4 kPa, the reduced design live load shall be clearly indicated on the formwork documentation. (1 kPa in tables from Section 3.4).

STAGE II

During placement of the concrete up until the concrete has set (until f_{cm} reaches 15 MPa and concrete is able to act flexurally to support additional loads such as stacked materials).

Note: No loads from stacked materials are allowed until the concrete has set.

- Different pattern loading shall be considered, including when one formwork span only is loaded - with live loads, loads due to stacked materials and wet concrete. The BONDEK® has sufficient capacity for a concentrated point load of 2.0 kN for all spans and BMT. It is not necessary to perform formwork capacity checks for concentrated loads.

3.4 USE OF SPANNING TABLES

The spanning tables presented in Section 3.5 are based on the following assumptions and constraints. The reader needs to ensure that the particular situation being designed falls within these assumptions and constraints.

1. These tables can be used for different types of construction (steel-frame, concrete frame, masonry wall supports) provided BONDEK® sheets are securely fixed to all permanent and temporary supports at every pan.
   - Suitable secure fixing methods should be used such as spot welds, self drilling screws or drive nails.
   - Temporary props are equally spaced within each slab span.
   - There are two sets of formwork tables:
     Ratio of two adjacent slab spans equal 1:1 that is L/L=1
     The ratio of the longer slab span (L_l) to the shorter slab span (L_s) does not exceed 1.2, that is $L_l / L_s \leq 1.2$.
2. The tables shall be used for normal density concrete (2400kg/m^3).
3. The lines of support shall extend across the full width of the sheeting and have a minimum bearing 50mm at the ends of the sheets and 100mm at intermediate supports over which sheeting is continuous, including at props. 25mm minimum bearing length at the ends of sheets is acceptable in concrete frame construction.
4. The tables are based on the following maximum construction loads:
   - Workmen and equipment = 100kg/m^2.
   - Mounting of concrete = 300kg/m^2 over an area of 1.6 x 1.6m and zero over the remainder.
   - Stacking of material on BONDEK® sheets before placement of concrete only = 100kg/m^2. This load shall be clearly indicated on the formwork documentation and controlled on-site. Use BONDEK® design software for higher loads.
5. Tables developed based on maximum BONDEK® length is 19,500mm. (Check availability of local lengths).
6. No loads from stacked materials are allowed until the concrete has set.
7. The sheets shall not be spliced or jointed.
8. Allowance for the weight of reinforcement as well as the effect of ponding has been taken into account.
9. Supports shall be effectively rigid and strong to support construction loads.
10. The sheeting shall not have cantilever portions.
11. Wet concrete deflection of BONDEK® = L/240 or L/130, where L is the distance between centres of props or permanent supports.
12. The information contained in the publication is intended for guidance only. This information to be used only in conjunction with a consulting structural engineer.
13. Further details can be sought from the publication BONDEK® Design Manual or contact Steel Direct on 1800 641 417 or your local LYSAGHT® Technical Sales Representative to provide additional information.

Figure 3.1a

BONDEK® formwork for concrete frame.

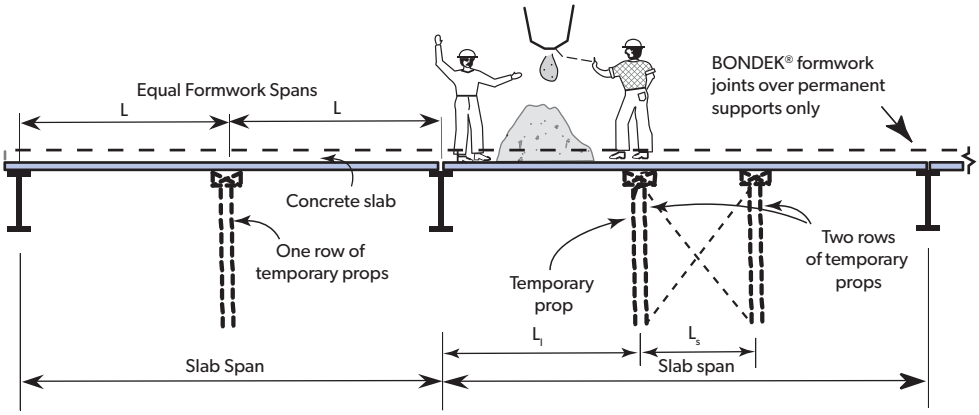

Figure 3.1b

BONDEK® formwork for masonry.

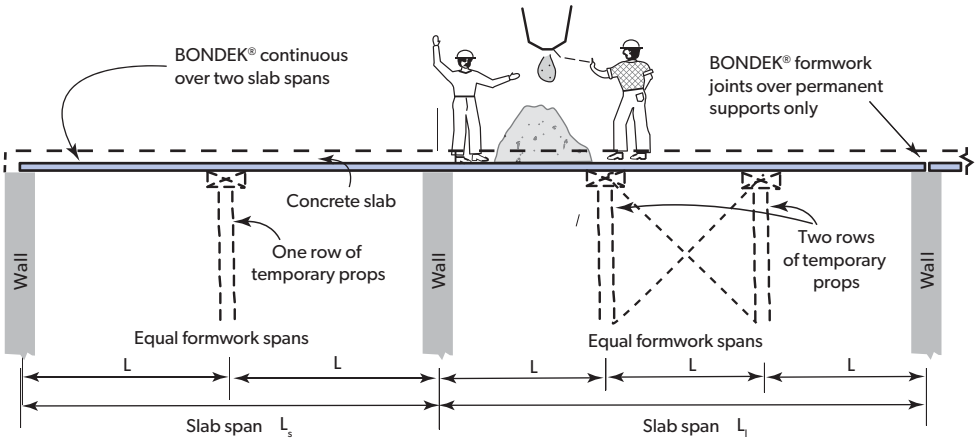

Figure 3.1c

BONDEK® formwork for steel frame.

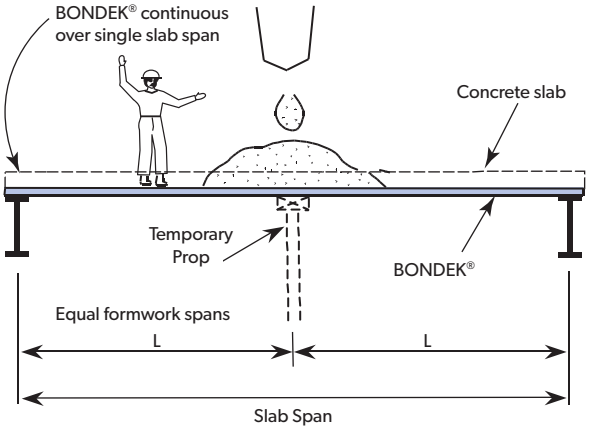

3.5 BONDEK® MAXIMUM SLAB SPANS

Maximum slab spans, mm

BONDEK® sheets continuous over single slab span

Formwork deflections limits L/240 (Visual appearance important)

Slab Depth D (mm)	0.6 BMT BONDEK® No of props per span			0.75 BMT BONDEK® No of props per span			0.9 BMT BONDEK® No of props per span			1.0 BMT BONDEK® No of props per span		
	0	1	2	0	1	2	0	1	2	0	1	2
100	2000	4950	7350	2150	5850	8150	2250	6300	8700	2350	6500	9050
110	1900	4750	7150	2050	5700	7900	2200	6100	8450	2250	6350	8800
120	1800	4650	6900	2000	5550	7700	2150	5950	8250	2200	6150	8550
130	1750	4500	6650	1950	5400	7500	2100	5800	8050	2150	6000	8350
140	1700	4400	6400	1900	5300	7300	2050	5650	7850	2100	5900	8100
150	1650	4300	6200	1850	5200	7100	2000	5550	7600	2050	5750	7900
160	1600	4250	6050	1750	5050	6900	1900	5450	7400	2000	5650	7700
170	1550	4150	5850	1750	5000	6750	1850	5300	7250	1950	5550	7500
180	1550	4050	5700	1700	4900	6550	1850	5200	7050	1900	5400	7350
190	1500	4000	5550	1650	4750	6400	1800	5100	6900	1850	5300	7200
200	1450	3900	5400	1600	4650	6250	1750	5000	6750	1850	5200	7050
210	1400	3850	5300	1550	4550	6150	1700	4900	6600	1800	5050	6900
220	1400	3800	5200	1550	4450	6000	1650	4800	6500	1750	5000	6800
230	1350	3750	5050	1500	4350	5900	1650	4700	6400	1700	4900	6650
240	1350	3700	4950	1500	4300	5800	1600	4600	6250	1700	4800	6550
250	1300	3600	4850	1450	4200	5650	1600	4550	6150	1650	4750	6450

Maximum slab spans, mm

BONDEK® sheets continuous over single slab span

Formwork deflections limits L/130 (Visual appearance not important)

Slab Depth D (mm)	0.6 BMT BONDEK® No of props per span			0.75 BMT BONDEK® No of props per span			0.9 BMT BONDEK® No of props per span			1.0 BMT BONDEK® No of props per span		
	0	1	2	0	1	2	0	1	2	0	1	2
100	2100	4800	7200	2550	5900	8850	2700	7100	10000	2800	7700	10000
110	2050	4700	7050	2500	5750	8650	2650	6900	10000	2700	7450	10000
120	2000	4550	6850	2450	5600	8400	2550	6700	9850	2650	7300	10000
130	1950	4450	6700	2350	5450	8200	2500	6550	9650	2600	7100	10000
140	1950	4350	6550	2300	5350	8050	2450	6400	9450	2550	6950	9800
150	1900	4250	6400	2250	5250	7850	2400	6250	9250	2500	6800	9600
160	1850	4200	6300	2200	5100	7700	2350	6100	9100	2450	6650	9450
170	1800	4100	6150	2200	5000	7550	2300	6000	8900	2400	6500	9250
180	1800	4050	6050	2150	4950	7400	2250	5900	8750	2350	6400	9100
190	1750	3950	5950	2100	4850	7250	2250	5750	8650	2300	6250	8950
200	1750	3900	5850	2050	4750	7150	2200	5650	8500	2250	6150	8800
210	1700	3850	5750	2050	4700	7050	2150	5550	8350	2250	6050	8700
220	1700	3750	5650	2000	4600	6900	2150	5500	8250	2200	5950	8550
230	1650	3700	5550	2000	4550	6800	2100	5400	8100	2200	5850	8450
240	1650	3650	5500	1950	4450	6700	2050	5300	7950	2150	5750	8350
250	1600	3600	5400	1900	4400	6600	2050	5250	7850	2100	5650	8200

Notes:

1. These are formwork selection tables only. Maximum slab spans in these tables shall be designed by a qualified structural engineer.
2. Use BONDEK® design software for support widths other than 100mm.
3. 1 kPa Live Load due to stacked materials is used - this shall be indicated on formwork documentation and controlled on-site.
4. The availability of 0.9mm BMT BONDEK® is subject to enquiry.
5. Refer to General Engineering Notes when using these tables.

Maximum slab spans, mm

BONDEK® sheets continuous over 2 slab spans

Formwork deflections limits L/240 (Visual appearance important)

Equal slab spans

Slab depth D (mm)	0.6 BMT BONDEK® No of props per span			0.75 BMT BONDEK® No of props per span			0.9 BMT BONDEK® No of props per span			1.0 BMT BONDEK® No of props per span		
	0	1	2	0	1	2	0	1	2	0	1	2
100	2450	4900	7350	2900	5550	8350	3150	5900	8900	3250	6150	9250
110	2350	4750	7150	2850	5400	8100	3050	5750	8650	3150	5950	8950
120	2300	4650	6950	2750	5250	7850	2950	5600	8400	3050	5800	8750
130	2250	4500	6800	2700	5100	7650	2900	5450	8200	3000	5650	8500
140	2200	4400	6600	2650	5000	7500	2800	5350	8000	2950	5550	8300
150	2150	4250	6400	2600	4850	7300	2750	5200	7800	2850	5400	8100
160	2100	4150	6200	2500	4750	7100	2700	5050	7600	2800	5250	7900
170	2050	4000	6050	2500	4600	6950	2650	4950	7400	2750	5150	7700
180	2000	3900	5900	2450	4500	6750	2600	4800	7250	2700	5000	7550
190	2000	3800	5750	2350	4400	6600	2550	4700	7100	2650	4900	7350
200	1950	3700	5600	2300	4300	6450	2500	4600	6950	2600	4800	7200
210	1900	3650	5450	2250	4200	6300	2450	4500	6800	2500	4700	7100
220	1900	3550	5350	2200	4100	6200	2400	4450	6650	2500	4600	6950
230	1850	3450	5200	2150	4050	6050	2350	4350	6550	2450	4550	6850
240	1800	3400	5100	2150	3950	5950	2300	4300	6450	2400	4450	6700
250	1800	3350	5000	2100	3900	5850	2250	4200	6300	2350	4400	6600

Maximum slab spans, mm

BONDEK® sheets continuous over 2 slab spans

Formwork deflections limits L/130 (Visual appearance not important)

Equal slab spans

Slab Depth D (mm)	0.6 BMT BONDEK® No of props per span			0.75 BMT BONDEK® No of props per span			0.9 BMT BONDEK® No of props per span			1.0 BMT BONDEK® No of props per span		
	0	1	2	0	1	2	0	1	2	0	1	2
100	2400	4800	7200	2950	5900	8850	3550	7050	10000	3850	7300	10000
110	2350	4700	7050	2850	5750	8650	3450	6850	10000	3700	7100	10000
120	2250	4550	6850	2800	5600	8400	3350	6700	10000	3650	6950	10000
130	2200	4450	6700	2700	5450	8200	3250	6550	9800	3550	6800	10000
140	2150	4350	6550	2650	5350	8050	3200	6400	9600	3450	6650	10000
150	2100	4250	6400	2600	5250	7850	3100	6250	9400	3400	6550	9800
160	2100	4200	6300	2550	5100	7700	3050	6100	9200	3300	6400	9600
170	2050	4100	6150	2500	5000	7550	3000	6000	9000	3250	6300	9450
180	2000	4050	6050	2450	4950	7440	2950	5900	8850	3200	6200	9300
190	1950	3950	5950	2400	4850	7250	2850	5750	8650	3100	6100	9150
200	1950	3900	5850	2350	4750	7150	2800	5650	8500	3050	6000	9000
210	1900	3850	5750	2350	4700	7050	2750	5550	8350	3000	5900	8850
220	1850	3750	5650	2300	4600	6900	2750	5500	8250	2950	5800	8750
230	1850	3700	5550	2250	4550	6800	2700	5400	8100	2900	5750	8650
240	1800	3650	5500	2200	4450	6700	2650	5300	7950	2850	5650	8500
250	1800	3600	5400	2200	4400	6600	2600	5250	7850	2800	5600	8400

Notes:

1. These are formwork selection tables only. Maximum slab spans in these tables shall be designed by a qualified structural engineer.
2. Use BONDEK® design software for support widths other than 100mm.
3. 1 kPa Live Load due to stacked materials is used - this shall be indicated on formwork documentation and controlled on-site.
4. The availability of 0.9mm BMT BONDEK® is subject to enquiry.
5. Refer to General Engineering Notes when using these tables.

Maximum slab spans, mm

BONDEK® sheets continuous over 3 or more slab spans

Formwork deflections limits L/240 (Visual appearance important)

Equal slab spans

Slab Depth D (mm)	0.6 BMT BONDEK® No of props per span			0.75 BMT BONDEK® No of props per span			0.9 BMT BONDEK® No of props per span			1.0 BMT BONDEK® No of props per span		
	0	1	2	0	1	2	0	1	2	0	1	2
100	2450	4900	7350	2700	5550	8350	2900	5900	8900	3000	6150	9250
110	2350	4750	7150	2600	5400	8100	2800	5750	8650	2900	5950	8950
120	2300	4650	6950	2550	5250	7850	2750	5600	8400	2850	5800	8750
130	2200	4500	6800	2500	5100	7650	2650	5450	8200	2750	5650	8500
140	2100	4400	6600	2450	5000	7500	2600	5350	8000	2700	5550	8300
150	2050	4250	6400	2350	4850	7300	2500	5200	7800	2600	5400	8100
160	2000	4150	6200	2300	4750	7100	2450	5050	7600	2550	5250	7900
170	1950	4000	6050	2250	4600	6950	2400	4950	7400	2500	5150	7700
180	1900	3900	5900	2150	4500	6750	2350	4800	7250	2450	5000	7550
190	1850	3800	5750	2100	4400	6600	2300	4700	7100	2400	4900	7350
200	1800	3700	5600	2050	4300	6450	2250	4600	6950	2350	4800	7200
210	1750	3650	5450	2050	4200	6300	2200	4500	6800	2300	4700	7100
220	1700	3550	5350	2000	4100	6200	2150	4450	6650	2250	4600	6950
230	1650	3450	5200	1950	4050	6050	2100	4350	6550	2200	4550	6850
240	1650	3400	5100	1900	3950	5950	2050	4300	6450	2150	4450	6700
250	1600	3350	5000	1850	3900	5850	2050	4200	6300	2150	4400	6600

Maximum slab spans, mm

BONDEK® sheets continuous over 3 or more slab spans

Formwork deflections limits L/130 (Visual appearance not important)

Equal slab spans

Slab Depth D (mm)	0.6 BMT BONDEK® No of props per span			0.75 BMT BONDEK® No of props per span			0.9 BMT BONDEK® No of props per span			1.0 BMT BONDEK® No of props per span		
	0	1	2	0	1	2	0	1	2	0	1	2
100	2400	4800	7200	2950	5900	8850	3450	7050	10000	3550	7300	10000
110	2350	4700	7050	2850	5750	8650	3350	6850	10000	3500	7100	10000
120	2250	4550	6850	2800	5600	8400	3250	6700	10000	3400	6950	10000
130	2200	4450	6700	2700	5450	8200	3200	6550	9800	3300	6800	10000
140	2150	4350	6550	2650	5350	8050	3150	6400	9600	3250	6650	10000
150	2100	4250	6400	2600	5250	7850	3050	6250	9400	3200	6550	9800
160	2100	4200	6300	2550	5100	7700	3000	6100	9200	3150	6400	9600
170	2050	4100	6150	2500	5000	7550	2950	6000	9000	3050	6300	9450
180	2000	4050	6050	2450	4950	7440	2900	5900	8850	3000	6200	9300
190	1950	3950	5950	2400	4850	7250	2850	5750	8650	2950	6100	9150
200	1950	3900	5850	2350	4750	7150	2800	5650	8500	2900	6000	9000
210	1900	3850	5750	2350	4700	7050	2750	5550	8350	2900	5900	8850
220	1850	3750	5650	2300	4600	6900	2750	5500	8250	2850	5800	8750
230	1850	3700	5550	2250	4550	6800	2700	5400	8100	2800	5750	8650
240	1800	3650	5500	2200	4450	6700	2650	5300	7950	2750	5650	8500
250	1800	3600	5400	2200	4400	6600	2600	5250	7850	2700	5600	8400

Notes:

1. These are formwork selection tables only. Maximum slab spans in these tables shall be designed by a qualified structural engineer.
2. Use BONDEK® design software for support widths other than 100mm.
3. 1 kPa Live Load due to stacked materials is used - this shall be indicated on formwork documentation and controlled on-site.
4. The availability of 0.9mm BMT BONDEK® is subject to enquiry.
5. Refer to General Engineering Notes when using these tables.

Maximum slab spans, mm

BONDEK® sheets continuous over 2 slab spans

Formwork deflections limits L/240 (Visual appearance important)

Slabs spans ratio up to 1:1.2

Slab depth D (mm)	0.6 BMT BONDEK® No of props per span			0.75 BMT BONDEK® No of props per span			0.9 BMT BONDEK® No of props per span			1.0 BMT BONDEK® No of props per span		
	0	1	2	0	1	2	0	1	2	0	1	2
100	2400	4900	7250	2750	5350	8000	2950	5700	8550	3050	5950	8900
110	2350	4650	7000	2700	5200	7800	2850	5550	8300	3000	5750	8650
120	2300	4450	6700	2600	5050	7600	2800	5400	8100	2900	5600	8400
130	2200	4300	6500	2550	4900	7400	2700	5250	7900	2850	5450	8150
140	2150	4150	6250	2500	4750	7150	2650	5100	7650	2750	5300	7950
150	2100	4050	6050	2450	4600	6950	2600	4950	7450	2700	5150	7700
160	2050	3900	5900	2350	4500	6750	2500	4800	7250	2600	5000	7550
170	2000	3800	5700	2300	4350	6550	2450	4700	7050	2550	4900	7350
180	1950	3700	5550	2250	4250	6400	2400	4600	6900	2500	4800	7200
190	1900	3600	5400	2200	4150	6250	2350	4500	6750	2450	4700	7050
200	1850	3500	5300	2150	4050	6100	2300	4400	6600	2400	4600	6900
210	1800	3450	5150	2100	4000	6000	2250	4300	6450	2350	4500	6750
220	1750	3350	5050	2050	3900	5850	2200	4200	6350	2300	4400	6650
230	1750	3300	4950	2000	3800	5750	2150	4150	6250	2250	4350	6500
240	1700	3200	4850	1950	3750	5650	2150	4050	6100	2200	4250	6400
250	1650	3150	4750	1950	3700	5550	2100	4000	6050	2200	4200	6300

Maximum slab spans, mm

BONDEK® sheets continuous over 2 slab spans

Formwork deflections limits L/130 (Visual appearance not important)

Slabs spans ratio up to 1:1.2

Slab Depth D (mm)	0.6 BMT BONDEK® No of props per span			0.75 BMT BONDEK® No of props per span			0.9 BMT BONDEK® No of props per span			1.0 BMT BONDEK® No of props per span		
	0	1	2	0	1	2	0	1	2	0	1	2
100	2350	4750	7150	2900	5850	8750	3500	6800	10000	3650	7050	10000
110	2300	4650	6950	2850	5700	8550	3400	6600	9950	3550	6850	10000
120	2250	4500	6800	2750	5550	8350	3300	6450	9700	3450	6700	10000
130	2200	4450	6650	2700	5400	8150	3200	6300	9500	3400	6550	9850
140	2150	4300	6500	2650	5300	7950	3150	6200	9300	3300	6400	9650
150	2100	4250	6350	2600	5200	7800	3100	6050	9100	3250	6300	9450
160	2050	4150	6250	2500	5050	7600	3000	5950	8450	3200	6150	9250
170	2000	4050	6100	2450	4950	7450	2950	5850	8750	3150	6050	9100
180	2000	4000	6000	2450	4900	7350	2900	5750	8600	3100	5950	8950
190	1950	3950	5900	2400	4800	7200	2850	5650	8500	3050	5850	8800
200	1900	3850	5800	2350	4700	7050	2800	5550	8350	3000	5750	8650
210	1900	3800	5700	2300	4650	6950	2750	5450	8200	2950	5700	8550
220	1850	3750	5650	2250	4550	6850	2700	5400	8100	2900	5600	8400
230	1850	3700	5550	2250	4500	6750	2650	5300	8000	2850	5500	8300
240	1800	3650	5450	2200	4400	6650	2600	5250	7850	2850	5450	8150
250	1800	3600	5400	2150	4350	6550	2550	5150	7750	2800	5350	8050

Notes:

1. These are formwork selection tables only. Maximum slab spans in these tables shall be designed by a qualified structural engineer.
2. Use BONDEK® design software for support widths other than 100mm.
3. 1 kPa Live Load due to stacked materials is used - this shall be indicated on formwork documentation and controlled on-site.
4. The availability of 0.9mm BMT BONDEK® is subject to enquiry.
5. Refer to General Engineering Notes when using these tables.

Maximum slab spans, mm

BONDEK® sheets continuous over 3 or more slab spans

Formwork deflections limits L/240 (Visual appearance important)

Slabs spans ratio up to 1.1.2

Slab Depth D (mm)	0.6 BMT BONDEK® No of props per span			0.75 BMT BONDEK® No of props per span			0.9 BMT BONDEK® No of props per span			1.0 BMT BONDEK® No of props per span		
	0	1	2	0	1	2	0	1	2	0	1	2
100	2350	4900	7250	2600	5350	8000	2800	5700	8550	2900	5950	8900
110	2250	4650	7000	2550	5200	7800	2700	5550	8300	2800	5750	8650
120	2150	4450	6700	2450	5050	7600	2650	5400	8100	2750	5600	8400
130	2100	4300	6500	2400	4900	7400	2550	5250	7900	2650	5450	8150
140	2000	4150	6250	2300	4750	7150	2500	5100	7650	2600	5300	7950
150	1950	4050	6050	2250	4600	6950	2400	4950	7450	2500	5150	7700
160	1900	3900	5900	2200	4500	6750	2350	4800	7250	2450	5000	7550
170	1850	3800	5700	2150	4350	6550	2300	4700	7050	2400	4900	7350
180	1800	3700	5550	2050	4250	6400	2250	4600	6900	2350	4800	7200
190	1750	3600	5400	2000	4150	6250	2200	4500	6750	2300	4700	7050
200	1700	3500	5300	2000	4050	6100	2150	4400	6600	2250	4600	6900
210	1650	3450	5150	1950	4000	6000	2100	4300	6450	2200	4500	6750
220	1650	3350	5050	1900	3900	5850	2050	4200	6350	2150	4400	6650
230	1600	3300	4950	1850	3800	5750	2000	4150	6250	2100	4350	6500
240	1550	3200	4850	1800	3750	5650	2000	4050	6100	2050	4250	6400
250	1550	3150	4750	1800	3700	5550	1950	4000	6050	2050	4200	6300

Maximum slab spans, mm

BONDEK® sheets continuous over 3 or more slab spans

Formwork deflections limits L/130 (Visual appearance not important)

Slabs spans ratio up to 1.1.2

Slab Depth D (mm)	0.6 BMT BONDEK® No of props per span			0.75 BMT BONDEK® No of props per span			0.9 BMT BONDEK® No of props per span			1.0 BMT BONDEK® No of props per span		
	0	1	2	0	1	2	0	1	2	0	1	2
100	2350	4750	7150	2900	5850	8750	3350	6800	10000	3450	7050	10000
110	2300	4650	6950	2850	5700	8550	3250	6600	9950	3350	6850	10000
120	2250	4500	6800	2750	5550	8350	3150	6450	9700	3300	6700	10000
130	2200	4450	6650	2700	5400	8150	3100	6300	9500	3200	6550	9850
140	2150	4300	6500	2650	5300	7950	3050	6200	9300	3150	6400	9650
150	2100	4250	6350	2600	5200	7800	2950	6050	9100	3100	6300	9450
160	2050	4150	6250	2500	5050	7600	2900	5950	8450	3000	6150	9250
170	2000	4050	6100	2450	4950	7450	2850	5850	8750	2950	6050	9100
180	2000	4000	6000	2450	4900	7350	2800	5750	8600	2900	5950	8950
190	1950	3950	5900	2400	4800	7200	2750	5650	8500	2850	5850	8800
200	1900	3850	5800	2350	4700	7050	2700	5550	8350	2850	5750	8650
210	1900	3800	5700	2300	4650	6950	2700	5450	8200	2800	5700	8550
220	1850	3750	5650	2250	4550	6850	2650	5400	8100	2750	5600	8400
230	1850	3700	5550	2250	4500	6750	2600	5300	8000	2700	5500	8300
240	1800	3650	5450	2200	4400	6650	2550	5250	7850	2650	5450	8150
250	1800	3600	5400	2150	4350	6550	2500	5150	7750	2600	5350	8050

Notes:

1. These are formwork selection tables only. Maximum slab spans in these tables shall be designed by a qualified structural engineer.
2. Use BONDEK® design software for support widths other than 100mm.
3. 1 kPa Live Load due to stacked materials is used - this shall be indicated on formwork documentation and controlled on-site.
4. The availability of 0.9mm BMT BONDEK® is subject to enquiry.
5. Refer to General Engineering Notes when using these tables.

4. Composite slab design

4.1 INTRODUCTION

Considerable research into the behaviour of composite slabs has been performed in the past years. The efficiency of the composite slab depends on the composite action between the steel sheeting and concrete slab. The experiments indicated that the shear bond strength at the interface between the steel sheet and the surrounding concrete is the key factor in determining the behaviour of composite slabs.

The adhesion bond between the sheeting and the concrete can play a part in this behaviour. However, following the breakdown of the adhesion bond, slip is resisted by mechanical interlock and friction developed between the steel sheeting and the surrounding concrete. The mechanical interlock and friction depend upon the shape of the rib, thickness of the sheet and size and frequency of the embossments.

This chapter explains the parameters upon which our design tables are based. Solutions to your design problems may be obtained by direct reference to the current version of our BONDEK® design software.

The design solutions are based on linear elastic analysis according to AS 3600:2009 Clause 6.2 and partial shear connection theory. Data about composite performance of BONDEK® slabs have been obtained from full-scale slab tests, supplemented by slip-block tests.

Use the appropriate LYSAGHT® design software in other cases (concrete grades, environmental classifications, fire ratings, moment redistribution, etc.).

The tables provide solutions for steel-frame (or other narrow supports like masonry walls) provided the following conditions are satisfied.

4.2 DESIGN LOADS

4.2.1 STRENGTH LOAD COMBINATIONS

For strength calculations, design loads for both propped and unpropped construction shall be based on the following load combinations.

Load combinations and pattern loading shall be considered according to AS 3600:2009 Clause 2.4 including pattern loads according to Clause 2.4.4.

As per AS 3600:2009: $1.2\,(G_c + G_{sh} + G_{sdl}) + 1.5\,Q$

For bending (composite) and shear capacity in positive (with top outer fibre of concrete in compression) areas as per EN 1994-1-1:2005.

$1.35\,(G_c + G_{sh} + G_{sdl}) + 1.5\,Q$

where G_c = self weight of concrete; G_{sh} = self weight of sheeting; G_{sdl} = superimposed dead load (partitions, floor tiles, etc.)
Q = live load

4.2.2 SERVICEABILITY LOAD COMBINATIONS

Our load tables are based on deflections due to loading applied to the composite slab according to AS 3600:2009 Clause 2.4 including pattern loads according to Clause 2.4.4. Load combinations for crack control have been worked out in accordance AS 3600:2009 Clause 9.4.1.

4.2.3 SUPERIMPOSED DEAD LOAD

The maximum superimposed dead load (G_{sdl}) assumed in our design tables is 1.0 kPa. Use BONDEK® design software for other G_{sdl} loads.

4.3 DESIGN FOR STRENGTH

4.3.1 NEGATIVE BENDING REGIONS

A) NEGATIVE BENDING STRENGTH

For the bending strength design in negative moment regions, the presence of the sheeting in the slab is ignored and the slab shall be designed as conventional reinforced concrete solid slab. For this purpose, use the provisions of AS 3600:2009, Clause 9.1.

The minimum bending strength requirement of AS 3600:2009, Clause 9.1.1 shall be satisfied.

B) SHEAR STRENGTH

The strength of a slab in shear shall be designed as per the guidelines outlined in Clause 9.2 of AS 3600:2009. The Design tables are based on these guidelines.

4.3.2 POSITIVE BENDING REGIONS

A) POSITIVE BENDING STRENGTH

Positive bending capacity shall be calculated as per EN 1994-1-1:2005 Clause 9.7.2. It takes into consideration partial shear connection theory and the design tables have been developed in accordance with it.

B) SHEAR STRENGTH

The positive shear capacity can be calculated as per EN 1992-1-1:2004 Clause 4.3.2.3. Partial shear connection theory is used for the contribution of BONDEK®.

4.4 DESIGN FOR DURABILITY AND SERVICEABILITY

4.4.1 EXPOSURE CLASSIFICATION AND COVER

The exposure classification used in design tables for BONDEK® slabs is A1 as defined in AS 3600:2009, Clause 4.3. Use BONDEK® software for all other classifications.

The minimum concrete cover (c) to reinforcing steel, measured from the slab top face, shall comply with AS 3600:2009, Table 4.10.3.2.

4.4.2 DEFLECTIONS

Deflections are calculated using method given in AS 3600:2009 Clause 8.5.3.

4.4.3 CRACK CONTROL

The Design tables have been developed based on advanced requirements for crack control as per Clause 9.4.1 of AS 3600:2009. It is important to use minimum bar diameters in negative areas to minimise total depth of reinforcement. Bar diameters 16mm and 20mm cannot be used with these tables. It is recommended that the small reinforcing bars be suitably distributed over the negative moment region not exceeding the spacing requirement as specified in AS 3600:2009 Clause 9.4.1. Use BONDEK® design software to design slabs with bars other than 12mm.

4.5 DETAILING OF CONVENTIONAL REINFORCEMENT

Conventional tensile reinforcement in negative moment regions must be detailed in accordance with relevant requirements for one way slabs.

PATTERN 1

Negative-moment regions must be designed to satisfy the requirements of AS 3600:2009 Clause 9. The composite slab negative-moment regions can be treated as solid reinforced-concrete sections.

PATTERN 2

When live loads exceed twice the dead load, at least one third of negative reinforcement must continue over a whole span.

Figure 4.1

Pattern 1 for conventional reinforcement.

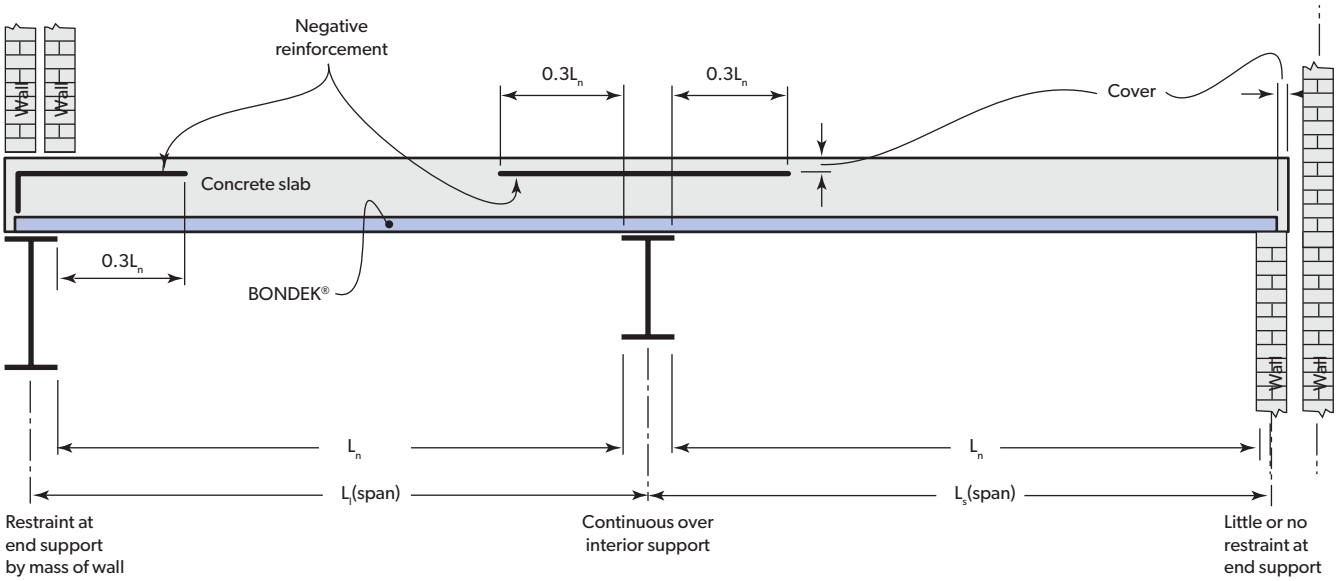

Figure 4.2

Pattern 2 for conventional reinforcement when imposed load exceeds twice the dead load.

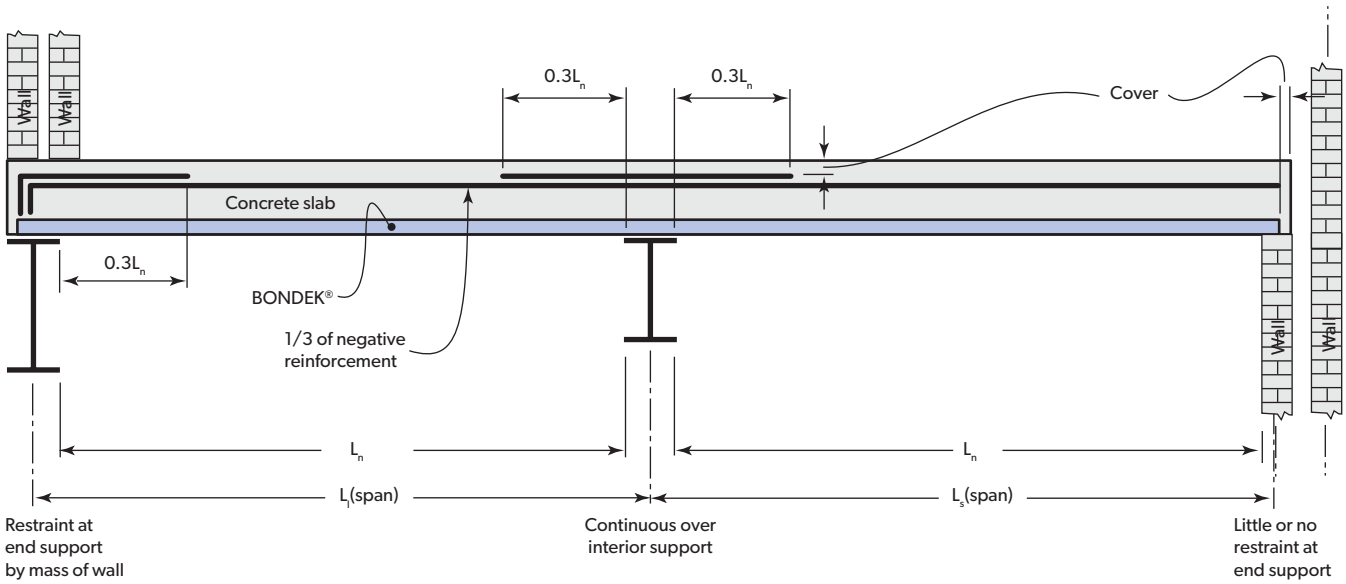

4.6 USE OF TABLES GIVEN IN SECTION 6

The design solutions given in the tables presented in Section 6 is based on the design principles given in this section and the following assumptions and constraints. Other constraints are stated in Section 6.1. The reader needs to ensure that the particular situation being designed falls within these assumptions and constraints.

1. The concrete manufacture and materials satisfy the requirements of AS 3600:2009, Clause 17.
2. The lines of support extend across the full width of the sheeting and have a minimum bearing of 50mm at the ends of the sheets, and 100mm minimum at intermediate supports over which sheeting is continuous.
3. The ratio of the longer slab span (L_l) to the shorter slab span (L_s) of any two adjacent spans does not exceed 1.2, that is $L_l / L_s \leq 1.2$.
4. The slab has a uniform cross-section.
5. The design loads for serviceability and strength design must be uniformly-distributed and static in nature.
6. The bending moments at the supports are only caused by the action of vertical loads applied to the slab.
7. The geometry of the steel sheeting profile must conform to the dimensions and tolerances shown on our production drawings. Sheeting with embossments less than the specified lower characteristic value shall not be used compositely unless the value of longitudinal shear resistance is revised.
8. Material and construction requirements for conventional reinforcing steel shall be in accordance with AS 3600:2009, Clause 17.2 and the design yield stress, (f_{sy}), shall be taken from AS 3600:2009, Table 3.2.1, for the appropriate type and grade of reinforcement, and manufacturers' data.
9. BONDEK® shall not be spliced, lapped or joined longitudinally in any way.
10. The permanent support lines shall extend across the full width of the slab.
11. Similar to the requirement in AS 2327.1, Clause 4.2.3, composite action shall be assumed to exist between the steel sheeting and the concrete once the concrete in the slab has attained a compressive strength of 15 MPa, that is $f'_{cj} \geq 15$ MPa. Prior to the development of composite action during construction (Stage 4 defined in AS 2327.1), potential damage to the shear connection shall be avoided; and no loads from stacked materials are allowed.
12. Detailing of conventional tensile reinforcement over negative moment regions shall be arranged in accordance with the Figures 4.1 and 4.2. Refer to AS 3600:2009, Clause 9.1.3 for more information on detailing of tensile reinforcement in one-way slab.
13. Only BONDEK® profiles can be used with this manual. High design value of longitudinal shear strength of composite slab, $\tau_{u,Rd}$, responsible for composite performance are achieved due to the advanced features of BONDEK®.

5. Design for fire

5.1 INTRODUCTION

During the design of composite floor slabs exposed to fire, it is essential to take into account the effect of elevated temperatures on the material properties. The composite slabs should be assessed with respect to structural adequacy, thermal insulation and integrity. The minimum required thickness of composite slab to satisfy the insulation and integrity criterion is presented in Section 5.3. Design of slabs for the structural adequacy is presented in Section 5.4.

This Section discusses the parameters relating to the exposure of the soffit to fire, upon which our design tables are based. Solutions to your design problems may be obtained by direct reference to either our design tables, or our BONDEK® design software. Software will give more economical results. BONDEK® composite slabs are designed based on AS 3600:2009 Clause 5.3.1b and EN 1994.1.2:2005 Clause 4.4 suplimented with test data and thermal response modelling.

Our fire design tables may be used to detail BONDEK® composite slabs when the soffit is exposed to fire provided the following conditions are satisfied:

1. The composite slab acts as a one-way element spanning in the direction of the sheeting ribs for both room temperature and fire conditions.
2. The fire design load is essentially uniformly distributed and static in nature.
3. Transverse reinforcement for the control of cracking due to shrinkage and temperature effects is provided.
4. Adequate detailing of slab jointing, edges, slab holes and cavities (for penetrating, embedded or encased services) to provide the appropriate fire resistance period. Alternatively the local provision of suitable protection (such as fire spray material) will be necessary.
5. Reinforcement conforms to Section 5.5 of this manual.

5.2 FIRE RESISTANCE PERIODS

Five fire cases, 60, 90, 120, 180 and 240 minutes, are considered. In each fire case the fire resistance periods for structural adequacy, integrity and insulation are taken to be equal duration. Fire resistance period up to two hours are provided in the design tables. It is recommended to use BONDEK® design software for fire resistance period up to four hours and alternative locations for fire reinforcement.

5.3 DESIGN FOR INSULATION AND INTEGRITY

Minimum required overall depth, D of BONDEK® slabs for insulation and integrity for various fire resistance periods is given in Table 5.1.

5.4. DESIGN FOR STRUCTURAL ADEQUACY

5.4.1 DESIGN LOADS

Use AS/NZS 1170.0:2002, Clause 4.2.4, together with design load for fire, $W_f = 1.0G + \psi_l Q$.

5.4.2 DESIGN FOR STRENGTH

In any specific design of a composite floor slab exposed to fire, it is essential the strength reduction factors account for the adverse effect of elevated temperatures on the mechanical properties of concrete and steel as well as a strength of shear bond capacity. The strength and structural adequacy must be checked in all potentially critical cross-sections for the given period of fire exposure considering the strength reduction factors. Fire tests on composite slabs incorporating BONDEK® profiled steel sheeting have been conducted at the Centre for Environmental Safety and Risk Engineering, the Victoria University of Technology.

The tests have been used to validate the finite element analysis result for temperatures of the slab for different fire periods. Subsequent tests were performed to evaluate shear bond capacities of BONDEK® profiled sheeting during fire.

Test results revealed that shear bond capacity in fire (composite action) is the governing parameter. Composite performance is the critical parameter during fire, therefore the location of the embossments is crucial. As the embossments are located on top of ribs, BONDEK® has superior composite performance during fire. BONDEK® ribs or part of the ribs are sufficiently cool to act as effective fire reinforcement.

No additional fire reinforcement is normally necessary for typical BONDEK® composite slabs with fire resistance up to 90 minutes. Small amounts fire reinforcement may be necessary for 120 minutes fire resistance.

Table 5.1

Fire resistance period	Normal density concrete
Minutes	**D (mm)**
60	90
90	100
120	120
180	140
240	175

5.5 REINFORCEMENT FOR FIRE DESIGN

The arrangement of additional fire reinforcement for fire design is shown in Figure 5.1.

- Some additional reinforcement may be necessary in some rare cases, in addition to any mesh and negative reinforcement required by our tables for composite slab design.
- D500L reinforcement is ignored in our design tables as fire reinforcement at all locations where significant elongation of reinforcement is expected
- The location of reinforcement $A^-_{st.f}$ for Fire detail 1 is in a single top layer at a depth of d_{ct} below the slab top face (refer to Figure 5.1). This detail is applicable to continuous slabs only, this option is used for interior spans in our design tables.
- The location of reinforcement $A^+_{st.f}$ for Fire detail 2 is in a single bottom layer at a distance of y_b above the slab soffit (refer to Figure 5.1). This option is used for single spans and end spans of continuous slabs in our design tables.
- The cross-sectional area of the additional reinforcement for fire design is designated $A^+_{st.f}$ in our tables (D500N with bar diameter = 12mm or less).
- The negative reinforcement (A^-_{st}) and the additional fire reinforcement ($A^+_{st.f}$ or $A^-_{st.f}$ as applicable), shall be located as shown in Figure 5.1 and 5.2.
- Location of mesh is at bottom for single spans and top for continuous spans. (See also Figure 1.2).

Figure 5.1

Details of reinforcement for fire design.

Fire detail 1

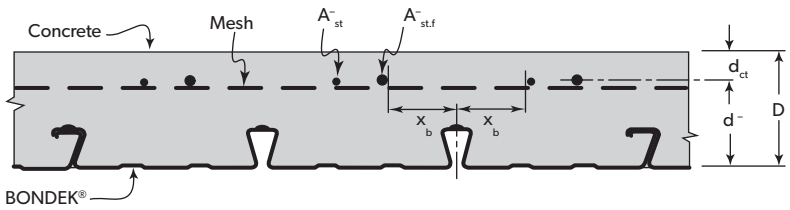

Fire detail 2

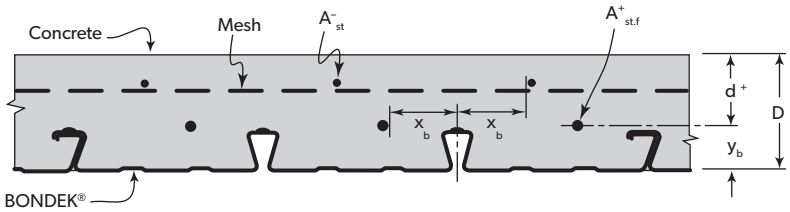

The longitudinal bars which make up $A+_{st.f}$ should be located within the zone shown in Figure 5.2.

x_b = 85mm minimum

y_b = 60mm average

Figure 5.2

Permissible zone for location of longitudinal fire reinforcement for Fire Detail 2.

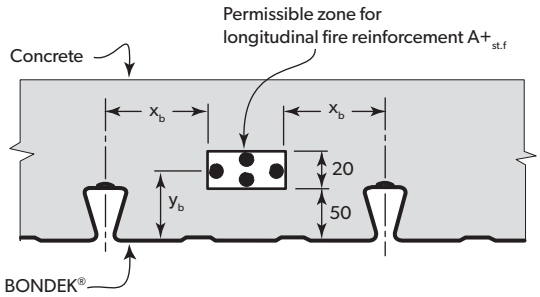

Notes:

1. Fire option 1 (Top location of additional fire reinforcement) is used in design tables for interior spans.
   Fire option 2 (Bottom) is used in design tables for simple and end spans.
2. Recommended bottom location of fire reinforcement is chosen for practical reasons (to place fire bars on transverse bars laid on top of BONDEK® ribs). Lower location of fire bars with cover down to 20mm from soffit may give more economical results - please consult LYSAGHT® Research & Technology. Design tables are based on location as shown above in Figure 5.2.

6. Design tables - steel-framed construction

6.1 USE OF DESIGN TABLES

The design parameters specific for each table are given in the tables:

- Spans: single, continuous, end or interior
- Spans: centre-to-centre (L)
- Thickness of the slab (D)
- Characteristic imposed 'live' load (Q)

The rest of parameters are common for all tables and listed below:

- More than four spans for continuous spans
- Concrete grade: f'_c = 32 MPa
- Type of construction: steel-frame construction or equivalent
- Density of wet concrete: 2400kg/m^3
- BONDEK® used as a structural deck with thickness 0.6, 0.75 , 0.9 or 1.0mm BMT (0.9mm available subject to enquiry)
- Minimum 100mm width of permanent supports
- A1 exposure classification (20mm cover for negative reinforcement)
- Composite slab deflection limits: L/250 for total loads and L/500 for incremental deflection
- Crack control required
- 1 kPa of superimposed dead load (G_{sdl}) in addition to self weight
- Reinforcement D500N for negative and fire reinforcement with maximum 12mm bar diameter
- Location of negative reinforcement as shown on Figure 1.2
- Location of fire reinforcement as shown on Figure 6.1 and 6.2
- Shrinkage mesh as in the Table 6.1 for minor degree of crack control
- Formwork with at least one temporary support per span assumed (fully supported conditions)

Notes:

Slab is designed for unit width (1.0m width)

Negative and fire reinforcement shown in tables is in addition to shrinkage mesh specified in Table 6.1. If negative fire reinforcement is required, at least one bar per BONDEK® rib should be placed. Smaller bar diameter may result in less negative and fire reinforcement.

ψs=0.7, ψl=0.4

6.2 INTERPRETATION OF TABLE SOLUTIONS

KEY - Single Spans

Fire reinforcement required for fire resistance of 120 minutes (mm²/m)

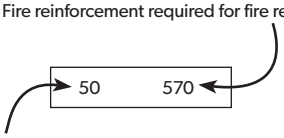

Bottom reinforcement required for fire resistance of 60 minutes (mm²/m)

KEY - Continuous Spans

Top tensile (negative) reinforcements over supports (mm²/m)

Fire reinforcement required for fire resistance of 120 minutes (mm²/m)

Fire reinforcement required for fire resistance of 90 minutes (mm²/m)

Notes:

1. Areas without cells mean that a design solution is not possible based on input parameters and design options presented in this manual. Contact LYSAGHT® Research & Technology for further options.
2. Single spans do not require top tensile reinforcement, relevant cells are not shown.
3. All spans are centre-to-centre.
4. A dash (-) means no fire reinforcement is necessary.
5. N/A means a design solution with this particular fire rating is not possible.
6. Top tensile/negative reinforcement is additional to shrinkage mesh area.

Table 6.1

Mesh sizes to be used with design tables.

Depth	Mesh
100	SL62
120	SL62
140	SL72
160	SL82
180	SL82

Figure 6.1

BONDEK® for single spans.

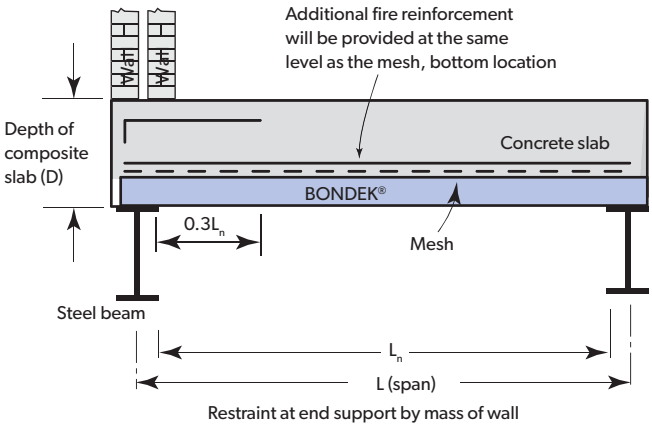

Figure 6.2

BONDEK® continuous spans.

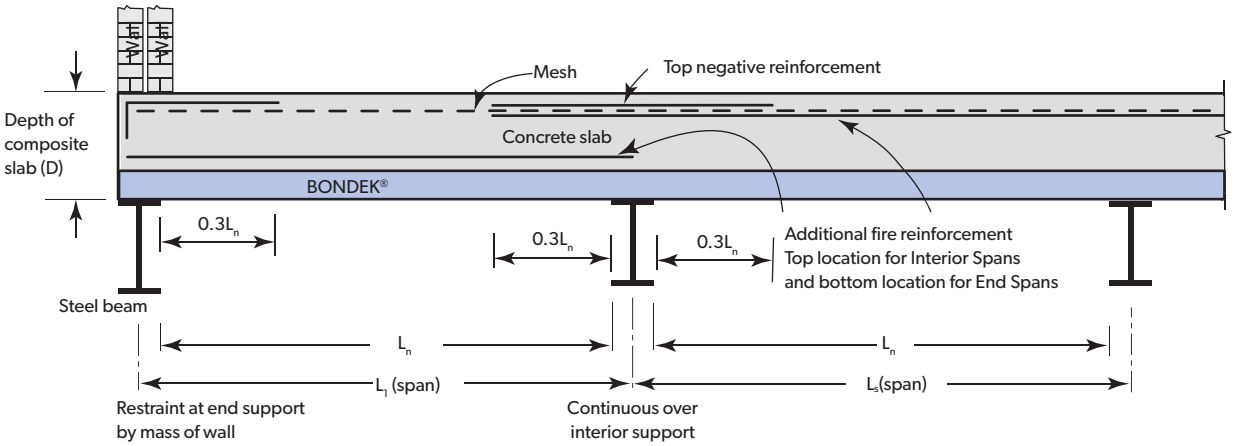

Note: 1/3 top negative reinforcement shall continue all over the span if ratio of live load to total dead load is more than 2.

6.3 SINGLE SPAN TABLES

Single Spans 100mm slab depth

Floor loading: Q imposed 'live' (kPa) G_{sdl} permanent superimposed 'dead' (kPa)

Span (mm)	Q=1.5 G_{sdl}=1		Q=2.5 G_{sdl}=1		Q=3.5 G_{sdl}=1		Q=5.0 G_{sdl}=1		Q=7.5 G_{sdl}=1	
1400	-	N/A	-	N/A	-	N/A	-	N/A	-	N/A
1600	-	N/A	-	N/A	-	N/A	-	N/A	-	N/A
1800	-	N/A	-	N/A	-	N/A	-	N/A	-	N/A
2000	-	N/A	-	N/A	-	N/A	-	N/A	-	N/A
2200	-	N/A	-	N/A	-	N/A	-	N/A	40	N/A
2400	-	N/A	-	N/A	-	N/A	40	N/A	140	N/A
2600	-	N/A	20	N/A	70	N/A	130	N/A		
2800	50	N/A	100	N/A	150	N/A				
3000	130	N/A								
3200										

Single Spans 120mm slab depth

Floor loading: Q imposed 'live' (kPa) G_{sdl} permanent superimposed 'dead' (kPa)

Span (mm)	Q=1.5 G_{sdl}=1		Q=2.5 G_{sdl}=1		Q=3.5 G_{sdl}=1		Q=5.0 G_{sdl}=1		Q=7.5 G_{sdl}=1	
1800	-	-	-	-	-	-	-	-	-	-
2000	-	-	-	-	-	-	-	-	-	20
2200	-	-	-	-	-	-	-	30	-	80
2400	-	-	-	30	-	50	-	90	-	150
2600	-	50	-	80	-	110	-	150	-	220
2800	-	100	-	130	-	170	-	220	60	300
3000	-	160	-	190	-	230	50	290		
3200	-	220	30	260	60	300				
3400	40	280	80	330						
3600	100	350								
3800										

Single Spans 140mm slab depth

Floor loading: Q imposed 'live' (kPa) G_{sdl} permanent superimposed 'dead' (kPa)

Span (mm)	Q=1.5 G_{sdl}=1		Q=2.5 G_{sdl}=1		Q=3.5 G_{sdl}=1		Q=5.0 G_{sdl}=1		Q=7.5 G_{sdl}=1	
2200	-	-	-	-	-	-	-	-	-	-
2400	-	-	-	-	-	-	-	-	-	10
2600	-	-	-	-	-	-	-	20	-	70
2800	-	-	-	10	-	40	-	70	-	130
3000	-	30	-	60	-	90	-	120	-	190
3200	-	80	-	110	-	140	-	180	20	260
3400	-	130	-	160	-	200	10	250		
3600	-	180	-	220	20	260				
3800	10	240	40	280						
4000	60	300								
4200										

Single Spans 160mm slab depth

Floor loading: Q imposed 'live' (kPa) G_{sdl} permanent superimposed 'dead' (kPa)

Span (mm)	Q=1.5 G_{sdl}=1		Q=2.5 G_{sdl}=1		Q=3.5 G_{sdl}=1		Q=5.0 G_{sdl}=1		Q=7.5 G_{sdl}=1	
2400	-	-	-	-	-	-	-	-	-	-
2600	-	-	-	-	-	-	-	-	-	-
2800	-	-	-	-	-	-	-	-	-	10
3000	-	-	-	-	-	-	-	10	-	60
3200	-	-	-	-	-	20	-	60	-	110
3400	-	20	-	40	-	70	-	110	-	180
3600	-	60	-	90	-	120	-	170	-	240
3800	-	110	-	140	-	180	-	230		
4000	-	160	-	200	-	240				
4200	-	220	20	260						
4400	20	260								
4600										

Single Spans 180mm slab depth

Floor loading: Q imposed 'live' (kPa) G_{sdl} permanent superimposed 'dead' (kPa)

Span (mm)	Q=1.5 G_{sdl}=1		Q=2.5 G_{sdl}=1		Q=3.5 G_{sdl}=1		Q=5.0 G_{sdl}=1		Q=7.5 G_{sdl}=1	
3000	-	-	-	-	-	-	-	-	-	10
3200	-	-	-	-	-	-	-	10	-	50
3400	-	-	-	-	-	20	-	50	-	110
3600	-	20	-	40	-	70	-	100	-	160
3800	-	60	-	90	-	110	-	150	-	220
4000	-	110	-	140	-	170	-	210		
4200	-	140	-	180	-	210	20	260		
4400	-	190	-	230	20	260				
4600	-	240	40	280						
4800	50	300								
5000										

6.4 INTERIOR SPAN TABLES

Interior Spans 100mm slab depth

Floor loading: Q imposed 'live' (kPa) G_{sdl} permanent superimposed 'dead' (kPa)

Span (mm)	Q=1.5 G_{sdl}=1		Q=2.5 G_{sdl}=1		Q=3.5 G_{sdl}=1		Q=5.0 G_{sdl}=1		Q=7.5 G_{sdl}=1	
1400	170		170		170		170		170	
	-	N/A	-	N/A	-	N/A	-	N/A	-	N/A
1600	170		170		170		170		170	
	-	N/A	-	N/A	-	N/A		N/A		N/A
1800	170		170		170		170		170	
	-	N/A	-	N/A	-	N/A	-	N/A	-	N/A
2000	170		170		170		170		210	
	-	N/A	-	N/A	-	N/A	-	N/A	-	N/A
2200	170		170		170		180		290	
	-	N/A	-	N/A	-	N/A	-	N/A	-	N/A
2400	170		170		170		240		380	
	-	N/A	-	N/A	-	N/A	-	N/A	-	N/A
2600	170		170		210		310		470	
	-	N/A	-	N/A	-	N/A	-	N/A	-	N/A
2800	170		170		270		380		580	
	-	N/A	-	N/A	-	N/A	-	N/A	-	N/A
3000	170		200		330		470		700	
	-	N/A	-	N/A	-	N/A	-	N/A	-	N/A
3200	180		250		400		560		830	
	-	N/A	-	N/A	-	N/A	-	N/A	-	N/A
3400	220		310		480		660		980	
	-	N/A	-	N/A	-	N/A	-	N/A	-	N/A
3600	260		360		560		770			
	-	N/A	-	N/A	-	N/A	-	N/A		
3800	310		420		650		890			
	-	N/A	-	N/A	-	N/A	-	N/A		
4000	370		490		750					
	-	N/A	-	N/A	-	N/A				
4200	420		560							
	-	N/A	-	N/A						
4400	470									
	-	N/A								
4600	530									
	-	N/A								
4800										

Interior Spans 120mm slab depth

Floor loading: Q imposed 'live' (kPa) G_{sdl} permanent superimposed 'dead' (kPa)

Span (mm)	Q=1.5 G_{sdl}=1		Q=2.5 G_{sdl}=1		Q=3.5 G_{sdl}=1		Q=5.0 G_{sdl}=1		Q=7.5 G_{sdl}=1	
1600	210		210		210		210		210	
	-	-	-	-	-	-	-	-	-	-
1800	210		210		210		210		210	
	-	-	-	-	-	-	-	-	-	-
2000	210		210		210		210		210	
	-	-	-	-	-	-	-	-	-	-
2200	210		210		210		210		210	
	-	-	-	-	-	-	-	-	-	-
2400	210		210		210		210		270	
	-	-	-	-	-	-	-	-	-	-
2600	210		210		210		220		340	
	-	-	-	-	-	-	-	-	-	-
2800	210		210		210		280		430	
	-	-	-	-	-	-	-	-	-	-
3000	210		210		250		340		510	
	-	-	-	-	-	-	-	-	-	-
3200	210		210		300		410		610	
	-	-	-	-	-	-	-	-	-	-
3400	210		230		360		490		720	
	-	-	-	-	-	-	-	-	-	-
3600	210		280		420		570		830	
	-	-	-	-	-	-	-	-	-	-
3800	240		330		490		660		960	
	-	-	-	-	-	-	-	-	-	-
4000	290		380		570		760		1100	
	-	-	-	-	-	-	-	-	-	-
4200	330		440		640		860			
	-	-	-	-	-	-	-	-		
4400	370		490		720		960			
	-	-	-	-	-	-	-	-		
4600	420		550		810					
	-	-	-	-	-	-				
4800	480		620		900					
	-	-	-	-	-	-				
5000	530		690							
	-	-	-	-						
5200	590									
	-	-								
5400										

Interior Spans 140mm slab depth

Floor loading: Q imposed 'live' (kPa) G_{sdl} permanent superimposed 'dead' (kPa)

Span (mm)	Q=1.5 G_{sdl}=1		Q=2.5 G_{sdl}=1		Q=3.5 G_{sdl}=1		Q=5.0 G_{sdl}=1		Q=7.5 G_{sdl}=1	
1800	210		210		210		210		210	
	-	-	-	-	-	-	-	-	-	-
2000	210		210		210		210		210	
	-	-	-	-	-	-	-	-	-	-
2200	210		210		210		210		210	
	-	-	-	-	-	-	-	-	-	-
2400	210		210		210		210		210	
	-	-	-	-	-	-	-	-	-	-
2600	210		210		210		210		230	
	-	-	-	-	-	-	-	-	-	-
2800	210		210		210		210		300	
	-	-	-	-	-	-	-	-	-	-
3000	210		210		210		230		370	
	-	-	-	-	-	-	-	-	-	-
3200	210		210		210		290		450	
	-	-	-	-	-	-	-	-	-	-
3400	210		210		250		350		530	
	-	-	-	-	-	-	-	-	-	-
3600	210		210		300		420		620	
	-	-	-	-	-	-	-	-	-	-
3800	210		230		360		490		720	
	-	-	-	-	-	-	-	-	-	-
4000	210		280		420		570		830	
	-	-	-	-	-	-	-	-	-	-
4200	240		320		490		650		940	
	-	-	-	-	-	-	-	-	-	-
4400	270		370		550		730		1060	
	-	-	-	-	-	-	-	-	-	-
4600	320		420		620		830		1190	
		-	-	-	-	-	-	-	-	-
4800	360		480		700		930			
	-	-	-	-	-	-	-	-		
5000	410		540		780		1030			
	-	-	-	-	-	-	-	-		
5200	460		600		870					
	-	-	-	-	-	-				
5400	520		660		960					
	-	-	-	-	-	-				
5600	580		730							
	-	-	-	-						
5800	640									
	-	-								
6000	700									
	-	-								

Interior Spans 160mm slab depth

Floor loading: Q imposed 'live' (kPa) G_{sdl} permanent superimposed 'dead' (kPa)

Span (mm)	Q=1.5 G_{sdl}=1	Q=2.5 G_{sdl}=1	Q=3.5 G_{sdl}=1	Q=5.0 G_{sdl}=1	Q=7.5 G_{sdl}=1
2000	200	200	200	200	200
	- -	- -	- -	- -	- -
2200	200	200	200	200	200
	- -	- -	- -	- -	- -
2400	200	200	200	200	200
	- -	- -	- -	- -	- -
2600	200	200	200	200	200
	- -	- -	- -	- -	- -
2800	200	200	200	200	200
	- -	- -	- -	- -	- -
3000	200	200	200	200	250
	- -	- -	- -	- -	- -
3200	200	200	200	200	310
	- -	- -	- -	- -	- -
3400	200	200	200	240	390
	- -	- -	- -	- -	- -
3600	200	200	200	300	460
	- -	- -	- -	- -	- -
3800	200	200	200	360	550
	- -	- -	- -	- -	- -
4000	200	200	250	430	640
	- -	- -	- -	- -	- -
4200	200	220	290	490	730
	- -	- -	- -	- -	- -
4400	200	260	340	570	830
	- -	- -	- -	- -	- -
4600	230	310	400	640	930
	-	- -	- -	- -	- -
4800	270	360	450	730	1050
	- -	- -	- -	- -	- -
5000	310	410	520	810	1170
	- -	- -	- -	- -	- -
5200	360	470	580	910	1300
	- -	- -	- -	- -	- -
5400	410	530	650	1010	
	- -	- -	- -	- -	
5600	460	590	720	1110	
	- -	- -	- -	- -	
5800	510	650	790	1430	
	- -	- -	- -	- 10	
6000	570	720	870		
	- -	- -	- -		

Interior Spans 180mm slab depth

Floor loading: Q imposed 'live' (kPa) G_{sdl} permanent superimposed 'dead' (kPa)

Span (mm)	Q=1.5 G_{sdl}=1		Q=2.5 G_{sdl}=1		Q=3.5 G_{sdl}=1		Q=5.0 G_{sdl}=1		Q=7.5 G_{sdl}=1	
2000	250		250		250		250		250	
	-	-	-	-	-	-	-	-	-	-
2200	250		250		250		250		250	
	-	-	-	-	-	-	-	-	-	-
2400	250		250		250		250		250	
	-	-	-	-	-	-	-	-	-	-
2600	250		250		250		250		250	
	-	-	-	-	-	-	-	-	-	-
2800	250		250		250		250		250	
	-	-	-	-	-	-	-	-	-	-
3000	250		250		250		250		250	
	-	-	-	-	-	-	-	-	-	-
3200	250		250		250		250		250	
	-	-	-	-	-	-	-	-	-	-
3400	250		250		250		250		320	
	-	-	-	-	-	-	-	-	-	-
3600	250		250		250		250		390	
	-	-	-	-	-	-	-	-	-	-
3800	250		250		250		300		460	
	-	-	-	-	-	-	-	-	-	-
4000	250		250		250		360		540	
	-	-	-	-	-	-	-	-	-	-
4200	250		250		250		420		610	
	-	-	-	-	-	-	-	-	-	-
4400	250		250		290		480		700	
	-	-	-	-	-	-	-	-	-	-
4600	250		270		340		550		790	
		-	-	-	-	-	-	-	-	-
4800	250		310		390		620		890	
	-	-	-	-	-	-	-	-	-	-
5000	270		360		450		700		990	
	-	-	-	-	-	-	-	-	-	-
5200	310		410		500		780		1100	
	-	-	-	-	-	-	-	-	-	-
5400	360		460		560		860		1220	
	-	-	-	-	-	-	-	-	-	-
5600	410		520		630		950		1340	
	-	-	-	-	-	-	-	-	-	-
5800	450		570		700		1050		1470	
	-	-	-	-	-	-	-	-	-	10
6000	510		630		770		1150			
	-	-	-	-	-	-	-	-		

6.5 END SPAN TABLES

End Spans 100mm slab depth

Floor loading: Q imposed 'live' (kPa) G_{sdl} permanent superimposed 'dead' (kPa)

Span (mm)	Q=1.5 G_{sdl}=1		Q=2.5 G_{sdl}=1		Q=3.5 G_{sdl}=1		Q=5.0 G_{sdl}=1		Q=7.5 G_{sdl}=1	
1400	170		170		170		170		170	
	-	N/A	-	N/A	-	N/A	-	N/A	-	N/A
1600	170		170		170		170		170	
	-	N/A	-	N/A	-	N/A	-	N/A	-	N/A
1800	170		170		170		170		170	
	-	N/A	-	N/A	-	N/A	-	N/A	-	N/A
2000	170		170		170		170		240	
	-	N/A	-	N/A	-	N/A	-	N/A	-	N/A
2200	170		170		170		210		330	
	-	N/A	-	N/A	-	N/A	-	N/A	-	N/A
2400	170		170		190		270		420	
	-	N/A	-	N/A	-	N/A	-	N/A	-	N/A
2600	170		170		250		350		520	
	-	N/A	-	N/A	-	N/A	-	N/A	-	N/A
2800	170		220		310		430		640	
	-	N/A	-	N/A	-	N/A	-	N/A	-	N/A
3000	190		270		380		520		1000	
	-	N/A	-	N/A	-	N/A	-	N/A	-	N/A
3200	240		330		460					
	-	N/A	-	N/A	-	N/A				
3400	290		400		550					
	-	N/A	10	N/A	20	N/A				
3600	350		740							
	20	N/A	30	N/A						
3800	410									
	50	N/A								
4000										

End Spans 120mm slab depth

Floor loading: Q imposed 'live' (kPa) G_{sdl} permanent superimposed 'dead' (kPa)

Span (mm)	Q=1.5 G_{sdl}=1		Q=2.5 G_{sdl}=1		Q=3.5 G_{sdl}=1		Q=5.0 G_{sdl}=1		Q=7.5 G_{sdl}=1	
1600	210		210		210		210		210	
	-	-	-	-	-	-	-	-	-	-
1800	210		210		210		210		210	
	-	-	-	-	-	-	-	-	-	-
2000	210		210		210		210		210	
	-	-	-	-	-	-	-	-	-	-
2200	210		210		210		210		230	
	-	-	-	-	-	-	-	-	-	-
2400	210		210		210		210		300	
	-	-	-	-	-	-	-	-	-	-
2600	210		210		210		250		380	
	-	-	-	-	-	-	-	-	-	-
2800	210		210		230		320		470	
	-	-	-	-	-	-	-	-	-	20
3000	210		210		290		390		570	
	-	-	-	10	-	-	-	20	-	50
3200	210		250		350		470		680	
	-	20	-	30	-	30	-	50	10	90
3400	230		310		410		550		920	
	-	50	-	40	-	50	-	80	30	120
3600	270		360		490		640			
	-	80	-	70	-	80	20	110		
3800	320		420		560					
	-	100	10	90	20	110				
4000	370		490							
	10	130	20	120						
4200	430									
	30	160								
4400	1200									
	-	160								
4600										

End Spans 140mm slab depth

Floor loading: Q imposed 'live' (kPa) G_{sdl} permanent superimposed 'dead' (kPa)

Span (mm)	Q=1.5 G_{sdl}=1		Q=2.5 G_{sdl}=1		Q=3.5 G_{sdl}=1		Q=5.0 G_{sdl}=1		Q=7.5 G_{sdl}=1	
1800	210		210		210		210		210	
	-	-	-	-	-	-	-	-	-	-
2000	210		210		210		210		210	
	-	-	-	-	-	-	-	-	-	-
2200	210		210		210		210		210	
	-	-	-	-	-	-	-	-	-	-
2400	210		210		210		210		210	
	-	-	-	-	-	-	-	-	-	-
2600	210		210		210		210		260	
	-	-	-	-	-	-	-	-	-	-
2800	210		210		210		210		340	
	-	-	-	-	-	-	-	-	-	-
3000	210		210		210		270		410	
	-	-	-	-	-	-	-	-	-	20
3200	210		210		240		340		500	
	-	-	-	-	-	-	-	10	-	40
3400	210		210		300		410		590	
	-	10	-	40	-	20	-	40	-	70
3600	210		260		360		480		690	
	-	50	-	50	-	40	-	60	20	100
3800	230		310		420		560		800	
	-	80	-	70	-	70	10	90	30	130
4000	280		370		490		650			
	-	100	-	80	10	90	30	120		
4200	330		430		570		740			
	20	120	20	100	30	120	40	150		
4400	370		480		630					
	30	130	30	120	40	140				
4600	420		550							
	40	150	40	150						
4800	480									
	60	180								
5000	1230									
	60	180								
5200										

End Spans 160mm slab depth

Floor loading: Q imposed 'live' (kPa) G_{sdl} permanent superimposed 'dead' (kPa)

Span (mm)	Q=1.5 G_{sdl}=1		Q=2.5 G_{sdl}=1		Q=3.5 G_{sdl}=1		Q=5.0 G_{sdl}=1		Q=7.5 G_{sdl}=1	
2000	200		200		200		200		200	
	-	-	-	-	-	-	-	-	-	-
2200	200		200		200		200		200	
	-	-	-	-	-	-	-	-	-	-
2400	200		200		200		200		200	
	-	-	-	-	-	-	-	-	-	-
2600	200		200		200		200		200	
	-	-	-	-	-	-	-	-	-	-
2800	200		200		200		200		220	
	-	-	-	-	-	-	-	-	-	-
3000	200		200		200		200		290	
	-	-	-	-	-	-	-	-	-	-
3200	200		200		200		230		360	
	-	-	-	-	-	-	-	-	-	20
3400	200		200		200		290		440	
	-	-	-	10	-	30	-	10	-	40
3600	200		200		230		350		530	
	-	20	-	40	-	50	-	40	-	60
3800	200		220		280		420		620	
	-	60	-	70	-	60	-	60	10	90
4000	200		270		340		500		720	
	10	100	-	80	-	70	10	80	30	120
4200	230		310		400		570		810	
	20	110	10	100	10	80	20	100	40	140
4400	270		360		460		650		1070	
	30	130	20	110	20	100	40	130	60	170
4600	320		420		530		740			
	40	140	30	130	40	130	50	160		
4800	370	480	600	1460						
	60	160	40	140	50	150	70	180		
5000	420	550	670							
	70	180	60	160	70	180				
5200	480	610								
	90	200	70	190						
5400	540									
	100	220								
5600										

End Spans 180mm slab depth

Floor loading: Q imposed 'live' (kPa) G_{sdl} permanent superimposed 'dead' (kPa)

Span (mm)	Q=1.5 G_{sdl}=1		Q=2.5 G_{sdl}=1		Q=3.5 G_{sdl}=1		Q=5.0 G_{sdl}=1		Q=7.5 G_{sdl}=1	
2000	250		250		250		250		250	
	-	-	-	-	-	-	-	-	-	-
2200	250		250		250		250		250	
	-	-	-	-	-	-	-	-	-	-
2400	250		250		250		250		250	
	-	-	-	-	-	-	-	-	-	-
2600	250		250		250		250		250	
	-	-	-	-	-	-	-	-	-	-
2800	250		250		250		250		250	
	-	-	-	-	-	-	-	-	-	-
3000	250		250		250		250		250	
	-	-	-	-	-	-	-	-	-	-
3200	250		250		250		250		300	
	-	-	-	-	-	-	-	-	-	-
3400	250		250		250		250		370	
	-	-	-	-	-	-	-	-	-	20
3600	250		250		250		300		440	
	-	-	-	-	-	10	-	20	-	40
3800	250		250		250		360		520	
	-	10	-	20	-	40	-	40	-	60
4000	250		250		290		420		610	
	-	40	-	60	-	60	-	60	10	90
4200	250		270		340		480		690	
	-	60	-	80	-	70	10	80	30	110
4400	250		310		400		560		790	
	20	100	10	90	10	80	20	100	40	130
4600	280		370		460		630		890	
	30	120	20	100	20	100	40	120	60	160
4800	330		420		520		720		1000	
	40	130	30	120	40	120	50	150	80	190
5000	370		480		590		800			
	60	150	40	130	50	150	70	170		
5200	430		540		660		890			
	70	170	60	150	70	170	90	200		
5400	480		600		730					
	80	190	70	180	80	200				
5600	540		670							
	100	210	90	200						
5800	600		1840							
	110	230	110	230						
6000	1230									
	110	230								
6000										

7. Construction and detailing

The construction of BONDEK® composite slabs follows simple, familiar and widely-accepted building practice. Workers can readily acquire the skills necessary to install BONDEK® formwork and finish the composite slab. Construction workers will normally be supplied with fully detailed drawings showing the direction of the ribs, other reinforcement and all supporting details.

7.1 SAFETY

BONDEK® is available in long lengths, so large areas can be quickly and easily covered to form a safe working platform during construction. One level of formwork gives immediate protection from the weather, and safety to people working on the floor below. The minimal propping requirements provide a relatively open area to the floor below.

The bold embossments along the top of the ribs of BONDEK® enhance safety by reducing the likelihood of workers slipping.

It is commonsense to work safely, protecting yourself and workmates from accidents on the site. Safety includes the practices you use; as well as personal protection of eyes and skin from sunburn, and hearing from noise. For personal safety, and to protect the surface finish of BONDEK®, wear clean dry gloves. Don't slide sheets over rough surfaces or over each other. Always carry tools, don't drag them.

Occupational health and safety laws enforce safe working conditions in most locations. Laws in every state require you to have fall protection which includes safety mesh, personal harnesses and perimeter guardrails where they are appropriate. We recommend that you adhere strictly to all laws that apply to your site.

BONDEK® is capable of withstanding temporary construction loads including the mass of workmen, equipment and materials all in accordance with AS 3610-1995. However, it is good construction practice to ensure protection from concentrated loads, such as barrows, by use of some means such as planks and/or boards.

7.2 CARE AND STORAGE BEFORE INSTALLATION

BONDEK® is delivered in strapped bundles. If not required for immediate use, stack sheets or bundles neatly and clear of the ground, on a slight slope to allow drainage of water. If left in the open, protect with waterproof covers.

7.3 INSTALLATION OF BONDEK® SHEETING ON-SITE

7.3.1 PROPPING

Depending on the span of a BONDEK® slab, temporary propping may be needed between the slab supports to prevent excessive deflections or collapse of the formwork. A typical diagram for the installation of BONDEK® is depicted in Figure 7.1.

BONDEK® formwork is normally placed directly on prepared propping. Props shall stay in place during the laying of BONDEK® formwork, the placement of the concrete, and until the concrete has reached the strength of 15 MPa.

Propping generally consists of substantial timber or steel bearers supported by vertical props. The bearers shall be continuous across the full width of BONDEK® formwork.

Propping shall be adequate to support construction loads and the mass of wet concrete. The number of props you need for given spans is shown in our tables.

If sheets don't interlock neatly (perhaps due to some damage or distortion from site handling or construction practices) use screws to pull the laps together tightly (see Section 7.3.9, Fastening side-lap joints).

Figure 7.1

BONDEK® Installation guidelines.

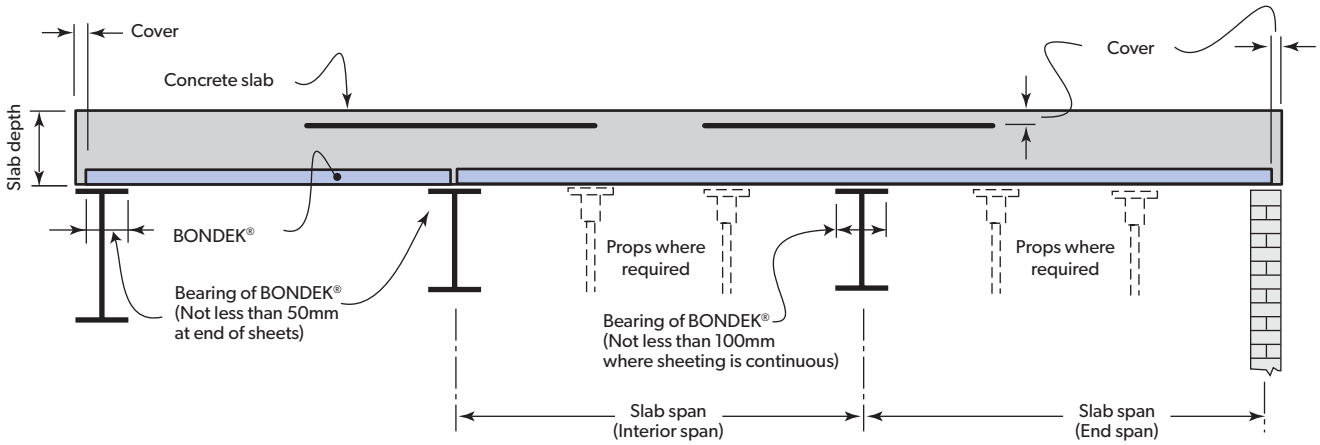

7.3.2 LAYING

BONDEK® shall be laid with the sheeting ribs aligned in the direction of the designed spans. Other details include the following:

- The slab supports shall be prepared for bearing and slip joints as required.
- Lay BONDEK® sheets continuously over each slab span without any intermediate splicing or jointing.
- Lay BONDEK® sheets end to end. Centralise the joint at the slab supports. Where jointing material is required the sheets may be butted against the jointing material.
- Support BONDEK® sheets across their full width at the slab support lines and at the propping support lines.
- For the supports to carry the wet concrete and construction loads, the minimum bearing is 50mm for ends of BONDEK® sheets, and 100mm for intermediate supports over which the sheeting is continuous. It may be reduced to 25mm for concrete band beams as shown in Figure 7.5.
- In exposed applications, treat the end and edges of the BONDEK® sheets with a suitable edge treatment to prevent entry of moisture.

7.3.3 INTERLOCKING OF SHEETS

Overlapping ribs of BONDEK® sheeting are interlocked. Either of two methods can be used in most situations, though variations may also work.

In the first method, lay adjacent sheets loosely in place. Place the female lap rib overlapping the male lap rib of the previous sheet and apply foot pressure, or a light kick, to the female lap rib (Figure 7.2).

In the second method, offer a new sheet at an angle to one previously laid, and then simply lower it down, through an arc (see Figure 7.2).

7.3.4 SECURING THE SHEETING PLATFORM

BONDEK® shall be securely fixed to supporting structures using:

- weights;
- screws or nails into the propping bearers; or
- Spot welding

Take care if you use penetrating fasteners (such as screws and nails) because they can make removal of the props difficult, and perhaps result in damage to the BONDEK®.

7.3.5 INSTALLING BONDEK® ON STEEL FRAMES

BONDEK® may be installed directly on erected structural steelwork.

GENERAL FASTENING OF BONDEK®

To provide uplift resistance or lateral restraint, the sheeting may be fixed to the structural steel using spot welds, or fasteners such as drive nails or self-drilling screws.

At a movement joint, the sheeting is not continuous over the support. If one sheet is fastened at the joint, the other is not.

Place the fixings (fasteners and spot welds) in the flat areas of the pans adjacent to the ribs or between the flutes. The frequency of fixings depends on wind or seismic conditions and good building practice.

One fixing system is as follows.

- At the end of sheets: use a fixing at every rib (Figure 7.3).
- At each intermediate slab support over which the sheeting is continuous: use a fixing at the ribs on both edges (Figure 7.3).
- Fix BONDEK® with drive nails, self-drilling screws or spot welds.
- Drive nails should be powder-activated, steel nails 4mm nominal diameter, suitable for structural steel of 4mm thickness or greater.
- For structural steel up to 12mm thick, use 12-24x38mm self-drilling self-tapping hexagon head screws.
- For structural steel over 12mm thick, pre-drill and use 12-24x16mm hexagon head screws.
- Spot welds should be 12mm minimum diameter. Use 3.25mm diameter cellulose, iron powder AC/DC high penetration electrodes. Surfaces to be welded shall be free of loose material and foreign matter. Where the BONDEK® soffit or the structural steelwork has a pre-painted surface, securing methods other than welding may be more appropriate. Take suitable safety precautions against fumes during welding zinc coated products.

Figure 7.2

Two methods of interlocking two adjacent BONDEK® sheets.

Method 1
Position BONDEK® sheet parallel with previously-laid sheet.
Interlock sheets by applying pressure to either position.

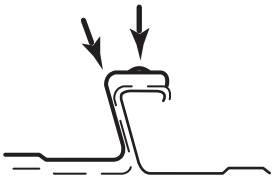

Method 2
Position BONDEK® sheet at an angle.
Interlock sheets by lowering sheet through an arc.

Figure 7.3

Positions for fixing BONDEK® sheet to steel framing.

Fixing at end of sheets.

Fixing at intermediate slab supports over which the sheeting is continuous.

FASTENING COMPOSITE BEAMS

In projects of composite beam construction the BONDEK® sheeting shall be fastened in accordance with AS 2327, Clause 9.2 (Composite beams with slabs incorporating profiled steel sheets). This provision requires a fixing in each pan at each composite beam.

Stud welding through the sheet has been considered a suitable securing method for the sheeting in a composite beam; however some preliminary fixing by one of the methods mentioned above is necessary to secure the sheeting prior to the stud welding. Stud welding should comply with the requirements of AS 1554, Part 2 and AS 2327, Part 1. Some relevant welding requirements are:

- Zinc coating on sheeting not to exceed Z450;
- Mating surfaces of steel beam and sheeting to be cleaned of scale, rust, moisture, paint, overspray, primer, sand, mud or other contamination that would prevent direct contact between the parent material and the BONDEK®;
- Welding shall be done in dry conditions by a certified welder;
- For pre-painted BONDEK® sheets, special welding procedures may be necessary; and
- For sheets transverse to beams, stud welding shall be between pan flutes to ensure there is no gap between mating surfaces.

Note: Welding may void warranty as well as damaging steel support.

7.3.6 INSTALLING BONDEK® ON BRICK SUPPORTS

Brick walls are usually considered to be brittle and liable to crack from imposed horizontal loads. Thermal expansion and contraction, long-term shrinkage, creep effects and flexural deflection of concrete slabs may be sufficient to cause such cracking.

To prevent the cracking, BONDEK® slabs are not usually installed directly on brick supports, although this is not always the case in earthquake construction.

SLIP JOINTS

Generally, a slip joint is provided between BONDEK® and masonry supports (Figure 7.4).

- No fasteners are used between BONDEK® and its support at a slip joint.
- Slip joint material may be placed directly in contact with the cleaned surface of steelwork.
- The top course of masonry should be level, or finished with a levelled bed of mortar to provide an even bearing surface. Lay the top courses of bricks with the frogs facing down.
- The width of a slip joint should not extend beyond the face of the slab support.
- The slip joint material shall have adequate compressive strength to avoid it being compressed into irregularities of the mating surfaces and thus becoming a rigid joint.

Slip joint material shall allow movement to occur, usually by allowing flow under pressure or temperature, however it shall not run or solidify. Generically, the materials are a non-rotting, synthetic carrier impregnated with a neutral synthetic or petroleum-based material. Typical slip joint material is Alcor (a bitumen coated aluminium membrane).

Note: Earthquake zones will require special detailing.

Figure 7.4

Typical movement and slip joints.

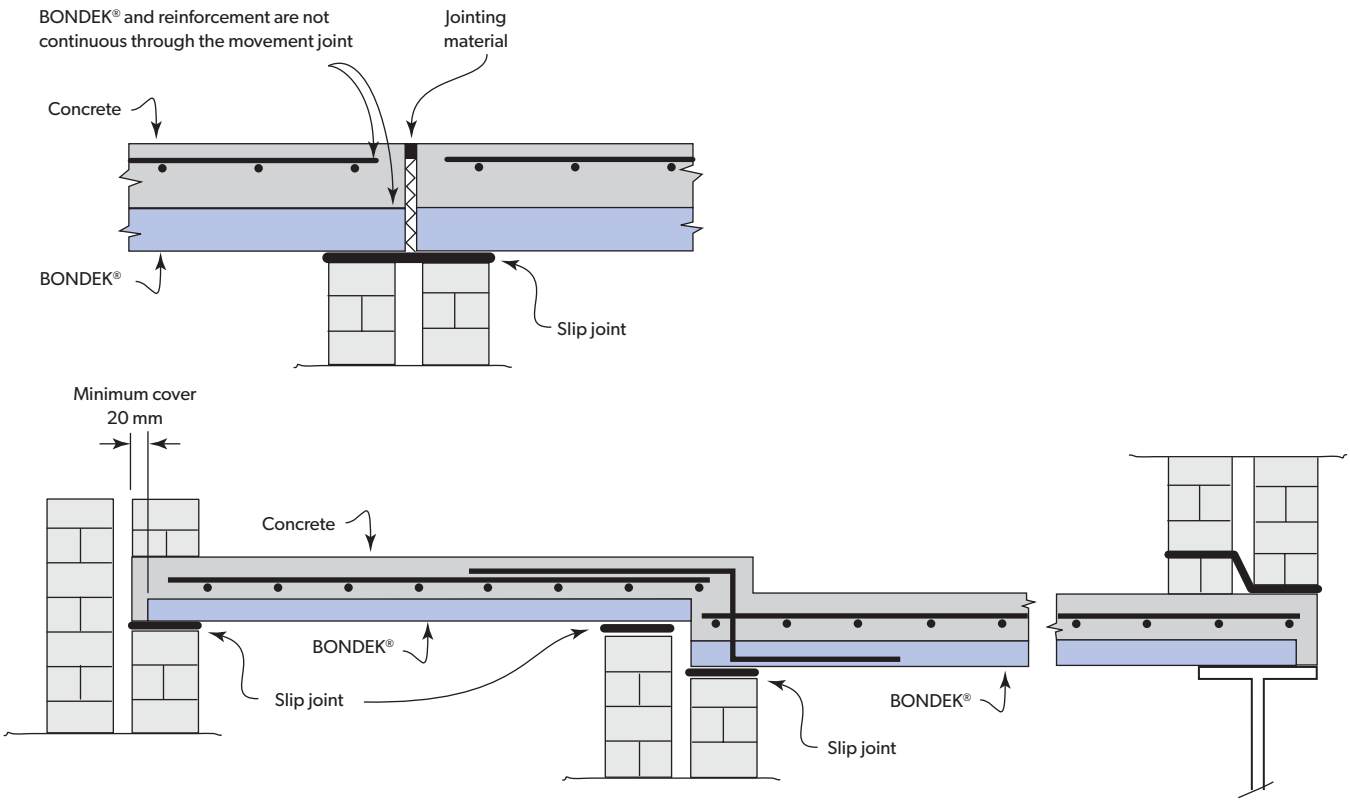

7.3.7 INSTALLING BONDEK® ON CONCRETE FRAMES

When used in concrete frame construction, the BONDEK® sheeting is discontinuous through the supports (Figure 7.5).

7.3.8 PROVISION OF CONSTRUCTION AND MOVEMENT JOINTS

Joints used between BONDEK® slabs generally follow accepted construction practices. Construction joints are included between slabs for the convenience of construction. Movement joints allow relative movement between adjoining slabs. The joints may be transverse to, or parallel with, the span of the BONDEK® slab. Movement joints need a slip joint under the BONDEK® sheeting. (Figure 7.4).

Joints typically use a non-rotting, synthetic carrier impregnated with a neutral synthetic or petroleum based material like Malthoid (a bitumen impregnated fibre-reinforced membrane). Sometimes a sealant is used in the top of the joint for water tightness.

The BONDEK® sheeting and any slab reinforcement are not continuous through a joint.

Design engineers generally detail the location and spacing of joints because joints effect the design of a slab.

7.3.9 FASTENING SIDE-LAP JOINTS

If BONDEK® sheeting has been distorted in transport, storage or erection, side-lap joints may need fastening to maintain a stable platform during construction, to minimise concrete seepage during pouring, and to gain a good visual quality for exposed soffits (Figure 7.6).

7.3.10 CUTTING AND FITTING EDGEFORM

Edgeform is a simple C-shaped section that simplifies the installation of most BONDEK® slabs. It is easily fastened to the BONDEK® sheeting, neatly retaining the concrete and providing a smooth top edge for quick and accurate screeding. We make it to suit any slab thickness.

Edgeform is easily spliced and bent to form internal and external corners of any angle and shall be fitted and fully fastened as the sheets are installed. There are various methods of forming corners and splices. Some of these methods are shown in Figures 7.7 and 7.8.

Fasten Edgeform to the underside of unsupported BONDEK® panels every 300mm. The top flange of Edgeform shall be tied to the ribs every 600mm (or less if aesthetics are required) with straps formed on-site using builder's strapping 25mm x 1.0mm (Figures 7.7 and 7.8). Use 10-16x16mm self-drilling screws.

Make sure that the zinc coating on Edgeform matches the corrosion protection requirements of your job.

Figure 7.5

BONDEK® is discontinuous in concrete frame construction.

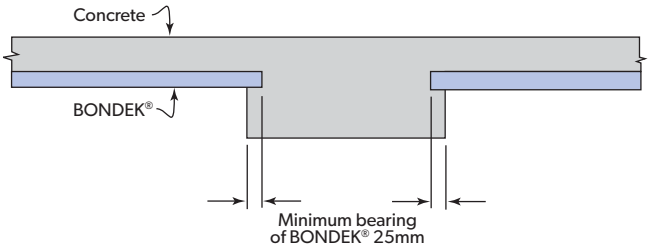

Figure 7.6

Fixing at a side-lap.

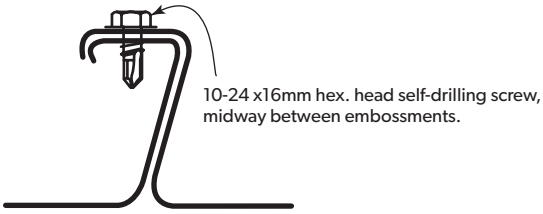

Figure 7.7

Fabrication of formwork is easy with Edgeform.

External corner

1. Notch top flange for the required angle

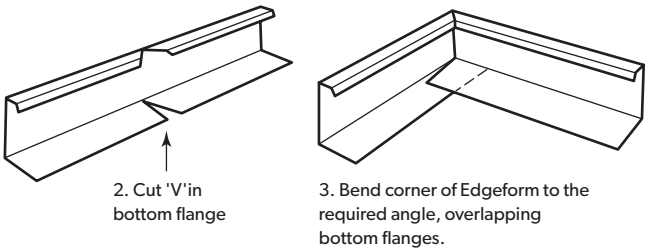

Internal corner

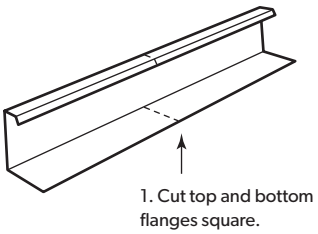

2. Bend Edgeform to required angle.

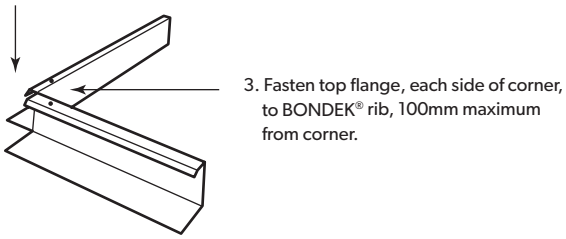

Splicing two pieces

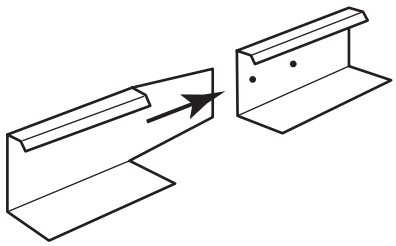

1. Cut-back top and bottom flanges of one Edgeform section approximately 600mm.
2. Cut slight taper on web.
3. Slide inside adjoining Edgeform, and fasten webs with at least 2 screws.

7.3.11 CUTTING OF SHEETING

It is easy to cut BONDEK® sheets to fit. Use a power saw fitted with an abrasive disc or metal cutting blade. Initially lay the sheet with its ribs down, cut through the pans and part-through the ribs, then turn over and finish by cutting the tops of the ribs.

7.3.12 ITEMS EMBEDDED IN SLABS

Generally use items in a manner which complies with AS 3600:2009, Clause 17.4, and Clause 17.5. Included are pipes and conduits, sleeves, inserts, holding-down bolts, chairs and other supports, plastic strips for plasterboard attachment, contraction joint material and many more.

Table 7.1

Location of items within the slab (Figure 7.9).

Items	Location
Pipes parallel with the ribs and other items	• Between the ribs; and • below the top-face reinforcement; and • above the pans and flutes of the BONDEK®
Pipes across the ribs	In the space between the top-face and bottom-face reinforcements (if there is no bottom-face reinforcement, above the top of the ribs)

Minimise the quantity and size of holes through BONDEK® sheeting, by hanging services from the underside of BONDEK® using accessories such as Bon-nut and BONWEDGE®.

Figure 7.8

Typical fastening of Edgeform to BONDEK®.

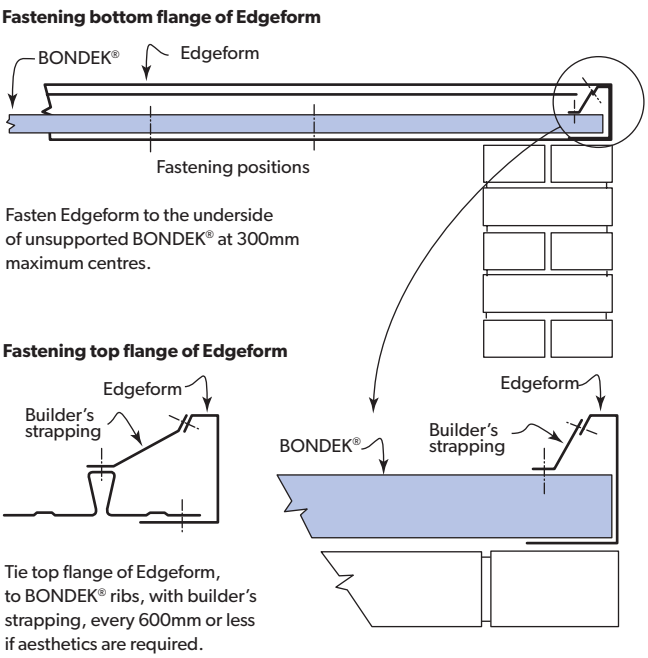

Figure 7.9

Zones for the location of holes through BONDEK®.

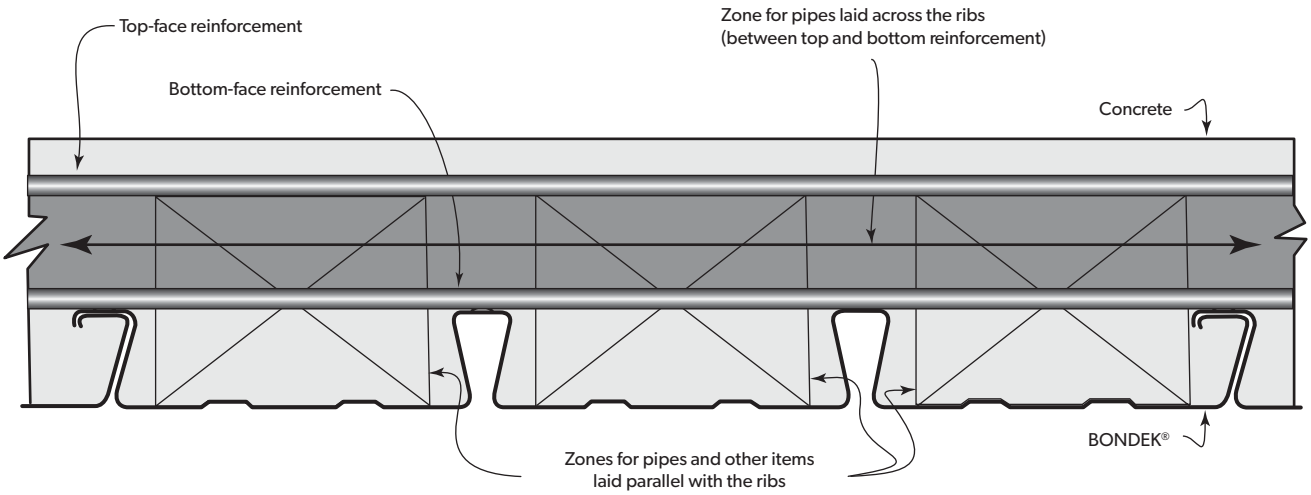

7.3.13 HOLES IN SHEETING

BONDEK® acts as longitudinal tensile reinforcement similarly to conventional bar or fabric reinforcement does in concrete slabs. Consequently, holes in BONDEK® sheets, to accommodate pipes and ducts, reduce the effective area of the steel sheeting and can adversely effect the performance of a slab.

Some guidelines for holes are: (Figure 7.11)

- Place holes in the central pan of any sheet, with a minimum edge distance of 15mm from the rib gap.
- Holes should be round, with a maximum diameter of 150mm.
- For slabs designed as a continuous slab: space holes from an interior support of the slab no less than one tenth of a clear span.

Note: In the event of BONDEK® ribs being cut for larger penetrations, sufficient reinforcing steel and detailing is required to replace lost BONDEK® ribs. Attention to propping at these locations is essential.

7.3.14 SEALING

Seepage of water or fine concrete slurry can be minimised by following common construction practices. Generally gaps are sealed with waterproof tape, or BONFILL® (Figure 7.10) or by sandwiching contraction joint material between the abutting ends of BONDEK® sheet. If there is a sizeable gap you may have to support the waterproof tape.

7.3.15 INSPECTION

BONDEK® sheeting acts as longitudinal tensile reinforcement.

The condition of sheeting should be inspected before concrete is poured.

We recommend regular qualified inspection during the installation, to be sure that the sheeting is installed in accordance with this publication and good building practice.

Figure 7.10

Typical sealing of BONDEK®. Use waterproof tape to seal joints in BONDEK® sheets.

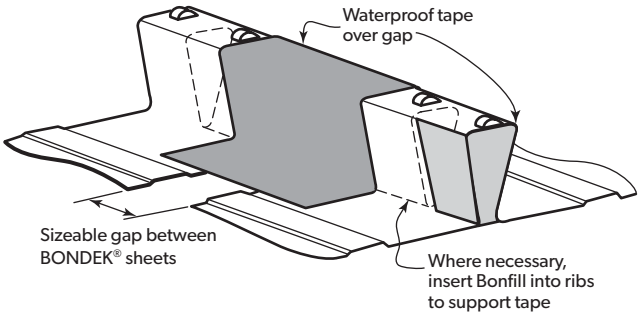

Figure 7.11

Penetration through BONDEK® sheets.

Location of holes in sheet

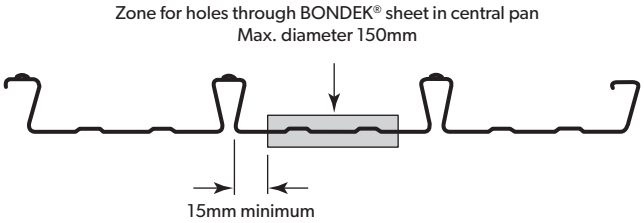

Location of holes relative to supports in continuous slabs

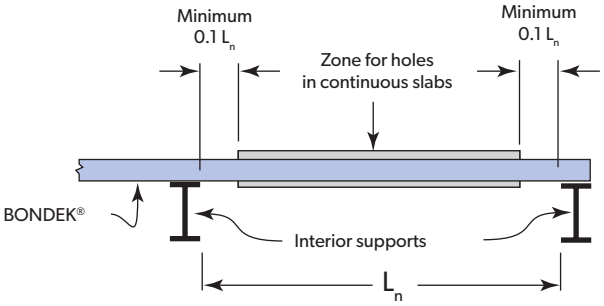

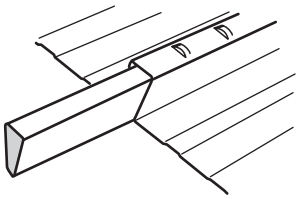

BONFILL®

Polystyrene foam stops concrete and air entering ends of ribs. Stock length: 1200mm. Required: 300mm per sheet of BONDEK®.

END PLUG

Polyethylene end plug stops concrete and air from entering end of BONDEK® ribs.

7.4 POSITIONING AND SUPPORT OF REINFORCEMENT

Reinforcement in slabs carries and distributes the design loads and to control cracking. Reinforcement is generally described as transverse and longitudinal in relation to span, but other reinforcement required for trimming may be positioned in other orientations. Figure 7.12 shows a typical cross-section of a BONDEK® composite slab and associated terms.

Reinforcement shall be properly positioned, lapped where necessary to ensure continuity, and tied to prevent displacement during construction. Fix reinforcement in accordance with AS 3600:2009, Clause 17.2.5 (Fixing).

To ensure the specified minimum concrete cover, the uppermost layer of reinforcement shall be positioned and tied to prevent displacement during construction (Section 4.4 of this Manual).

Splicing of conventional reinforcement shall be in accordance with AS 3600:2009, Clause 13.2 (Splicing of reinforcement).

Where fabric is used in thin slabs, or where fabric is used to act as both longitudinal and transverse reinforcement, pay particular attention the required minimum concrete cover and the required design reinforcement depth at the splices-splice bars are a prudent addition.

Always place chairs and spacers on pan areas. Depending upon the type of chair and its loading, it may be necessary to use plates under chairs to protect the BONDEK®, particularly where the soffit will be exposed. Transverse reinforcement may be used for spacing or supporting longitudinal reinforcement.

7.4.1 TRANSVERSE REINFORCEMENT

Transverse reinforcement is placed at right-angles to the ribs of BONDEK®. Deformed bar or fabric reinforcement may be used. In most applications the transverse reinforcement is for the control of cracks caused by shrinkage and temperature effects, and for locating longitudinal reinforcement.

For ease of construction, reinforcement for control of cracking due to shrinkage and temperature effects is usually fabric reinforcement. It may be located anywhere within the depth of the slab if total thickness does not exceed 250mm. Two layers would be necessary for thicker slabs. Design tables presented in this manual can be used if mesh is located as shown in Figure 7.12

7.4.2 LONGITUDINAL REINFORCEMENT

Longitudinal reinforcement is positioned to carry design loads in the same direction as the ribs of BONDEK®. Deformed bar or fabric reinforcement may be used.

Top-face longitudinal reinforcement is usually located over interior supports of the slab and extends into approximately a third of the adjoining spans.

Bottom-face longitudinal reinforcement is located between supports of the slab but, depending upon the detailing over the interior supports, it may be continuous, lapped, or discontinuous. Bottom-face longitudinal reinforcement may be placed on top of or below transverse reinforcement.

Location of top and bottom-face longitudinal reinforcement in elevated temperatures requires special design. (Refer Section 5 of this Manual)

7.4.3 TRIMMERS

Trimmers are used to distribute the design loads to the structural portion of the slab and/or to control cracking of the concrete at penetrations, fittings and re-entrant corners. Deformed bar or fabric reinforcement may be used.

Trimmers are sometimes laid at angles other than along or across the span, and generally located between the top and bottom layers of transverse and longitudinal reinforcement. Trimmers are generally fixed with ties to the top and bottom layers of reinforcement.

Figure 7.12

Typical cross section of a slab showing common terms.

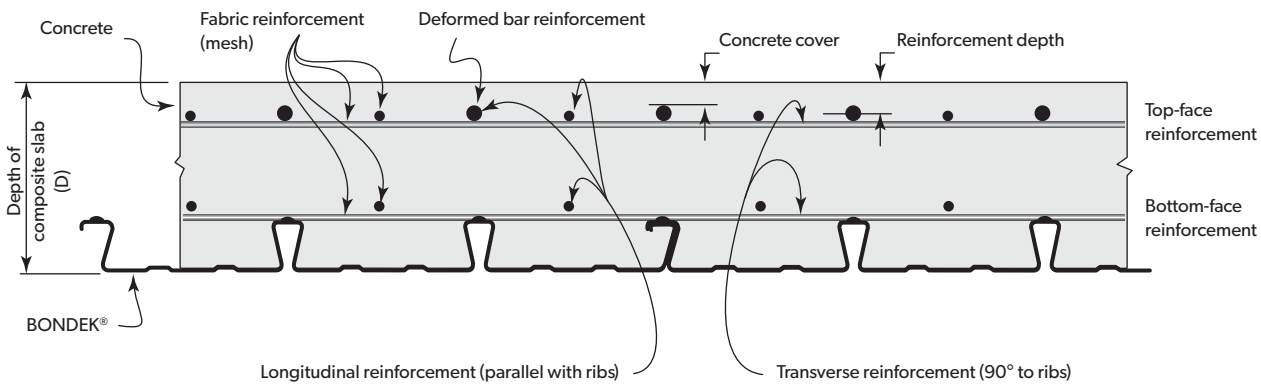

7.5 CONCRETE

7.5.1 SPECIFICATION

The concrete is to have the compressive strength as specified in the project documentation and the materials for the concrete and the concrete manufacture should conform to AS 3600:2007.

7.5.2 CONCRETE ADDITIVES

Admixtures or concrete materials containing calcium chloride or other chloride salts shall not be used. Chemical admixtures including plasticisers may be used if they comply with AS 3600:2009, Clause 17.

7.5.3 PREPARATION OF SHEETING

Before concrete is placed, remove any accumulated debris, grease or any other substance to ensure a clean bond with the BONDEK® sheeting. Remove ponded rainwater.

7.5.4 CONSTRUCTION JOINTS

It is accepted building practice to provide construction joints where a concrete pour is to be stopped. Such discontinuity may occur as a result of a planned or unplanned termination of a pour. A pour may be terminated at the end of a day's work, because of bad weather or equipment failure. Where unplanned construction joints are made, the design engineer shall approve the position.

In certain applications, the addition of water stops may be required, such as in roof and balcony slabs where protection from corrosion of reinforcement and sheeting is necessary.

Construction joints transverse to the span of the BONDEK® sheeting are normally located at the mid-third of a slab span and ideally over a line of propping. Locate longitudinal construction joints in the pan (Figure 7.13).

It may be necessary to locate joints at permanent supports where sheeting terminates. This is necessary to control formwork deflections since formwork span tables are worked out for uniformly distributed loads (UDL) applied on all formwork spans.

Form construction joints with a vertical face - the easiest technique is to sandwich a continuous reinforcement between two boards.

Prior to recommencement of concreting, the construction joint shall be prepared to receive the new concrete, and the preparation method will depend upon the age and condition of the old concrete. Generally, thorough cleaning is required to remove loose material, to roughen the surface and to expose the course aggregate.

7.5.5 PLACEMENT OF CONCRETE

The requirements for the handling and placing of the concrete are covered in AS 3600:2009, Clause 17.1.3.

The concrete is placed between construction joints in a continuous operation so that new concrete is placed against plastic concrete to produce a monolithic mass. If the pouring has to be discontinued for any more than approximately one hour, depending on the temperature, a construction joint may be required.

Start pouring close to one end and spread concrete uniformly, preferably over two or more spans. It is good practice to avoid excessive heaping of concrete and heavy load concentrations. When concrete is transported by wheel barrows, the use of planks or boards is recommended.

During pouring, the concrete should be thoroughly compacted, worked around ribs and reinforcement, and into corners of the edge forms by using a vibrating compactor. Ensure that the reinforcement remains correctly positioned so that the specified minimum concrete cover is achieved.

Unformed concrete surfaces are screeded and finished to achieve the specified surface texture, cover to reinforcement, depths, falls or other surface detailing.

Surfaces which will be exposed, such as Edgeform and exposed soffits, should be cleaned of concrete spills while still wet, to reduce subsequent work.

7.5.6 CURING

After placement, the concrete is cured by conventional methods, for example, by keeping the slab moist for at least seven days, by covering the surface with sand, building paper or polythene sheeting immediately after it has been moistened with a fine spray of water. Follow AS 3600:2009, Clause 17.1.5 (Curing and protection of concrete) and good building practice. Be particularly careful when curing in very hot or very cold weather.

Until the concrete has cured, it is good practice to avoid concentrated loads such as barrows and passageways with heavy traffic.

7.5.7 PROP REMOVAL

Various factors affect the earliest time when the props may be removed and a slab is initially loaded. Methods of calculating times and other guides are given in AS 3610:1995, Clause 5.4.3 (Stage III of construction - Formwork stripping and after placement of concrete).

Figure 7.13

Typical construction joint.

Transverse construction joint

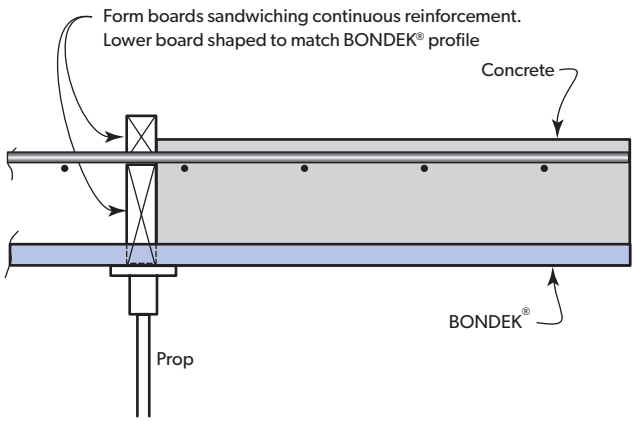

Longitudinal construction joint

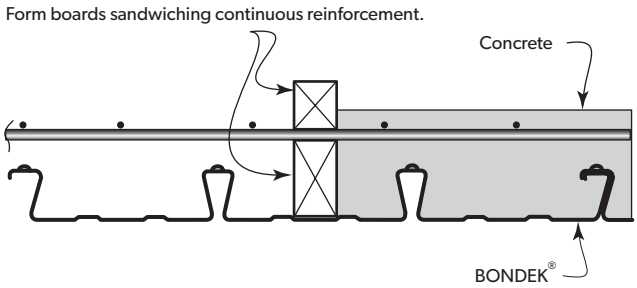

7.6 FINISHING

7.6.1 SOFFIT AND EDGEFORM FINISHES

For many applications, BONDEK® gives an attractive appearance to the underside (or soffit) of a composite slab, and will provide a satisfactory ceiling - for example, in car parks, under-house storage and garages, industrial floors and the like. Similarly, Edgeform will give a suitable edging. Additional finishes take minimal extra effort.

Where the BONDEK® soffit is to be the ceiling, take care during construction to minimise propping marks (refer to Installation - Propping), and to provide a uniform surface at the side-laps (refer to Installation - Fastening side-lap joints).

Exposed surfaces of BONDEK® soffit and Edgeform may need cleaning and/or preparation for any following finishes. The cleaning preparations are shown in Table 7.2.

7.6.2 PAINTING

Various painting systems are available for use with zinc coatings to provide a decorative finish and/or to provide an appropriate corrosion protection system.

There are recommendations suitable for painting soffits and edges in Painting zinc-coated or ZINCALUME® steel sheet (BlueScope Lysaght technical information booklet). Field (on-site) painting systems from that booklet are summarised in Table 7.3.

The performance of a paint system is influenced by the quality of preparation and application - closely follow the paint manufacturer's instructions.

For painted soffits, it may be preferable to cover the gaps of the ribs prior to painting. BONSTRIP® snaps into the gaps of the ribs of the BONDEK® sheeting and produces an attractive appearance (Figure 7.14).

The gap at the side-lap joint can be filled with a continuous bead of silicon sealant prior to painting.

Note: Overpainting will void any warranties issued by BlueScope Steel. Paint manufacturers' approved applicators provide the performance warranty for overpainted products. Refer BlueScope Steel Technical Bulletin TB-2 for further information.

7.6.3 PLASTERING

Finishes such as vermiculite plaster can be applied directly to the underside of BONDEK® with the open rib providing a positive key. With some products it may be necessary to treat the galvanised steel surface with an appropriate bonding agent prior to application.

7.6.4 ADDITION OF FIRE PROTECTIVE COATING

Where a building is being refurbished, or there is a change of occupancy and floor use, you may need to increase the fire resistance of the BONDEK® composite slabs. This may be achieved by the addition of a suitable fire-protection material to the underside of the slabs. The open ribs of BONDEK® provide a positive key to keep the fire spray in position. Such work is beyond the scope of this manual.

Table 7.2

Preparation of soffits and Edgeform.

Pre-painted soffit or edge	• Remove all protective plastic strips from rolled comers. • Concrete seepage marks and dirt may be removed by washing with water. For stubborn stains, use a mild solution of pure soap or non-abrasive detergent in warm water. • Grease or oil deposits may be removed by washing as described above. For stubborn deposits contact us for advice. Never use abrasive or solvent type cleaners (like turps, petrol or kerosene) on pre-painted steel.
Galvanised soffit or edge	• Light corrosion marks indicated by white to grey staining due to wet bundles may be removed with a kerosene rag. If this is unsatisfactory, then wire brushing may be necessary. Take care not to unnecessarily remove any of the zinc coating. If zinc coating is removed, a suitable paint system must be used. • Grease or oil deposits may be removed with a kerosene rag. For stubborn deposits, use paint thinners. • Concrete seepage marks and dirt to be removed by washing as described above.

Table 7.3

Painting BONDEK® soffits and Edgeform.

Exposure classification (AS 3600)	Primer		Finish	
	Type	Application	Type	Application
A1 & A2	Water-borne acrylic (1 coat)	Brush	Water-borne acrylic (2 coats)	Brush
B1	2-pack etch primer (1 coat)	Brush or spray	Alkyd (2 coats)	Brush or spray
			Oleoresinous/ micaceous iron oxide (2 coats)	Brush or spray
	Zinc dust/zinc oxide (1 coat)	Brush or spray	Alkyd (2 coats)	Brush or spray
			Oleoresinous/ micaceous iron oxide (2 coats)	Brush or spray
B2	2-pack etch primer (1 coat)	Brush or spray	High build vinyl (2 coats)	Spray
			2-pack polyurethane (2 coats)	Brush or spray

Figure 7.14

BONSTRIP® makes an attractive cover for the gaps formed by BONDEK® ribs.

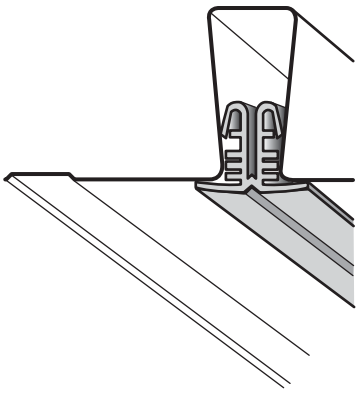

7.7 SUSPENDED CEILINGS AND SERVICES

7.7.1 PLASTERBOARD

A BONDEK® soffit may be covered with plasterboard by fixing to battens or direct fixing using BONSTRIP®.

OPTION 1

Steel ceiling battens can be fixed directly to the underside of the slab using powder-actuated fasteners. The plasterboard is then fixed to ceiling battens in the usual way (Figure 7.15).

Plaster-based finishes can be trowelled smooth, or sprayed on to give a textured surface. They can also be coloured to suit interior design requirements.

Figure 7.15

Fixing plasterboard to BONDEK®.

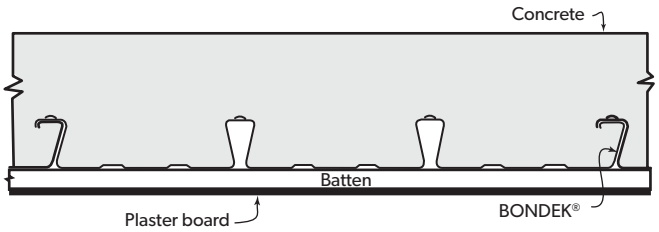

OPTION 2:
Figure 7.16

Direct fix to BONSTRIP®.

Plasterboard may also be screwed directly into BONSTRIP® using appropriate fasteners.

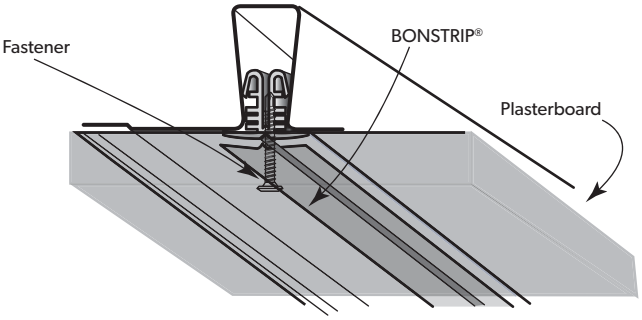

Note: With this detail attention to formwork, deflection limitations and service routes is critical.

7.7.2 SUSPENDED CEILING

Ceilings are easily suspended from BONDEK® slabs using M6 Bon-nut suspension nuts, or BONWEDGE® suspension brackets which comply with the load capacity requirements of AS 2785. Threaded rods or wire hangers are then used to support the ceiling. Alternatively, hangers may be attached to eyelet pins powder-driven into the underside of the slab, or to pigtail hangers inserted through pilot holes in the BONDEK® sheeting before concreting (Figure 7.21).

7.7.3 SUSPENDED SERVICES

Services such as fire sprinkler systems, piping and ducting are easily suspended from BONDEK® slabs using Bon-nut suspension nuts which comply with the load capacity requirements of AS 2118 (Figure 7.21).

7.8 FIRE STOPPING DETAILING

7.8.1 AT REINFORCED BLOCK WALLS

When using BONDEK® with reinforced block walls the bearing length is often reduced to 25mm absolute minimum to allow adequate bearing prior to core filling from the deck level and continuation of wall reinforcement. (An alternative is to provide holes through pans over every blockwork core.) The BONDEK® sheets still require fixing to the support structure. To maintain the fire rating level (FRL) of the (often reinforced) blockwork, the BONFILL® can be displaced relative to the end of the BONDEK® sheets as shown in Figure 7.17 to maintain the minimum through wall FRL requirement.

7.8.2 FIRE COLLARS

BONDEK® with its flat pan profile allows easy integration of proprietary fire collars that maintain the fire rating level through service penetrations as shown in Figure 7.18. They are generally up to 150mm diameter and are installed between the composite BONDEK® ribs. Fire collars are fixed pre-pour usually by the plumbing contractor with screws to the BONDEK® pan which is cut out after the pour is complete with the fire collar cast in place.

Figure 7.18

Proprietary fire collar fixed to BONDEK® pan.

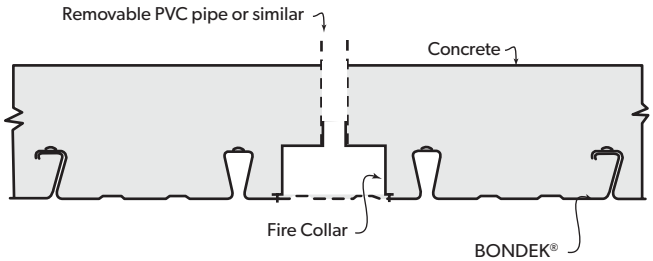

Figure 7.17

BONDEK® fire detail at reinforced block walls.

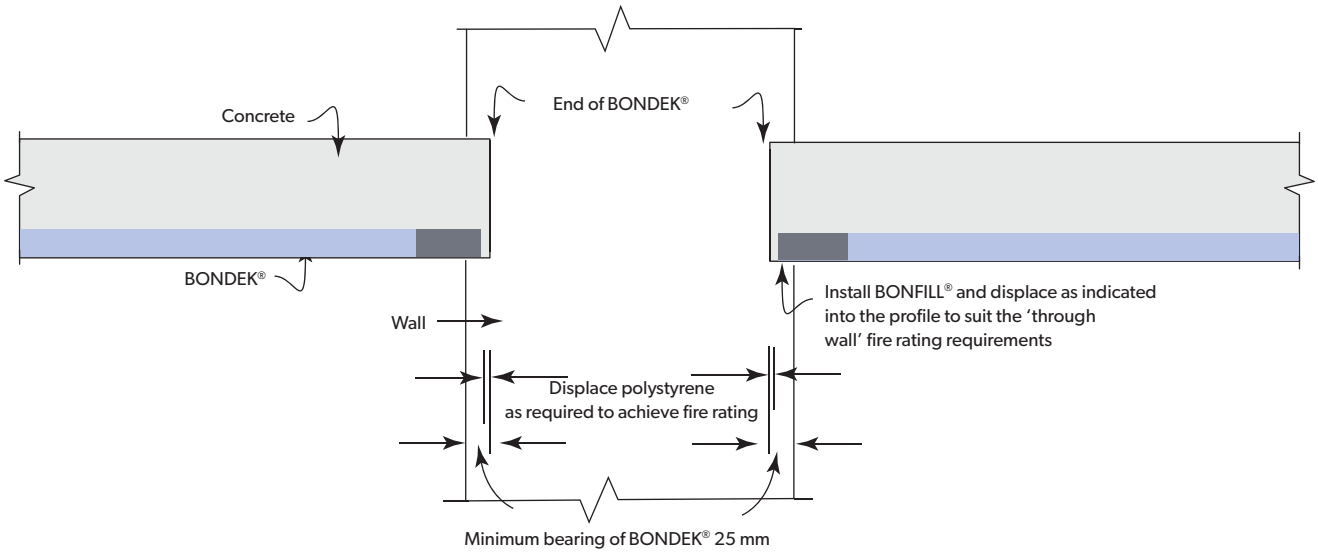

7.9 BONDEK® IN POST TENSIONED CONCRETE FRAMED CONSTRUCTION

7.9.1 BONDEK® PT CLIP (POST TENSIONED)

BONDEK® is commonly used as permanent formwork in post tensioned (PT) solutions. The post tensioning clip locks into the BONDEK® pan providing a secure anchoring point for the post tensioning duct chairs to be fixed onto. These clips will not move or dislodge during a concrete pour which is crucial for the post tensioning profile shape and structural performance.

In particular central location of tendons between BONDEK® ribs is necessary to achieve desired fire rating - presence of BONDEK® will not affect fire performance of PT slabs for up to 3 hours fire rating.

Figure 7.19

PT clip and chair assist in the correct positioning of post tensioning duct/cables.

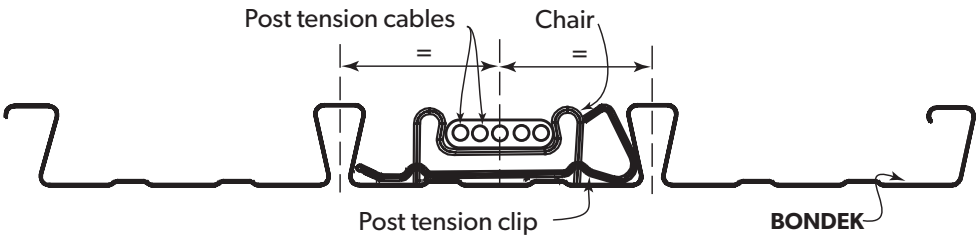

7.9.2 BONDEK® RIB REMOVAL AT PT ANCHOR POINTS OR STRESSING PANS

With post tensioned solutions dead and live anchor points can be located within slabs at a point over the BONDEK® profile. To position bursting reinforcement or to install a stressing pan within a slab a short length of BONDEK® rib is sometimes removed using a grinder or plasma cutter on site. This provides better end anchorage zone stress distribution to avoid stress concentrations between ribs. This zone where the rib is removed is sealed (usually with tape) before placing the post tensioning end termination component. (Refer to Sealing, Section 7.3.14 and Figure 7.10).

7.9.3 POSITIONING OF PT DUCT/CABLES IN TRANSVERSE DIRECTION

Figure 7.20

Positioning of PT duct/cables in transverse direction.

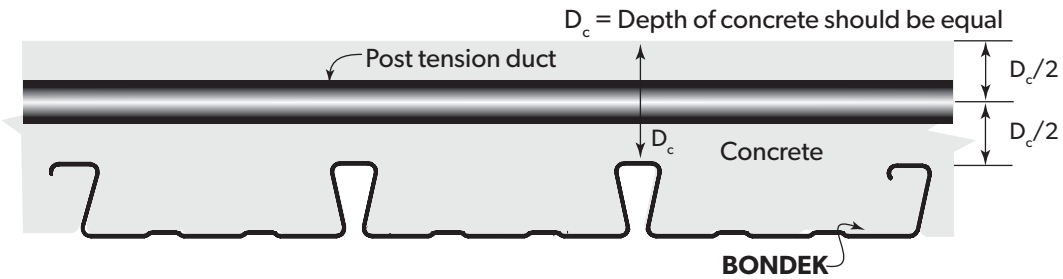

Notes:

1. Position transverse duct/cables equidistant between top of BONDEK® ribs and the surface of the concrete.
2. Equidistant location of duct/cables is necessary at BONDEK® open ribs and side-lap joint locations to ensure uniform compression stress across composite slab depth.

7.10 ARCHITECTURAL MATTERS

Where structural decking soffits are visible and in particular where BRITEWITE® pre-painted finishes are employed, special care must be taken when lifting, handling, storing on-site and laying this product. The underside is intended as an aesthetic feature of the installed product. For this reason, the following architectural aims need to be considered.

RIB ALIGNMENT:

Or "registration" of ribs between adjacent spans. Be careful to align the BONDEK® ribs where sheets meet over supporting beams so that when viewing the exposed product from the underside, the product presents uniform shadow lines between bays. Ensure that the sheets are laid in accordance with Section 7.3.2 end to end (or butting against jointing material) and have the ribs aligned.

FIXING:

No activities should be carried out on the topside of the installed BONDEK® that might have adverse affects on the bottom side, such as puddle welding or penetrating the deck with fasteners in locations where they will be visible from the underside. Securing the decking plan to the supporting structure as recommended in Section 7.3 will prevent movement of sheets and reduce slurry leakage under the sheets during pouring and vibration of the concrete.

SLURRY LEAKAGES:

During the concrete pour ensure there is no concrete leakage which might cause unsightly stains on the underside paint finish. Refer to Section 7.3.14 regarding sealing at ends and laps and Section 7.3.9 regarding side-lap fixing. Foam tape should be utilised under the deck edges over the supporting structure (particularly in concrete frames) to minimise leakage under the sheets.

HANDLING:

Section 7.2 covers care and storage before installation. With architectural finishes such as BRITEWITE®, which has plastic CORSTRIP® or SPOT-STIK® (or equivalent) applied to the decking soffit, special care is still required to minimise scratching and marking prior to placement. (i.e. during transport, site storage and handling of bundles and placement of individual sheets).

VISUAL QUALITY:

a) Prop marking - Care should be taken to minimise prop marking through maintaining the quality of temporary propping support surfaces and adopting deflection ratio limitations in accordance with Section 3.2. Care in controlling construction live loads such as workman, mounding of concrete and stacked materials will also improve the visual quality.

b) Side-lap - Refer section 7.3.9 where visual quality of exposed soffits can be enhanced with side-lap fixing.

FINISHING:

Section 7.3.14 covers gap sealing of the decking profile and jointing details. Utilising waterproof tape, BONFILL®, and end plugs will control seepage of water or fine concrete slurry.

PROTECTIVE FILMS:

BRITEWITE® is DECKFORM® steel pre-painted with a SURFMIST® colour finish and has a CORSTRIP® protective film applied prior to roll forming. Store out of direct sunlight for ease of removal. It is generally installed before CORSTRIP® removal which tends to come off in narrow strips and typically has to be cut away from the laps and supports with a blade.

The removal of protective film can be made easier and soffit finish improved through the use of SPOT-STIK® coating (or equivalent) applied only to the flat pan of the profile during roll forming. The BRITEWITE® is supplied with a backing coat to prevent scuffing of the SURFMIST® colour soffit finish prior to roll forming. SPOT-STIK® coating (or equivalent) is subject to enquiry and currently only available in NSW on permanent formwork applications.

7.11 ACCESSORIES

Figure 7.21

BONDEK® accessories.

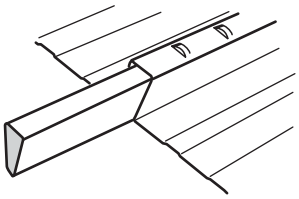

BONFILL®

Polystyrene foam stops concrete and air entering ends of ribs. Stock length: 1200mm. Required: 300mm per sheet of BONDEK®.

RIB END PLUG (QLD, VIC & NSW)

Polyethylene end plug minimises concrete slurry seeping through.

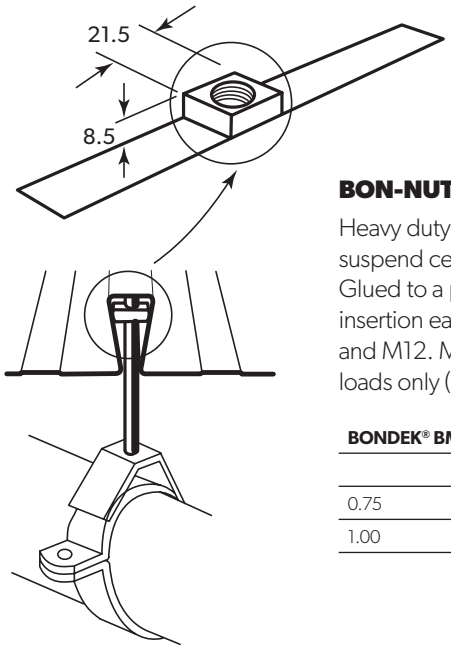

BON-NUT

Heavy duty square nut to suspend ceilings or services. Glued to a paper strip it makes insertion easy. Threads: M8, M10 and M12. M6 is available for light loads only (2.7 kN or less).

BONDEK® BMT	Safe Load
	kN
0.75	4.4
1.00	6.7

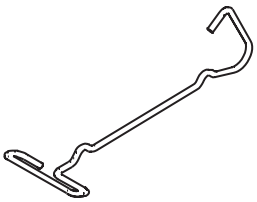

PT HOLD DOWN CLIP

Allows hold down of post-tensioning ducts.

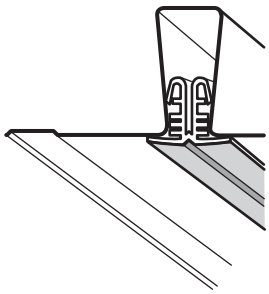

BONSTRIP®

Plastic trim to cover gaps formed by ribs. Used when underside of BONDEK® forms an exposed ceiling. Stock length: 3000mm. Allows plasterboard to be fixed to BONDEK®.

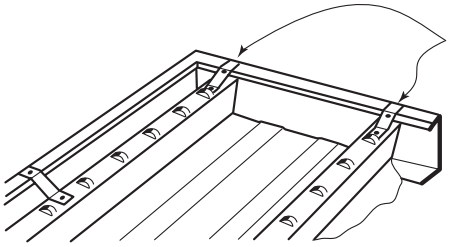

Brackets from builders strapping

Straps formed on-site using builders strapping to secure top flange of the Edgeform.

25mm x 1.0mm fixed with #10-16x16 hex. head Tek screws with drill point. Required: one every 600mm or less if aesthetics are required.

EDGEFORM

A galvanised section that creates a permanent formwork at the slab edges—cut, mitred and screwed on site. 1.0mm BMT - up to 145mm slab depth. 1.2mm BMT - 150 - 175mm slab depth.

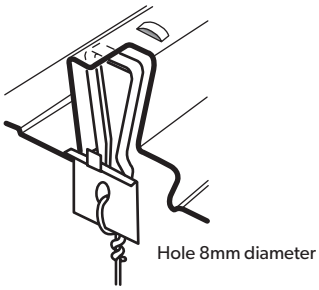

BONWEDGE®

Lightweight bracket for rods to suspend ceilings or services (other than fire sprinkler systems). Max. load: 100kg.

Configuration	Loading	Safe Load
		kN
Single BONWEDGE®	Eccentric	1.0
Double BONWEDGE®	Eccentric	1.3
Double BONWEDGE®	Central	1.7

8. References

AS/NZS 1170.0:2002
General principles

AS/NZS 1170.1:2002
Permanent, imposed and other actions

AS 1397:2011
Continuous hot-dip metallic coated steel sheet and strip - Coatings of zinc and zinc alloyed with aluminium and magnesium

AS 1530.4:2005
Methods for fire tests on building materials, components and structures - Fire-resistance tests of elements of building construction

AS 2327.1:2003
Composite structures - Simply supported beams

AS 3600:2009
Concrete structures

AS/NZS 4600:2005
Cold-formed steel structures

AS 3610:1995
Formwork for concrete

AS 3610 Supp 2 :1996
Formwork for concrete - Commentary

Bennetts, I.D., Proe, D., Patrick, M. & Poon, S.L., Composite slabs incorporating BONDEK® II sheeting designed for fire resistance in accordance with AS 3600, Report No. BHP/ENG/R/91/003/PS64R, BHP Research, Melbourne Laboratories, November 1991

EN 1994-1-1:2005
Design Of Composite Steel And Concrete Structures - Part 1-1: General Rules And Rules For Buildings

EN 1994-1-2:2005
Design of Composite Steel and Concrete Structures - Part 1-2: General Rules - Structural Fire Design

EN 1992-1-1:2004
Design of Concrete Structures - Part 1: General Rules and Rules for Buildings

Bennetts, I.D., Filonov, A. A., "Investigation of the behaviour of composite slabs in fire", Australian Structural Engineering Conference, 11-14 September, 2005, Newcastle, Engineers Australia

Appendix A: Material specifications

BONDEK® sheets are readily available, custom-cut, in any length from 600mm up to 19,500mm (length tolerance +0, -10mm) Ask us about longer lengths up to a maximum of 25,000mm. To maximise speed of installation and get better performance, use lengths of BONDEK® that cover multiple spans.

SHEETING

BONDEK® is available in the following gauges base metal thicknesses (BMT) 0.6, 0.75, 0.9* and 1.0mm. It is roll-formed from hot dipped, zinc coated, high tensile zinc hi-ten® steel. The steel conforms to AS 1397, grade G550 and is available in Z350 and Z450* coatings (350g/m^2 or 450g/m^2 zinc coating distributed between both sides i.e. 175 or 225g/m^2 per side).

In special circumstances BONDEK® may be obtained:

- in other base metal thickness
- with non-standard zinc coating mass
- with a pre-painted finish to the underside, called BRITEWITE®

CONCRETE SPECIFICATION

ρ_c = 2400kg/m^3 (normal density)

See Table A1 for strengths.

Reinforcement specification

- For negative and fire reinforcement D500N grade is used.
- For shrinkage D500L reinforcement is used.

Our design tables assume the use of D500N 12mm diameter bars for negative and fire reinforcement. If you want to use other grades or diameters, run the BONDEK® software. The diameter of reinforcing bars should not exceed 20mm.

SHEAR CONNECTORS

Refer to AS 2327.1 to design composite steel beams.

*Availability is subject to enquiry.

Table A1

Concrete strengths.

Exposure Classification	Minimum concrete compressive strength
A1 & A2	f^1_c = 25 MPa
B1	f^1_c = 32 MPa
B2	f^1_c = 40 MPa

PRODUCT DESCRIPTIONS

- All descriptions, specifications, illustrations, drawings, data, dimensions and weights contained in this catalogue, all technical literature and websites containing information from Lysaght are approximations only. They are intended by Lysaght to be a general description for information and identification purposes and do not create a sale by description. Lysaght reserves the right at any time to:

  (a) supply Goods with such minor modifications from its drawings and specifications as it sees fit; and
  (b) alter specifications shown in its promotional literature to reflect changes made after the date of such publication.

DISCLAIMER, WARRANTIES AND LIMITATION OF LIABILITY

- This publication is intended to be an aid for all trades and professionals involved with specifying and installing Lysaght products and not to be a substitute for professional judgement.
- Terms and conditions of sale available at local Lysaght sales offices.
- Except to the extent to which liability may not lawfully be excluded or limited, BlueScope Steel Limited will not be under or incur any liability to you for any direct or indirect loss or damage (including, without limitation, consequential loss or damage such as loss of profit or anticipated profit, loss of use, damage to goodwill and loss due to delay) however caused (including, without limitation, breach of contract, negligence and/or breach of statute), which you may suffer or incur in connection with this publication.

© Copyright BlueScope Steel Limited 21 January, 2016

WWW.LYSAGHT.COM

Technical enquiries:
steeldirect@bluescopesteel.com or call 1800 641 417

LYSAGHT®, ZINCALUME®, BONDEK®, BONFILL®, BONWEDGE®, BONSTRIP®, BRITEWITE®, DECKFORM® and BlueScope® are registered trademarks of BlueScope Steel Limited, ABN 16 000 011 058. The LYSAGHT® range of products is exclusively made by or for BlueScope Steel Limited trading as Lysaght.

9 320075 080709

BLUESCOPE

LYT0014 21.01.16

DOSHIN®
RUBBER ENGINEERING

Bearing Systems

INTRODUCTION

OBJECTIVE OF THIS CATALOGUE

This catalogue presents current information on pot bearings by Doshin Rubber and Technical Joint Venture Partner D.S.TechStar,Inc, USA.The objective of this catalogue is to guide the designer, site engineer, and contractor in all matters relating to the selection and installation of pot-type bridge bearings.

PRINCIPLES OF A POT BEARING

Pot-type bridge bearings – fixed or sliding – can accommodate rotations of up to 0.040 radians in any direction and can be designed to accommodate any horizontal load or displacement.

A pot bearing consists of a shallow/hollow steel cylinder, or pot, with an elastomeric disc, slightly shorter than the steel cylinder, fitted snugly inside. A steel disc, or piston, fits inside the steel cylinder and bears on the elastomeric disc. Flat brass sealing rings are used to contain the elastomer inside the pot. The elastomer behaves like a viscous fluid flowing within the pot as rotation occurs.

BEARING INSTRUMENTATION – SMART BEARINGS

All Doshin Bearings can be equipped with Health Monitoring instrumentation to accurately measure performance data in real time (via an internet connection). With Doshin's 'Smart' Bearing concept, data such as vertical load, rotation and translation can be constantly measured and viewed online or tied into an overall structure's monitoring system. This information gives an overview of the bearings' performance while functioning on the structure. For more information about bearing instrumentation, please contact us today at doshin@kossan.com.my.

DESIGN AND DETAILING

The advanced design of Doshin Rubber pot bearings is based on the latest developments in bearing engineering and is accomplished with the help of finite element analysis. Doshin Rubber pot bearings can be designed in accordance with AASHTO Allowable Stress Design, Load Reduction Factor Design (LRFD), BS 5400, DIN standards, or to the Japanese Code (JIS).

The detailing of the shop drawings for Doshin Rubber pot bearings is performed on a modern Computer Aided Drawing (CAD) system that enables the adaptation of pot bearings to fit almost any combination of loads, movements, and rotations. Special dimensional conditions can also be satisfied.

STANDARD POT BEARINGS AND INDIVIDUAL DESIGN

The following catalogue pages show standard pot bearings to the proposed CEN Code. These pot bearings are only a fraction of the wide range of bearings that Doshin Rubber can produce. If full design data is provided, Doshin Rubber will design and optimize every pot bearing individually. Contact our Engineering Department for specialized designs.

TYPES OF POT BEARING

TA SERIES (FREE SLIDIN G)

This type is movable in all directions but cannot accommodate horizontal forces.

TA SERIES (FIXED)

This type is immovable and can accommodate horizontal forces from any direction.

TC SERIES (CENTER GUIDED SLIDING)

This type is movable in one direction only and can accommodate horizontal forces perpendicular to this direction.

MOVEMENT

The dimensions shown in the following tables of this catalogue allow for a sliding movement of 100 mm. Variations in total movement require that the top sliding plate be adjusted accordingly.

ROTATION

The dimensions shown in the following tables represent pot bearings designed with a rotational capacity of 0.015 radians. Larger rotations of up to 0.040 radians are possible but require revised bearing heights as compared to the following tables. Accordingly, rotations of 0.010 radians will result in dimensions less than the following tables indicate.

TA SERIES (FREE SLIDING)

TECHNICAL DATA

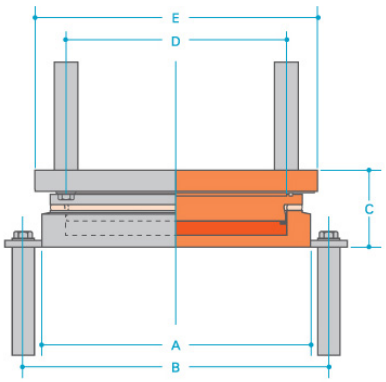

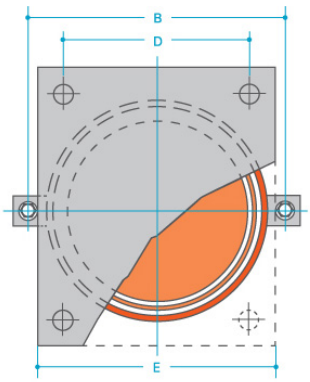

Capacity (Tons)	A (mm)	B (mm)	C (mm)	D (mm)	E (mm)
50	230	290	85	240	250
100	300	360	89	270	320
150	350	410	98	290	370
200	370	430	105	330	390
250	420	480	107	350	450
300	460	520	111	370	480
350	500	560	115	410	520
400	530	590	120	430	550
450	560	620	123	450	580
500	600	660	128	480	620
600	640	700	132	530	660
700	690	750	137	580	710
800	740	800	139	630	760
900	780	840	142	650	800
1000	820	880	145	680	840
1200	900	960	150	730	920
1400	980	1040	153	800	1000
1600	1060	1120	160	950	1080
1800	1140	1200	170	1010	1160
2000	1220	1280	180	1060	1240
2200	1260	1320	190	1110	1280
2400	1300	1360	196	1160	1320
2600	1340	1420	200	1210	1360
2800	1400	1460	207	1260	1420
3000	1460	1540	213	1320	1480
3500	1520	1580	228	1380	1540
4000	1620	1680	242	1440	1640
4500	1720	1780	256	1500	1740
5000	1820	1880	264	1560	1840

Horizontal force = 15%
Rotation = .015 radians
Anchors = socket + bolts

Movement will affect length of slide plate
Sole & masonry plates can be added to design

TF SERIES (FIXED)

TECHNICAL DATA

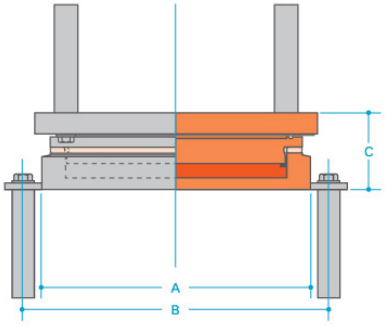

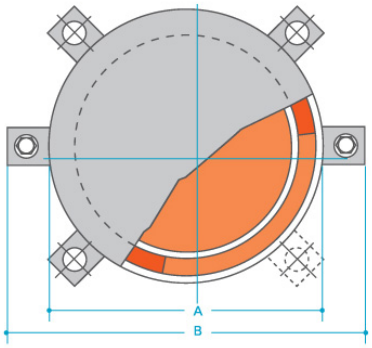

Capacity (Tons)	A (mm)	B (mm)	C (mm)
50	230	290	56
100	300	360	64
150	350	410	72
200	370	430	76
250	420	500	80
300	460	540	87
350	500	580	89
400	530	610	92
450	560	640	97
500	600	680	99
600	640	720	102
700	690	770	110
800	740	820	115
900	780	860	122
1000	820	900	126
1200	900	980	135
1400	980	1060	148
1600	1060	1140	156
1800	1140	1220	160
2000	1220	1300	171
2200	1260	1340	181
2400	1300	1380	195
2600	1340	1440	200
2800	1400	1500	215
3000	1460	1560	225
3500	1520	1620	235
4000	1620	1720	245
4500	1720	1820	262
5000	1820	1920	270

Horizontal force = 15%
Rotation = .015 radians
Anchors = socket + bolts

Movement will affect length of slide plate
Sole & masonry plates can be added to design

TC SERIES (CENTER GUIDED SLIDING)

TECHNICAL DATA

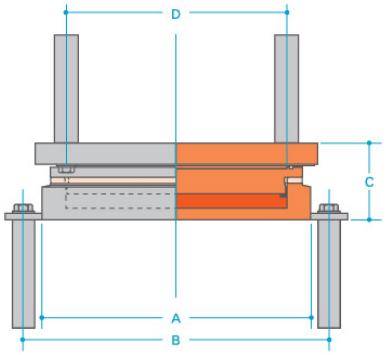

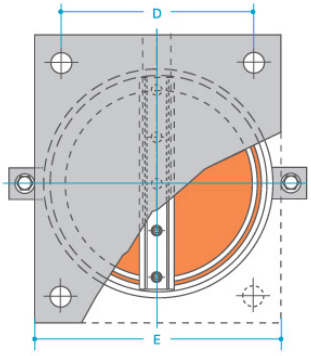

Capacity (Tons)	A (mm)	B (mm)	C (mm)	D (mm)
50	230	290	87	240
100	300	360	93	270
150	350	410	100	290
200	370	430	107	330
250	420	500	115	350
300	460	540	122	370
350	500	580	127	410
400	530	610	132	430
450	560	640	135	450
500	600	680	137	480
600	640	720	140	530
700	690	770	145	580
800	740	820	147	630
900	780	860	152	650
1000	820	900	156	680
1200	900	980	163	730
1400	980	1060	172	800
1600	1060	1140	182	950
1800	1140	1220	188	1010
2000	1220	1300	200	1060
2200	1260	1340	210	1110
2400	1300	1380	218	1160
2600	1340	1440	225	1210
2800	1400	1500	231	1260
3000	1460	1560	235	1320
3500	1520	1620	242	1380
4000	1620	1720	258	1440
4500	1720	1820	268	1500
5000	1820	1920	282	1560

Horizontal force = 15%
Rotation = .015 radians
Anchors = socket + bolts

Movement will affect length of slide plate
Sole & masonry plates can be added to design

TESTING CAPABILITIES

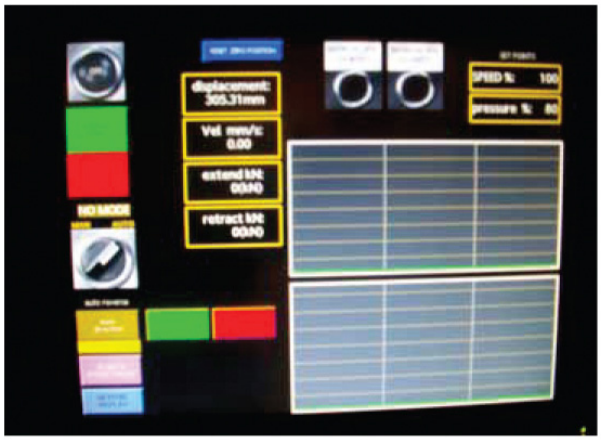

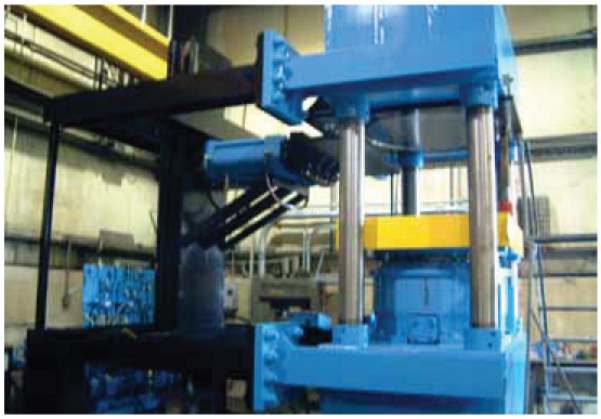

Largest structural bearing/dynamic STU testing facility in the USA.

Doshin's load testing capability is the largest structural bearing/dynamic STU testing facility in the USA. Statically, the testing frame has a vertical load capacity of 6 million pounds (28,000 kN). The hydraulic controls of the testing frame allow it to be dialed down for testing of small loads such as 100 kips. The horizontal capacity is 1.9 million pounds with a travel/stroke range of 15 inches (380 mm) with the same dial down capacity for light load testing. Doshin's auxillary STU testing hydraulic controls provide the same "in-triplet" mounted horizontal rams a dynamic capacity of 1.9 million pounds at 6.5-7.0 mm/second velocity in both tension and compression. The structural frame is rated above 2 million pounds. This is the largest dynamic load testing capability within the USA except for Caltran's lab in San Diego. The Doshin facility is the only lab available on short notice for full dynamic testing with outside independent supervision.

Doshin has tested bearings up to 7 million pounds vertical load for State DOTs and has tested STUs for projects including for the government of South Korea.

STANDARD FIXINGS

INSTALLATION

A pedestal is formed which will support the pot bearing. Pipes are cast into the pedestal and form the anchor recesses, and permit placing of the reinforcing steel. The bearing is placed in the proper position, and the surrounding area is grouted with non-shrink grout. Plastic pipes permit the release of air.

This type of anchorage is slightly more expensive than stud anchors attached to the masonry plate, but the ease of installation by avoiding the interference problem associated with the stud anchors and reinforcing steel makes this type of anchorage cost effective. (See Figure 1)

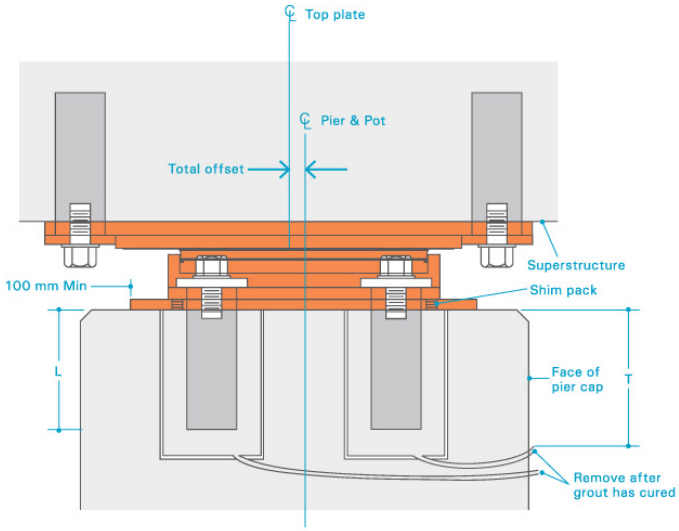

Bolt	Socket		Pipe	
	Ø D	L	Ø ID	T
19	51	229	152	305
25	76	305	152	356
38	102	381	152	432
50	152	457	229	508
64	152	457	229	508

Figure 1 – Detail of Bearing anchorages and installation components

DISC BEARINGS

More Durable Alternative To The Standard Pot Bearing

The Doshin 'Disc Bearing' solution offers a lower profile (vertical height) than typical Pot Bearings. Even with the lower profile, Disc Bearings can provide the same load capacity and movement as Pot Bearings provide. Another advantage that Disc Bearings has over Pot Bearings, is not relying on rubber seals to retain the elastomer, therefore offering the potential for greater service life. In the United States and all over the world, Bridge Builders are using Disc Bearings more and more.

The sun is always shining on a Doshin Disc Bearing Project. Doshin disc bearings can be found in the States of Arizona, Florida, Illinois, Louisiana, New York, Ohio, Oregon, and Rhode Island. They can also be found in countries such as Qatar, Bangkok and India. Doshin manufactures Disc Bearings in their facilities in the USA, Canada, Taiwan, Thailand, China and India. There is no project too big or too small for Doshin to handle.

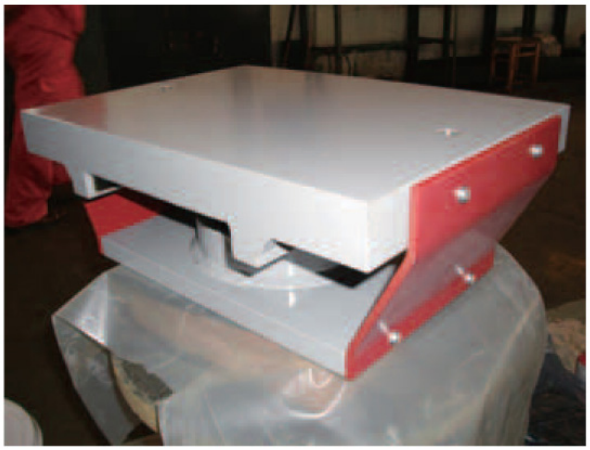

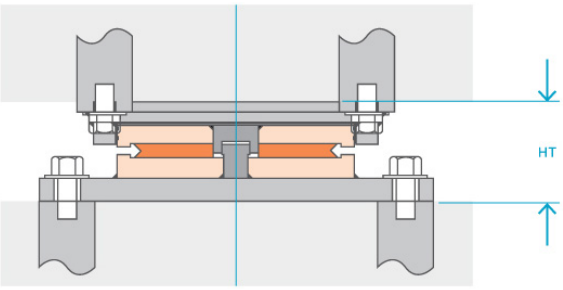

Figure 2 – Section Thru Disc Bearing (looking up station)

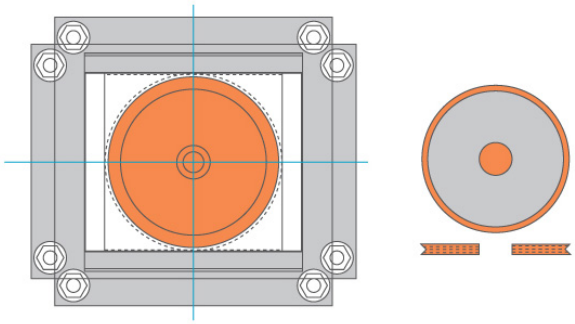

Figure 3 – Detail of Polyurethane Disc

Physical Property Requirements for Disc Bearing Elastomer

Physical Properties	ASTM Test Method	Requirements (Min)
Hardness, Shore D	D-2240	62 ±2
Tensile strength, min psi	D-412	5000 (34.5) (min mPa)
Ultimate elongation, min %	D-412	220
100% modulus, min psi	D-412	2000 (13.8) (min mPa)
200% modulus, min psi	D-412	3700 (25.5) (min mPa)
Aged physicals after 70 hours		
@ 100°C (212°F)	D-573	–
Hardness change, max	–	±2
Tensile strength change, max %	–	+15, -0
Elongation change, max %		+20, -0
Tear Strength, min lb/in	D-624	110
Compression set, 22 hours @ 70°C (158°F), Method B, % max	D-395	40
Low temperature brittleness @ -40°C (-40°F), Procedure B	D-746	No failure

SHPHERICAL BEARINGS

Doshin Spherical Bearings For High Vertical, Horizontal Loads

Spherical Bearings are designed for very high vertical, horizontal and lateral loads and where large rotational structural displacements need to be accommodated. The bearings are grouped into three categories: fixed bearing (restriction of all movement in planar axis); guided bearing (restriction of movement in one direction in planar axis); multi-directional bearing (allows movement in all planes and axes). All three types can be designed to accommodate uplift loads, often required during construction or during the life of the structure. The bearings are designed to be quickly and easily replaced because of the structural fastening and attachment strategy Doshin deploys. Structural rotation is accommodated by a system of convex and concave plates which are, in turn, mounted onto a flat sliding surface which allows horizontal displacements whilst the curved bearings rotate about their center of radius. (See Figure 4 and 5)

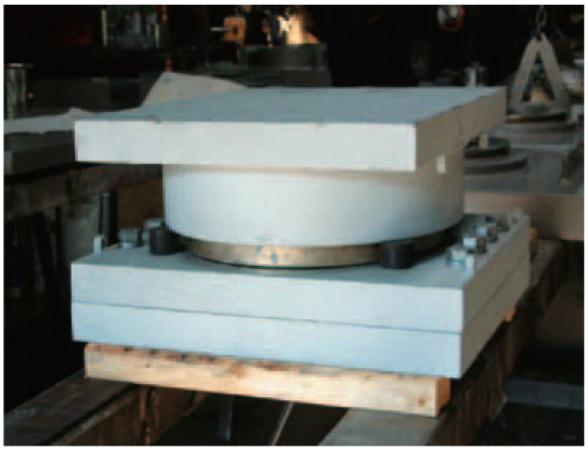

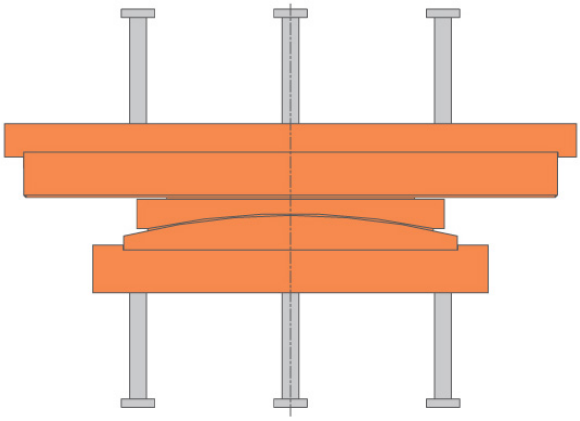

Figure 4 – Section Thru Spherical Bearing (looking up station)

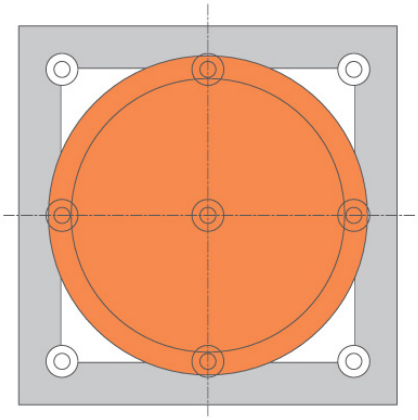

Figure 5 – Detail of Sliding Plate

NOTABLE PROJECTS

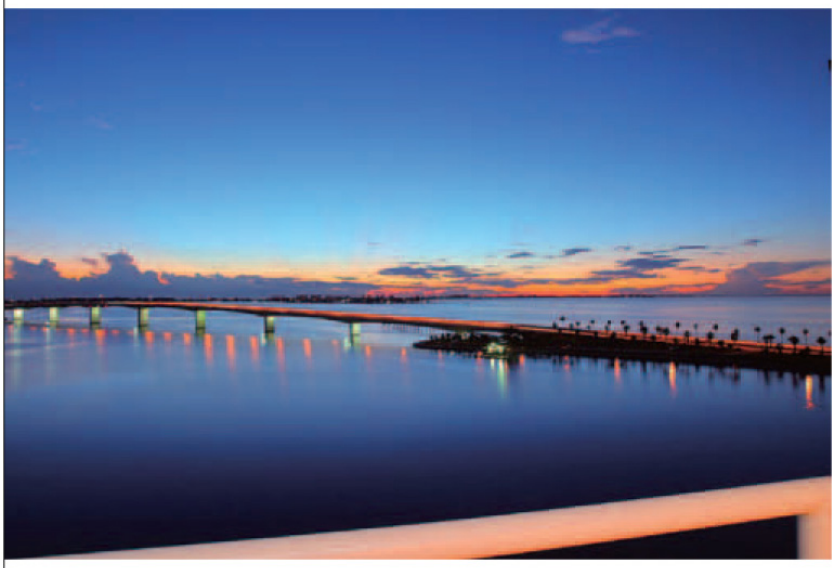

1 Ringling Bridge, Florida, USA

2 Avenida de las Americas, Ecuador

3 New Doha Airport Hanger, Doha, Qatar

4 Screwtail Bridge, Arizona, USA

5 Oakland Bay Bridge, California, USA

1	2
5	3
	4

DOSHIN®
RUBBER ENGINEERING

DOSHIN RUBBER PRODUCTS (M) SDN. BHD. (114386-H)
Lot PT 34252, Jalan Sekolah, Rantau Panjang, 42100 Klang
Selangor Darul Ehsan, Malaysia.
Tel : 603-3290 5619 / 3290 5621 , Fax : 603-3290 5642
Email : doshin@kossan.com.my
www.doshinrubber.com

GPS Coordinates : N 3° 4' 11.9" , E 101° 24' 25.4"

STANDARDS MALAYSIA
ACCREDITED LABORATORY
MS ISO/IEC 17025
TESTING
SAMM NO. 372

Certified System
Quality
ISO 9001
Cert. No: QEC 23010
SAI GLOBAL

A subsidiary of
KOSSAN
STRETCHING LIMITS • SINCE 1979

VSL stay cable systems

DESIGNED BY VSL

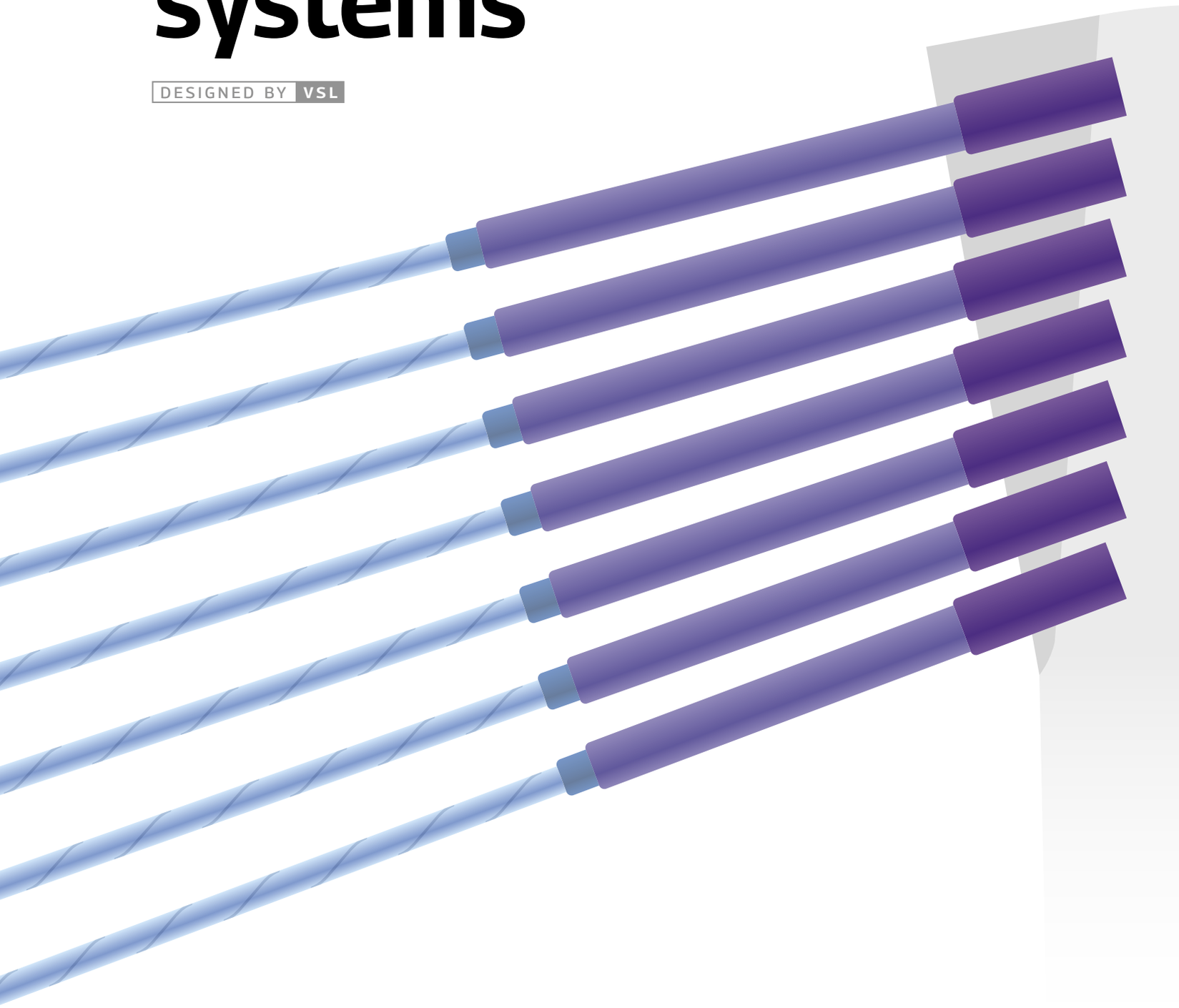

A member of
Bouygues Construction

December 2018

TECHNICAL CATALOGUE

Editorial

Some of the early examples of cable-stayed bridges are in Germany, where there was a huge demand to rebuild crossings over the river Rhine after the 2nd World War. Since then, cable-stayed bridges have become extremely popular all over the world not only for bridging of big spans of more than 1000m, which has penetrated deeply into what was once known as the exclusive domain of suspension bridges, but also for smaller bridges with spans of less than 200m, where Extradosed bridges are often the chosen type.

One reason for the popularity of cable-stayed bridges is that the deck can be built by balanced cantilever method and deck construction can start immediately after a pylon has been fully or even only partially completed.

Another reason was the development in the eighties of strand-based cable systems, which have almost no limits to cable capacity and cable length, since such cables can be assembled on site strand by strand. VSL was instrumental in pushing the development of strand-based stay cables. VSL installed its strand-based stay cable system for the first time in 1978 on the Liebruti Bridge in Switzerland and in 1987 on a major cable-stayed bridge, the Sunshine Skyway Bridge in Florida, which has a main span of 366m.

The development of strand-based stay cable systems never stopped and is still ongoing. VSL established itself as a leader in this field. This is for example demonstrated by VSL SSI 2000 saddle, which is a third generation type saddle. By inventing a special geometry for the strands' individual voids, VSL managed to amplify the differential load transfer capacity between the saddle and the pylon when compared with saddles using circular strand channels. The latest VSL development is VSL LEDsPLAY®, which gives the owner of a cable-stayed bridge the opportunity to turn its bridge into a highly visible 3D screen for use as an attractive medium for the versatile display of unique light shows and informational messages.

This catalogue gives owners, consultants and contractors an overview of the VSL stay cable systems and their field of applications. Furthermore it provides practicing design engineers with the technical data needed when designing and detailing cable-suspended structures with strand-based systems.

VSL is always available to support the various stakeholders during conceptual and final design stage, during construction and throughout the service life cycle of the structure concerned. VSL's expertise is not limited to stay cables, but extends to many other construction systems, deck construction using state-of-the-art bridge deck erection equipment and bridge maintenance. Comprehensive knowledge and experience guarantee that collaboration with VSL always adds value to a project.

Dr sc. h.c. ETH Max Meyer,
VSL Group Technical Officer

Table of contents

A A REPUTATION FOR EXCELLENCE SINCE 1956

B VSL STAY CABLE SYSTEMS

C TECHNICAL DATA FOR THE VSL STAY CABLE SYSTEMS

D REFERENCES

A

A reputation for excellence since 1956

1 60 years of experience and innovation

2016
First application of the VSL Fire Protection System on the Transbay Bridge, USA.

2014
Introduction of the VSL SSI 2000e anchorages capable of coping with big angular cable deviations of very long span cable-stayed bridges.

2013
Construction of the world's highest cable-stayed bridge, Baluarte Bridge, Mexico (402.57m high)

2009
A full-scale VSL SSI 2000 saddle for a 55-strand cable is successfully tested in accordance with International Federation for Structural Concrete (fib)'s recommendations.

2002
First application of the SSI 2000 system on the Yangtze River Bridge, China.

1998
First application of the VSL Friction Damper on the Uddevalla Bridge, Sweden.

1994
Introduction of the VSL SSI 200 system (SSI meaning Single Strand Installation), whereby a cable is made up of greased PE coated strands in HDPE stay pipe.

1991
First use of single strand installation method on the Evripos Bridge, Greece.

1987
First application of the VSL stay cable system on a major bridge, the Sunshine Skyway Bridge, USA, with a main span of 366m and use of saddles.

1978
First use of the VSL stay cable system made of grouted strands in PE pipes on the Liebrueti Bridge, Switzerland.

1966
Introduction of the VSL multistrand post-tensioning system which can be stressed with centre hole jacks.

1956
First use of VSL wire post-tensioning system

Queensferry Crossing, Lothian and Fife, Scotland - 2017: VSL SSI 2000 stay cable system

2 VSL stay cable technology and key benefits

VSL stay cable technology

SSI 2000, the VSL standard system with the state-of-the-art **SSI 2000e anchorage** capable of accommodating larger cable deviations at the anchorage exit with its patented strand sealing assembly.
SSI 2000C, a compact stay cable system with reduced cable diameter and therefore reduced wind drag.

SSI 2000 Saddle, a patented design facilitating simplified pylon layouts resulting in enhanced bridge aesthetics and increased structural efficiency.

SSI 2000D, a stay cable protected against corrosion by dehumidification techniques – a patented solution offering monitorable corrosion protection, and the smallest cable diameters available in strand technology.

MSI 2000, a patented articulated heavy duty stay cable system particularly developed for the hangers of arch bridges and the stays of suspended roofs.

Stay pipe profiles to control vibration and mitigate risk of snow and ice accretion.
VSL Fire Protection system, a fully integrated fire protection addressing the most stringent fire cases.
VSL LEDsPLAY®, a complementary stay pipe design that turns the bridge into an iconic display.

A choice of two damping systems to control cable vibrations efficiently, adapted to the characteristics of the structure and making use of robust friction and high damping rubber technology to ensure a long working life and low maintenance costs.

Answering clients' needs

VSL is a recognized leader in the field of special construction systems, means and methods. Well-proven technical systems and sound in-house engineering are the basis of the group's acknowledged reputation for innovative designs and engineering solutions to answer its clients' high expectations and demands.

DESIGNERS, OWNERS AND AUTHORITIES' REQUIREMENTS:

- Increased long-term performance of stay cables, tensile members and anchorages
- Leak-tightness of the anchorage assembly
- Easy inspection and maintenance
- The capability to replace cables with minimal interruption to bridge traffic
- Minimal wind drag for long spans
- Outstanding static and fatigue behaviour, validated by performance testing
- Highly modular and versatile cable system addressing various applications from tie downs to long span system combined with different anchoring arrangement including saddle and clevises.
- Incorporation of damping systems at the time of installation or as parts of dynamic retrofitting
- Improved aesthetics by using compact anchorages, saddles and coloured cables
- Enhanced protection against external threats and environmental effects (fire, ice, mechanical damages).

MAIN CONTRACTORS' REQUIREMENTS:

- Simple interfaces between deck erection and stay cable installation with a reduced number of activities on the critical path
- Lightweight installation equipment minimising crane time required

VSL prides itself on always responding to its clients' needs and offering the most suitable stay cable system for each project. The systems, which have been installed on well over 270 cable-stayed bridges worldwide and applied in numerous building structures, provide flexibility for a multitude of applications and outstanding performance.

Key Benefits

The VSL stay cable systems are a product of 40 year of development, regular testing to verify full compliance with international guidelines and numerous applications on bridges all over the world.

- The VSL stay cable systems are fully qualified through regular testing according to stringent international recommendations such as:
  - "Recommendations for stay cable design, testing and installation", Post-Tensioning Institute, (refer herein as PTI).
  - fib Bulletin 30, Recommendations: "Acceptance of stay cable systems using prestressing steels", (refer herein as fib).
- The main tensile elements of the VSL stay cable systems are widely available 7-wire strands of 0.6" diameter in compliance with EN 10138 or ASTM A416, greased or waxed and PE coated as specified by VSL.
- The VSL stay cable systems can be engineered for a design life of exceeding 100 years in the most aggressive environments.
- Individual encapsulation of each strand from 'wedge to wedge' provides maximum protection of the stay cable system, gives excellent fatigue performance, ensures high durability and minimizes maintenance costs.
- Very compact anchorages allow easy installation even in confined locations inside box girders or pylons using only light equipment.
- The VSL stay cable systems are generally installed strand by strand and can be inspected and replaced if ever necessary in the same manner.

Mersey Gateway Bridge, United Kingdom - 2017: VSL SSI 2000 stay cable system

3 Complying with stringent recommendations from international standards

The VSL stay cable systems' wedge anchorages and their tensile members as well as their protective systems exceed the most rigorous requirements for durability, tensile capacity and fatigue performance. Their strand-by-strand installation technology ensures maximum flexibility and replaceability of strands and anchorage if ever required.

HIGH FATIGUE PERFORMANCE
The anchorage assembly is designed to control the deviation of individual strands and to filter cable vibrations outside the wedge anchorage zone. Its outstanding fatigue performance is demonstrated through continuous and regular fatigue tests as specified in the latest recommendations by PTI and fib with imposed angular deviation of the anchorage from the cable axis.

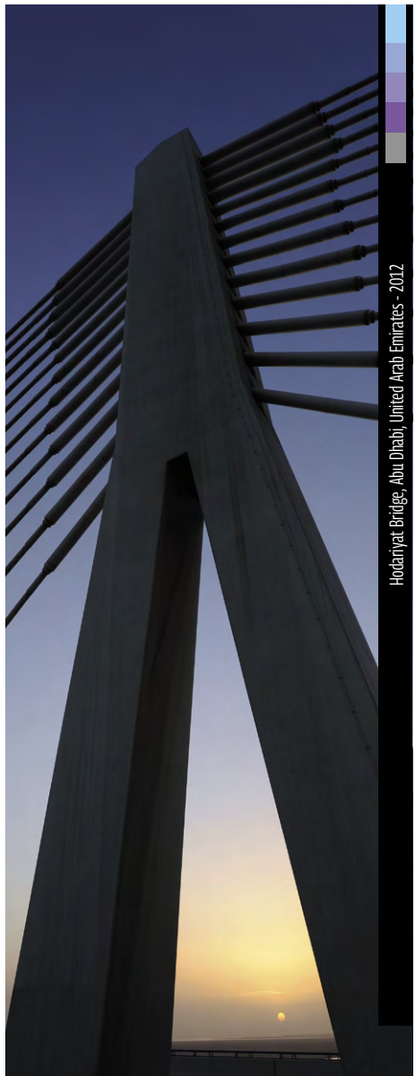
Hodariyat Bridge, Abu Dhabi, United Arab Emirates - 2012

DURABILITY AND MULTI-BARRIER PROTECTION
VSL stay cable systems fully comply with and if requested can be engineered to exceed the durability requirements provided in the relevant recommendations from PTI and fib.

The unique feature of individual encapsulation of each strand within the anchorage assembly eliminates the risk of corrosion migration between strands.

The multi-barrier protection system against corrosion and mechanical impacts is achieved in the free length by individually sheathed, greased or waxed strands with optional galvanization within the protective outer stay pipe.

The multi-barrier protection is maintained in the anchorage assembly and VSL's 3rd generation saddles by a flexible gel filler injection. Extensive fatigue testing has been carried out in accordance with fib requirements to demonstrate that the VSL saddles achieve the same performance as the VSL anchorages.

Queensferry Crossing, Lothian and Fife, Scotland - 2017

4 Providing state-of-the-art stay cable systems

R&D: The key to quality and durability

Engineers from VSL's Technical Center

Continuous R&D is at the heart of **the VSL Stay Cable Systems.** Development of the SSI 2000 anchorage system and the single strand installation method took place in the 1990s and a more recent focus has been on the development of the 3rd generation saddle system that complies with the toughest requirements in terms of durability and fatigue performance. The result of this development is the patented **SSI 2000 Saddle**, which guides each strand individually through the saddle in an individual void created inside ultra-high performance mortar. The V-shaped form of the void significantly increases the friction between the mortar and the strand and therefore ensures transfer of unbalanced loads in strands from both sides of a pylon. The SSI 2000 Saddle was the first saddle system to pass a full scale fatigue and tensile test in accordance with the fib recommendations for a 55-strand cable.

Another focus of VSL R&D has been on the control of vibrations of stay cables. Today, VSL can offer several different solutions to its clients. The **VSL Friction Damper** was developed in collaboration with distinguished specialists in the field of cable vibration for use on Uddevalla Bridge in Sweden in 1998. This damper system provides very high damping ratio through energy dissipation by friction when the cable and the supporting structure are moving relative to each other.

VSL has carried out further development of the installation methods used for stay cables. The **VSL SSI 2000C** uses special tools and installation methods to permit installation of stay cables in compact stay pipes, which significantly reduce wind loads on the cables.

The **VSL SSI 2000D** stay cable system uses galvanized but uncoated strands which are protected with dry air providing a controlled environment which allows permanent monitoring of the corrosion protection system. The significant reduction of the cable's cross sections by using unsheathed strands makes SSI 2000D the world's most compact stay cable system.

With a growing recognition of the risk of fire and its potentially catastrophic effects on cable-stayed bridges, the VSL R&D team developed the patented **VSL Fire Protection System** to provide a lightweight and flexible solution for the protection of the stay cables. It has been tested and designed to fully integrate with the VSL stay cable system.

An emphasis has also been given on development of the **VSL alternative stay pipe profile**. Through collaboration with renowned experts in the field, VSL R&D has achieved and patented stay pipe profiles that can minimise the increase in drag coefficient, increase stability against rain-wind induced vibration and provide an efficient measure for controlled removal of ice and snow on stay pipes.

VSL's latest development is the **VSL MSI 2000** articulated stay cable system, a state-of-the-art system, fully complying with the latest international standards for road or railway bridges. The system is built up of individual parallel strands, which are encapsulated in a continuous pipe system and are anchored individually by wedges as in the well proven SSI 2000 anchorage. VSL MSI 2000 stays can have clevis type anchorages at one or both ends.

Training: The basis for strong performance

Stay cable course at the VSL Academy in Bangkok

VSL ACADEMY – STAY CABLE CERTIFICATION COURSE

Supplying stay cable components at specified quality is not enough to ensure that they comply with requirements. It is also important that the site work is carried out strictly in line with VSL's defined procedures and tools. Quality site work is only possible with a site crew, who has been properly trained in the installation of the VSL stay cable systems.

In 2008, VSL launched the VSL Academy. The aim of the VSL Academy is to strengthen the company culture and to develop knowledge-sharing by formalising and standardising the training of VSL staff in the various VSL Systems such as VSL Post-Tensioning, VSL Stay Cables and VSL Heavy Lifting.

The VSL Academy provides a unique facility and resource within VSL, with hands-on vocational training for foremen, supervisors and site engineers. The stay-cable certification course covers the basic elements of the VSL stay cable system. It provides consistent training for all the key personnel carrying out stay-cable works. It ensures that in-depth knowledge about all aspects of the site work is passed from trainer to trainee and that VSL stay cable systems are installed to the same quality wherever the project is located.

ON-SITE TRAINING

Senior staff members are in charge of teaching VSL's techniques to the workforce on site. A well-trained and certified staff is VSL's most valuable asset in providing the best service to clients.

VSL ACADEMY

5 Durable design backed up by thorough testing

Durability and fatigue resistance are of utmost importance for stay cables, together with accessibility of components and monitoring of the structure.

DESIGNED TO LAST

VSL stay cables can be designed to comply with a design life of over 100 years in the most aggressive environments, as defined by the C4 and C5 categories of the ISO 12944 standard. All elements are either durable for guaranteed design life or fully replaceable without impact to the structure functionality. All the materials used have been carefully selected and all components have been detailed to meet the highest durability criteria. The performance exceeds the stringent durability requirements provided in the relevant recommendations from PTI and fib.

All non-accessible components can be supplied with a factory-applied protection system ensuring over 100 year design life. The accessible and replaceable elements are designed for a 25 year maintenance interval. In case of C5 exposure, VSL specially developed external protection caps to ensure the highest durability of anchorages. The main tensile element of the cable, consisting of VSL specified strands, is designed with a multi-layer protection system to match the performance of the anchorages. VSL provides a detailed maintenance schedule for each project and can assist clients in the implementation.

With a focus on durability throughout all phases, VSL has developed specialist methods and procedures to ensure that the required installation quality is achieved and that any damage that might occur to the components during transportation, handling or installation is detected and rectified prior to project delivery. The modular nature of the system allows for simple replacement of any damaged parts without critical delay to the installation schedule.

To achieve the complete benefits above from VSL stay cable technology, it is of utmost importance that the installation is carried out by specially trained and experienced VSL staff. In order to provide the full guarantee of the installed stay cable systems as normally demanded by the clients, VSL has to be responsible for supply, transportation and installation.

Accessibility orreplaceability of the components	Durability of the corrosion protection system	Design life of the initially applied corrosion protection system	Period between subsequent maintenance operations
Replaceable	25 years	25 years	25 years
Not replaceable Easy access	Over 100 years	25 years	25 years
Not replaceable No access	Over 100 years	Over 100 years	No maintenance

FATIGUE TESTING

The fatigue performance of the VSL stay cable system has been demonstrated in numerous fatigue tests in accordance with PTI and fib recommendations:

- For stay cables, stress range of 200MPa at 45% Guaranteed Ultimate Tensile Strength (GUTS) upper stress over two million cycles and a 10mrad deviation at the anchorages.
- For extradosed cables, stress range of 140MPa at 60% GUTS upper stress over two million cycles.

Fatigue testing over 2 million cycles

ANCHORAGE LEAK-TIGHTNESS TEST

The anchorage is the most exposed part of a modern stay cable in terms of durability. In order to achieve a continuously protected transition from the free length of the cable into the anchorage zone, it is important to prevent water ingress through the component interfaces, particularly at the lower deck anchorage.

VSL has equipped its anchorages with a redundant patented multi-layer sealing system, which has passed the leak-tightness tests as defined by PTI and fib.

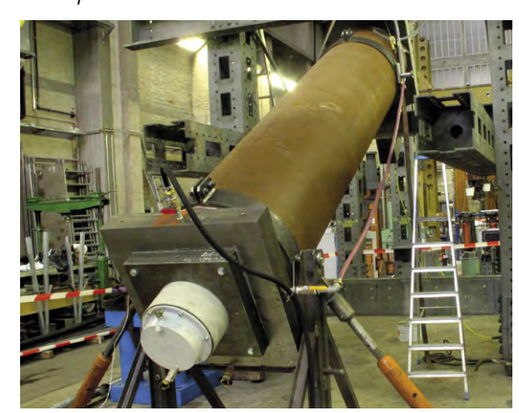

Leak-tightness test of an anchorage subjected to mechanical and environmental actions

ACCELERATED AGEING TESTS FOR COLOURED STAY PIPES

Correct material selection and manufacturing control is important to avoid variations in the characteristics of the HDPE components used for the outer protection layers of the free length. Ageing effects, UV radiation and/or pollution can deteriorate the condition of the stay pipe over time.

The evolution of the mechanical and colorimetric properties has been verified by performing accelerated ageing tests.

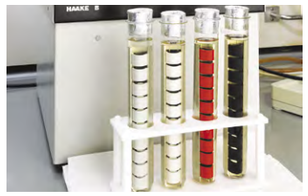

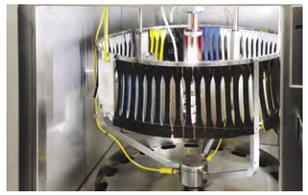

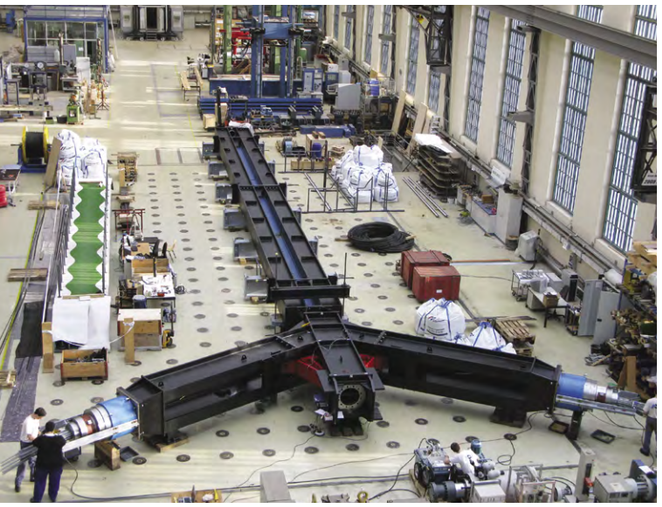

EQUIVALENT DURABILITY USING AN INJECTED SADDLE WITH REPLACEABLE STRANDS

The SSI 2000 Saddle is the first friction saddle in the market with injected but replaceable strands. As in the anchorages, the PE sheathing is removed from the strand at the saddle location. Each strand is individually guided through the saddle and injected with a bonded, flexible gel filler, effectively preventing any oxygen or corrosive agents from reaching the strand while permitting transfer of differential stay cable forces to the pylon by friction.

VSL has carried out extensive fatigue and tensile testing with the SSI 2000 Saddle in accordance with fib recommendations, including a full scale test using a 6-55 unit. The tests have demonstrated that the saddle fulfils the same fatigue and static criteria as the standard anchorages for application on cable-stayed and extradosed bridges and that no fretting corrosion occurs.

ENHANCED DURABILITY AND USER COMFORT BY SYSTEMATICALLY CONTROLLING VIBRATION

VSL offers a modular approach to mitigate the risk of cable vibration: stay pipe profiles and dampers.

VSL offers the stay pipes with helical rib profiles to minimise the risk of rain-wind induced vibrations. VSL also offers the special rib profiles to mitigate the risk of snow and ice accretion and for even higher rain-wind stability.

To effectively control cable vibrations, two types of dampers are available: VSL Friction damper and VSL Rubber damper. Both dampers can be either installed during construction or retrofitted on existing structures. The dampers are designed for maximum durability by minimising the number of moveable parts and selecting the most durable materials.

Wind tunnel testing

Wind tunnel tests have been conducted to optimize and validate the shape and dimensions of the helical ribs and special rib profiles. The tests have verified the effectiveness of different rib patterns in controlling cable vibration. In addition, it has been demonstrated that the special rib profiles not only enhance the mitigation of rain-wind induced vibration but also help in the controlled removal of snow and ice accreted on stay pipes.

Damper testing

The behavior of VSL Dampers and the correlation of calculated and actual cable oscillations have been verified in numerous full scale tests on site. The effectiveness of the dampers can be assessed by measuring the cable oscillations over time and comparing the results with and without the damper.

B

VSL stay cable systems

1 VSL Stay Cable Systems

This chapter gives a detailed description of all VSL stay cable systems.

P. 20-21
P. 22-23
P. 24-25
P. 26-27

SSI 2000 – The VSL standard stay cable system

The VSL SSI 2000 is VSL's well proven and widely used state-of-the-art stay cable system providing with its SSI 2000e anchorages even greater flexibility for the design of long-span cable-stayed structures.

The evolution of higher strength materials, the development of advanced dynamic and aerodynamic simulation capabilities and an improved understanding of the behaviour of flexible structures, push the achievable span limits of modern cable-stayed bridges further and further reaching span lengths in excess of 1km.

Such increased span lengths result in higher slenderness ratios and hence typically in more flexible behaviour of bridge decks which in turn increases the angular deviation between the stay cables and the supported deck structure. Furthermore, such slender structures often require the use of cable dampers. In order to maximize the effect of these dampers, preferably mounted at the exit of the guide pipe, the cable is required to move transversally relative to the guide pipe. The use of fixed deviator devices at the exit of the guide pipes is hence often not possible.

In recognition of such increasing demands, VSL has further developed a new generation of its well known SSI 2000 anchorage system. **The SSI 2000e anchorage provides the same strand-by-strand functionalities as well as fatigue and water tightness performance as the previous generation of the SSI 2000 anchorage, but is capable of withstanding even greater angular deviations at the anchorage exit.**

VSL has verified by regular testing that the SSI 2000e anchorages can cope with angular deviation under service condition of more than 50mrad, which is well above the value specified by PTI and fib.

Main features of the VSL SSI 2000 stay cable system are:

- units 6-12 to 6-187 [1)]
- high fatigue performance complying with PTI and fib requirements
- durability and multi-barrier protection
- strand-by-strand installation with lightweight equipment and minimum impact on other erection activities
- cable replacement with minimum traffic disruption
- cable movement control by VSL dampers
- fully prefabricated anchorage, providing corrosion protection even during construction.

In addition, VSL also offers **the SSI 2000C, the VSL compact stay cable system for long cables**. Reduced stay pipe diameters result in lower wind drag on the stay cable and hence in a reduction of wind loads on the structure. This can be an important parameter in the design of long-span bridges.

LOCATION OF ANCHORAGES

The VSL SSI 2000 stay cable system features stressing anchorages (SSI 2000e DR) and fixed anchorages (SSI 2000e DS). The stressing anchorage can be placed either at pylon level or at deck level. The choice of the location of the anchorages may be made based on considerations with regard to access for stressing and handling of the stressing equipment. If conditions are similar, placing the stressing anchorage at deck is preferred.

INSTALLATION METHOD

The VSL SSI 2000 stay cable system is installed by using the strand-by-strand installation method, using lightweight equipment. The use of heavy erection cranes is not required. General steps are:

- installation of guide pipes and bearing plates (prior to concreting)
- installation of anchorages
- erection of stay pipe
- strand-by-strand installation and stressing
- force adjustment (if required)
- final protection of the anchorages.

VSL has developed a combination of measuring techniques with single strand jack and vibration measurements to provide accurate values of the tension forces of stay cables during construction to the engineering team.

-> refer to Pages 38-39

Components on free length

On the free length, the VSL SSI 2000 stay cable system features PE sheathed, greased or waxed strands with optional galvanization, protected by an outer HDPE pipe. This multi-barrier protection system guarantees durability of the stay cable. Arrangements on free length can be standard or compact.

Standard arrangement

Compact arrangement

The VSL SSI 2000e anchorage

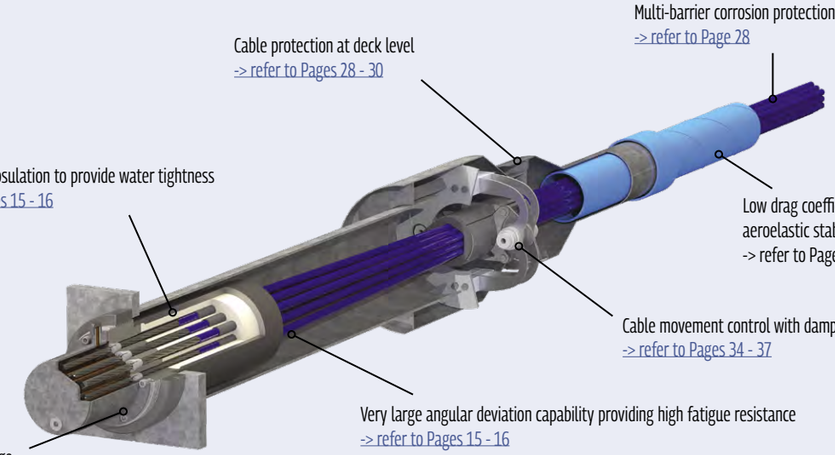

Stressing anchorage at deck (SSI 2000e DR) [2)]

Clearance requirements for operations

- installation of anchorage
- stressing of cable
- final force adjustment
- final protection

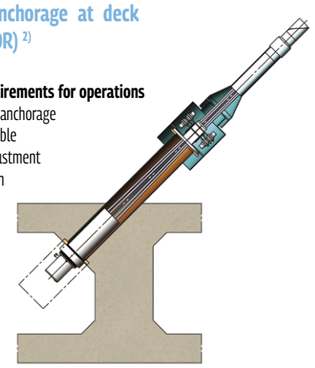

Anchorage configurations:

- Anchorage located within box section (shown above)
- Anchorage located below deck level (below left)
- Anchorage located above deck level with steel bracket (below right)

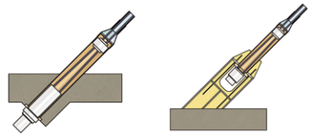

Notes:
1) Bigger units available on request.
2) Alternate arrangement of stressing and fixed anchorages is possible.

Fixed anchorage at pylon (SSI 2000e DS) [2)]

Safe access

- VSL requires safe access to working areas for all operations

Clearance requirements for operations

- installation of anchorage
- wedge power seating
- final protection

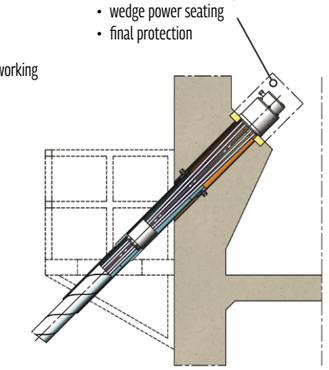

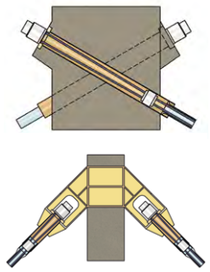

Anchorage configurations:

- Anchorages located within pylon (shown above)
- Anchorages located outside of pylon with stay cables crossing and with steel bracket connected by link (shown left)

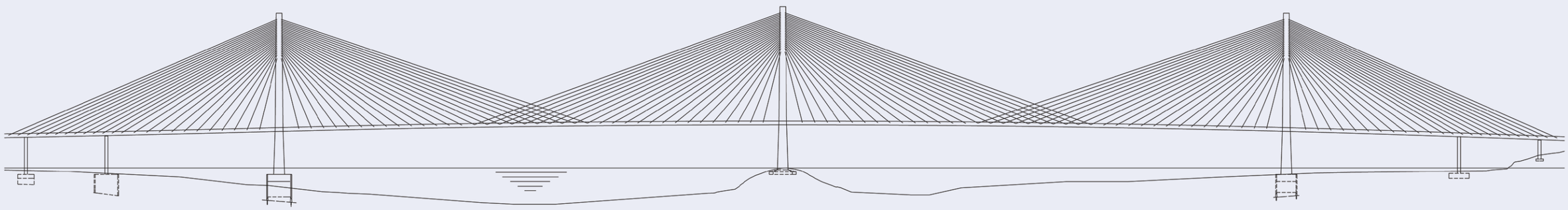

SSI 2000D – The VSL dehumidified stay cable system

The world's most compact strand stay cable with monitorable corrosion protection

With the SSI 2000D system, VSL introduces a proven dehumidification technology to stay cables, defining a new standard for the industry. The permanent dehumidified system provides a controlled environment, which protects steel strands from corrosion and is easy to monitor and inspect.

The D system maintains the highest standard of durability while eliminating the need for individual sheathing of the strands and hence allowing a significant reduction in cable's cross section. It also maintains all the SSI 2000 benefits when it comes to installation, durability and replacement.

Main features of the VSL SSI 2000D system are:

- units **6-12** to **6-187** [1)]
- durability of unsheathed galvanized strands guaranteed by dry air
- world's most compact strand stay cable system
- monitorable corrosion protection.

The galvanized, unsheathed strands are placed inside an air-tight enclosure, where optional dampers can also be accommodated. A dehumidifier and filter unit, typically placed inside the pylon, provides a constant supply of treated dry air at the pylon anchorages, while maintaining a permanent positive pressure differential between the inside and the outside of the cable. This prevents any ingress of moisture or other corrosive agents from the outside. All structural elements of the stay cable are protected within the controlled environment where the humidity is maintained below the threshold that would trigger corrosion.

The applied pressure differential ensures that a leak in the system will only result in an increased air demand and will not jeopardize the protective mechanism. The monitoring system allows early detection of any leakage in the system encapsulation and thus permits repair before damage occurs.

DRY AIR – A RELIABLE AND PROVEN SOLUTION

The concept of dehumidification systems to protect steel bridge was introduced in the 1970s for steel deck, main cables of suspension bridges in 1990s and is today a well understood and highly reliable solution, applied to some of the most prestigious bridges around the world.

With the SSI 2000D system, VSL applies dehumidification technology to stay cables to offer a state-of-the-art corrosion protection solution. Use of the latest dehumidification equipment keeps operational and maintenance costs low.

REDUNDANCY AND EQUIVALENT CORROSION PROTECTION

The principle of multi-barrier protection remains unchanged even though the SSI 2000D does not make use of individually sheathed strands:

- The stay pipe provides in the case of the SSI 2000D system an airtight enclosure, protecting the tensile element against environmental effects.
- A protective environment of treated dry air around the strands prevents moisture and corrosive agents from reaching the strands.
- Continuous galvanization of the bare strand provides a final barrier against corrosion in case of scheduled temporary removal or incidental loss of the other barriers.

PERMANENT MONITORING OF THE CORROSION PROTECTION

The integrity of the corrosion protection system can be monitored permanently through continuous measurement of the corrosion critical parameters of temperature and humidity inside the cable together with the air pressure.

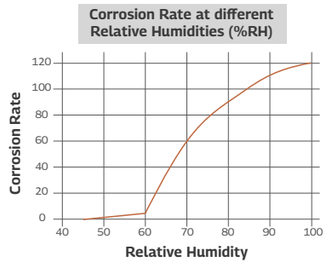

Corrosion rate of steel at different relative humidities [%RH]: Lower corrosion rate with decreasing relative humidity.

COMBINING CABLE AND DECK PROTECTION

Where the SSI 2000D is used with steel bridge decks or pylons with closed cross section, the dehumidification can protect both the stay cables and the inside of the structural steel elements by suitable sizing of the dehumidification units and the flow pattern of the air.

Notes:
1) Bigger units available on request.

The VSL SSI 2000D anchorage

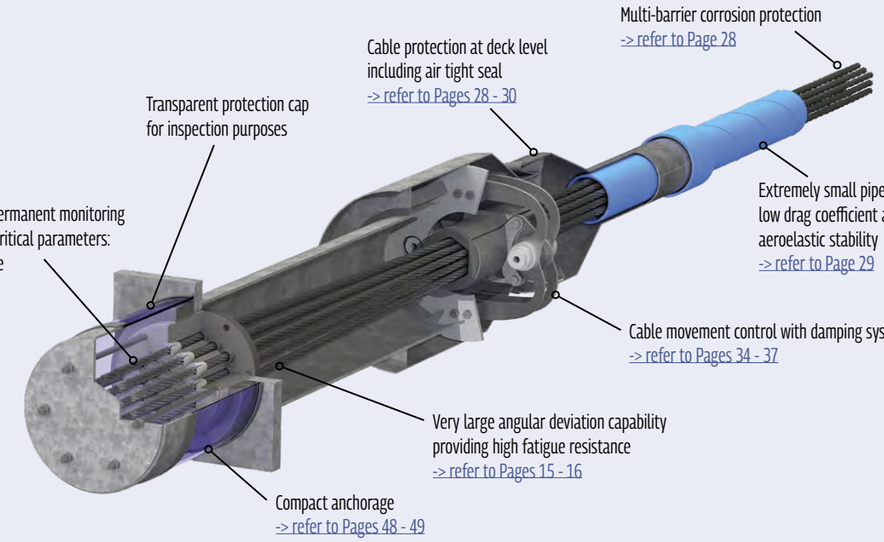

Components on free length

On the free length, the VSL SSI 2000D stay cable system features galvanized strands, protected by an outer HDPE pipe. Durability of strands is guaranteed by dry air. The SSI 2000D cable arrangement is super compact.

-> refer to Pages 28 - 33

Super compact arrangement

Installation method

The VSL SSI 2000D stay cable system is installed by using the strand-by-strand installation method similar to the VSL SSI 2000 system.

-> refer to Pages 38 - 39

Location of anchorages

The VSL SSI 2000D stay cable system features stressing anchorages (SSI 2000D DR) and fixed anchorages (SSI 2000D DS). The location of stressing anchorage can be at deck or at pylon.

-> for possible anchorage configurations refer to SSI 2000 system on pages 46 - 47

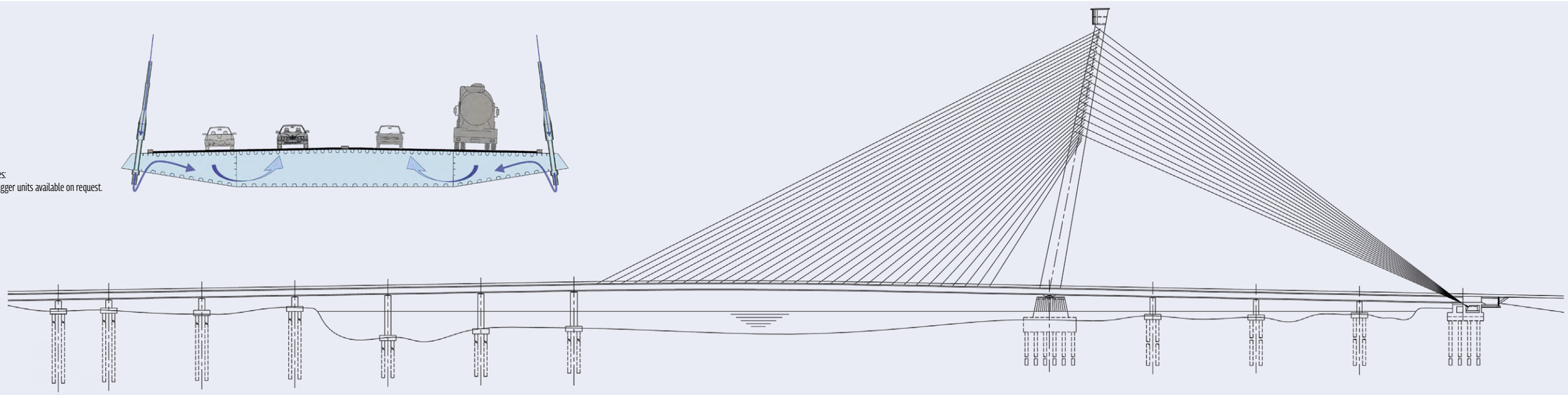

MSI 2000 – The VSL articulated stay cable system

The VSL MSI 2000 is a heavy duty stay cable system specifically developed for the hangers of arch bridges and the stays of suspended roofs, which have articulated connections at one or both ends, in compliance with fib and PTI requirements. The VSL MSI 2000 system is tested according to durability and fatigue performance requirements for application on road and railway cable-stayed bridges. The use of clevis anchorages provides an aesthetic solution to bridges and large span roof structures through their compactness and simple connection of the stays to steel structural components.

The VSL MSI 2000 makes use of the proprietary VSL strand and wedge based anchorage system, incorporated into an anchorage, which is linked to the structure through a flange / clevis assembly for maximum geometrical flexibility. The VSL MSI 2000 cable bundles are pre-fabricated together with the anchorages prior to installation. Pre-fabrication requires only light set-ups and can take place in the factory or directly on site.

Main features of the VSL MSI 2000 stay cable system are:

- units **6-7** to **6-109** [1)]
- articulated system with stay cable fixed by clevis on pylon and/or on deck
- accommodating construction tolerances of +/- 20 mrad in transverse direction of gusset plate
- proven fatigue performance according to fib and PTI
- possibility to prefabricate cables on site
- extremely slender cables meeting expectations of architects
- superior corrosion protection and fatigue performance making use of individually protected strands preventing migration of damage within an individual cable
- easy fine-tuning of the cable force during installation and any time during service
- very low maintenance by using the well proven SSI 2000 principles.

LOCATION OF ANCHORAGES

In case of using **double clevis**, the VSL MSI 2000 stay cable system features stressing anchorages (MSI 2000e DR) and fixed anchorages (MSI 2000e DS). Due to access requirements for stressing operation the stressing anchorage shall be placed at deck level.

In case of using **one clevis and a SSI 2000e DR stressing anchorage**, the clevis can be placed either at pylon (or arch) level or at deck level. Similar to the VSL SSI 2000 system, the choice of the location of the anchorages may be made based on access for handling of stressing equipment and exposure of anchorages.

Components on free length

Similar to SSI 2000, the free length of VSL MSI 2000 stay cable system features PE sheathed, greased or waxed strands with optional galvanization, protected by an outer HDPE pipe, a multi-barrier protection to guarantee the durability of stay cables. Arrangements on free length are compact, which lead to extremely slender stay cables.

Compact arrangement

Stressing anchorage at deck (MSI 2000e DR)

Clearance requirements for operations

- installation of cable
- stressing of cable
- final force adjustment
- final protection

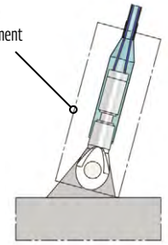

Anchorage configurations:

- Clevis anchorage (shown left)
- Anchorage located below deck level with SSI 2000e DR anchorage (below left)
- Anchorage located within box section with SSI 2000e DR anchorage (below right)

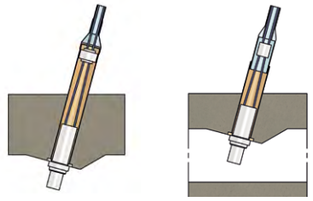

Notes:
1) Bigger units available on request.

VSL MSI 2000e DR stressing anchorage

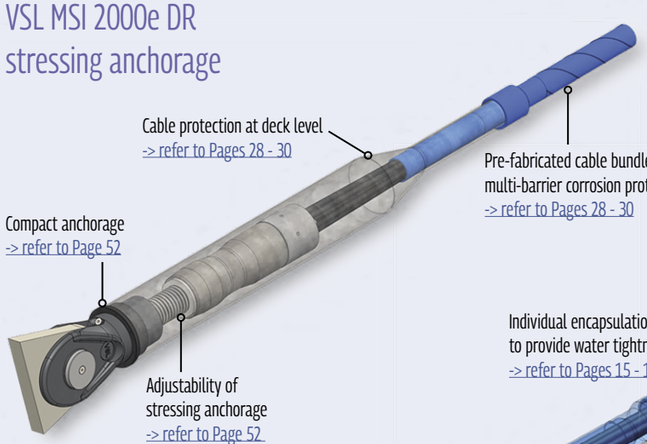

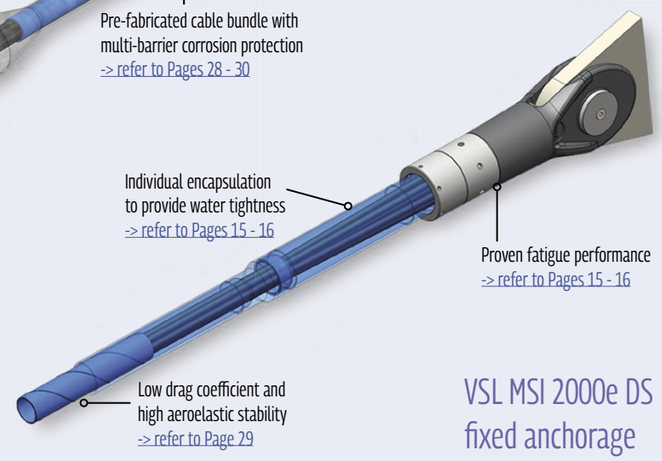

VSL MSI 2000e DS fixed anchorage

Fixed anchorage at arch/pylon (MSI 2000e DS)

Safe access
VSL requires safe access to working areas for all operations

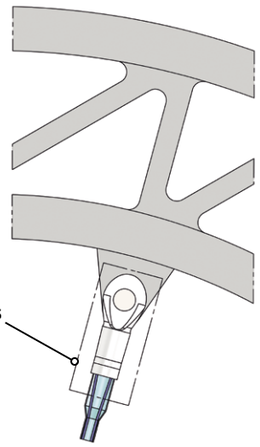

Clearance requirements for operations
Installation of cable

Installation methods

General steps of installation methods for the VSL MSI 2000 stay cable system with double clevis are:

- prefabrication of stay cable
- installation of stay cable
- stressing of stay cable by specific MSI stressing equipment
- final protection of anchorages.

For VSL MSI 2000 stay cables with one clevis and a SSI 2000e DR stressing anchorage, the installations steps are:

- partial prefabrication of stay cable
- installation of stay cable
- stressing of stay cable strand by strand
- final protection of the anchorages.

-> refer to Pages 38 - 39

Stressing of MSI 2000 stay cable system

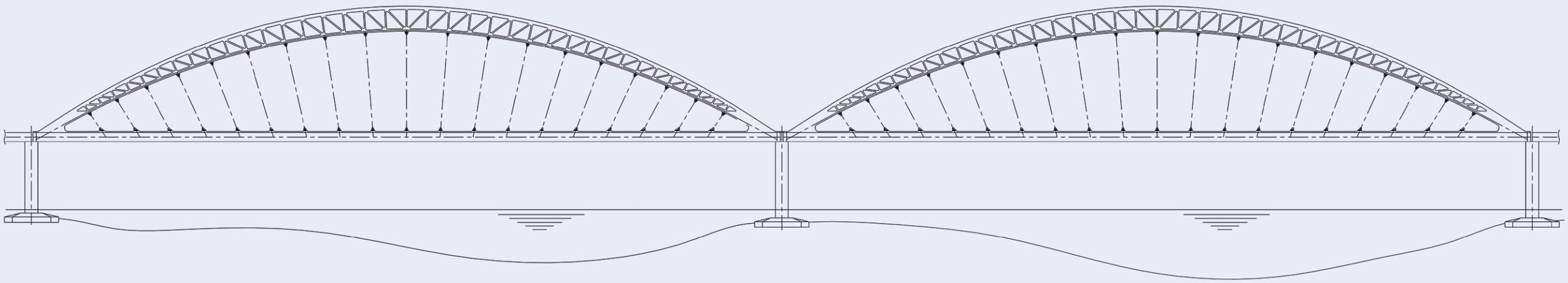

SSI 2000 Saddle – The VSL saddle system

The use of solid cross-section pylons simplifies detailing and construction and minimizes deck width in case of bridges with single plane of stays. With solid pylons, there are three options. If cables are anchored at the pylon, they are either overlapped across the pylon or fixed to steel brackets which are connected through the pylon by steel link members. The most efficient way however to introduce the stay cable force into the pylon is not by anchoring cables but to let them run through a saddle.

The deviation forces are not concentrated at the pylon's extremities but uniformly distributed over the depth of the pylon. Most importantly however, the balancing of horizontal components of the stay cable forces across the pylon does not subject the pylon to tension.

The benefits of saddles are widely accepted but their general use had been prevented in the past by the issues of reduced fatigue performance compared to an anchorage system, the risk of fretting corrosion and the inability to install and replace strand by strand.

VSL responded to these challenges with the SSI 2000 Saddle. Individual guiding and encapsulation of the strands allows strand-by-strand installation, inspection and replacement. Injecting the guide voids with a special, polymerised and bonded flexible gel filler prevents any ingress of oxygen, hence eliminating the risk of fretting corrosion.
The result is a saddle with fully replaceable strands that achieves the same fatigue performance as standard SSI 2000e anchorages.

Main features of the VSL SSI 2000 Saddle are:

- units **6-12** to **6-187** [1)]
- use of standard strands
- independently guided and replaceable strands
- V-shaped guide voids allow safe differential force transfer by higher friction
- proven fatigue performance
- seamless integration with the SSI system
- radius as small as 1.5m.

TRANSFER OF HIGH DIFFERENTIAL CABLE FORCES INTO THE PYLON
The SSI 2000 Saddle is a steel box filled with an ultra-high-performance-concrete (UHPC) matrix and featuring the patented V-shaped guide voids for each individual strand. This specific geometry improves the capability to transfer differential forces due to unbalanced loading between bridge spans by amplified friction, while avoiding any damage due to fretting under cyclic loading. The entire saddle is detailed such that the deviation occurs entirely in the strand-to-matrix interface with no intermediate layers like PE coating which could deteriorate over time.

Consistent friction coefficients in excess of 0.45 are attained in tests. Results have shown that during construction friction coefficients larger than 0.6 can be considered. The amplified friction coefficient combined with the energy dissipating characteristic of the soft filler injected in the V-shaped guide hole makes the VSL saddle suitable for seismic area.

INDEPENDENTLY GUIDED AND REPLACEABLE STRANDS
The VSL SSI 2000 Saddle allows single strand installation, inspection and replacement. Strands can be individually stressed and de-stressed. In the same way that larger anchorage units can have spare strand positions, the saddle can also incorporate additional guide voids to give the option for a future increase in cable capacity.

PROVEN FATIGUE PERFORMANCE
Extensive fatigue testing with the VSL SSI 2000 Saddle has been conducted in accordance with fib recommendations, including a full scale test using a 55-strand unit for application on cable-stayed bridges and extradosed bridges.

SEAMLESS INTEGRATION WITH THE SSI SYSTEM
The VSL 2000 Saddle uses the same strand as the standard SSI 2000 System, with no additional treatment required. The removal of the tightly extruded PE-coating on the deviated length inside the saddle is performed on site following the same procedures as for the anchoring zone at the deck.

CONTINUOUS MULTI-BARRIER CORROSION PROTECTION

- As with the other SSI components, multi-barrier protection has been incorporated. The PE-coating of the strands is removed over the deviated length of the saddle to achieve strand-to-matrix contact in a similar manner to the removal of coating in the wedge bite zone of the SSI 2000e anchorage.
- An outer casing consisting of a steel box and a UHPC matrix gives protection against ingress of water and corrosive agents. After stressing, the guide voids are injected with a special flexible gel filler, which gives a reliable seal against moisture and oxygen to protect the strands inside the saddle from corrosion and fretting fatigue.

CONTROLLED ANGULAR DEVIATIONS AT SADDLE EXIT
Stay cable anchorages and saddles can be subjected to significant angular deviations at their exits as a result of installation tolerances, vibrations and variations in cable forces. This could cause gradual deterioration of the protective layers of the strand or result in premature fatigue damage. The SSI 2000 Saddle avoids this by incorporating a well detailed exit where each strand is individually deviated with the same characteristics as in a standard anchorage, without introducing undesirable stress into the pylon surface.

Notes:
1) Bigger units available on request.

The VSL SSI 2000 saddle

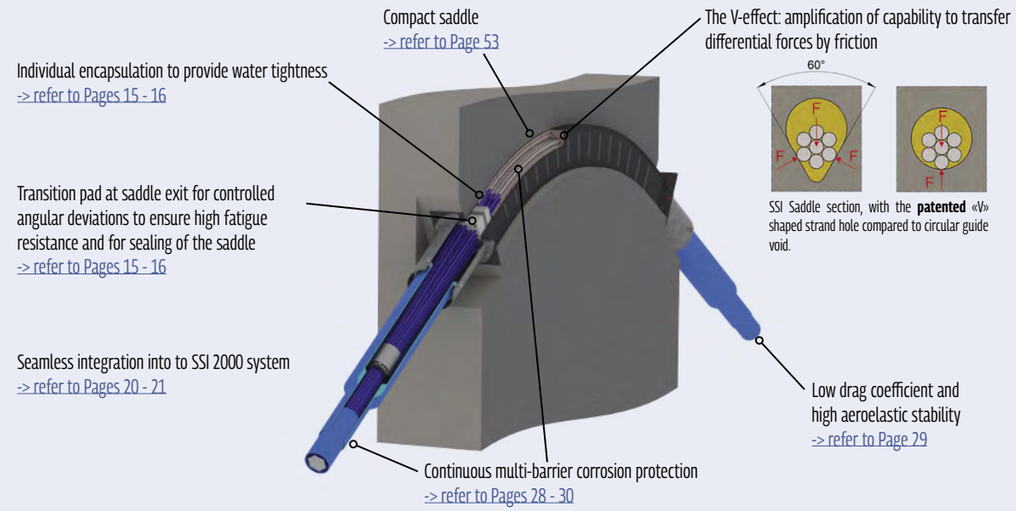

Components on free length

The stay cable of VSL SSI 2000 saddle features similar multi-barrier protection system to that of VSL SSI 2000: PE sheathed, greased or waxed strands with optional galvanization, protected by an outer HDPE pipe. Arrangements on free length with SSI 2000 saddle are standard. Compact arrangements may be used for long cables upon request.

Standard arrangement

Installation method

A VSL stay cable with SSI 2000 saddle is installed by using the strand-by-strand installation method, requiring only lightweight equipment. General steps are:

- installation of guide pipes, bearing plates and saddles (prior to concreting)
- Installation of anchorages
- erection of stay pipe
- strand-by-strand installation and stressing
- force adjustment (if required)
- final protection of the anchorages and saddle.

-> refer to Pages 38 - 39

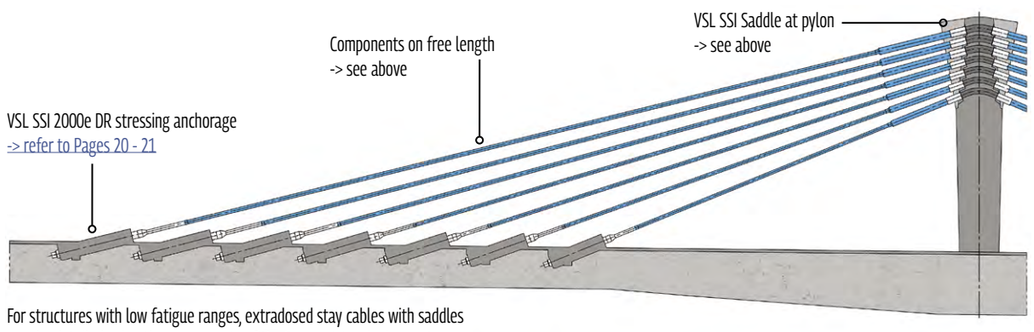

For structures with low fatigue ranges, extradosed stay cables with saddles may be detailed using the components of the VSL post-tensioning system.
-> refer to the VSL Strand Post-Tensioning Systems Brochure

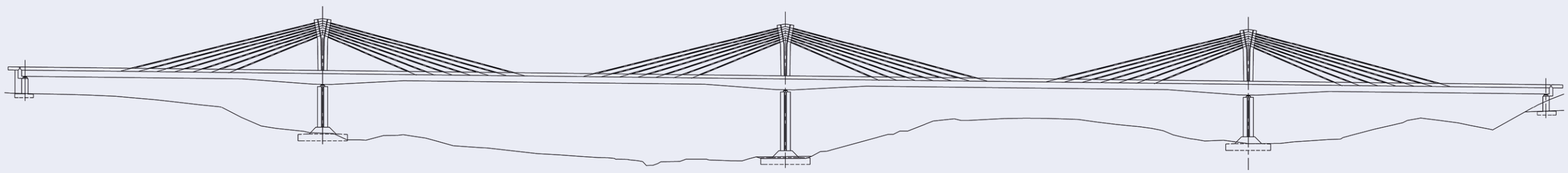

2 Free length

Concept of multi-barrier protection of VSL stays over free length

Relevant stay cable recommendations such as PTI and fib state that corrosion protection shall be provided using at least one external barrier and one internal barrier. They shall completely encase the main tensile elements for the full free length and the anchorage length. If corrosive elements breach the external barrier, the interior barrier will protect the main tension elements. For protection against environmental and mechanical effects, the strands of a stay are fully encased in a stay pipe over the free length.

A corrosion protection system which is composed of multiple barriers provides redundancy of corrosion protection. VSL recommends to use galvanized, waxed and PE sheathed strands to provide two fully redundant layers of strand protection. However, since VSL stay cable system allows replacement of the strands at any point of time during service life of the structure, the provision of zinc coated strands may be considered optional.

An equivalent multiple barrier corrosion protection can be provided with the SSI 2000D system, where uncoated galvanized strands are used and the stay pipe is kept dehumidified below 60% RH preventing the onset of corrosion.

The provisions define a two-stage process for qualification of corrosion protection systems:

- the first process is to establish the effectiveness of proposed barriers to corrosion and to qualify each proposed barrier for use in the overall system
- the second process is to test the corrosion protection system for the assembled cable. The validation is carried out based on a leak-tightness test of the anchorages and defines the acceptance standard for the cable system being supplied.

SSI 2000 MSI 2000 SSI 2000 Saddle	SSI 2000D Dehumidified system
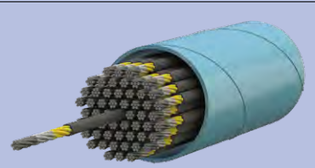	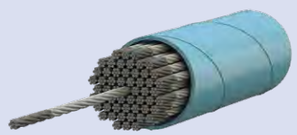
Mechanical & environmental barrier → Stay pipe	**Mechanical & environmental barrier** → Stay pipe
External barrier → PE coating	**External barrier** → Leak tight stay pipe
Interface → Grease or wax	**Interface** → Dry air
Internal barrier → Galvanized strand	**Internal barrier** → Galvanized strand
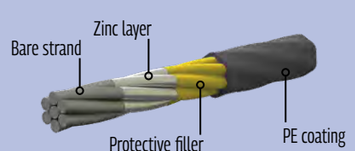	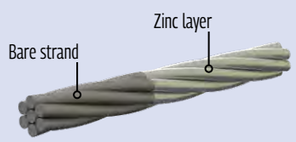

Protection of VSL stay cables at deck level

VSL stay cables feature a choice of different protection levels, ranging from minimum level (corrosion protection, leak tightness and UV protection) to enhanced level including fire and blast protection. The required level of protection shall be chosen by the owner based on exposition of the stay cables and the risk of accidental events such as fire and blast. The table below gives an overview and guideline for the choice of the appropriate protection system for different type of structures.

Protection level	P 0 Minimum protection	P 1 Standard protection	P 2 Standard + Fire	P 3 Standard + Fire + Blast
Elements	Deck connection	Anti-vandalism pipe + Deck connection	Anti-vandalism pipe + Deck connection + VSL fire protection	Anti-vandalism pipe + Deck connection + VSL fire protection + Armor pipe
Protection	→ Corrosion protection → UV resistance → Leak tightness (environmental climatic impact)	→ Corrosion protection → UV resistance → Leak tightness → Mechanical protection	→ Corrosion protection → UV resistance → Leak tightness → Mechanical protection → Fire protection	→ Corrosion protection → UV resistance → Leak tightness → Mechanical protection → Fire protection → Blast protection
Type of structure	Suspended roofs, where particular mechanical protection is not required	Cable-stayed bridges located in standard environments	Cable-stayed bridges located in special environments, e.g. when frequently used by dangerous goods vehicles or with high failure consequences	Cable-stayed bridges where blast protection is required for specific security needs.

Stay pipe design to control rain and wind induced vibration and minimize wind drag

VSL offers the stay pipes fitted with a continuous helical rib to effectively suppress rain and wind induced vibrations without increasing wind drag on the cable. Extensive wind tunnel testing at a speed of up to 70 m/s has been carried out for validation of wind drag coefficient. VSL provides a variety of stay pipe arrangements featuring the possibility to choose reduced stay pipe diameters, which result in lower wind drag on the stay cable and hence a reduction of wind loads on the structure.

The **compact arrangement** offers significantly reduced stay pipe diameters for the same permissible cable load. While this is the system of choice for exceptionally long cables, special tools are required for its installation.

SSI 2000D: the VSL dehumidified system for even lower wind drag. The system maintains all the proven features of the standard SSI 2000 stay cable system, while reducing further the cross section of the strand bundle by eliminating the sheathing of the strands. The result is the most compact parallel strand stay cable on the market – a system with fully replaceable individual strands and unrivalled low wind drag.

Stay pipe arrangements of VSL stay cable system

SSI 2000	SSI 2000D	MSI 2000	SSI 2000 Saddle
 Standard arrangement Compact arrangement	 Super compact arrangements	 Compact arrangement	 Standard arrangement Compact arrangement upon request

Comparison of equivalent drag diameter of different types of stays

Equivalent Drag Diameter = O.D. Stay Pipe x Drag Coefficient Cd
Cd = 0.6 for SSI 2000 has been determined in wind tunnel testing
Cd = 0.8 for PWS is based on typical project specification
* PWS = Parallel wire system

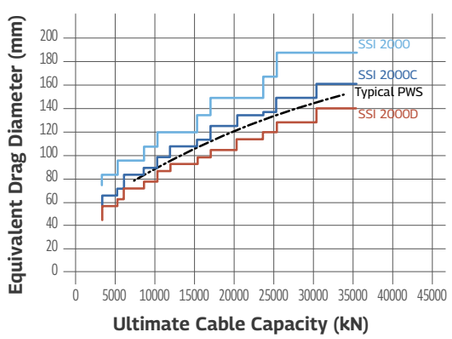

The VSL Fire Protection system – developed as a fully integrated component of the VSL stay cable system.

Fire represents one of the most severe threats to the integrity of public infrastructure. Until recently, the risk of fire and the potentially catastrophic effects on cable-stayed and cable-supported structures has been largely ignored, most likely due to lack of in-depth risk assessments. First considerations on fire resistance of stay cables were included in the 2012 revision of "Recommendations for stay cable design, testing and installation" by PTI.

Fuel tankers typically form the fire threat basis, whether it is an intentional or accidental event. Hydrocarbon fires resulting from tanker spills typically burn for up to 2 hours with temperatures of 1100ºC and flame heights between 8-13m. Other risks include ship fires under bridge decks or hydrocarbon fires caused by standard vehicle accidents.

Certain recent events have highlighted that bridges are sensitive to the effects of thermal loading resulting in major economic impacts and the endangering of people's safety. Cable-stayed bridges remain particularly vulnerable to the effects of fire due to the potential that numerous cables can be compromised during a single fire event.

The fire threat may also be apparent during construction resulting from a cellulosic fuel source. Depsite the fact that such fires are localized, hollow core elements such as deck structures and pylons induce a chimney effect resulting in high exposure temperature to extended number of potentially vulnerable cable anchorages.

(LEFT) PROTECTED CABLE (RIGHT) UNPROTECTED CABLE

TESTING RECOMMENDATIONS FOR FIRE PROTECTION OF CABLE-STAY SYSTEMS:
PTI Recommendations for stay cable design, testing and installation (PTI DC45.1-12) provides a practical guideline for the testing of a protected system. Fire resistance and qualification testing consists of a compulsory 2 phase test regime. The VSL Fire Protection system is fully compliant with recommendations of PTI for protection durations of 45, 60, 90 minutes and above.

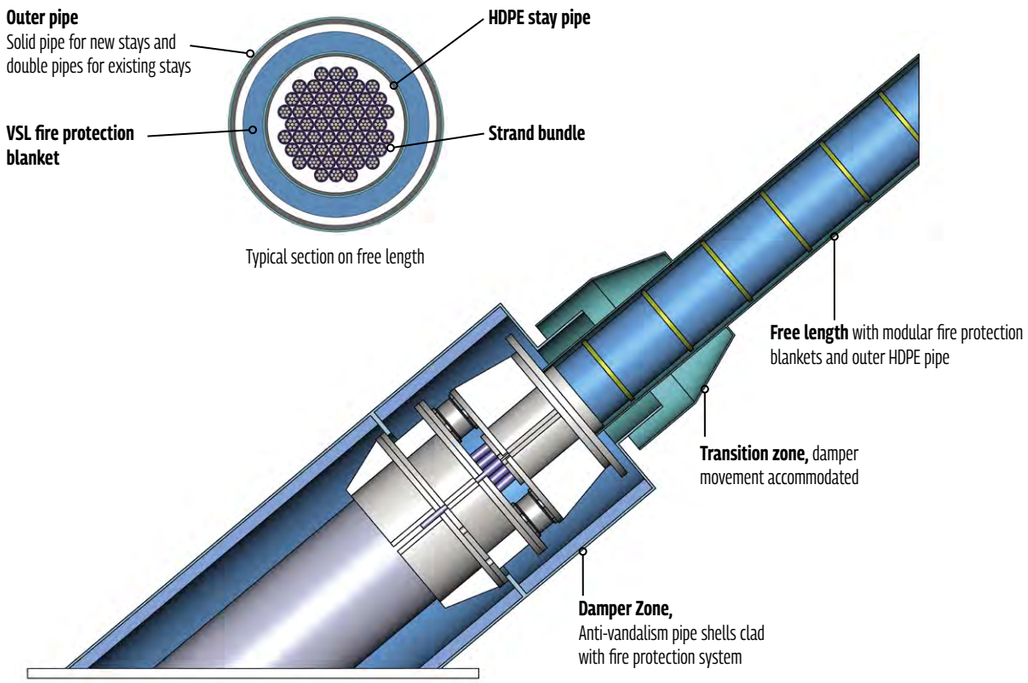

The patented VSL Fire Protection system is designed as a lightweight and flexible solution for the protection of new and existing cable-stay systems. The system responds to the needs of fire protection for critical infrastructure such as long span road and railway bridges, guyed masts and towers.

The fire protection system is based on the use of double pipes to maintain similar features as for the standard system like strand-by-strand replacement and tension adjustment with no need of dismantling of the fire protection, and therefore with limited impact on the traffic. It permits full pre-assembly of the fire protection on the stay pipe outside of critical path, making the installation of cable with fire protection as fast as the cable without fire protection. Furthermore, it makes the fire protection independent from the cable and therefore does not subject to service load deformations, which increases the durability.

TAILOR-MADE TECHNOLOGY
The system is specially designed and tested to fully integrate with the VSL stay cable systems. Using composite layering technology the system is modular and lightweight. Hydrophobic components provide resistance to moisture and biological growth, promoting system longevity.

EXTREME THERMAL PROTECTION
Certified to the strictest fire testing requirements, the VSL Fire Protection product range offers protection against varying fire scenarios and durations.

INSTALL, INSPECT AND REPLACE
Modular in design, the VSL Fire Protection is easy to install during the standard cable erection processes, or as a retrofit to existing structures. Components are removable for cable system inspection and maintenance and can be easily replaced if damage occurs.

COMPACT AESTHETICS
The VSL Fire Protection system can be fully integrated into the stay cable system with minimum impact on the cable features. This is achieved through the outer HDPE pipe which provides robustness and durability against the environment elements while maintaining cable aesthetics.

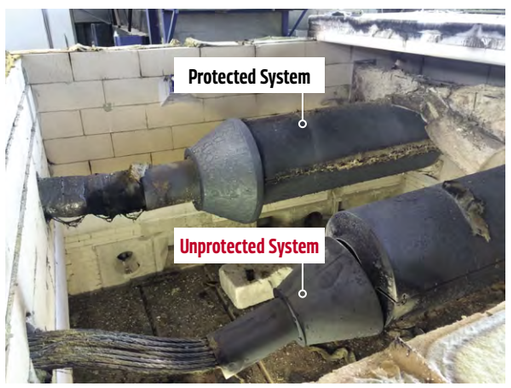

Testing qualification of VSL Fire Protection in accordance with UL1709 Hydrocarbon temperature-time curve

Risk mitigation in snow and ice conditions

INCREASING USER SAFETY BY PREVENTING SHEDDING OF LARGE ICE PARTICLES FROM BRIDGE CABLES ON THE CARRIAGEWAY
To address the safety concerns of VSL's clients about shedding of snow and ice on the carriageway of cable-supported bridges, VSL developed in cooperation with renowned experts an innovative design of rib patterns on stay pipes, which not only assists in control of snow and ice accretion but also improves mitigation against rain-wind induced vibration.

The uniquely designed protruding strakes of the stay pipe modify the way snow and ice accumulates on the cables. The accreted ice layer is fragmented, which is highly beneficial during the melting and shedding process of snow and ice. Furthermore, the surface profile retains ice in a controlled manner and allows targeted de-icing when necessary. As an additional benefit, the new design delivers improved rain-wind stability by spraying off any water rivulets forming at the surface.

MAIN FEATURES OF THE VSL DE-ICING SYSTEM FOR CONTROL OF SNOW AND ICE ACCRETION

- Superior rain-wind stability
- Drag coefficient not higher than the traditional helical fillet despite increased height
- Reduced ice accretion due to spray-off effect (precipitation icing)
- Tall concave rib with short spacing mitigates risk of ice-shedding by retaining ice longer at pipe surface and allowing gradual melting
- Profiles lead to compartmentation with varying ice thickness and pre-determined weak areas reducing size of ice particles by up to 90%
- Lower impact energy when particles hit objects (windscreens of cars)
- Controlled de-icing in combination with an active de-icing system

Ice shedding from stay pipes with the innovative rib patterns compared with the traditional helical rib

Rain spray off from stay pipes with the innovative rib patterns

Colour mix for high performance stay pipe

VSL offers now the choice of eight standard colours allowing owners and designers to select what fits best their unique structures, ranging from bright red and yellow over varied shades of grey to blue and white. Customized colours are available on request.

Particular focus has been put on the long term behaviour of the HDPE material with the combination of accelerated weathering test under laboratory conditions and real time climatic exposure tests at representative locations around the globe. The entire production process from raw material selection to pipe production is being fully controlled by VSL applying the strictest quality processes.

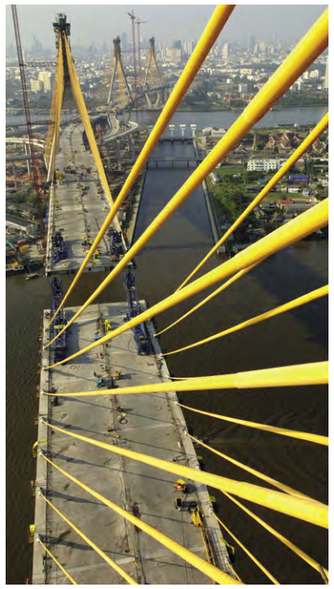

Gold color stay pipes
(Industrial Ring Road, Bangkok)

Red color stay pipes
(Sucharskiego Bridge, Poland)

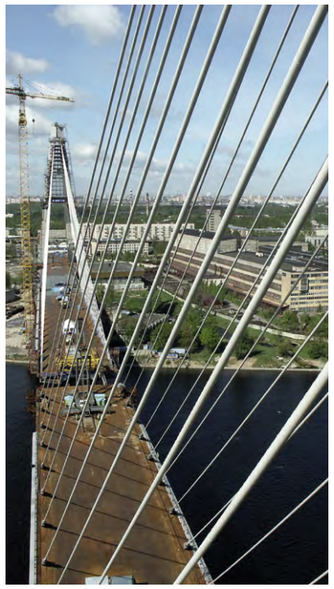

White color stay pipes
(Neva Bridge, Russia)

Signal White RAL 9003	Light Grey RAL 7035	Traffic Grey RAL 7042	Blue Grey RAL 7031
Traffic Red RAL 3020	Traffic Yellow RAL 1023	Sky Blue RAL 5015	Signal Black RAL 9005

Due to printing variations the colours indicated on this colour chart are offered as guidance only and should not be relied upon as a true representation of the actual colour of the finish. For colour verification, request an actual sample in the colour and texture prior to ordering materials.

VSL LEDsPLAY®: turning bridges into spectacular displays

VSL has developed an unprecedented LED lighting concept for stay cables, turning a bridge into a highly visible 3D screen for use as an attractive medium for the versatile display of unique light shows and informational messages. By bringing together technical solutions and services, VSL helps owners to make their bridges must-see landmarks in the hearts of cities.

VSL has developed a portfolio of dimmable LED stay cable systems under the trademark VSL LEDsPLAY® with durable, weatherproof and replaceable LED modules installed on the HDPE stay pipe.

VSL LEDsPLAY® is available in two versions addressing the specific requirements of any stay cable projects:

- An integrated solution where LEDs are located directly within the envelop of the HDPE stay pipe. It is suitable for particularly exposed cables, for which wind loading is critical.
- An external solution, fitted for new or existing cable structures. It features LEDs pods, which are secured around the stay pipe using a patented meshing arrangement.

VSL has developed both solutions complying with international recommendations associated to stay cables. VSL LEDsPLAY® system includes features to address specific mechanical and thermal behaviour of cables, while ensuring its functionalities as a giant screen. In addition to its high durability and easy maintenance, VSL LEDsPLAY® stay cable system is compact.

VSL LEDsPLAY® complements a wide range of stay pipe designs offered by VSL to accommodate various clients' expectations while maintaining all SSI 2000 benefits with respect to strand-by-strand installation, durability and maintenance.

Mock-up of the dimmable LED stay cable system

Integrated solution

External solution

3 VSL solutions for vibration control

MODELING OF VIBRATION EFFECTS
Current recommendations for stay cables issued by the various international bodies require a project-specific assessment of the dynamic effects. However, the mechanisms of dynamic excitation are a particularly complex phenomena and their reliable prediction is difficult. VSL uses analytical tools that have been developed in collaboration with internationally-renowned experts in the field. These tools simulate the cable's response under combined excitation effects while applying different stability criteria that allow estimation of the vibration risks and any additional damping required. With these tools, VSL can therefore assist designers in assessing the risk of cable vibrations and propose suitable mitigation measures for new bridges as well as existing bridges as retrofit measures.

METHODS OF CONTROLLING VIBRATIONS
Modern cable-stayed structures with ever increasing span range have to accommodate increased dynamic demands on their cables. VSL's response to this requirement includes the use of following devices:

- **Stay pipe profiles**
  The stay pipes of the VSL SSI 2000 cable are supplied with helical ribs for effective control of the risk of rain-wind induced vibrations while minimising the increase in wind drag. VSL also offers alternative stay pipe profiles as an enhanced feature with higher rain-wind induced stability and additional provision for controlled removal of snow and ice. Their shape and dimensions have been optimised and validated in wind tunnel tests.
- **Additional damping devices**
  The most versatile means of controlling vibrations is to increase the structural damping ratio of the cable by installing additional damping devices. VSL offers two damping solutions for stay cables: the VSL Friction damper and the VSL Rubber damper.

The two dampers complement each other and allow implementation of the most appropriate solution, considering the characteristics of the stay cables, the types of critical vibrations and the required performance.

FULLY INTEGRATED FOR ENHANCED AESTHETICS
The compact and highly-efficient nature of VSL Friction damper and Rubber damper allows installation close to the deck anchorage where they are incorporated into the SSI 2000 System as internal dampers, fully protected inside the anti-vandalism pipe.

The external components and shapes are identical for both systems, even though they adopt different approaches to dissipating the vibration energy. Thanks to their identical cover designs, both types of damper can be installed easily on the same structure without introducing visual differences.

TRIED AND TESTED
VSL dampers have demonstrated their outstanding performance in a series of comparative tests on full-scale samples conducted by organizations such as Shanghai's Tongji University, Hong Kong Highways Department and Korea Expressway Corporation, as well as on site.

EXTREMELY DURABLE
In addition to their high efficiency, the common qualities of both damper systems are their adaptability, great durability and low maintenance costs. The outstanding durability and long-term performance is achieved by minimizing number of movable parts, which reduces the wear and tear, and utilizing dissipation mechanisms that employ stable solid materials instead of fluids. This approach makes VSL dampers significantly more robust than other damper systems.

EASY MAINTENANCE
The damper configurations provide an easy access for inspection and maintenance operations. All components can be dismantled and/or replaced on site using light tools and equipment, with minimum impact on the bridge's operation.

VERSATILE
Both damper types are optimized for use as internal dampers, fully protected inside the VSL SSI 2000 anti-vandalism pipe, but they can also easily be adapted for retrofitting solutions or use as external dampers if required. They can be attached to both parallel strand systems (PSS) or parallel wire systems (PWS). They can be fitted on new structures or retrofitted to existing ones.

VSL SERVICES
- Analysis of stability risk
- Proposal of mitigation measures, including provision of dampers
- Estimation of the behaviour of the damper-equipped cables, taking into account excitation by aerodynamic effects and structural coupling
- Design, fabrication, workshop testing, supply and installation of a choice of two different damper systems
- Full integration of two different damper types into the VSL SSI 2000 system
- Retrofitting solutions for existing strand and parallel wire cables
- Fine-tuning of damping devices after installation to match the actual characteristics of cable and structure

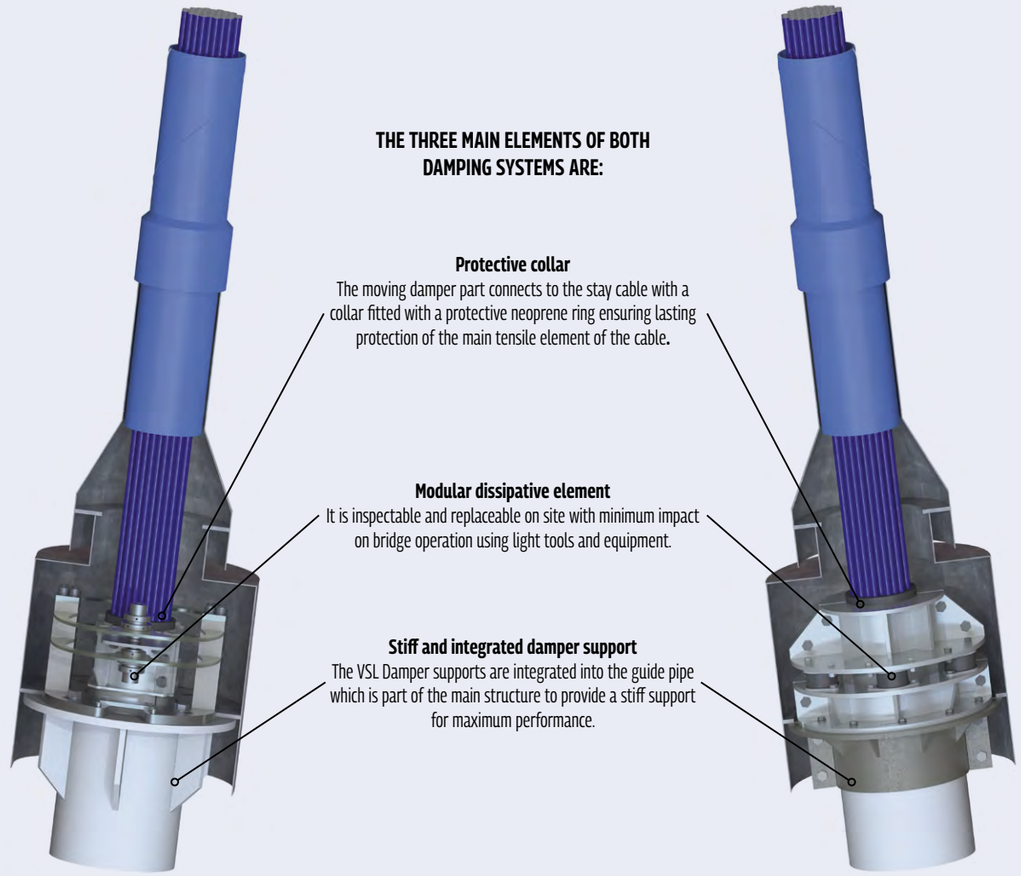

VSL Friction Damper

VSL Rubber Damper

TWO SYSTEMS COVER THE FULL RANGE OF REQUIREMENTS
Both types of VSL dampers, VSL Friction damper and Rubber damper, are widely recognized for their high damping performance, outstanding durability and low maintenance.

The VSL Friction damper is a highly efficient and durable damper for more critical applications, such as long cables or structures with an increased risk of vibration.

The VSL Rubber damper is a modular and robust damper optimised for short to medium length stay cables with moderate damping requirements and for extradosed cables.

Penang second crossing bridge, Malaysia - 2017, all 144 cables are equipped with VSL Rubber dampers.

ACCURATE ADAPTATION TO MEET DAMPING REQUIREMENTS
For both dampers, the heart of the damping system is made up of modular dissipative elements that are fully adaptable to all cable sizes.

For VSL Friction dampers, the performance can be fine-tuned once installed by adjusting the friction force without dismantling the damper.

For VSL Rubber dampers, the number of pads required is based on the dynamic characteristics of the cable.

Forth Crossing Bridge, United Kingdom - 2017, all 288 cables are equipped with VSL Friction dampers.

VSL Friction damper

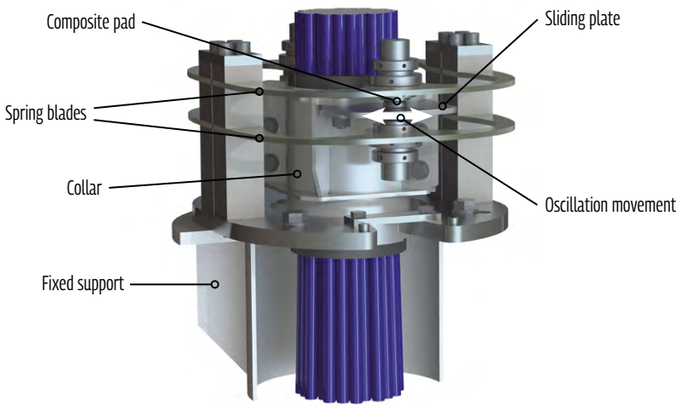

Friction damper installed prior to covering with anti-vandalism protection

DISSIPATING ENERGY THROUGH FRICTION
The patented VSL Friction damper applies the same principles used in disc brakes, dissipating the energy through friction generated between two friction partners. The first partner is a pair of sliding discs which is connected via a collar to the tensile member of the stay. It is sandwiched by the second partner, which consists of a specially developed composite pad supported by a pair of spring blades that are connected to the external structure of the guide pipe.

HIGH PERFORMANCE AND OUTSTANDING EFFICIENCY
The VSL Friction damper provides high performance for critical cases or where the damper has to be placed close to the deck anchorage relative to the overall length of the cable. The dampers can be easily integrated into the anti-vandalism protection near the deck level. The result is an aesthetically-pleasing solution that does not compromise the performance.

UNAFFECTED BY TEMPERATURE
The damper's insensitivity to temperature changes results in friction characteristics that are very stable throughout a wide temperature range. The chosen materials ensure well controlled behaviour with no stick-slip effect at the friction interface.

EXCELLENT DURABILITY
The VSL Friction damper achieves an excellent long-term performance by being designed to work only when needed. It comes into action once the displacement reaches a level that is considered critical for the cable's performance. Once activated, the damper achieves its maximum damping effect immediately and dissipates the cable's energy very efficiently to prevent any further excitation and ensure that the cable never reaches large amplitudes.
These specific characteristics make VSL Friction damper the perfect solution for any cable, but in particular for long cables on structures with an especially high damping demand or risk of parametric excitation.

ADJUSTABLE DAMPING CAPACITY
The contact force of the pads is controlled by elastic deformation of the spring blades of which the required stiffness depends on the dynamic characteristics of the cable. The spring blades are also designed to accommodate longitudinal movements of the cable while maintaining the constant friction force. Varying the stiffness of the blades allows adjustment of damping characteristics for each installation.

OTHER BENEFITS OF THE VSL FRICTION DAMPER:

- Convenient access for inspection and maintenance
- Easy fine tuning of the damping performance on site by adjustment of the friction force without the need to dismantle the damper
- Retrofitting on any existing stay cable (strand or parallel wire) on structures where unexpected cable vibrations have been observed
- All components can be replaced on site
- Damping characteristics independent of temperature variations, cable movements or vibration modes and amplitudes.

Based on the high performance measured during several full-scale tests, the VSL Friction damper can be considered amongst the most efficient passive damping devices for mitigation of stay cable vibration (Cable Dynamic Symposium Vienna 2007, proceedings, Behavior Comparison of Cable Dampers of Full-scale Experiment, S.S. Ahn, J.H Park, S.H. Lee, C.M. Park). Performances have surpassed 100% of the theoretical maximum damping that can be provided by a passive damping system to a stay cable.

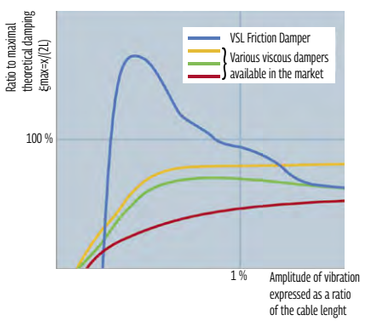

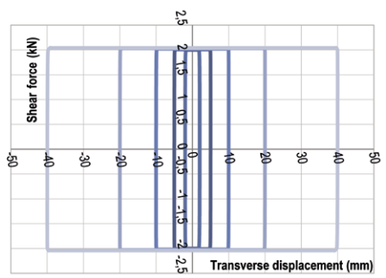

Hysteresis of a VSL Friction damper under varying shear displacement

VSL Rubber damper

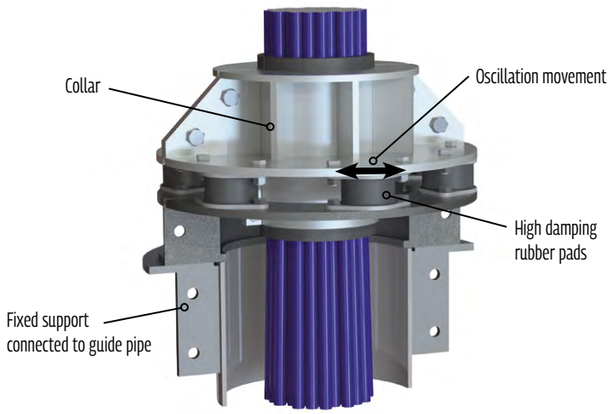

VSL Rubber damper: modular design for varying numbers of HRD pads

SHEAR DEFORMATION OF HIGH DAMPING RUBBER
The heart of the VSL Rubber damper is a high damping rubber (HDR) material, which dissipates the kinetic energy of the vibration by shear deformation of specially-designed pads. Each damper consists of a series of pads mounted between a collar attached to the tensile element of the stay cable and a fixed support rigidly connected to the guide pipe.

The HDR can withstand large shear deformations and can also cater for significant deformation under tension or compression without affecting its damping properties. This allows longitudinal movements between the cable and support to be accommodated entirely within the HDR, which avoids the need for additional hinged or sliding interfaces that would affect the damping ratio.

TAILOR-MADE PERFORMANCE
The damper performance depends purely on the damping characteristics of the rubber pads and can be adjusted for each structure by varying the number and type of pads. The damper performs at its best on short to medium length cables. Its performance can be further enhanced by increasing the distance between the damper and anchorage or by installing a second damper at the pylon.

DURABILITY WITHOUT MAINTENANCE
The high-damping rubber pads have a long design life and excellent fatigue resistance. Accelerated ageing tests have demonstrated a life expectancy of 60 years and the pads have sustained 10 million load cycles during fatigue testing.

The VSL Rubber damper requires only minimum maintenance during its operating life. This allows the damper to be placed if necessary even at the pylon where maintenance access is difficult and expensive.

HIGHLY DEFORMABLE
The damper pads, including the interface between the HDR and the mounting plates, have been designed to accommodate large deformations without damage. The dissipated energy per shear cycle even increases with increasing deformation. The maximum permissible deformation is considerably in excess of the actual movements occurring in the damper. This results in very high durability and fatigue resistance.

INDEPENDENT OF VIBRATION MODE AND AMPLITUDE
The behaviour of the VSL Rubber damper can be modelled as a combined device consisting of a spring, a friction member and a viscous element all contained in the HDR pad. This makes the damping performance of the VSL Rubber damper largely independent of the vibration mode and amplitude. It is also not sensitive to temperature variation and frequency.

GREAT SIMPLICITY
The damper is modular, with the number of pads required depending on the dynamic characteristics of the cable. The simple and versatile system can be easily adapted to any cable size whether for installation on new bridges or retrofitting of existing bridges.

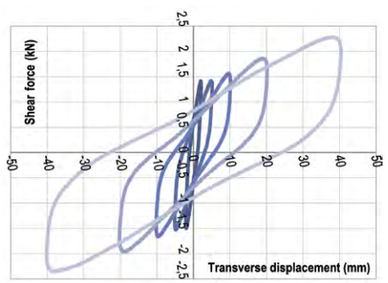

Hysteresis of a VSL Rubber damper under varying shear displacement

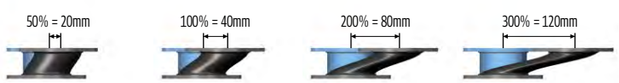

4 Strand-by-strand method for installation of cables

The strand-by-strand installation methods developed by VSL offer maximum flexibility and can be adapted to specific needs.

Mersey Gateway Bridge, United Kingdom - 2017: Strand by strand installation

Since parallel strand stay cable systems are assembled on site, it is of utmost importance for achieving a lasting high quality product, that site work is carried out by specialised VSL staff thoroughly trained in all stay cable operations from delivery to final adjustment. VSL has developed an extensive set of procedures and specific equipment. VSL is also conducting stay cable certification courses at the VSL Academy to ensure that VSL systems are installed to the same quality across the globe. VSL, by working as a full scope subcontractor for supply and installation works, is able to provide the fastest installation needed for the construction and the longest durability expected by the bridge owner.

All VSL SSI 2000 cables are installed strand-by-strand using extremely compact equipment and can be inspected and replaced if ever necessary in the same manner during construction and during service life.

AN OPTIMISED SOLUTION TO STREAMLINE COMPLEX BRIDGE ERECTION CYCLES

The equipment can be handled manually at the anchorage location inside or outside the pylons, whatever their shapes. The strand reels are light and compact compared with prefabricated cables and can be easily lifted, transported and handled. This renders the cable installation largely independent of the logistics of deck and pylon construction. As a significant part of the installation can be carried out off the critical path, tower crane usage is reduced, resulting in cost and program savings.

THE PREFERRED OPTION FOR CABLE INSPECTION OR REPLACEMENT UNDER TRAFFIC

The compact equipment allows for inspection and replacement of the entire stay cable with minimum impact on the bridge traffic, as a single lane closure is typically sufficient to provide a safe working space.

The main advantages of the VSL strand-by-strand system installation

- Absolute flexibility to adjust the cable length during construction to address variations in the bridge geometry or late changes to the deck erection methodology
- No requirement for provision of off-site prefabrication facilities
- No significant additional construction loads on the partially-completed structure as light and compact equipment is used.
- Fast erection cycle with partial and staged installation of cables for light composite deck assembly
- No additional requirement on the project's critical path for the use of tower and deck cranes during cable erection, thus reducing the risk of delay
- Light weight shop prefabricated anchorages can be pre-installed during deck and pylon construction
- Easy second stage stressing with mono-strand jacks, providing greater flexibility to designers and contractors by avoiding the relocation of heavy stressing and access equipment
- Improved site safety due to reduced component weights and simplified access arrangements
- Full replacement of cables
- Full strand-by-strand replacement during construction and during service
- Fully compatible with the VSL SSI 2000 Saddle

A MATCHING SADDLE

The VSL SSI 2000 Saddle has been specifically designed to allow application of the same strand-by-strand principles for installation, inspection and replacement of the stay cables. All strands are individually encapsulated and guided within the saddle assembly, which combines the advantages of a saddle solution with the benefits of a strand-by-strand installation method.

SPECIALIST EQUIPMENT AND PROCEDURES

The continuous stay pipe is welded on site from elements of standard length. The strands are delivered to site in compact coils and are installed one by one using a small winch system. They are individually stressed by a lightweight mono-strand jack from either the deck or the pylon end.

The VSL AMS system provides fully automatic control, recording and data management for the stressing operation on site. Specialist procedures are implemented to ensure an equal final force in all strands and safe anchoring of low cable forces at intermediate stressing stages. The system provides absolute freedom to engineers to specify stressing either to a cable force or cable elongation, depending on the characteristics of the structure. Final force tuning of the completed cables is carried out by mono-strand jack only. If lowering of cable forces during construction is unavoidable, compact multi-strand jacks have to be used. A ring nut is provided on the stressing anchorage to allow a reduction in the cable force if necessary without re-gripping the strand.

VSL Automatic Monostrand Stressing (AMS) system
The AMS system provides fully-automatic control and recording of the stressing operation and management of all relevant stressing data. The system allows absolute flexibility in defining the stressing parameters to achieve either a required cable force or cable elongation.

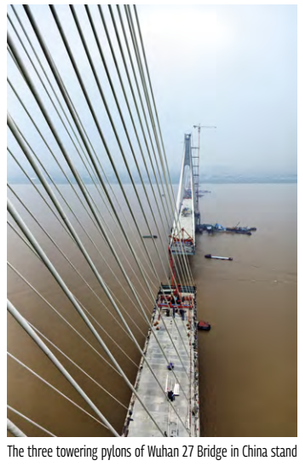

The three towering pylons of Wuhan 27 Bridge in China stand 209m high and support the two main 616m spans together with two side spans of 250m, bringing the bridge's total length to 1,732m.

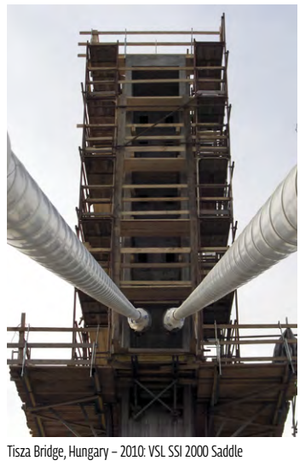

Tisza Bridge, Hungary – 2010: VSL SSI 2000 Saddle

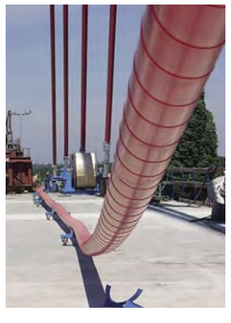

Flexible erection cycles
Lightweight equipment with independence from heavy craneage permits to overlap stay cable work with other deck construction activities and reduces the number of activities on the critical path. The cable installation activities can be easily adapted to match the requirements of the deck construction cycle.

Mandal Bridge, India – 2016: VSL supplies link members with brackets for installation of VSL SSI 2000 system

5 Life cycle management, monitoring, maintenance, repair and retrofit

VSL stay cables, a sustainable solution

Since all components of VSL stay cables are carefully designed and detailed to meet the most stringent durability criteria, replacement of components is unlikely with proper implementation of VSL's recommended inspection and maintenance plans. However, in cases that stays may get damaged due to extreme environmental events or by accidents, the VSL stay cable system is fully replaceable without requiring modifications to the structure.

In addition, the modular nature of the VSL stay cable system helps to reduce the environmental impact of maintenance operations by minimizing the amount of discarded parts generated when they have to be replaced during the structure's life cycle.

Life cycle management of structures

The structures are designed for specific functions in a defined environment. During the service life of a structure, the functions and the environmental conditions may change such as the increase in axle loadings and the severity of the weather and pollution, which can result in potential unexpected and serious deterioration problems of some elements. Consequently, for each major structure, there is a need to have an organised management and maintenance system to evaluate conditions of the structure in its environment and to plan the maintenance activities and funding to ensure unrestricted usage of the structure without major interruptions during its entire life time.

The management and maintenance system can be defined as per fib Bulletin 17 or Swiss SIA 469 standard which outline the methodology for monitoring and maintenance activities as an integral part of a general management plan and the remedial actions for repair or retrofit.

VSL can propose a life cycle management strategy so that it is possible to detect deterioration of stay components at early stage during inspection and thus appropriate maintenance intervention can be taken to mitigate the problems. Major repair and retrofit measures can be avoided.

The clients can benefit from VSL's expertise in providing professional advice on appropriate management plan including monitoring systems and maintenance programs for the structures.

Monitoring and Maintenance

The monitoring and maintenance package for cable-stayed bridges covers:

- definition of monitoring and maintenance strategy
- inspection
- instrumentation
- evaluation of data from inspection and instrumentation and planning for follow-up actions
- maintenance.

INSPECTION

VSL suggests the following inspection plans:

- A simple visual inspection every year (this visit can be combined with the normal maintenance of the bridge)
- Periodic inspection every three years
- Detailed examination every six years

The annual visit should be made by the client or by the qualified inspection company. It is recommended that the inspection for the third and the sixth years includes inspection specialists and cable stay specialists. VSL offers full inspection services.

If an unexpected phenomena is noticed during inspection services, additional actions can be planned to keep the performance of the structures in line with the design life cycle.

INSTRUMENTATION

Structural instrumentation of bridges requires simultaneous measurements of actions on the bridge and effects of these actions. It typically includes measurements of:

- wind and weather
- traffic
- seismic action
- prestressing and stay cable force
- deck and pylon displacement
- ground movements
- cable vibration.

The same instrumentation is applicable to the whole structure or to particular elements selected by the client (stay cables, dampers, bearings, etc.).

The objective of instrumentation is to help the clients in the monitoring and maintenance of their bridges and their stay cables. VSL can propose a tailor-made instrumentation packages, which may include provision of accelerometers, wind and rain sensors, load cells, temperature sensors, smoothly integrated into the VSL stay cable system. Such offers are complementary to the standard design, supply and installation package generally offered by VSL.

VSL developed a fully integrated technology based on a high-speed fieldbus network on site and the latest secured Internet technology to transfer and give access to the data to both client and designer. The fieldbus system allows adding, replacing or removing sensors at any time with affordable hardware cost. Checking of the system can be made off-site reducing also the maintenance cost of the instrumentation.

EVALUATION OF DATA FROM INSPECTION AND INSTRUMENTATION AND PLANNING OF FOLLOW-UP ACTIONS

Provided with the data from inspection and instrumentation, the engineer can:

- assess the necessity for renewal of corrosion protection systems and/or replacement of elements
- assess the actions and their effects
- assess the state of fatigue
- forecast the probable evolution of the bridge.

VSL can assist the engineer in the interpretation of the data and if required the fine-tuning of the monitoring strategy and/or the planning of maintenance interventions to ensure the intended usage of the bridge for its residual life span.

MAINTENANCE

The organization of the maintenance program depends on the design of the stay cable system and particularly on the considered design life for the system and its components. The design life of the stay cable can only be achieved if the cable stays are appropriately maintained.

VSL proposes 2 types of maintenance operations: common and specialized operation. The common operation such as cleaning, tightening of bolts, replacement of secondary components, etc. can be conduced by local teams. The specialized operation such as cable force measurement and adjustment, renewal of corrosion protection, repair of stay pipe and strand sheathing, and partial or total replacement of stay cable components must be conducted by VSL specialists.

Maintenance access is of main importance but sometimes not sufficiently taken in account during the project preparation. In general, three types of access shall be considered: permanent access on the structure, inspection access and maintenance and repair access. During the design stage of a bridge, VSL can assist the engineer to properly define access required for inspection and maintenance operations.

VSL's tools for monitoring solutions

VSL's Vibratest for inspection of stay cables and dampers

Cable forces and cable damping values are very important both during and after construction. VSL offers vibration measurement tools to quickly and efficiently determine cable forces and damping characteristics.

Vibratest allows high-accuracy determination of cable forces and damping values by vibration measurements. It offers real-time analysis with easy-to-use graphical interface. It is also very compact and thus can be easily used on site to detect any change in the stay cable's behaviour and the damper efficiency through periodical measurements.

VSL Vibratest set-up and testing

VSL's load cells

Alternatively, VSL can equip cable with single strand load cells for assessment of cable forces during construction and service life. Equipping cables with these devices allows collection of all the necessary data to optimize maintenance, validate design assumptions, diagnose mechanisms of deterioration and detect damage at an early stage

VSL load test

Repair and retrofit

Main reasons for deterioration of stay cables of older bridges are fatigue, corrosion, mechanical damage and excessive vibration. VSL can offer tailor-made repair and retrofit measures to suit the specific requirements for the bridge.

CHALLENGES IN REPAIR AND RETROFIT
The main challenges in repair and retrofit are:

- control of vibration and fatigue issues associated with vibrations
- assessment of conditions of stay cable elements, especially of older systems which include cement grout or epoxy fillers, at reasonable cost and with reasonable confidence
- control and elimination of moisture and corrosion inside cable components.
- definition of safe and efficient methods and procedures to replace existing cables or cable components
- proper and safe access for inspection of cables.

REPAIR AND RETROFITTING INTERVENTIONS
The repair and retrofit measures for cable-stayed bridges include:

- cable force measurement
- adjustment of the cable force (re-tensioning or de-tensioning). Change of locked-in cable forces is however unusual and does often indicate the structure has more fundamental short comings which need to be addressed by the design engineer.
- renewal of corrosion protection
- stay pipe repair
- strand sheath repair
- guide deviator replacement
- replacement or installation of damping system
- strand replacement
- stay pipe replacement
- partial or total replacement of a stay cable
- replacements of cross cables.

VIBRATION
If on an existing bridge, cables are subjected to excessive vibration, VSL is able to retrofit such cables with either the VSL Friction damper or VSL Rubber damper. VSL dampers are suitable for any kind of stay cables.

REPLACEMENT OF STAY CABLES
In addition to traditional repair and retrofit works, VSL has the capability to offer replacement of defective or corroded stay cables by modern stay cables consisting of individually protected strands that are simple to monitor, re-tension and to replace if ever necessary.

FIRE PROTECTION
In a changing security environment, there is a significant need to improve the resilience of existing cable-stayed structures by adding fire protection. VSL can provide full design & build services for such works applying its fully tested and certified proprietary system. VSL is an ideal partner for such work since it has a well tested fire protection system which is suitable for new and existing stay cable bridges of any kind.

PROVISION FOR REMOVAL OF ACCRETION OF ICE AND SNOW ON STAY PIPES
In cold countries with high humidity or snow fall, ice can form on stay pipes and drop down once the temperature increases. The falling of large ice particles onto the bridge carriageway presents an exceptionally high safety risk to vehicles and people using the bridge. The engineering community has only recently learned that measures need to be taken to manage such risks to avoid accidents. VSL is able to propose solutions for existing bridges, which minimizes the size of falling ice particles and allow a fast controlled removal with minimum traffic interference.

Site insight

STAY CABLE REPLACEMENT OF CHING CHAU MIN JIANG BRIDGE, FUZHOU, CHINA – 2002
Severe damage occurred during a typhoon to some stay pipes and strands. Since stay pipes were damaged, it was not possible to just replace the damaged strands but the entire cables had to be removed and replaced. Removal was achieved in reversed sequence to the single strand installation.

MONITORING OF RADES LA GOULETTE BRIDGE, TUNISIA – 2010
The Rades-la-Goulette bridge is being monitored by the Tunisian administration using VSL instrumentation. The extradosed cables are made up of 37 strands passing through a saddle in the pylon and anchored in the deck with VSL anchorages. Eight of the 16 stays are equipped with VSL load cells to monitor the forces in the stays.

C

Technical data for the VSL stay cable systems

Technical data for the VSL stay cable systems

In this chapter, VSL gives all the technical data for every component of its VSL stay cable systems.

P. 46-47

P. 48-51

P. 52

P. 53

P. 54

P. 55

1 Anchorage arrangements and stay pipe options

Stay anchorage arrangements

Depending on how cable forces are introduced into pylon and deck or on what kind of protection levels are specified at deck level, a suitable arrangement is selected:

Pylon	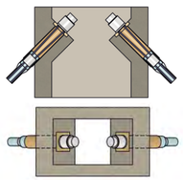 T1 (inside)	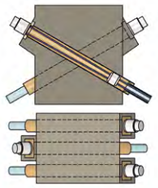 T2 (overlapped)	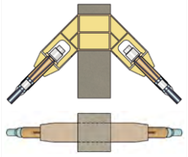 T3 (outside with steel bracket and link[1])	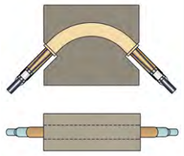 T4 (saddle)	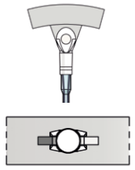 T5 (clevis)

Deck	Basic	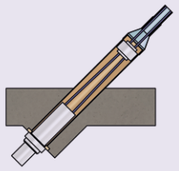 B1 (below	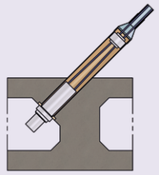 B2 (inside)	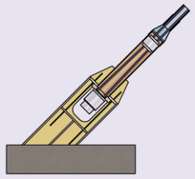 B3 (above)	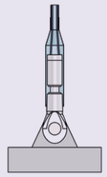 B4 (clevis)
	With Dampers	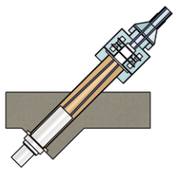 B1D	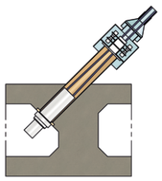 B2D	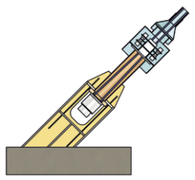 B3D	Details available upon request
	With Fire Protection	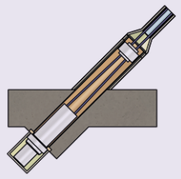 B1F	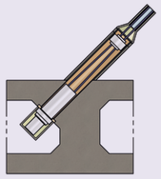 B2F	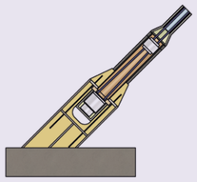 B3F	Details available upon request
	With Dampers and Fire Protection	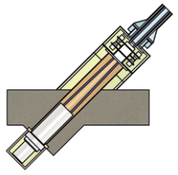 B1DF	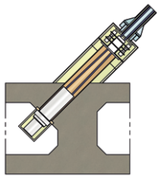 B2DF	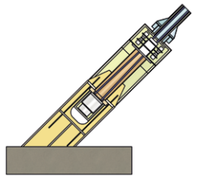 B3DF	Details available upon request

(1) A link member with bracket is not a stay system component. It is therefore normally designed and detailed by the engineer of record. However, VSL can provide dimensions and supply upon request.

Anchorage and stay pipe options

The following matrix shows possible combination of anchorage arrangements and free length for the four VSL stay cable systems:

		Type of Cables			
		Stays with anchorages at top and bottom (normal corrosion protection) --> refer to page 20-21	**Stays dehumidified with anchorages at top and bottom** (special corrosion protection) --> refer to page 22-23	**Stays with saddles at top** --> refer to page 26-27	**Stays with clevis at one or both ends** --> refer to page 24-25
Type of anchorages	Type of anchorage arrangement	T1, T2, T3 / B1, B2, B3	T1 / B2	T4 / B1, B2	T5 / B4
	Cable unit	6-12 – 6-187 [1]	6-12 – 6-187 [1]	6-12 – 6-169 [1]	6-3 – 6-109 [1]
	Adjustable anchorage	SSI 2000e DR	SSI 2000D DR	SSI 2000e DR	MSI 2000 DR SSI 2000e DR
	Fixed anchorage	SSI 2000e DS	SSI 2000D DS	NA	MSI 2000 DS
	Saddle	NA	NA	SSI 2000 Saddle	NA
	Additional feature at deck:				
	→ Anti-vandalism pipe	← VSL AVP →			
	→ Damper	← VSL FD or VSL RD →			
	→ Fire protection	← VSL FP →			
Free length	Type of strands	PE coated waxed / greased black or galvanized	Galvanized	PE coated waxed / greased black or galvanized	
	Stay pipe → Diameter	Standard / Compact	Super compact	Standard / Compact	Compact
	→ Helical ribs	← Optional →			
	→ De-icing system	← Optional →			
	→ Dimmable LED system	← Optional →			
	→ Colours	← Optional →			

Abbreviations:
AVP: Anti vandalism pipe
FP: Fire Protection
FD: Friction Damper
RD: Rubber Damper

This technical brochure, 'VSL SSI 2000 Stay Cable Systems', gives an overview of the available stay cable systems and their fields of application. The current VSL SSI 2000 stay cable systems are the results of more than 60 years of experience and continuous research and development. The information published in this brochure may be subject to changes without prior notice. Local VSL representatives can assist in providing latest information.

(1) Bigger units available on request.

2 VSL SSI 2000

Main dimensions of systems

SSI 2000e DS FIXED ANCHORAGE — FREE LENGTH — SSI 2000e DR STRESSING ANCHORAGE

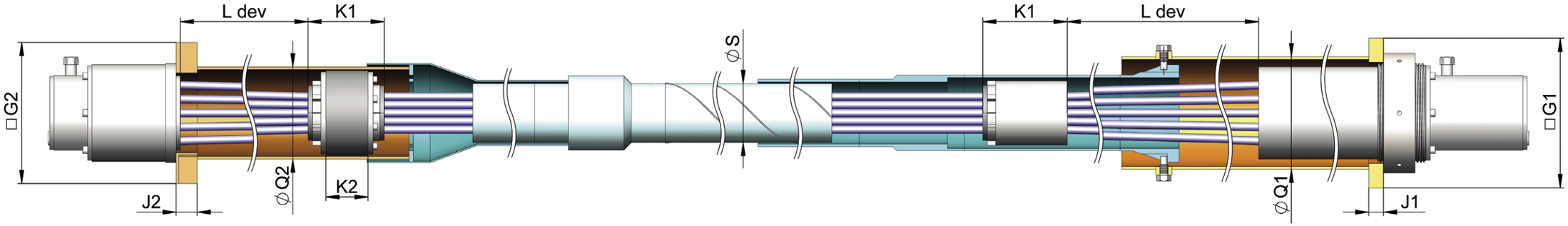

DS ANCHORAGE

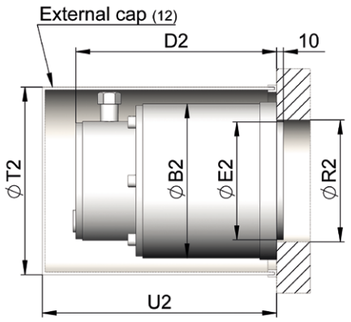

CABLE UNIT	BREAKING LOAD AT 100% GUTS	ADMISSIBLE LOAD AT 50% GUTS	ADMISSIBLE LOAD AT 60% GUTS	HORIZONTAL FORCE ON GUIDE DEVIATOR
	[kN] (1)	[kN] (2)	[kN] (3)	[kN] (8)
6-12	3,348	1,674	2,009	50
6-19	5,301	2,651	3,181	80
6-22	6,138	3,069	3,683	92
6-27	7,533	3,767	4,520	113
6-31	8,649	4,325	5,189	130
6-37	10,323	5,126	6,194	155
6-43	11,997	5,999	7,198	180
6-55	15,345	7,673	9,207	230
6-61	17,019	8,510	10,211	255
6-73	20,367	10,184	12,220	306
6-85	23,715	11,858	14,229	356
6-91	25,389	12,695	15,233	381
6-109	30,411	15,206	18,247	456
6-127	35,433	17,717	21,260	531
6-139	38,781	19,391	23,269	582
6-151	42,129	21,065	25,277	632
6-169	47,151	23,576	28,291	707
6-187 (9)	52,173	26,087	31,304	783

CABLE UNIT	STAY PIPE		
	STANDARD	COMPACT	SUPER COMPACT
	ØS / thk	ØS / thk	ØS / thk
	[mm] (4)	[mm] (4) (6)	[mm] (5) (6)
6-12	125 / 4.9	110 / 4.3	90 / 4.3
6-19	140 / 5.4	125 / 4.9	110 / 4.3
6-22	160 / 6.2	125 / 4.9	110 / 4.3
6-27	160 / 6.2	140 / 5.4	125 / 4.9
6-31	160 / 6.2	140 / 5.4	125 / 4.9
6-37	180 / 5.6	160 / 6.2	140 / 5.4
6-43	200 / 6.2	180 / 5.6	160 / 6.2
6-55	200 / 6.2	180 / 5.6	160 / 6.2
6-61	225 / 7.0	200 / 6.2	180 / 5.6
6-73	250 / 7.8	210 / 6.6	200 / 6.2
6-85	250 / 7.8	225 / 7.0	200 / 6.2
6-91	280 / 8.7	250 / 7.8	225 / 7.0
6-109	315 / 9.8	280 / 8.7	225 / 7.0
6-127	315 / 9.8	280 / 8.7	250 / 7.8
6-139	315 / 9.8	- (10)	- (10)
6-151	355 / 11.1	- (10)	- (10)
6-169	355 / 11.1	- (10)	- (10)
6-187 (9)	400 / 12.3	- (10)	- (10)

CABLE UNIT	DEVIATION DEVICE			DS - FIXED END				DS - FIXED END					
				BEARING PLATE			GUIDE PIPE	SSI 2000e (4) / SSI 2000D (5)					
	K1	K2	L dev (min)	G2	J2	ØR2	ØQ2 / thk	ØB2	D2	ØE2	ØT2	U2
	[mm]	[mm]	[mm]	[mm] (7)	[mm] (7)	[mm]	[mm] (7)	[mm]	[mm]	[mm]	[mm] (12)	[mm] (12)
6-12	160	60	800	260	35	150	177.8 / 4.5	190	300	144	219	300
6-19	180	100	1100	335	50	182	219.1 / 6.3	230	300	176	250	300
6-22	210	100	1250	355	50	202	219.1 / 6.3	250	300	196	273	300
6-27	210	120	1350	380	50	216	244.5 / 6.3	270	300	210	300	300
6-31	210	120	1450	415	60	226	244.5 / 6.3	280	300	220	310	300
6-37	210	120	1600	455	70	250	273 / 6.3	310	300	244	340	300
6-43	210	140	1850	505	75	280	323.9 / 7.1	340	300	274	370	300
6-55	260	140	1950	550	75	290	323.9 / 7.1	380	300	284	406	300
6-61	260	160	2150	585	85	316	355.6 / 8	390	315	310	420	315
6-73	290	180	2350	650	95	346	406.4 / 8.8	435	330	340	457	330
6-85	290	200	2500	685	110	356	406.4 / 8.8	440	360	350	470	360
6-91	320	200	2700	730	110	386	457 / 10	480	370	380	508	370
6-109	320	220	2850	775	120	406	457 / 10	500	380	400	530	380
6-127	340	220	3250	845	130	450	508 / 11	550	430	444	580	430
6-139	370	240	3300	900	135	460	508 / 11	580	435	454	- (10)	- (10)
6-151	380	240	3400	920	140	470	559 / 12.5	590	445	464	- (10)	- (10)
6-169	400	260	3800	970	150	520	610 / 12.5	640	465	514	- (10)	- (10)
6-187 (9)	400	260	3800	1000	160	530	610 / 12.5	660	485	524	- (10)	- (10)

(1) Based on strand specification as per EN 10138 (150mm2,1860MPa); reduction required for ASTM A416 or BS 5896; GUTS = Guaranteed Ultimate Tensile Strength of strand.
(2) Recommended max. service stress for stay cables as per fib bulletin No.30 and CIP
(3) Recommended max. service stress for extradosed cables as per CIP
(4) Galvanized and sheathed strand with a minimum sheathing thickness of 1.5mm
(5) Galvanized strand in accordance with NF A 35-035, applicable for dehumidified system (VSL SSI 2000D)
(6) Further reduced dimensions may be proposed.

DR ANCHORAGE

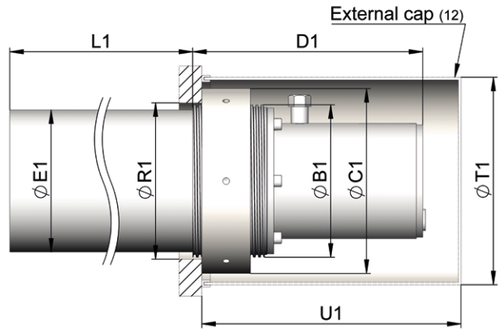

CABLE UNIT	DR - STRESSING END				DR - STRESSING END							
	BEARING PLATE			GUIDE PIPE	SSI 2000e (4) / SSI 2000D (5)							
	G1	J1	ØR1	ØQ1 / thk	ØB1	ØC1	D1	ØE1	L1 SSI 2000e	L1 SSI 2000D	ØT1	U1
	[mm] (7)	[mm] (7)	[mm]	[mm] (7)	[mm]	[mm]	[mm]	[mm]	[mm] (11)	[mm]	[mm] (12)	[mm] (12)
6-12	290	30	196	219.1 / 6.3	190	230	330	177,8	535 / -	35	250	440
6-19	355	35	241	267 / 6.3	235	285	355	219,1	535 / -	35	310	450
6-22	385	40	261	298.5 / 7.1	255	310	360	244,5	535 / -	35	330	450
6-27	425	40	281	323.9 / 7.1	275	335	390	244,5	540 / 740	35	355	470
6-31	440	45	291	323.9 / 7.1	285	350	410	273	540 / 740	35	370	480
6-37	485	50	316	355.6 / 8	310	380	440	298,5	540 / 740	35	406	490
6-43	540	55	356	406.4 / 8.8	350	425	450	323,9	540 / 740	35	457	500
6-55	585	60	391	419 / 10	385	470	490	368	540 / 740	35	508	520
6-61	600	65	391	419 / 10	385	470	530	368	540 / 740	35	508	555
6-73	680	75	446	508 / 11	440	530	540	406,4	550 / 750	35	560	555
6-85	710	80	446	508 / 11	440	540	590	406,4	550 / 750	35	570	615
6-91	760	80	496	559 / 12.5	490	590	600	457	550 / 750	35	620	635
6-109	795	90	511	559 / 12.5	505	610	640	457	550 / 750	35	640	660
6-127	865	95	566	610 / 12.5	560	670	670	508	550 / 750	35	700	720
6-139	910	100	590	660 / 12.5	580	700	695	559	560 / 760	- (10)	- (10)	- (10)
6-151	940	100	590	660 / 12.5	580	720	695	559	560 / 760	- (10)	- (10)	- (10)
6-169	1000	110	650	711 / 12.5	640	790	730	610	560 / 760	- (10)	- (10)	- (10)
6-187 (9)	1050	120	670	711 / 12.5	660	820	770	610	560 / 760	- (10)	- (10)	- (10)

(7) Square bearing plate based on concrete strength of 45MPa cube (36MPa cylinder); dimensions can be adjusted for other concrete strength or steel structures
(8) SLS Level; based on 2.5% of max. static force of 60% GUTS
(9) Bigger units available on request
(10) Dimensions available on request
(11) Longer transition pipe may be needed for very long cables.
(12) The external cap is standard for SSI 2000D and used in case of C5 exposure for SSI 2000e anchorages.

Integration of systems into the structures

The location of the stressing anchorage (deck or pylon) and whether strands coming out of the anchorages shall be bundled into the free length configuration by tension deviator ring or guide deviator can be selected from the proposed standard arrangement below.

	Stressing anchorage (DR)		Fixed anchorage (DS)	
	Guide deviator	Tension ring	Guide deviator	Tension ring
Pylon	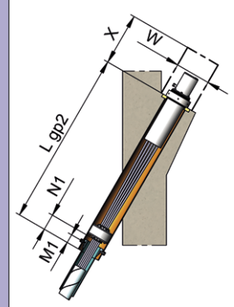	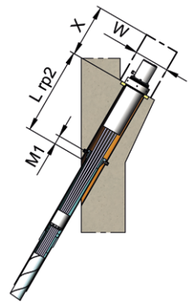	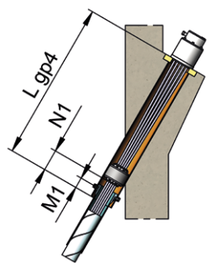	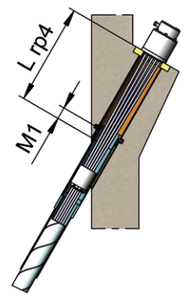
Deck	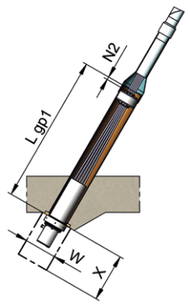	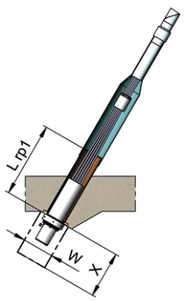	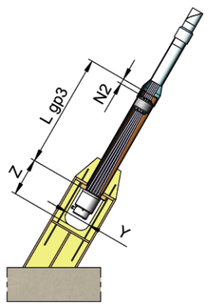	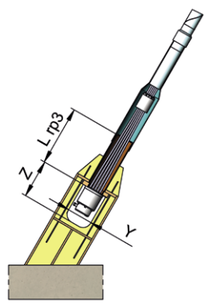

VSL offers two options to bundle the strands into smallest possible diameter in order to optimize the stay pipe diameter. Guide deviators are used not only to bundle the strands but also to realign the strand bundle so that the strands are not in contact with guide pipes. Tension rings are purely used to bundle the strands. They are always used in combination with saddles and at deck level if cables are equipped with dampers (damper collar). Tension rings may be used at pylon and deck to eliminate and shorten respectively the guide pipe protrusion to simplify construction and improve aesthetics. Whenever possible, the guide deviator should be used instead of the tension ring since it increases permissible geometrical construction tolerances with regard to guide pipe positioning and alignment.

Required clearance
In case of facing stressing anchorages, it is recommended to provided two times the minimum clearance. If reduced clearances are required, please contact VSL.

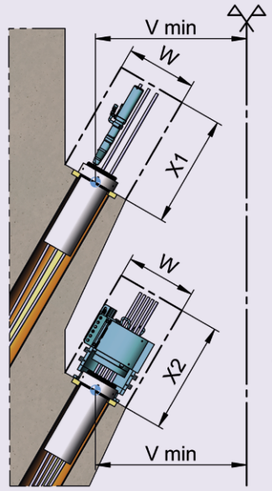

Stressing with monostrand jack

Stressing / lowering of stay force with multistrand jack

CABLE UNIT	REQUIRED CLEARANCES		REQUIRED JACK CLEARANCES			
	Y	Z	V min	W	X1	X2
	[mm]	[mm]	[mm]	[mm]	[mm]	[mm]
6-12	250	450	1500	490	1000	1000
6-19	300	450	1500	490	1000	1000
6-22	320	450	1500	620	1050	1100
6-27	340	450	1500	620	1050	1100
6-31	350	450	1500	620	1050	1100
6-37	380	450	1500	620	1050	1100
6-43	410	450	1500	620	1050	1100
6-55	450	450	1500	800	1100	1200
6-61	460	470	1500	800	1100	1200
6-73	530	500	1500	800	1100	1200
6-85	540	530	1500	800	1150	1300
6-91	580	540	1500	800	1150	1300
6-109	600	550	1800	970	1200	1500
6-127	650	600	1800	970	1200	1500
6-139	700	610	2000	- (2)	1250	- (2)
6-151	710	620	2000	- (2)	1250	- (2)
6-169	760	640	2000	- (2)	1250	- (2)
6-187 (1)	780	660	2000	- (2)	1250	- (2)

CABLE UNIT	LENGTH OF GUIDE PIPE (GUIDE DEVIATOR)				LENGTH OF GUIDE PIPE (TENSION RING)				DEVIATION DEVICE / EXPANSION SLEEVE FIXITY		
	GUIDE PIPE - DR		GUIDE PIPE - DS		GUIDE PIPE - DR		GUIDE PIPE - DS				
	L gp1	L gp2	L gp3	L gp4	L rp1 (4)	L rp2 (4)	L rp3 (4)	L rp4 (4)	M1	N1	N2
	[mm] (3)	[mm] (3)	[mm]	[mm]	[mm] (3)	[mm] (3)	[mm]	[mm]	[mm]	[mm]	[mm]
6-12	1545	1695	1020	1170	1000	1000	500	500	100	200	50
6-19	1865	2015	1340	1490	1000	1000	500	500	100	200	50
6-22	2045	2195	1520	1670	1000	1100	500	600	100	200	50
6-27	2150 / 2350	2350 / 2550	1620	1820	1000 / 1200	1300 / 1500	500	800	150	250	50
6-31	2250 / 2450	2450 / 2650	1720	1920	1000 / 1200	1300 / 1500	500	800	150	250	50
6-37	2400 / 2600	2600 / 2800	1870	2070	1000 / 1200	1300 / 1500	500	800	150	250	50
6-43	2650 / 2850	2850 / 3050	2120	2320	1000 / 1200	1600 / 1800	500	1100	150	250	50
6-55	2800 / 3000	3000 / 3200	2270	2470	1000 / 1200	1900 / 2100	500	1400	150	250	50
6-61	3000 / 3200	3200 / 3400	2470	2670	1000 / 1200	1900 / 2100	500	1400	150	250	50
6-73	3290 / 3490	3540 / 3740	2750	3000	1500 / 1700	1900 / 2100	1000	1400	200	350	100
6-85	3440 / 3640	3690 / 3890	2900	3150	1500 / 1700	2100 / 2300	1000	1600	200	350	100
6-91	3670 / 3870	3920 / 4120	3130	3380	1500 / 1700	2100 / 2300	1000	1600	200	350	100
6-109	3820 / 4020	4070 / 4270	3280	3530	1500 / 1700	2600 / 2800	1000	2100	200	350	100
6-127	4240 / 4440	4490 / 4690	3700	3950	1500 / 1700	2900 / 3100	1000	2400	200	350	100
6-139	4330 / 4530	4580 / 4780	3780	4030	1500 / 1700	3100 / 3300	1000	2600	200	350	100
6-151	4440 / 4640	4690 / 4890	3890	4140	1500 / 1700	3600 / 3800	1000	3100	200	350	100
6-169	4860 / 5060	5110 / 5310	4310	4560	1500 / 1700	3800 / 4000	1000	3300	200	350	100
6-187 (1)	4860 / 5060	5100 / 5310	4310	4560	1500 / 1700	3800 / 4000	1000	3300	200	350	100

(1) Bigger units available on request
(2) Dimensions available on request
(3) Dimensions depend on length L1 of transition pipe (refer to page 48 - 49).
(4) Can be reduced if required, please contact VSL.

3 VSL MSI 2000

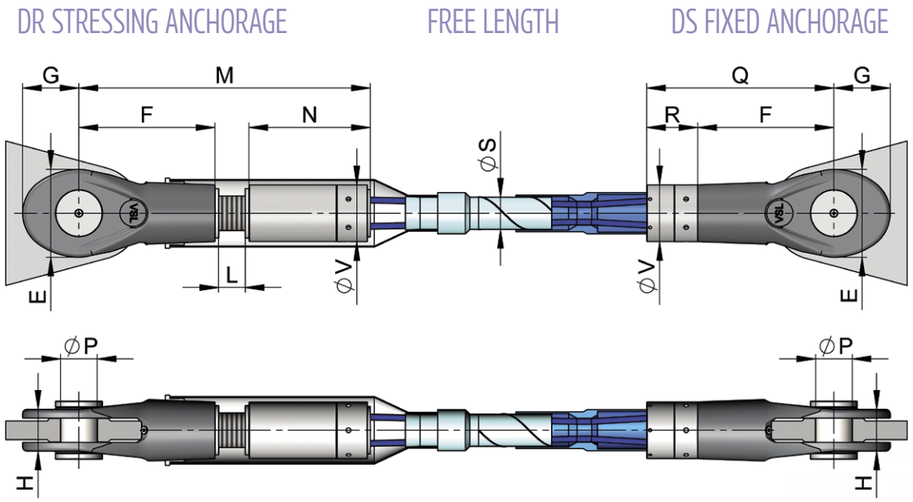

CABLE UNIT	FORK + PIN					DR + DS ANCHORAGE						STAY CABLE
	E	F	G	H	ØP	L (1)	M (1)	N (1)	Q	R	ØV	ØS / thk
	[mm]	[mm]	[mm]	[mm]	[mm]	[mm]	[mm]	[mm]	[mm]	[mm]	[mm]	[mm]
6-3	155	220	92	65	55	140	885	500	440	220	114	75 / 4.3
6-4	180	260	110	75	70	140	945	520	475	215	121	75 / 4.3
6-7	230	350	145	97	90	140	1061	545	555	205	153	75 / 4.3
6-12	300	465	193	143	125	140	1196	565	640	175	194	110 / 4.3
6-19 (2)	390	560	235	175	150	140	1335	595	715	155	245	125 / 4.9

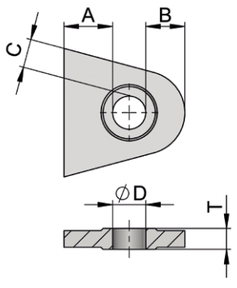

CABLE UNIT	GUSSET FLANGE (3)				
	A	B	C	ØD	T
	[mm]	[mm]	[mm]	[mm]	[mm]
6-3	80	70	50	56	35
6-4	90	80	60	71	40
6-7	120	100	70	91	50
6-12	150	150	110	127	80
6-19 (2)	180	180	130	152	100

(1) Based on ±100 adjustability. Further adjustability available on request.
(2) Bigger units 6-22 to 6-109 available on request
(3) Not given dimensions of gusset flange to be defined by the designer according to local regulations. Contact VSL for more information

4 VSL SSI 2000 Saddle

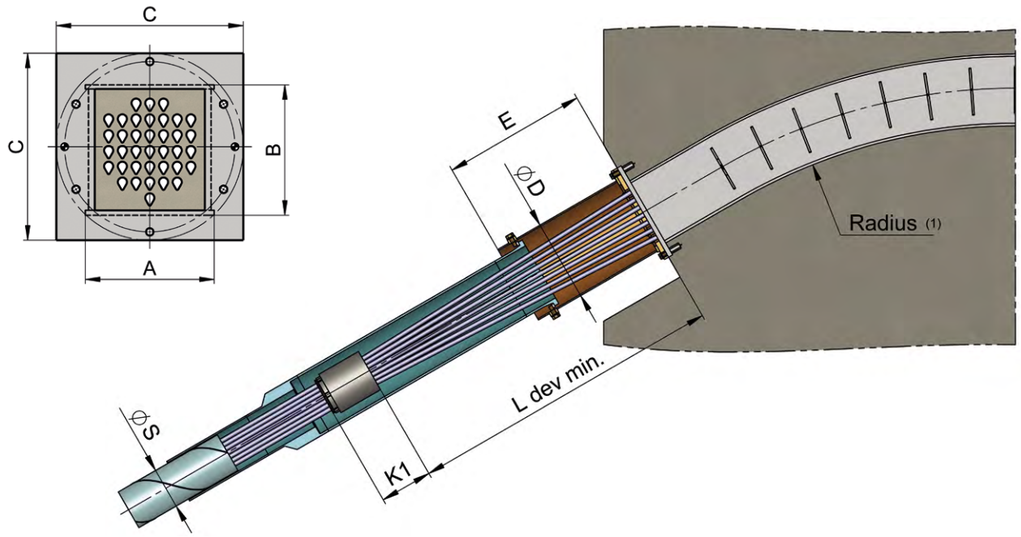

CABLE UNIT	BREAKING LOAD AT 100% GUTS	RADIAL BEARING PRESSURE AT 2.0m RADIUS	SADDLE BODY			STAY PIPE CONNECTION				STAY PIPE
			A	B	C	ØD / thk	E	L dev	K1	ØS / thk
	[kN]	[MPa] (1)	[mm]	[mm]	[mm]	[mm]	[mm]	[mm]	[mm]	[mm]
6-12	3,348	9	185	199	320	219.1 / 4.5	276	1500	160	125 / 4.9
6-19	5,301	12	230	239	350	244.5 / 5.0	426	1800	180	140 / 5.4
6-22	6,138	13	230	264	370	273 / 5.0	526	2000	210	160 / 6.2
6-27	7,533	13	300	274	420	323.9 / 5.6	526	2200	210	160 / 6.2
6-31	8,649	14	300	274	420	323.9 / 5.6	526	2300	210	160 / 6.2
6-37	10,323	17	310	314	450	355.6 / 5.6	630	2600	210	180 / 5.6
6-43	11,997	16	375	314	470	355.6 / 5.6	936	2600	210	200 / 6.2
6-55	15,345	20	380	349	510	406.4 / 6.3	836	3000	260	200 / 6.2
6-61	17,019	20	430	394	560	450 / 6.0	836	3300	260	225 / 7.0
6-73	20,367	23	450	419	580	460 / 6.0	1126	3500	290	250 / 7.8
6-85	23,715	26	460	454	610	508 / 6.3	826	3750	290	250 / 7.8
6-91	25,389	24	520	469	670	560 / 6.0	826	4250	320	280 / 8.7
6-109	30,411	28	550	494	680	560 / 6.0	1026	4500	320	315 / 9.8
6-127	35,433	30	600	549	760	610 / 6.3	1226	5100	340	315 / 9.8
6-139	38,781	28	700	580	800	680 / 6.0	1500	6500	370	315 / 9.8
6-151	42,129	27	770	615	870	720 / 6.0	1800	6700	380	355 / 11.1
6-169 (2)	47,151	31	770	660	870	760 / 6.0	1800	7250	400	355 / 11.1

Saddle length, angle and radius defined upon specific project requirements. In general, the recommended minimum radius is 2.0m. For smaller values, please contact VSL.

For checking of out of balance force and required friction resistance, please contact VSL.

(1) Contact pressure between saddle and pylon uniformly distributed over saddle length based on 2.0m radius and max. stress of 100% GUTS.
(2) Bigger units available on request

5 VSL Damper

VSL Friction damper

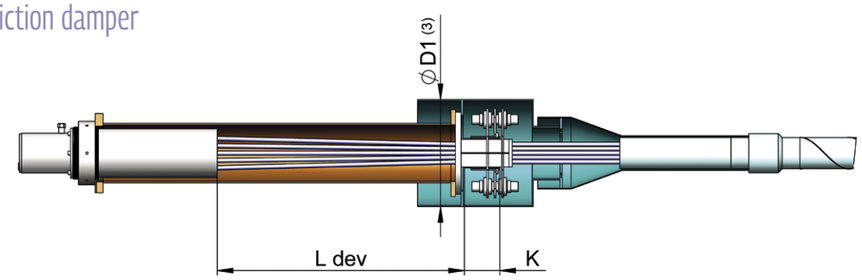

VSL Rubber damper

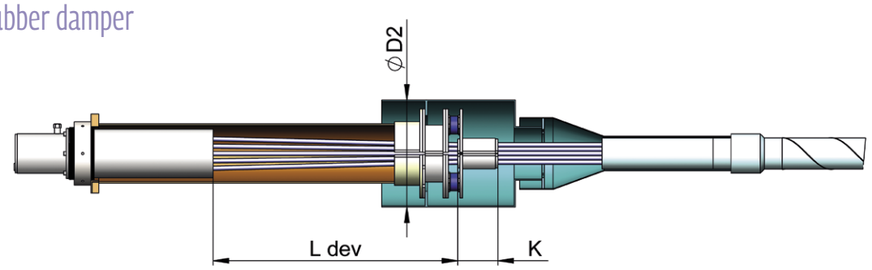

CABLE UNIT	FRICTION DAMPER RUBBER DAMPER			
	K	L dev (2)	ØD1 (3)	ØD2
	[mm]	[mm]	[mm]	[mm]
6-12	160	800	430	410
6-19	180	1100	450	430
6-22	210	1250	470	450
6-27	210	1350	505	470
6-31	210	1450	505	470
6-37	210	1600	545	470
6-43	210	1850	585	490
6-55	260	1950	610	510
6-61	260	2150	630	530
6-73	290	2350	650	530
6-85	290	2500	380	560
6-91	320	2700	700	570
6-109	320	2850	730	600
6-127 (1)	340	3250	740	620

Table of indicative dimensions for the use of stressing or fixed anchorage at the damper location level.
Not given dimensions are defined upon specific project requirements. Please contact VSL for detailed dimensions.

(1) Bigger units available on request
(2) Min. damper installation length; please contact VSL for suitable damper installation length to meet the specified damping requirement for the project.
(3) Indicative dimension, which may vary according to projects based on damper stroke.

6 VSL Fire Protection

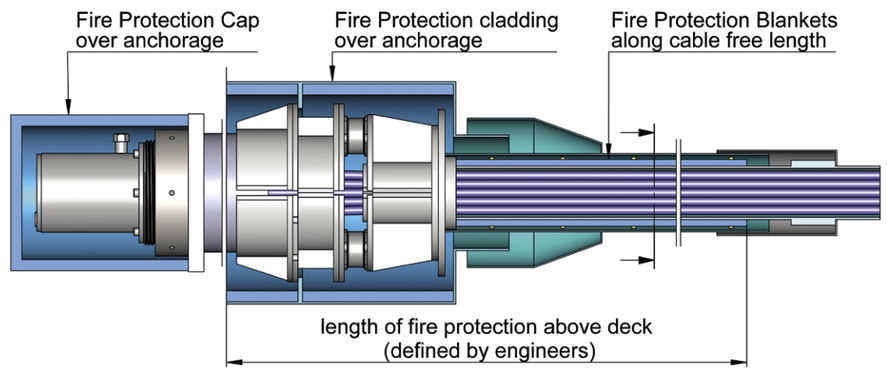

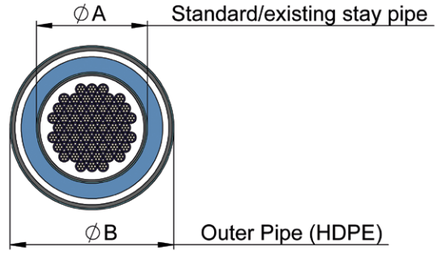

CABLE UNIT	STAY PIPE O.D.	X1 BLANKET: 45 min (3)		X2 BLANKET: 60 min (3)		X3 BLANKET: 120 min (3)	
	SSI 2000	OUTER O.D.	WEIGHT	OUTER O.D.	WEIGHT	OUTER O.D.	WEIGHT
	ØA	ØB	FP BLANKET	ØB	FP BLANKET	ØB	FP BLANKET
	[mm]	[mm]	[kg/m]	[mm]	[kg/m]	[mm]	[kg/m]
6-22 (1)	160	250	2,4	280	3,4	315	5,9
6-27	160	250	2,4	280	3,4	315	5,9
6-31	160	250	2,4	280	3,4	315	5,9
6-37	180	280	2,7	280	3,4	315	5,9
6-43	200	315	3,0	315	3,9	355	7,0
6-55	200	315	3,0	315	3,9	355	7,0
6-61	225	355	3,4	355	4,5	355	7,0
6-73	250	355	3,4	355	4,5	400	8,3
6-85	250	355	3,4	355	4,5	400	8,3
6-91	280	400	3,8	400	5,2	450	9,7
6-109	315	450	4,3	450	5,9	450	9,7
6-127	315	450	4,3	450	5,9	450	9,7
6-139 (2)	315	450	4,3	450	5,9	450	9,7

Not given dimensions are defined upon specific project requirements. Please contact VSL for detailed dimensions.

(1) Smaller units available on request
(2) Bigger units available on request
(3) Tested in accordance with UL 1709 Hydro carbon temperature time-curve and compliant with PTI DC45.1-12 – fire resistance and qualification testing

D

References

1 Decades of experiences

Kwidzyn Bridge, Poland - 2017

The longest extradosed bridge in Europe with its 808m length and 204m main spans: supply and installation of VSL SSI 2000 stay cables and VSL SSI 2000 saddles up to 75 strand unit in less than 60 days

Burgoyne Bridge, Canada - 2017

Arch bridge with 125m main span: supply and installation of VSL articulated stay cable system MSI 2000

Mersey Bridge, United Kingdom - 2017

998m long bridge with 3 pylons and 318m main span using VSL SSI 2000 system – 109 strand cables with length up to 225m and all 146 cables equipped with Friction dampers

Arrah-Chapra Bridge, India - 2017

The longest extradosed bridge in the world with its 1920m length and 120m main spans using VSL SSI 2000 Saddles

Forth Crossing Bridge, United Kingdom - 2017

2700m long bridge with 3 pylons and 650m main span using 6550ton of VSL SSI 2000 system – 109 strand cables with length up to 422m and all 288 cables equipped with Friction dampers

Zenit Arena, Russia - 2016

A new football stadium for the 2018 FIFA World Cup with a capacity of 70,000 spectators: supply and installation of VSL SSI 2000 stay cables with up to 109 strand cables supporting the 286m-diameter steel roof structure including design of the fork anchorages, technical support during fabrication and heavy lifting of the roof segments

Basholi Bridge, India - 2015

592m long bridge with 318m main span: supply and installation of VSL SSI 2000 stay cables

Chi Shi Bridge, China - 2014

Multiple-span cable-stayed bridge of 1470m length and 380m main span: supply and installation of 3250ton of 368 VSL SSI 2000 stay cables

Nguyen Van Troi – Tran Thi Ly Bridge, Vietnam - 2013

870m long bridge with 450m main span: pylon construction, supply and installation of VSL SSI 2000C system with up to 73 strand cables and Friction dampers

Torun Bridge, Poland - 2013

270m long bridge with 80m main span: supply and installation of VSL SSI 2000 stay cables

Baluarte Bridge, Mexico - 2013

Bridge deck construction, supply and installation of stay cables and dampers – 520m main span

Margaret Hunt Hill Bridge, USA - 2012

367m long bridge: supply and installation of 58 VSL SSI 2000 stay cables in 30 days

Azerkorpu Bridge, Azerbeijan - 2012

Supply and installation of VSL SSI 2000 stay cables and Rubber dampers – cables with up to 85 strands

Talavera Bridge, Spain - 2011

Supply and installation of stay cables and dampers for cables with up to 94 strands and 410m length – 318m main span

Fourth Street South Bridge Medellin, Colombia - 2011

213m long bridge with 108m main span: supply and installation of post-tensioning and VSL SSI 2000 stay cables – cables with up to 109 strand

Hodariyat Bridge, Abu Dhabi - 2011

1300m long bridge with 200m main span: bridge deck construction and engineering, supply and installation of post-tensioning and VSL SSI 2000 stay cables and VSL SSI 2000 saddles up to 109 strand unit

Mokpo Grand Bridge, South Korea - 2011

900m long bridge with 500m main span: pylon and bridge deck construction, supply and installation of VSL SSI 2000 stay cables and Friction dampers – cables with up to 73 strand cable and 227m length

She Zi Stay Cable Bridge, Taiwan - 2011

250m long bridge with 180m main span: supply and installation of VSL SSI 2000 stay cables – cables with up to 121 strands and 171m length

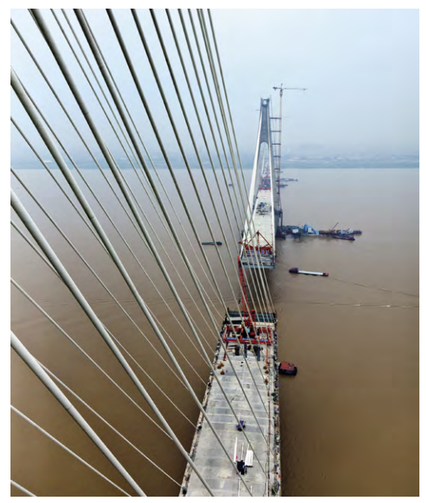

Wuhan 27 Yangtse River Bridge, China - 2011

1732m long bridge with 616m main span: supply and installation of 4287tons of VSL SSI 2000 stay cables – cables with up to 85 strands and 330m length

Catumbela Bridge, Angola - 2010

438m long bridge with 160m main span: supply and installation of post-tensioning and VSL SSI 2000 stay cables and VSL SSI 2000 saddles including pot bearings and dampers

Okhta Bridge 1, Russia - 2009

160m-span arch bridge: supply of VSL SSI 2000 stay cables and supervision at installation

Lekki-Ikoyi Bridge, Nigeria - 2009

225m long bridge with single pylon: supply and installation of VSL SSI 2000 stay cables and Rubber dampers

Industrial Ring Road, Thailand - 2005

Bridge deck construction, supply and installation of post-tensioning and stay cables – 398m main span

Neva River Bridge, Russia - 2002

Supply and installation of stay cables with Friction damper – 382m main span

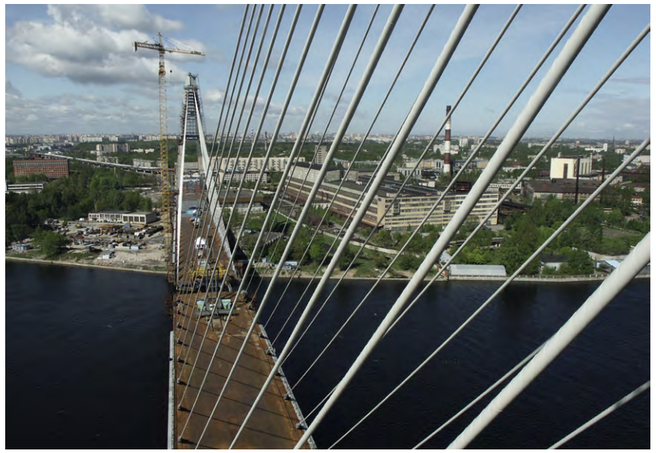

Udevalla Bridge, Sweden - 1998

Supply and installation of stay cables and first application of friction damper – 414m main span

Sunshine Skyway, USA - 1987

Supply of post-tensioning, stay cables and saddles – 366m main span

2 Complimentary VSL services for stay cable bridge construction

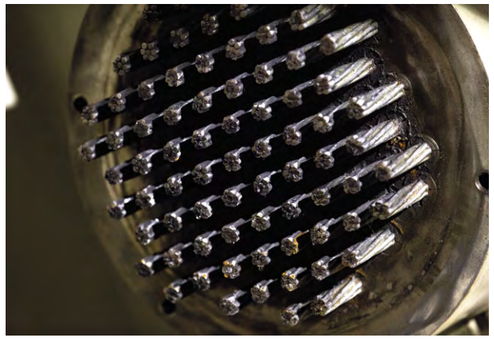

POST-TENSIONING

SPECIALIZED BRIDGE DECK CONSTRUCTION EQUIPMENT

HEAVY LIFTING

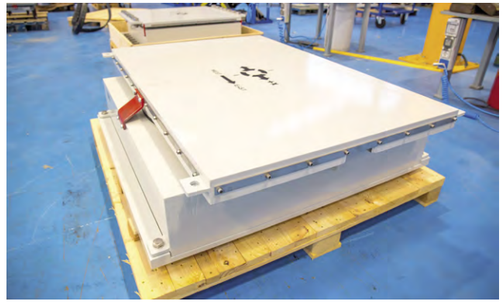

BEARINGS AND JOINTS

Copyright 12/2018, VSL International Ltd.

The information set forth in this brochure including technical and engineering data is presented for general information only. While every effort has been made to insure its accuracy, this information should not be used or relied upon for any specific application without independent professional examination and verification of its accuracy, suitability and applicability. Anyone using this material assumes any and all liability resulting from such use. VSL disclaims any and all express or implied warranties of merchantability, fitness for any general or particular purpose or freedom from infringement of any patent, trademark, or copyright in regard to the information or products contained or referred to herein. Nothing herein contained shall be construed as granting a license, express or implied under any patents.

As a specialist contractor, VSL – a member of Bouygues Construction – leverages the most advanced construction methods and technologies to engineer, build and preserve complex structures. VSL creates innovative and customised solutions, from initial engineering to project execution, to rise to its clients' challenges.

A member of
Bouygues Construction

Keep in touch with VSL on vsl.com and VSL International Ltd.

PROYEK AKHIR – VC191845

LAMPIRAN GAMBAR (SHOP DRAWING)

PERENCANAAN ULANG STRUKTUR JEMBATAN UMBUL KAJI KAB.MALANG STA 13+805 DENGAN STRUKTUR CABLE-STAYED

AULIA ULUL ABSHOR

NRP. 10111610013002

DOSEN PEMBIMBING :

Ir. IBNU PUDJI RAHARDJO, MS.

NIP. 19600105 198603 1 003

DOSEN PEMBIMBING :

Ir. CHOMAEDHI, CES, Geo.

NIP. 19550319 198403 1 001

PROGRAM SARJANA TERAPAN

DEPARTEMEN TEKNIK INFRASTRUKTUR SIPIL

FAKULTAS VOKASI

INSTITUT TEKNOLOGI SEPULUH NOPEMBER

SURABAYA

2020

DAFTAR GAMBAR

JUDUL	KODE	NOMOR
• JEMBATAN EKSISTING DAN JEMBATAN *CABLE-STAYED*	ARS	1
• TAMPAK MEMANJANG DAN TAMPAK ATAS	ARS	2
• TAMPAK MELINTANG	ARS	3
• LANTAI KENDARAAN	STR	4
• DETAIL LANTAI KENDARAAN	STR	5
• PENULANGAN LANTAI KENDARAAN	STR	6
• SAMBUNGAN GELAGAR MEMANJANG	STR	7
• SAMBUNGAN GELAGAR MELINTANG	STR	8
• SAMBUNGAN BOX GIRDER	STR	9
• PENULANGAN PYLON	STR	10
• SAMBUNGAN PYLON	STR	11
• ANGKUR PADA PYLON	STR	12
• ANGKUR PADA BOX	STR	13-14
• DETAIL STRESSING ANGKUR	STR	15-17
• DETAIL FIXED ANGKUR	STR	18-20
• PENULANGAN PILE CAP A1	STR	21
• PENULANGAN ABUTMENT A1	STR	22
• PENULANGAN PILE CAP A2 DAN ABUTMENT A2	STR	23
• DETAIL POT BEARING	STR	24

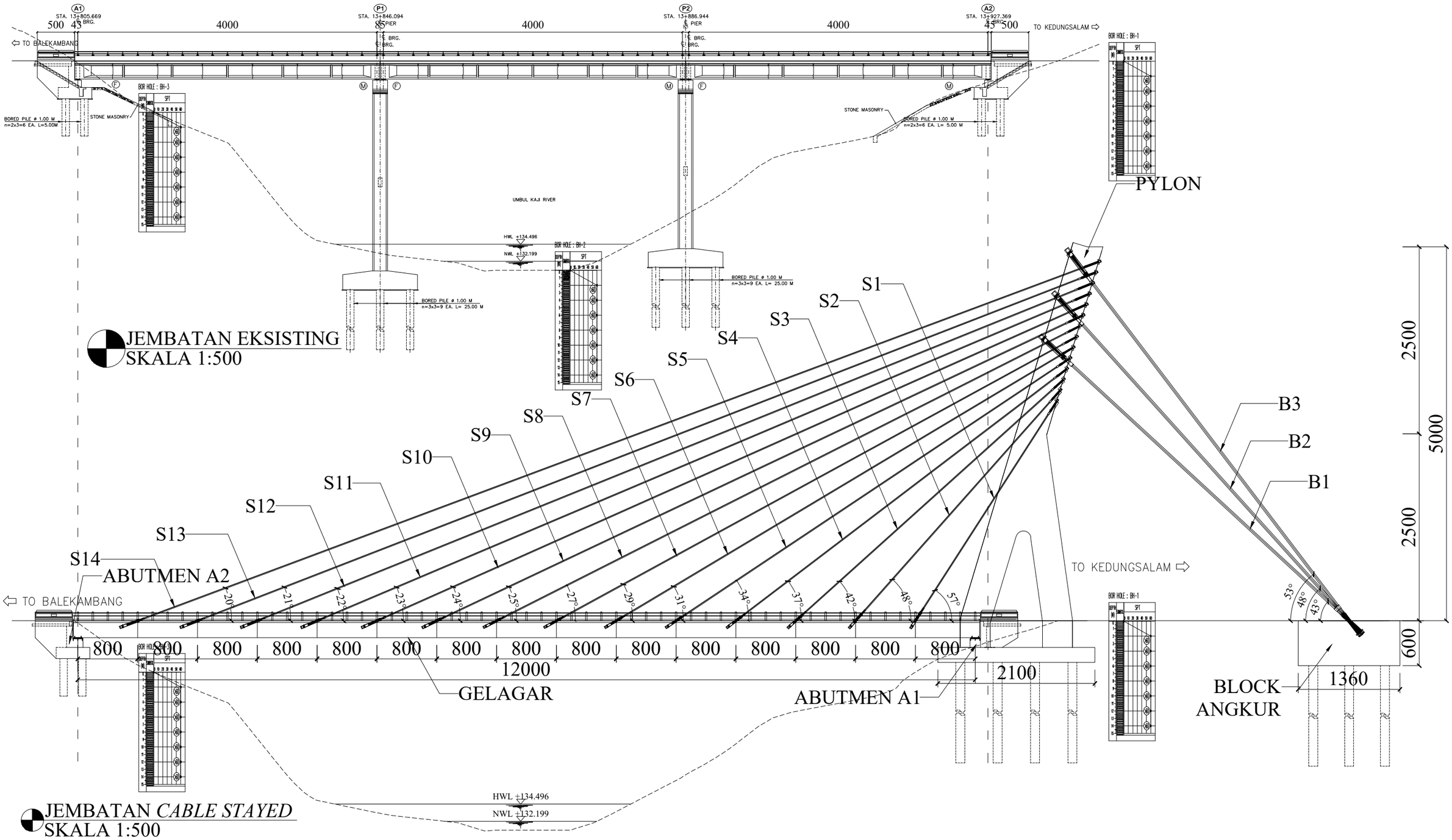

	JUDUL TUGAS AKHIR	JUDUL GAMBAR	SKALA	DOSEN PEMBIMBING	MAHASISWA	KODE GBR	NO GBR
DEPARTEMEN TEKNIK INFRASTRUKTUR SIPIL FAKULTAS VOKASI INSTITUT TEKNOLOGI SEPULUH NOPEMBER	"PERENCANAAN ULANG STRUKTUR JEMBATAN UMBUL KAJI KAB.MALANG STA 13+805 DENGAN STRUKTUR *CABLE-STAYED*"	TAMPAK MEMANJANG JEMBATAN EKSISTING DAN JEMBATAN *CABLE STAYED*	1:500	Ir. IBNU PUDJI R, MS NIP. 19600105 198603 1 003 Ir. CHOMAEDHI, CES.Geo NIP. 19550319 198403 1 001	AULIA ULUL ABSHOR NRP. 10111610013002	ARS	1

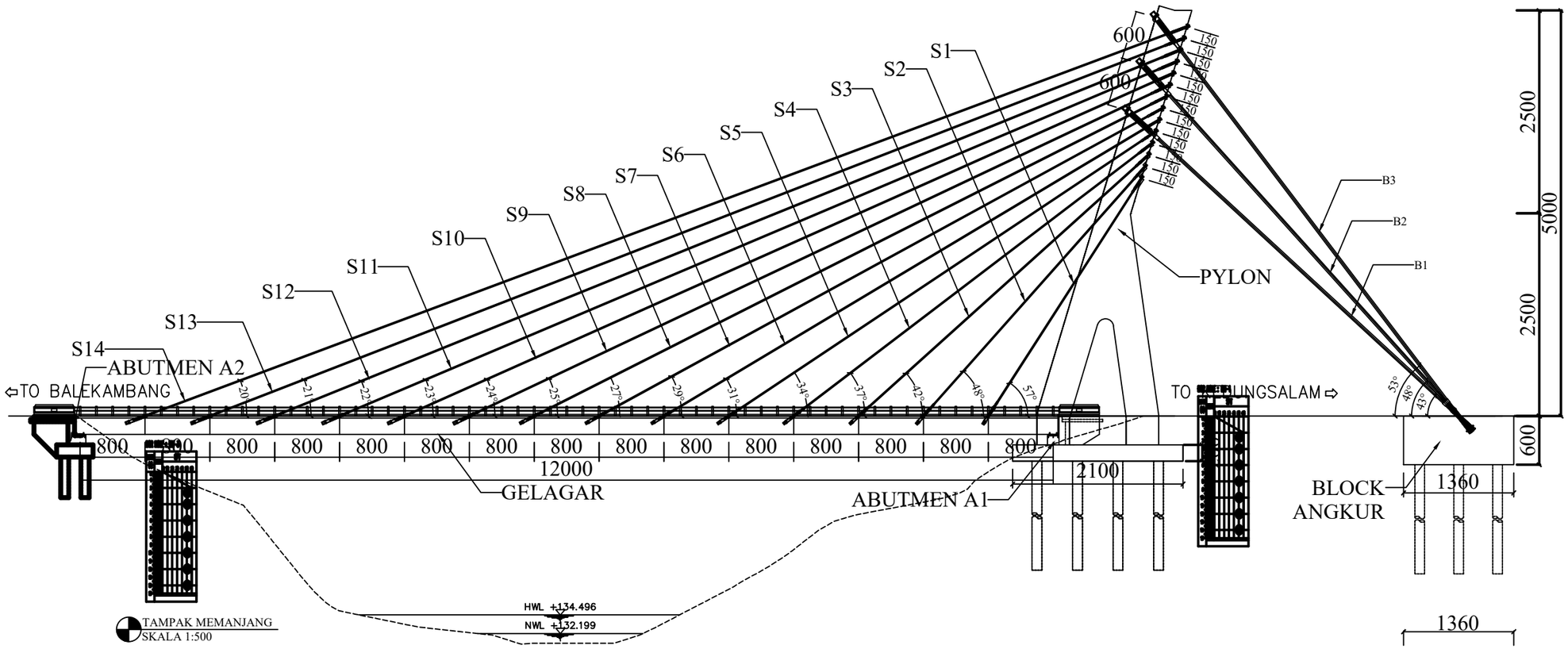

TAMPAK MEMANJANG
SKALA 1:500

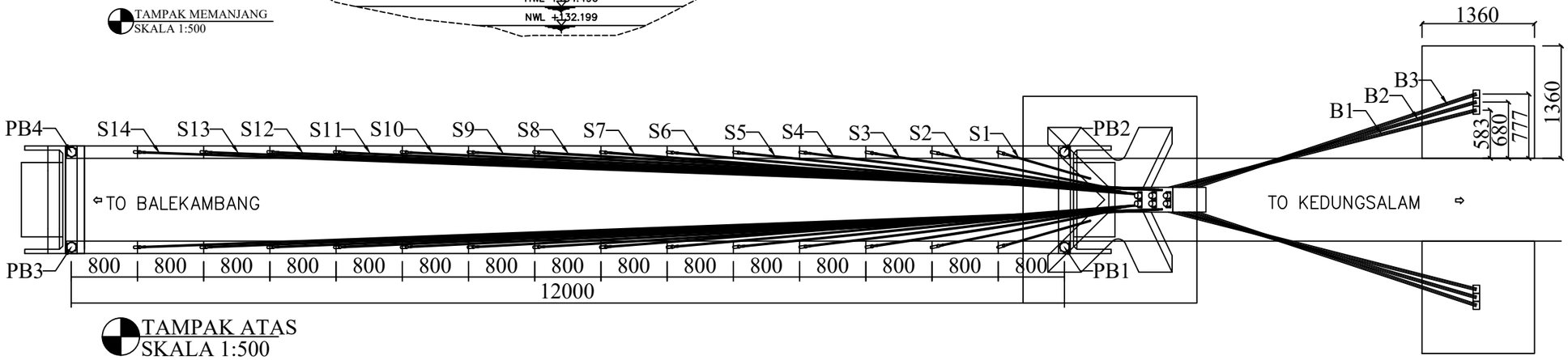

TAMPAK ATAS
SKALA 1:500

	JUDUL TUGAS AKHIR	JUDUL GAMBAR	SKALA	DOSEN PEMBIMBING	MAHASISWA	KODE GBR	NO GBR
DEPARTEMEN TEKNIK INFRASTRUKTUR SIPIL FAKULTAS VOKASI INSTITUT TEKNOLOGI SEPULUH NOPEMBER	"PERENCANAAN ULANG STRUKTUR JEMBATAN UMBUL KAJI KAB.MALANG STA 13+805 DENGAN STRUKTUR *CABLE-STAYED*"	TAMPAK MEMANJANG TAMPAK ATAS	1:500	Ir. IBNU PUDJI R, MS NIP. 19600105 198603 1 003 Ir. CHOMAEDHI, CES.Geo NIP. 19550319 198403 1 001	AULIA ULUL ABSHOR NRP. 10111610013002	ARS	2

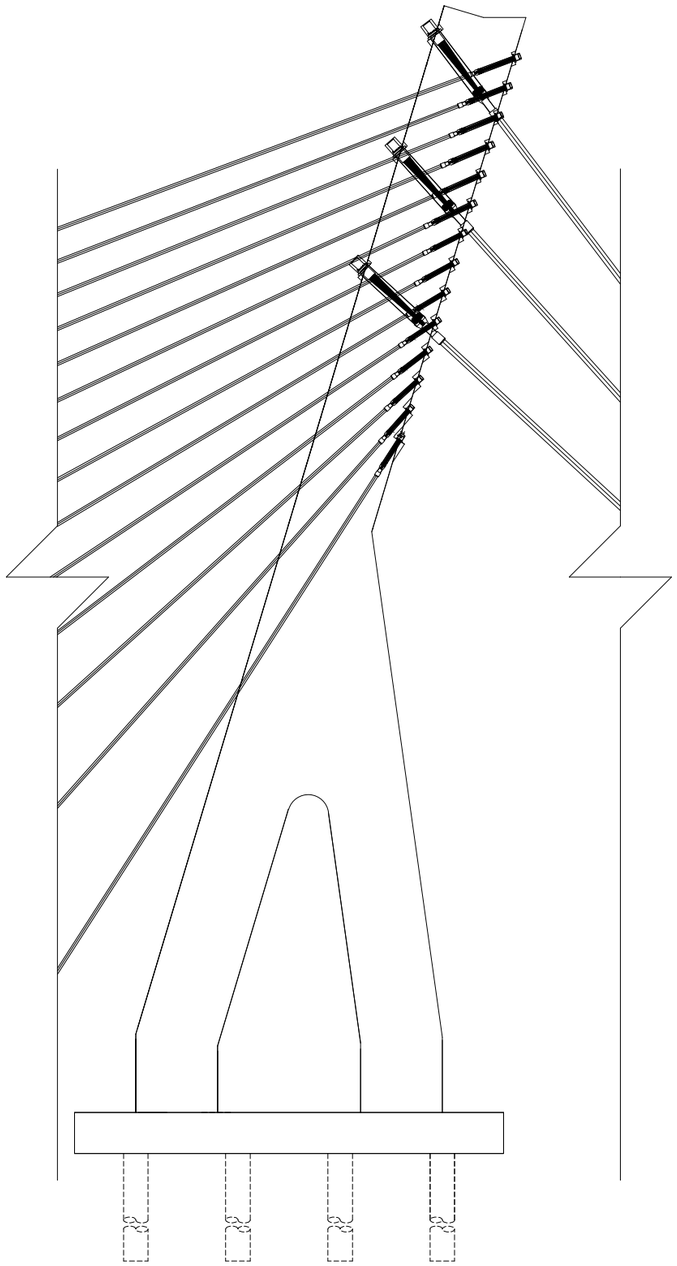

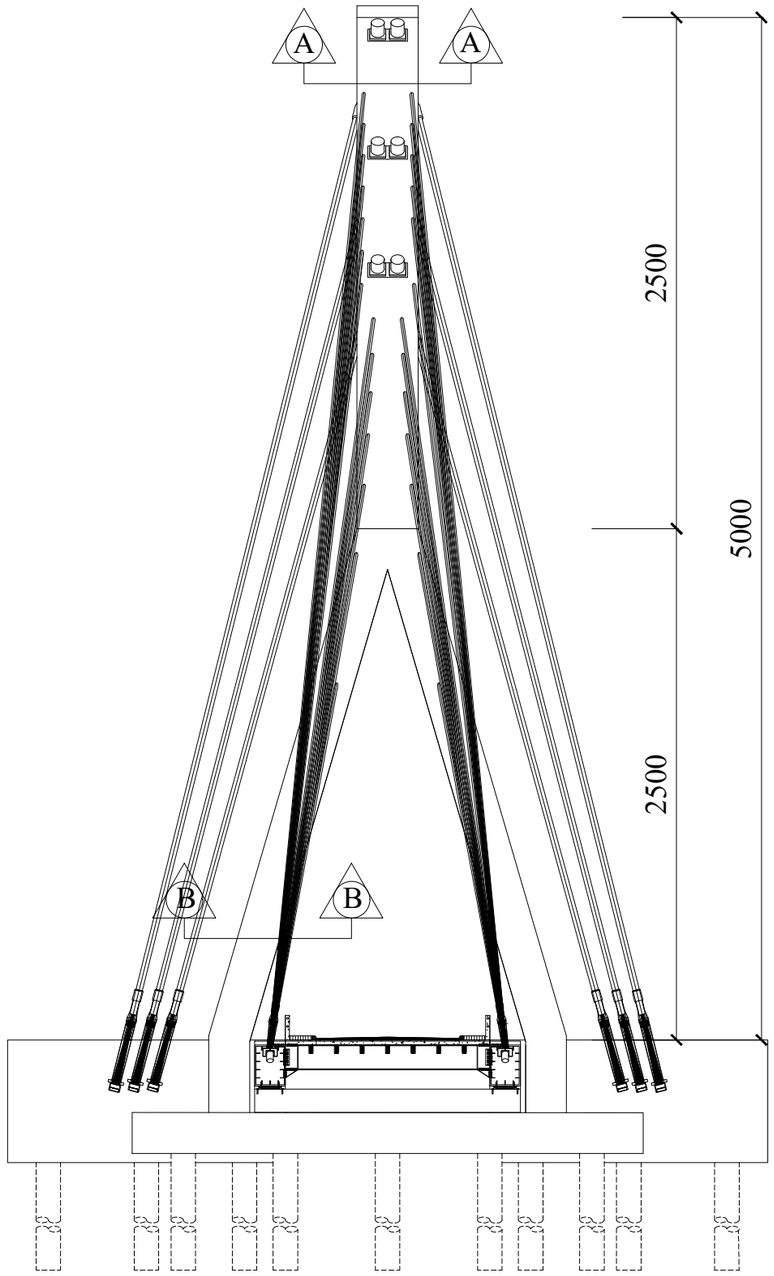

TAMPAK MELINTANG
SKALA 1:300

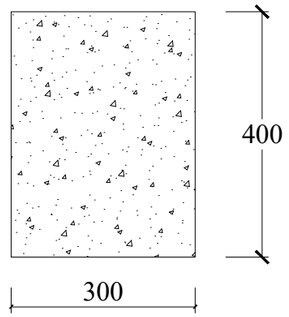

POT A-A
SKALA 1:100

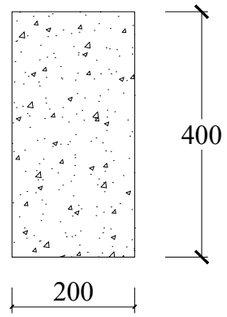

POT B-B
SKALA 1:100

	JUDUL TUGAS AKHIR	JUDUL GAMBAR	SKALA	DOSEN PEMBIMBING	MAHASISWA	KODE GBR	NO GBR
DEPARTEMEN TEKNIK INFRASTRUKTUR SIPIL FAKULTAS VOKASI INSTITUT TEKNOLOGI SEPULUH NOPEMBER	"PERENCANAAN ULANG STRUKTUR JEMBATAN UMBUL KAJI KAB.MALANG STA 13+805 DENGAN STRUKTUR *CABLE-STAYED"*	TAMPAK MELINTANG	1:300	Ir. IBNU PUDJI R, MS NIP. 19600105 198603 1 003 Ir. CHOMAEDHI, CES.Geo NIP. 19550319 198403 1 001	AULIA ULUL ABSHOR NRP. 10111610013002	ARS	3

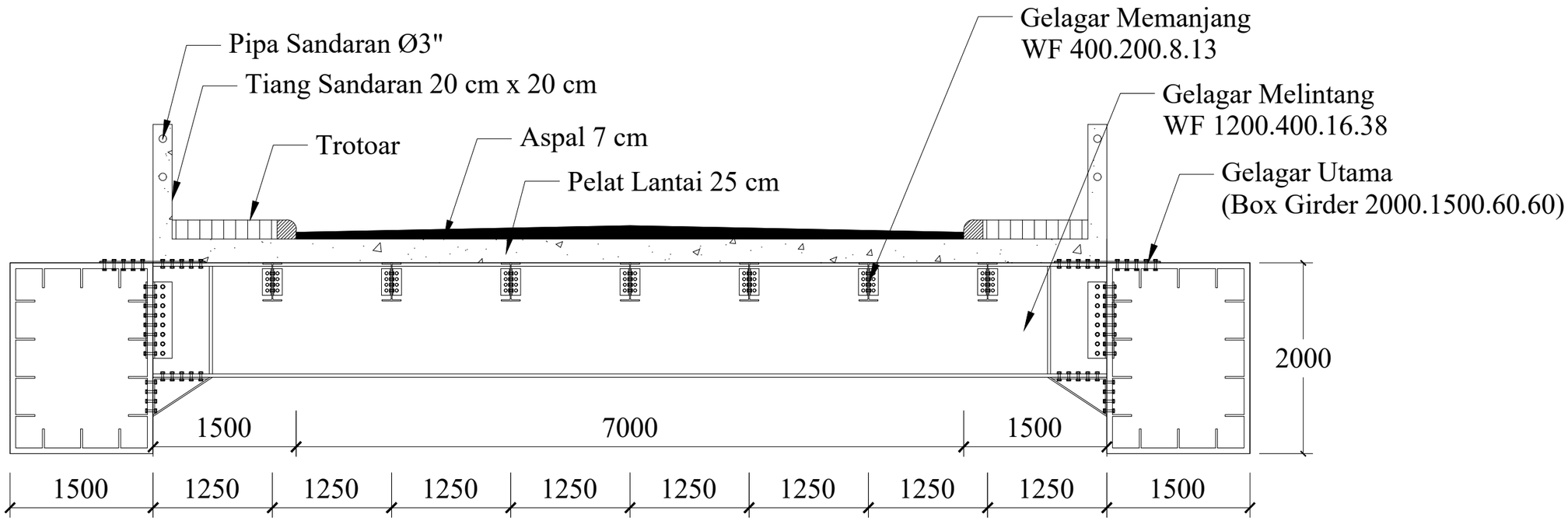

LANTAI KENDARAAN
SKALA 1:50

	JUDUL TUGAS AKHIR	JUDUL GAMBAR	SKALA	DOSEN PEMBIMBING	MAHASISWA	KODE GBR	NO GBR
DEPARTEMEN TEKNIK INFRASTRUKTUR SIPIL FAKULTAS VOKASI INSTITUT TEKNOLOGI SEPULUH NOPEMBER	"PERENCANAAN ULANG STRUKTUR JEMBATAN UMBUL KAJI KAB.MALANG STA 13+805 DENGAN STRUKTUR *CABLE-STAYED"*	LANTAI KENDARAAN	1:50	Ir. IBNU PUDJI R, MS NIP. 19600105 198603 1 003 Ir. CHOMAEDHI, CES.Geo NIP. 19550319 198403 1 001	AULIA ULUL ABSHOR NRP. 10111610013002	STR	4

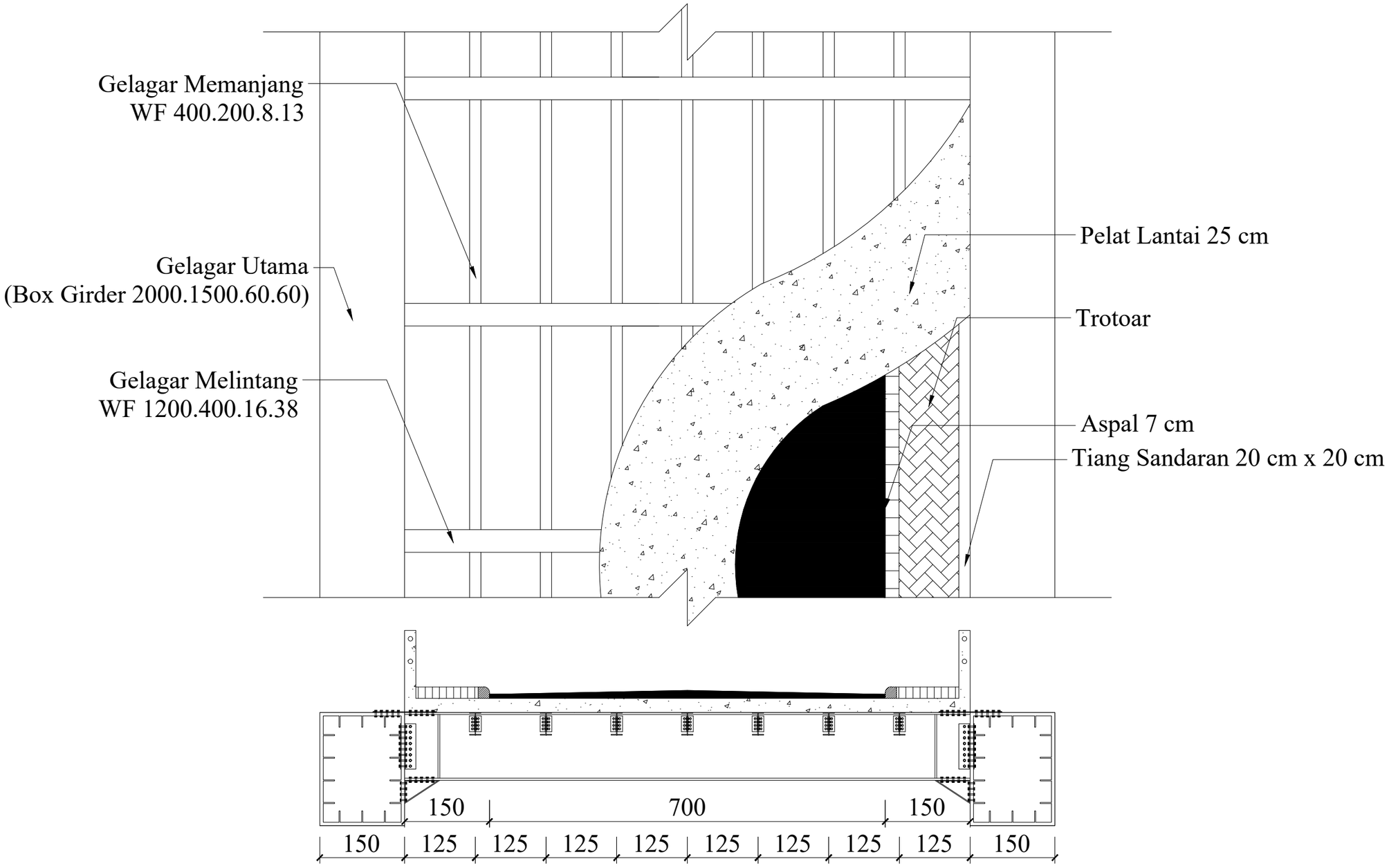

DETAIL LANTAI KENDARAAN
SKALA 1:75

	JUDUL TUGAS AKHIR	JUDUL GAMBAR	SKALA	DOSEN PEMBIMBING	MAHASISWA	KODE GBR	NO GBR
DEPARTEMEN TEKNIK INFRASTRUKTUR SIPIL FAKULTAS VOKASI INSTITUT TEKNOLOGI SEPULUH NOPEMBER	"PERENCANAAN ULANG STRUKTUR JEMBATAN UMBUL KAJI KAB.MALANG STA 13+805 DENGAN STRUKTUR *CABLE-STAYED*"	DETAIL LANTAI KENDARAAN	1:75	Ir. IBNU PUDJI R, MS NIP. 19600105 198603 1 003 Ir. CHOMAEDHI, CES.Geo NIP. 19550319 198403 1 001	AULIA ULUL ABSHOR NRP. 10111610013002	STR	5

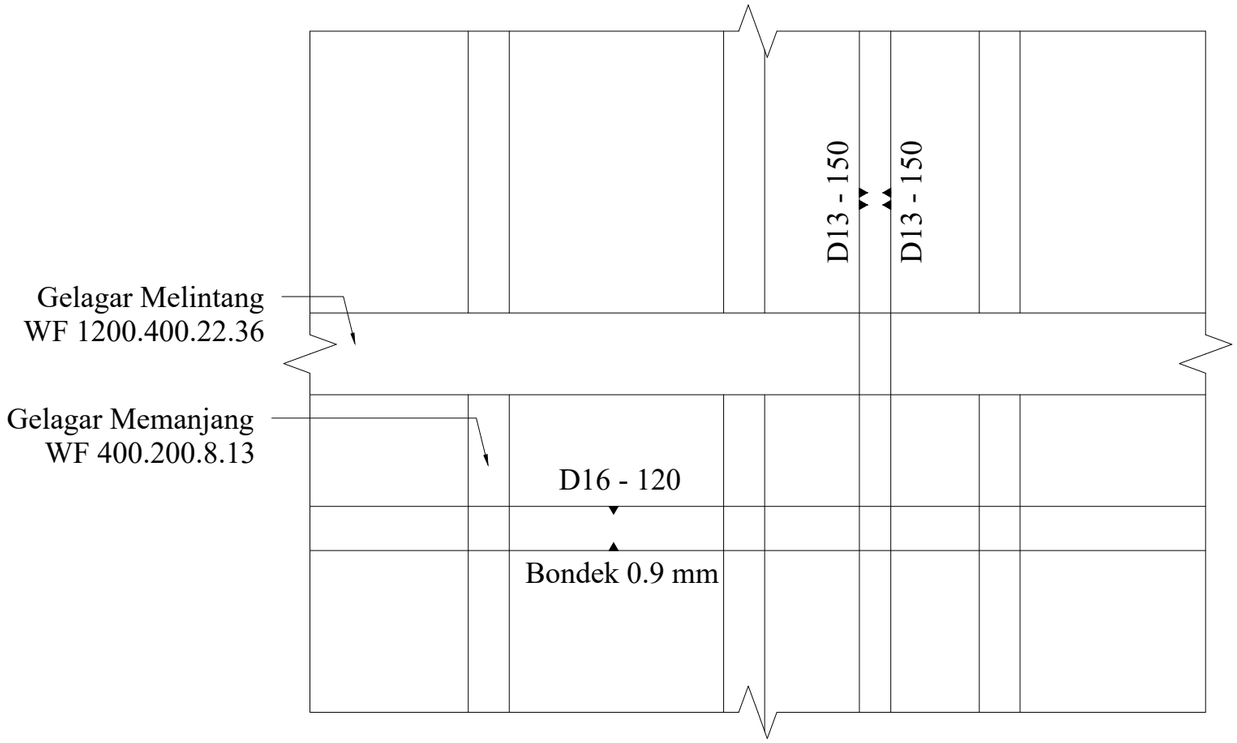

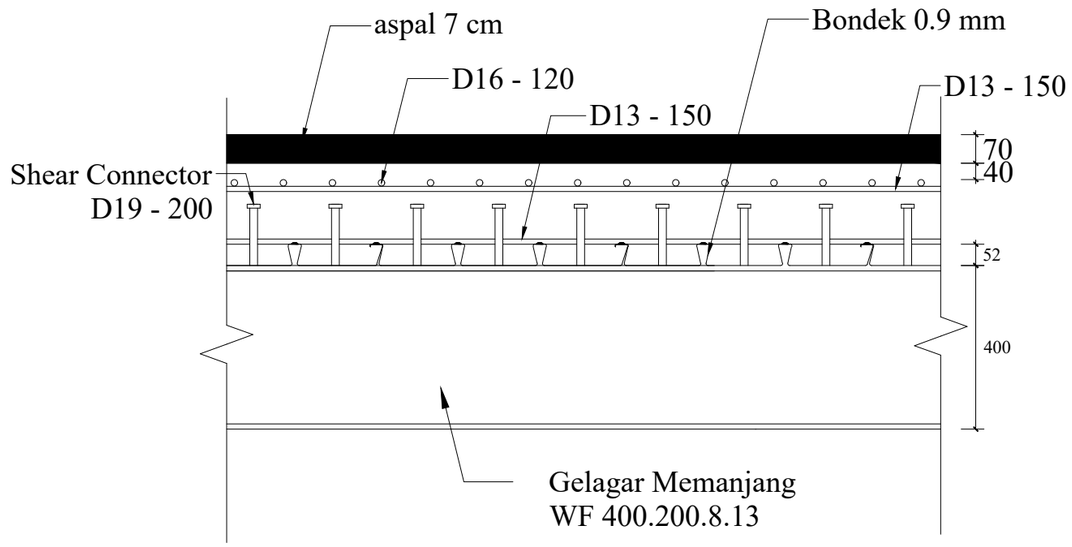

DETAIL A
SKALA 1:15

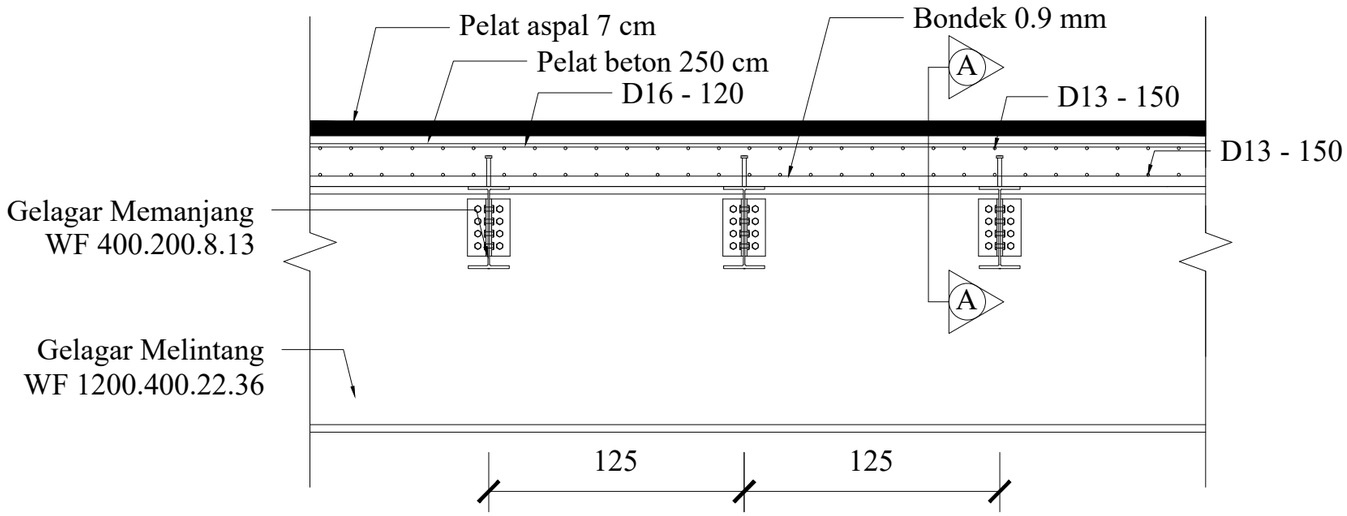

PENULANGAN LANTAI KENDARAAN
SKALA 1:30

	JUDUL TUGAS AKHIR	JUDUL GAMBAR	SKALA	DOSEN PEMBIMBING	MAHASISWA	KODE GBR	NO GBR
DEPARTEMEN TEKNIK INFRASTRUKTUR SIPIL FAKULTAS VOKASI INSTITUT TEKNOLOGI SEPULUH NOPEMBER	"PERENCANAAN ULANG STRUKTUR JEMBATAN UMBUL KAJI KAB.MALANG STA 13+805 DENGAN STRUKTUR *CABLE-STAYED*"	-PENULANGAN LANTAI KENDARAAN -DETAIL A	1:30 1:15	Ir. IBNU PUDJI R, MS NIP. 19600105 198603 1 003 Ir. CHOMAEDHI, CES.Geo NIP. 19550319 198403 1 001	AULIA ULUL ABSHOR NRP. 10111610013002	STR	6

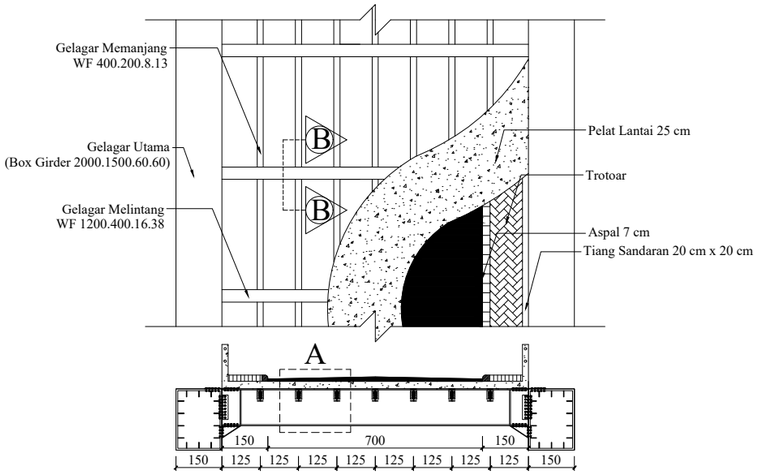

KEYPLAN

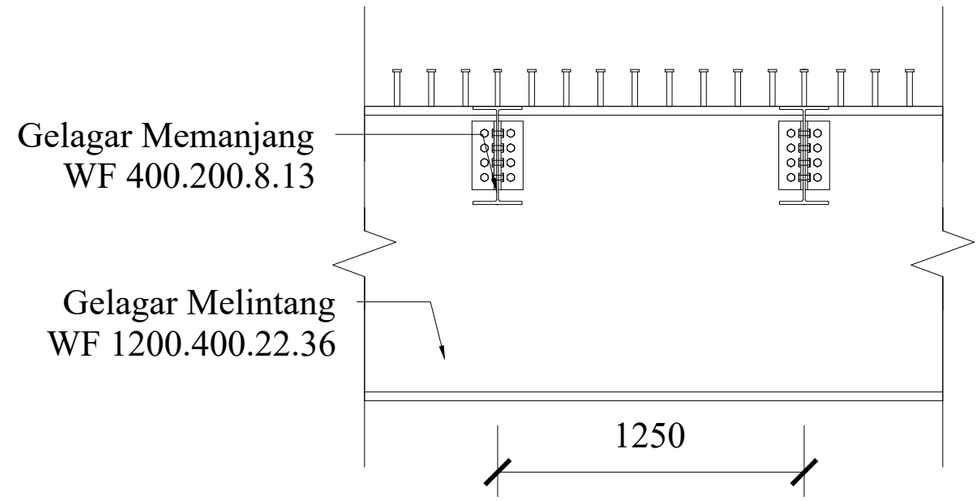

DETAIL A
SKALA 1:25

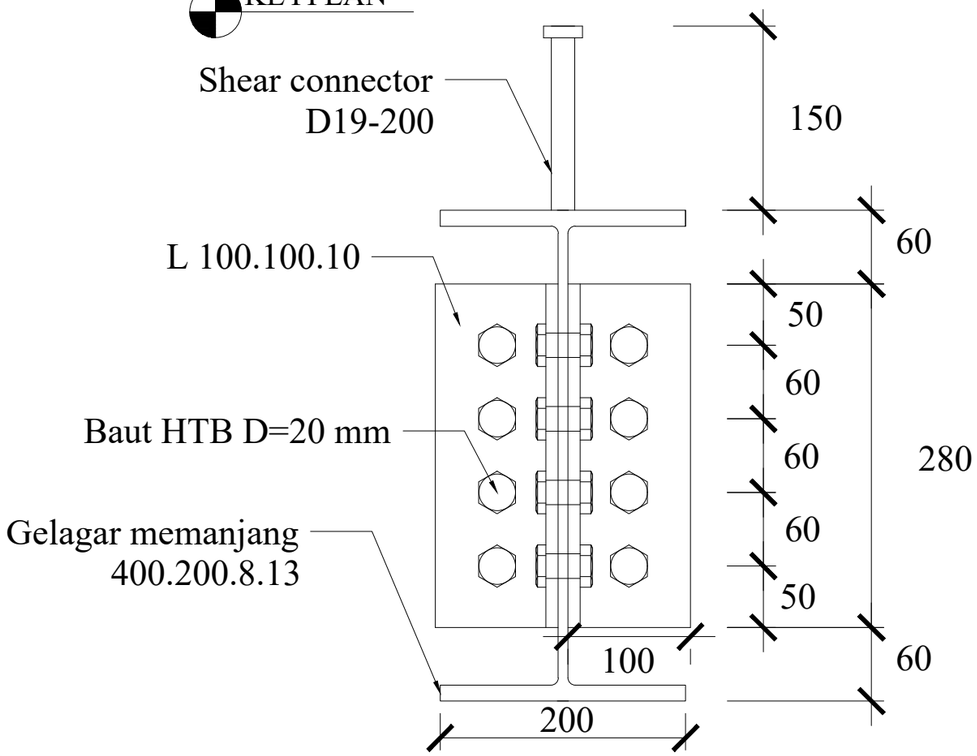

SAMBUNGAN GELAGAR MEMANJANG
SKALA 1:5

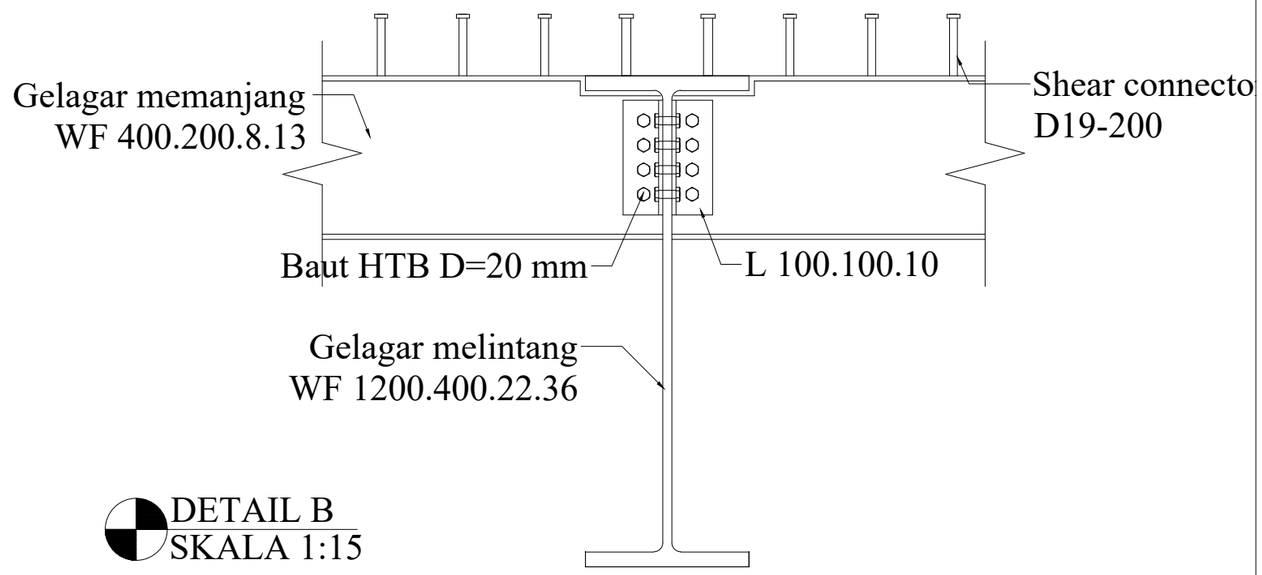

DETAIL B
SKALA 1:15

	JUDUL TUGAS AKHIR	JUDUL GAMBAR	SKALA	DOSEN PEMBIMBING	MAHASISWA	KODE GBR	NO GBR
DEPARTEMEN TEKNIK INFRASTRUKTUR SIPIL FAKULTAS VOKASI INSTITUT TEKNOLOGI SEPULUH NOPEMBER	"PERENCANAAN ULANG STRUKTUR JEMBATAN UMBUL KAJI KAB.MALANG STA 13+805 DENGAN STRUKTUR *CABLE-STAYED*"	-SAMBUNGAN GELAGAR MEMANJANG -DETAIL A -DETAIL B	1:5 1:25 1:15	Ir. IBNU PUDJI R, MS NIP. 19600105 198603 1 003 Ir. CHOMAEDHI, CES.Geo NIP. 19550319 198403 1 001	AULIA ULUL ABSHOR NRP. 10111610013002	STR	7

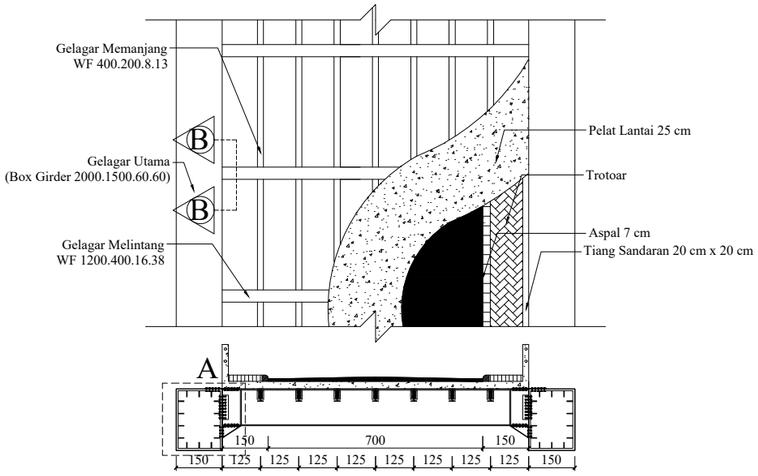

KEYPLAN

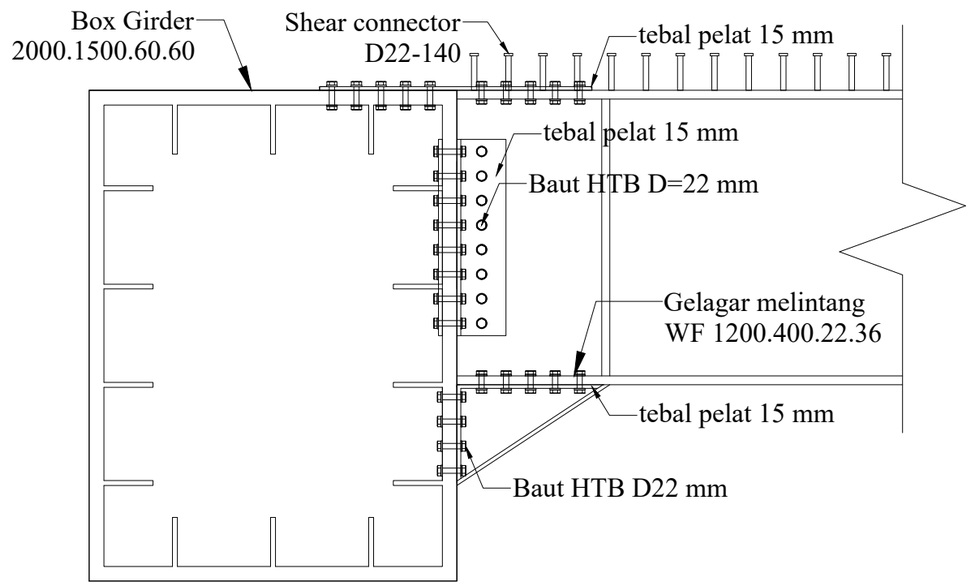

DETAIL A
SKALA 1:25

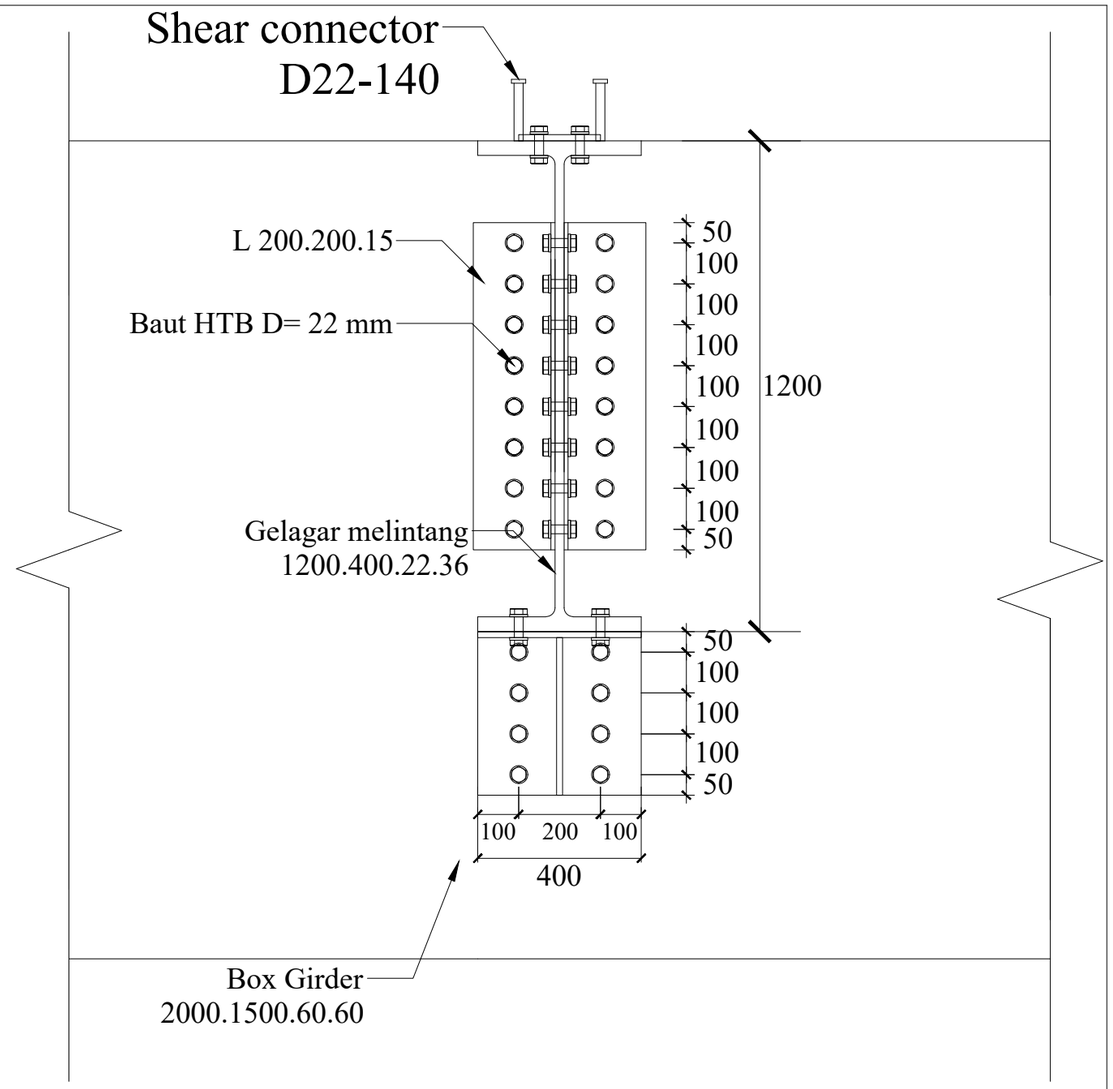

DETAIL B
SKALA 1:15

	JUDUL TUGAS AKHIR	JUDUL GAMBAR	SKALA	DOSEN PEMBIMBING	MAHASISWA	KODE GBR	NO GBR
DEPARTEMEN TEKNIK INFRASTRUKTUR SIPIL FAKULTAS VOKASI INSTITUT TEKNOLOGI SEPULUH NOPEMBER	"PERENCANAAN ULANG STRUKTUR JEMBATAN UMBUL KAJI KAB.MALANG STA 13+805 DENGAN STRUKTUR *CABLE-STAYED*"	DETAIL SAMBUNGAN GELAGAR MELINTANG -DETAIL A -DETAIL B	1:25 1:15	Ir. IBNU PUDJI R, MS NIP. 19600105 198603 1 003 Ir. CHOMAEDHI, CES.Geo NIP. 19550319 198403 1 001	AULIA ULUL ABSHOR NRP. 10111610013002	STR	8

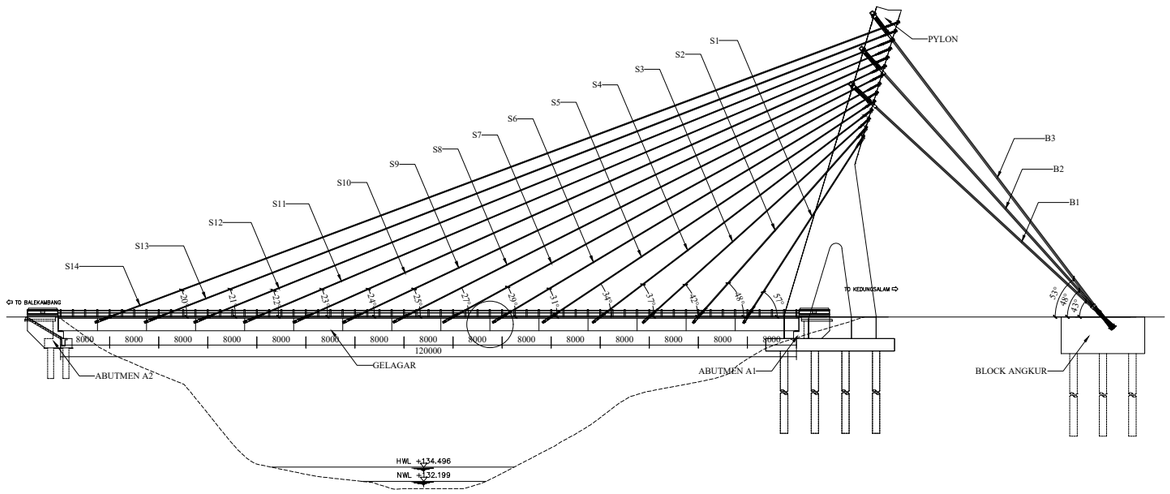

KEYPLAN

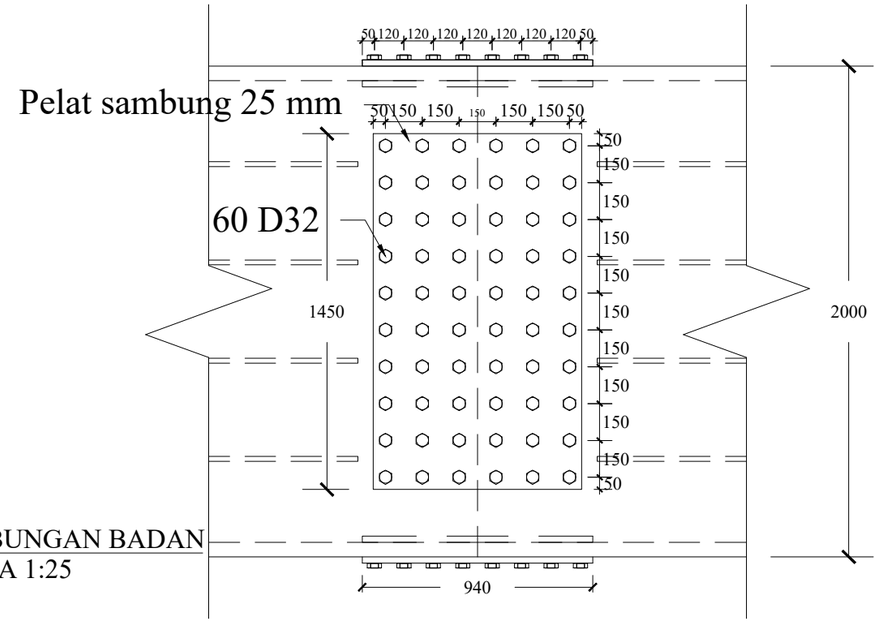

SAMBUNGAN BADAN
SKALA 1:25

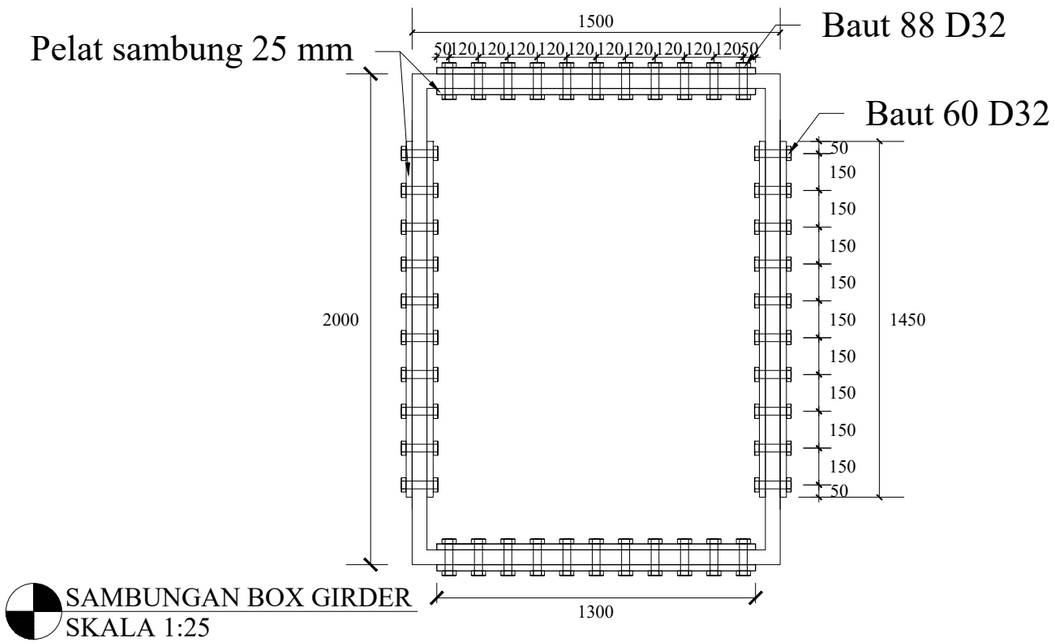

SAMBUNGAN BOX GIRDER
SKALA 1:25

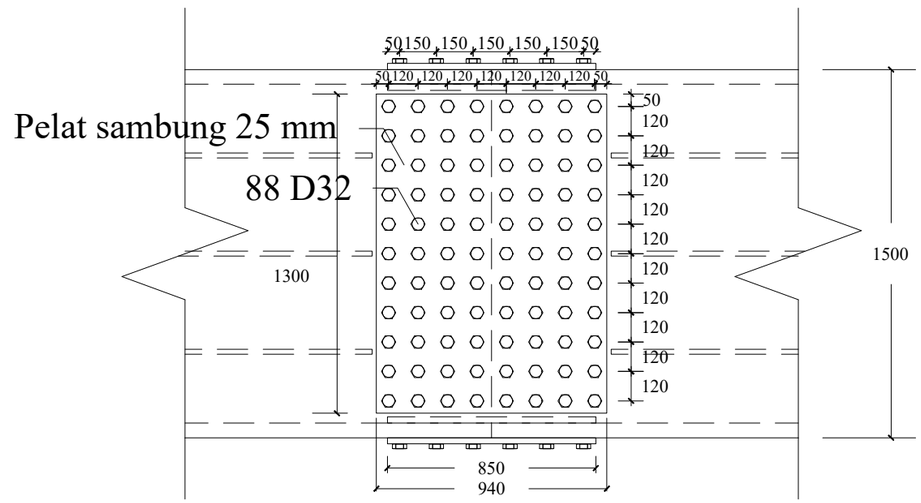

SAMBUNGAN SAYAP
SKALA 1:25

	JUDUL TUGAS AKHIR	JUDUL GAMBAR	SKALA	DOSEN PEMBIMBING	MAHASISWA	KODE GBR	NO GBR
DEPARTEMEN TEKNIK INFRASTRUKTUR SIPIL FAKULTAS VOKASI INSTITUT TEKNOLOGI SEPULUH NOPEMBER	"PERENCANAAN ULANG STRUKTUR JEMBATAN UMBUL KAJI KAB.MALANG STA 13+805 DENGAN STRUKTUR *CABLE-STAYED*"	-SAMBUNGAN BOX GIRDER -SAMBUNGAN BADAN -SAMBUNGAN SAYAP	1:25 1:25 1:25	Ir. IBNU PUDJI R, MS NIP. 19600105 198603 1 003 Ir. CHOMAEDHI, CES.Geo NIP. 19550319 198403 1 001	AULIA ULUL ABSHOR NRP. 10111610013002	STR	9

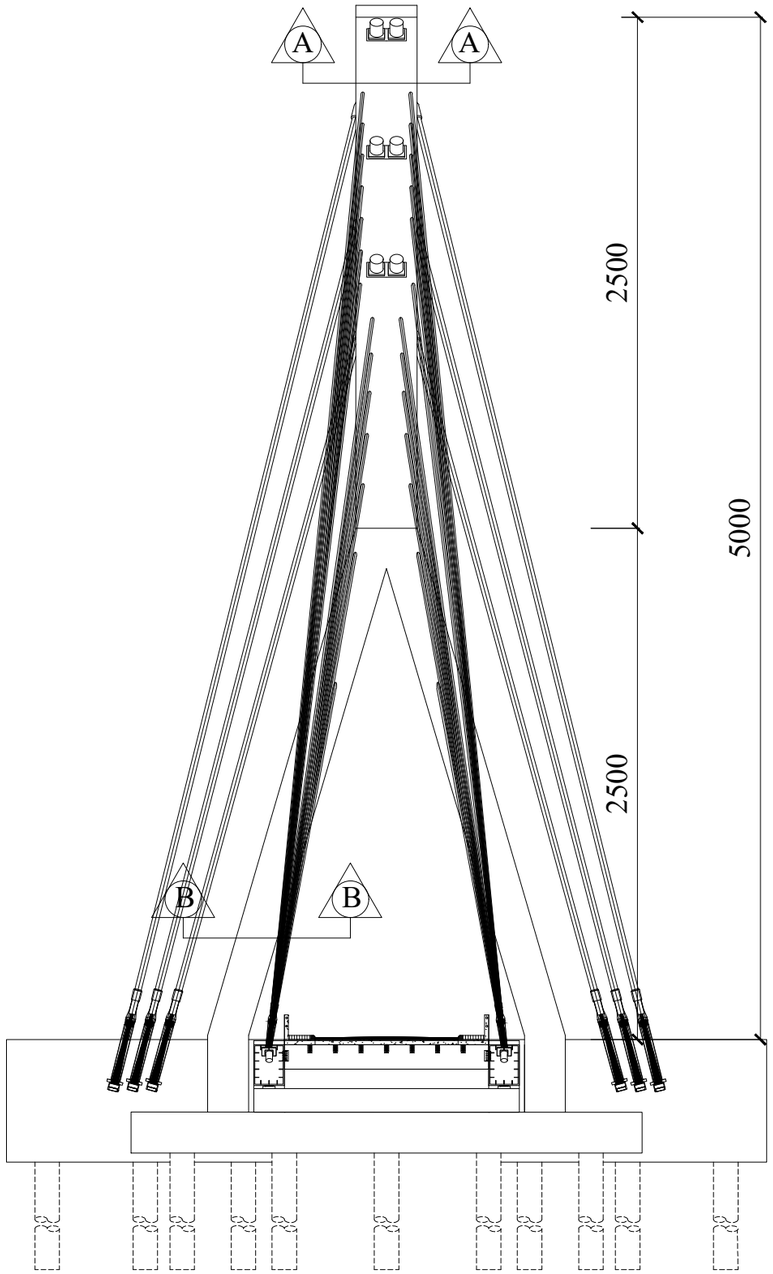

KEYPLAN

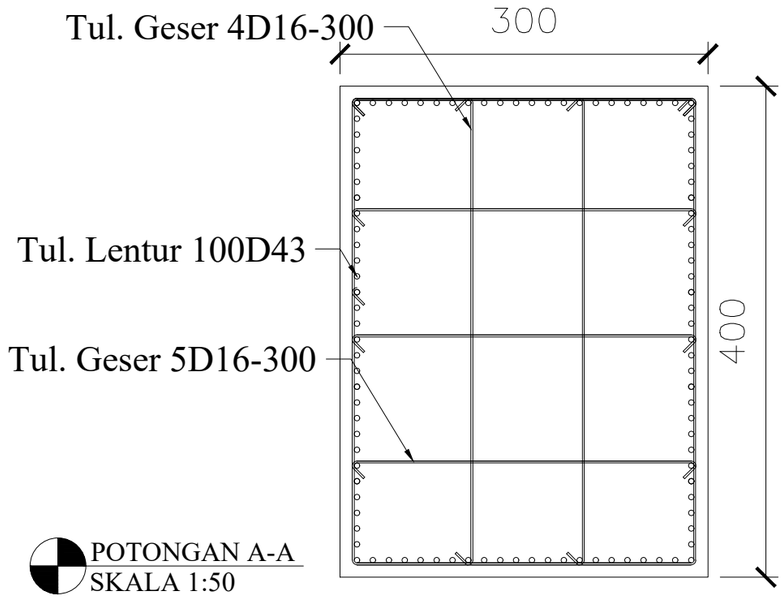

POTONGAN A-A
SKALA 1:50

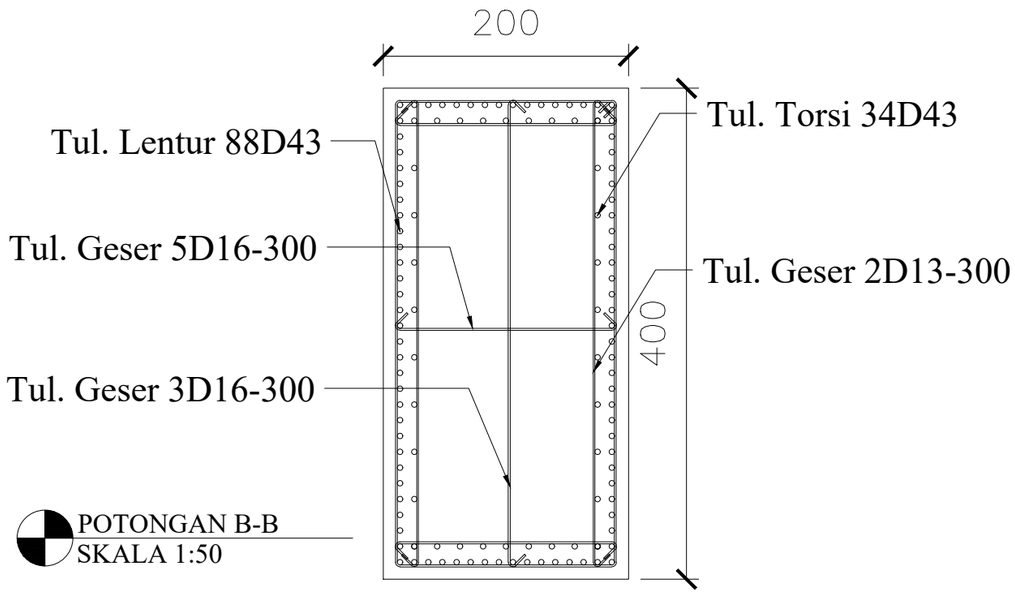

POTONGAN B-B
SKALA 1:50

	JUDUL TUGAS AKHIR	JUDUL GAMBAR	SKALA	DOSEN PEMBIMBING	MAHASISWA	KODE GBR	NO GBR
DEPARTEMEN TEKNIK INFRASTRUKTUR SIPIL FAKULTAS VOKASI INSTITUT TEKNOLOGI SEPULUH NOPEMBER	"PERENCANAAN ULANG STRUKTUR JEMBATAN UMBUL KAJI KAB.MALANG STA 13+805 DENGAN STRUKTUR *CABLE-STAYED*"	PENULANGAN PYLON	1:50	Ir. IBNU PUDJI R, MS NIP. 19600105 198603 1 003 Ir. CHOMAEDHI, CES.Geo NIP. 19550319 198403 1 001	AULIA ULUL ABSHOR NRP. 10111610013002	STR	10

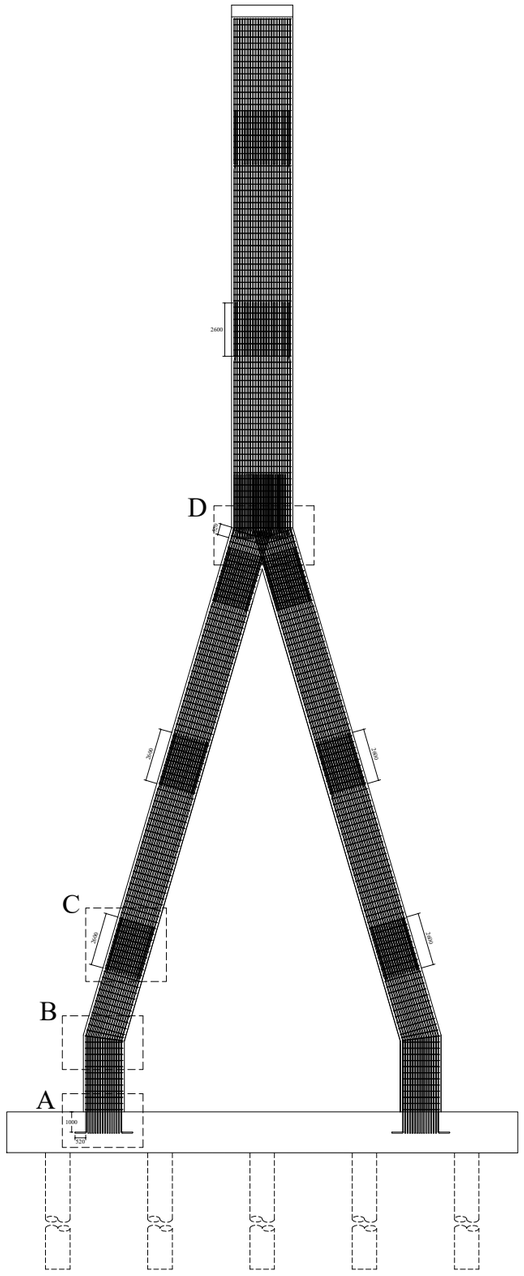

KEYPLAN

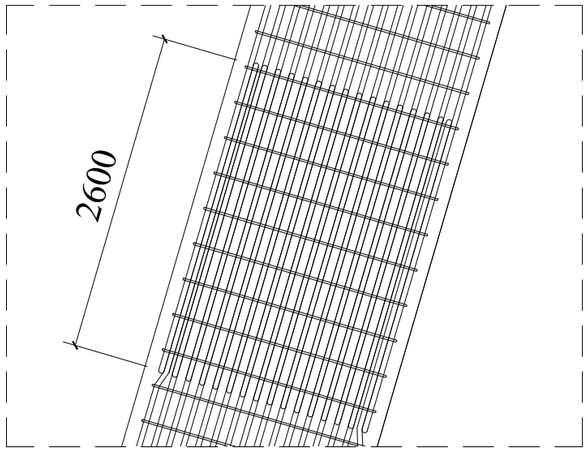

DETAIL C
SKALA 1:50

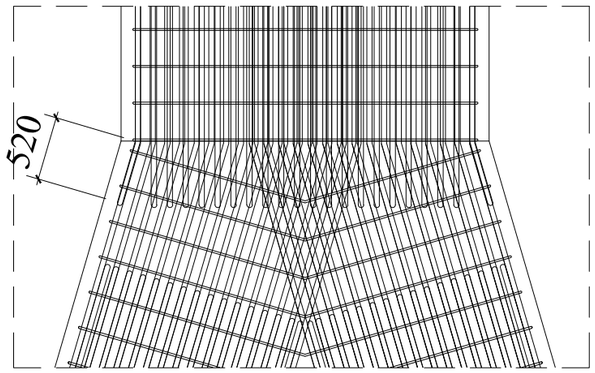

DETAIL D
SKALA 1:50

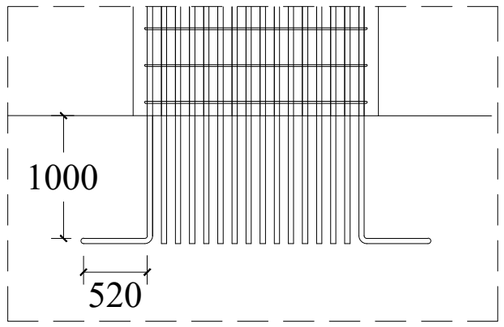

DETAIL A
SKALA 1:50

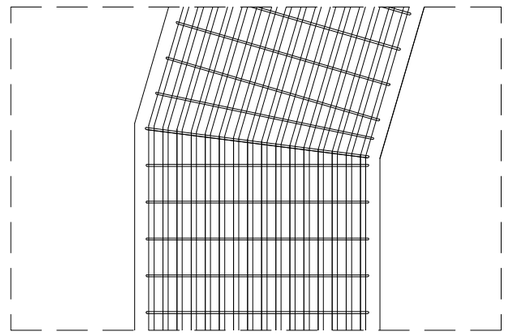

DETAIL B
SKALA 1:50

	JUDUL TUGAS AKHIR	JUDUL GAMBAR	SKALA	DOSEN PEMBIMBING	MAHASISWA	KODE GBR	NO GBR
DEPARTEMEN TEKNIK INFRASTRUKTUR SIPIL FAKULTAS VOKASI INSTITUT TEKNOLOGI SEPULUH NOPEMBER	"PERENCANAAN ULANG STRUKTUR JEMBATAN UMBUL KAJI KAB.MALANG STA 13+805 DENGAN STRUKTUR *CABLE-STAYED"*	SAMBUNGAN PADA PYLON	1:50	Ir. IBNU PUDJI R, MS NIP. 19600105 198603 1 003 Ir. CHOMAEDHI, CES.Geo NIP. 19550319 198403 1 001	AULIA ULUL ABSHOR NRP. 10111610013002	STR	11

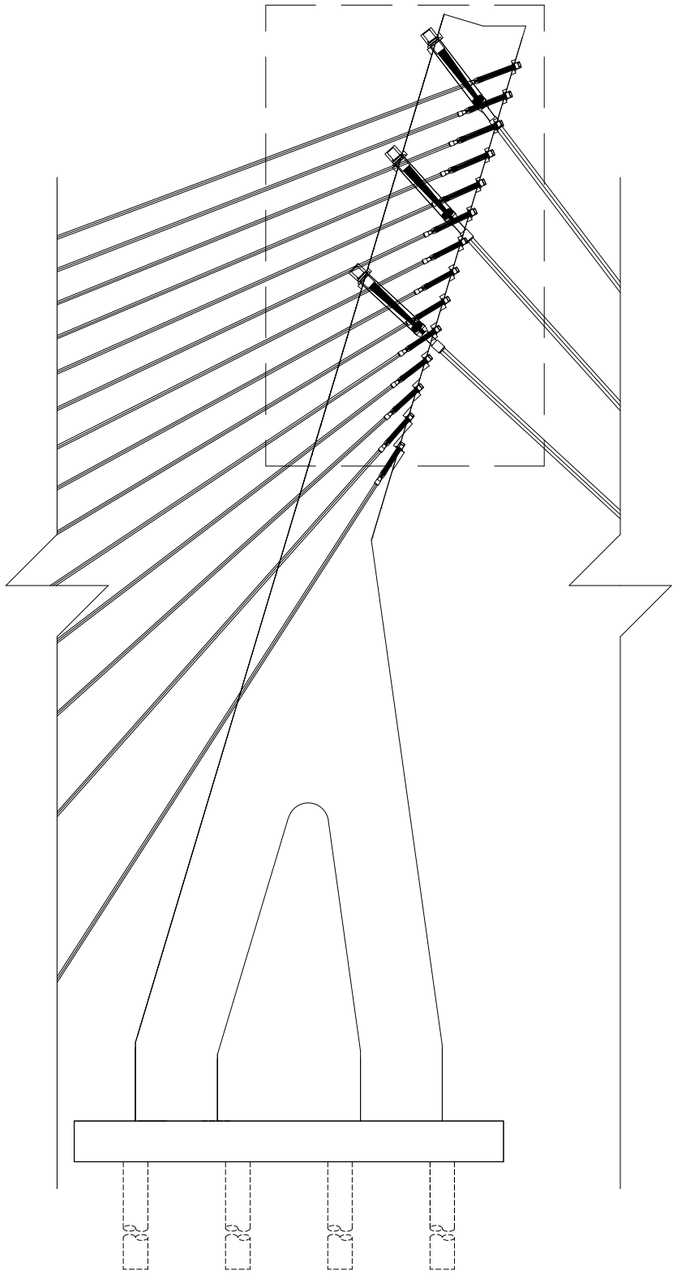

KEYPLAN

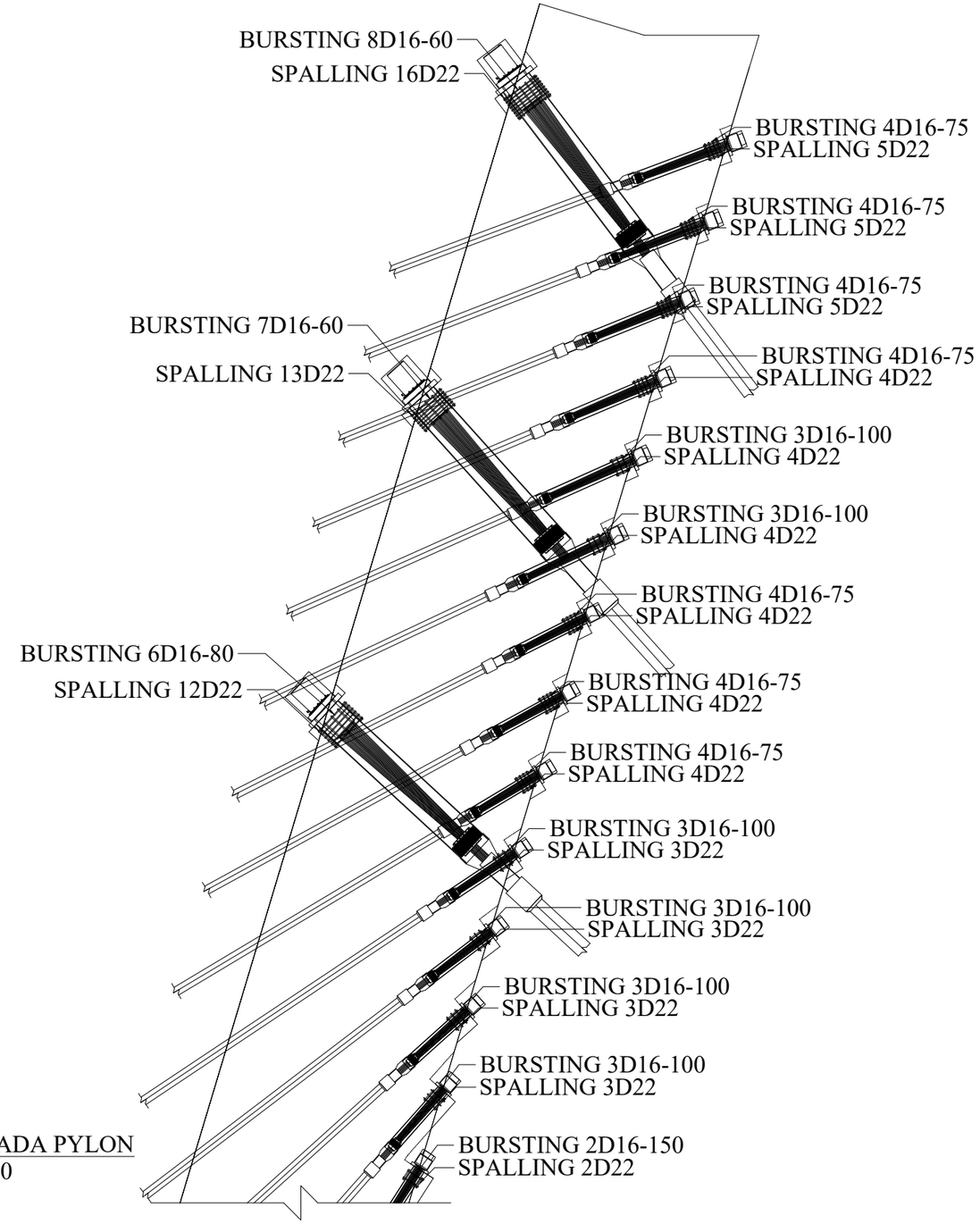

ANGKUR PADA PYLON
SKALA 1:100

	JUDUL TUGAS AKHIR	JUDUL GAMBAR	SKALA	DOSEN PEMBIMBING	MAHASISWA	KODE GBR	NO GBR
DEPARTEMEN TEKNIK INFRASTRUKTUR SIPIL FAKULTAS VOKASI INSTITUT TEKNOLOGI SEPULUH NOPEMBER	"PERENCANAAN ULANG STRUKTUR JEMBATAN UMBUL KAJI KAB.MALANG STA 13+805 DENGAN STRUKTUR *CABLE-STAYED"*	ANGKUR PADA PYLON	1:100	Ir. IBNU PUDJI R, MS NIP. 19600105 198603 1 003 Ir. CHOMAEDHI, CES.Geo NIP. 19550319 198403 1 001	AULIA ULUL ABSHOR NRP. 10111610013002	STR	12

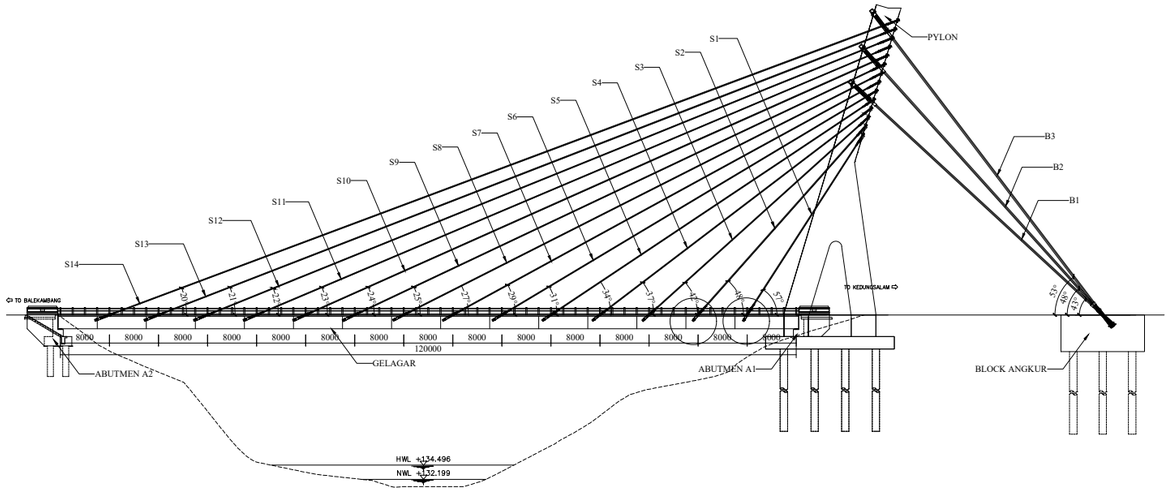

KEYPLAN

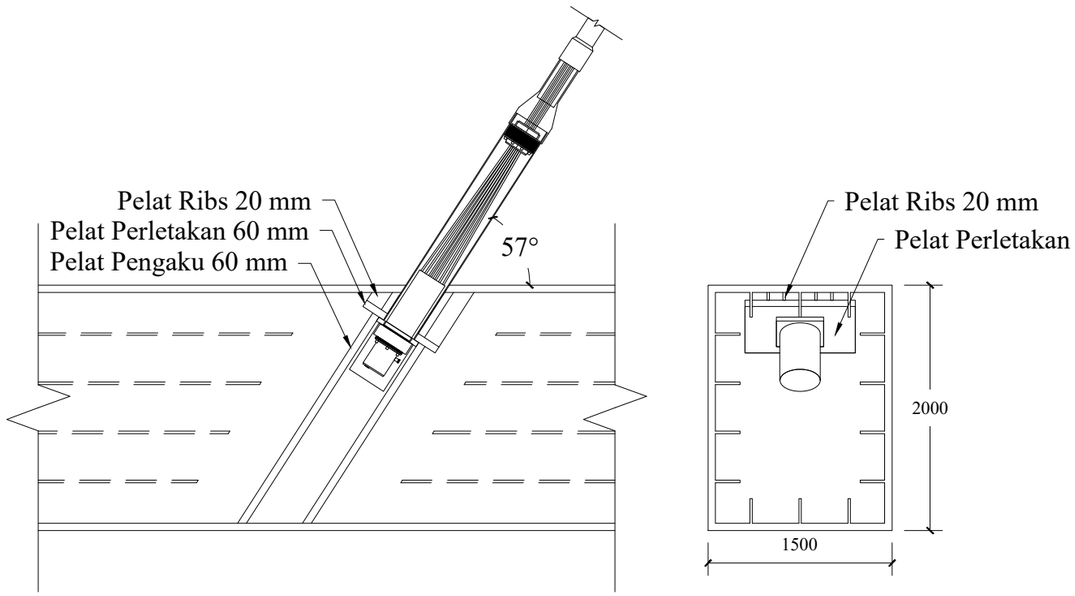

DETAIL ANGKUR S1 PADA BOX
SKALA 1:50

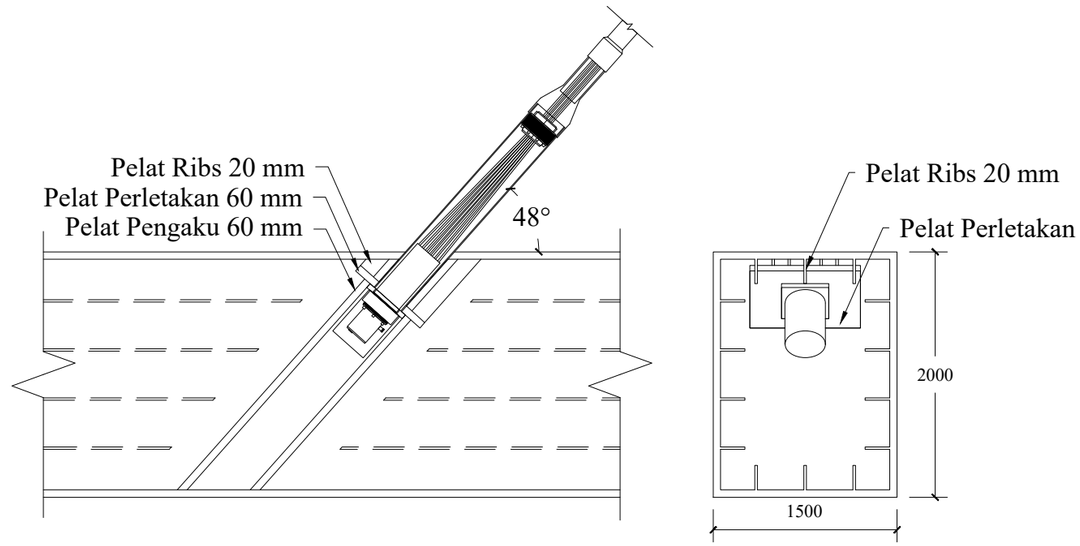

DETAIL ANGKUR S2 PADA BOX
SKALA 1:50

	JUDUL TUGAS AKHIR	JUDUL GAMBAR	SKALA	DOSEN PEMBIMBING	MAHASISWA	KODE GBR	NO GBR
DEPARTEMEN TEKNIK INFRASTRUKTUR SIPIL FAKULTAS VOKASI INSTITUT TEKNOLOGI SEPULUH NOPEMBER	"PERENCANAAN ULANG STRUKTUR JEMBATAN UMBUL KAJI KAB.MALANG STA 13+805 DENGAN STRUKTUR *CABLE-STAYED"*	-DETAIL ANGKUR S1 - DETAIL ANGKUR S2	1:50 1:50	Ir. IBNU PUDJI R, MS NIP. 19600105 198603 1 003 Ir. CHOMAEDHI, CES.Geo NIP. 19550319 198403 1 001	AULIA ULUL ABSHOR NRP. 10111610013002	STR	13

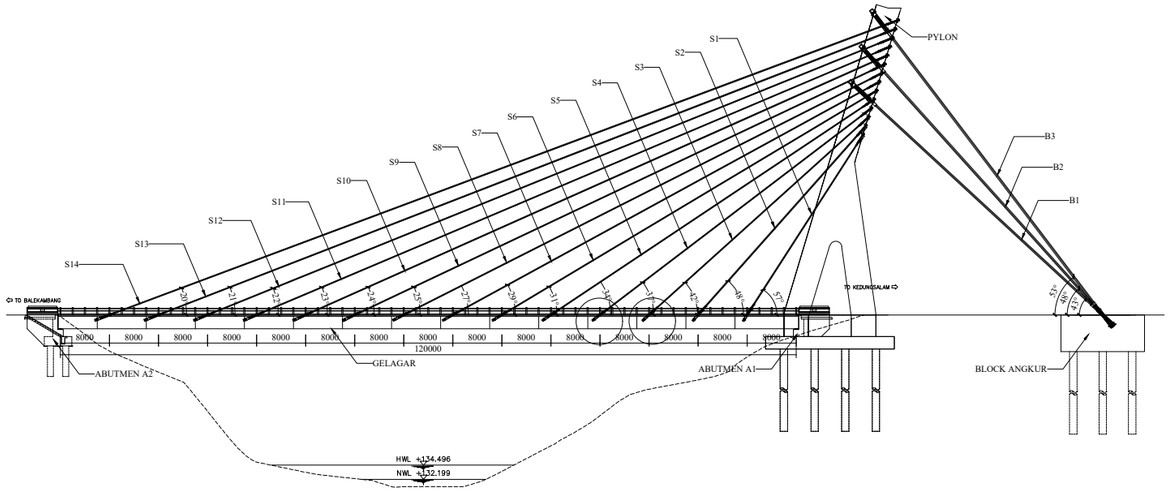

KEYPLAN

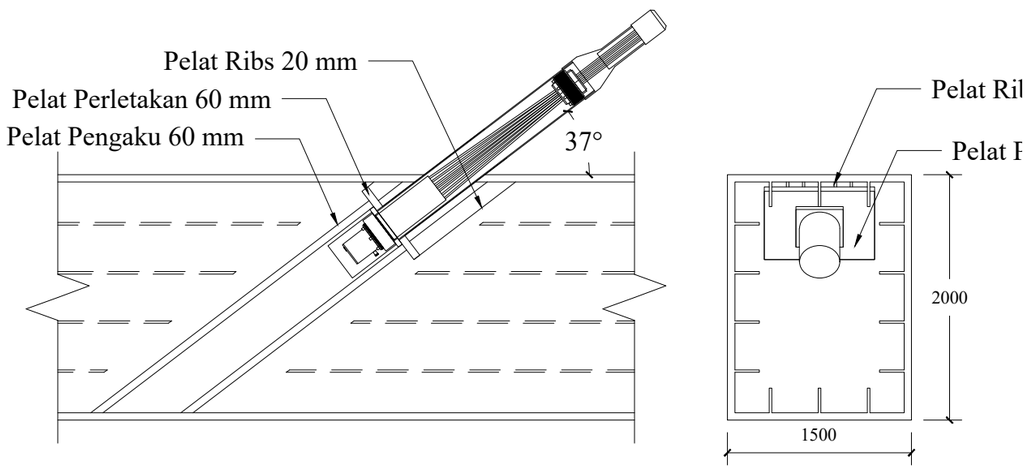

DETAIL ANGKUR S3 PADA BOX
SKALA 1:50

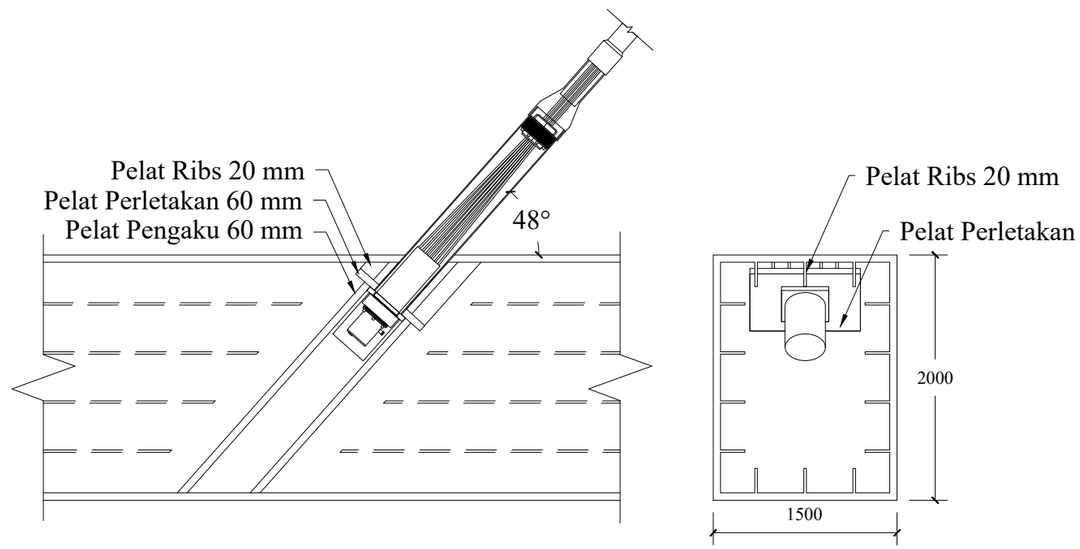

DETAIL ANGKUR S4 PADA BOX
SKALA 1:50

	JUDUL TUGAS AKHIR	JUDUL GAMBAR	SKALA	DOSEN PEMBIMBING	MAHASISWA	KODE GBR	NO GBR
DEPARTEMEN TEKNIK INFRASTRUKTUR SIPIL FAKULTAS VOKASI INSTITUT TEKNOLOGI SEPULUH NOPEMBER	"PERENCANAAN ULANG STRUKTUR JEMBATAN UMBUL KAJI KAB.MALANG STA 13+805 DENGAN STRUKTUR *CABLE-STAYED*"	-DETAIL ANGKUR S3 - DETAIL ANGKUR S4	1:50 1:50	Ir. IBNU PUDJI R, MS NIP. 19600105 198603 1 003 Ir. CHOMAEDHI, CES.Geo NIP. 19550319 198403 1 001	AULIA ULUL ABSHOR NRP. 10111610013002	STR	14

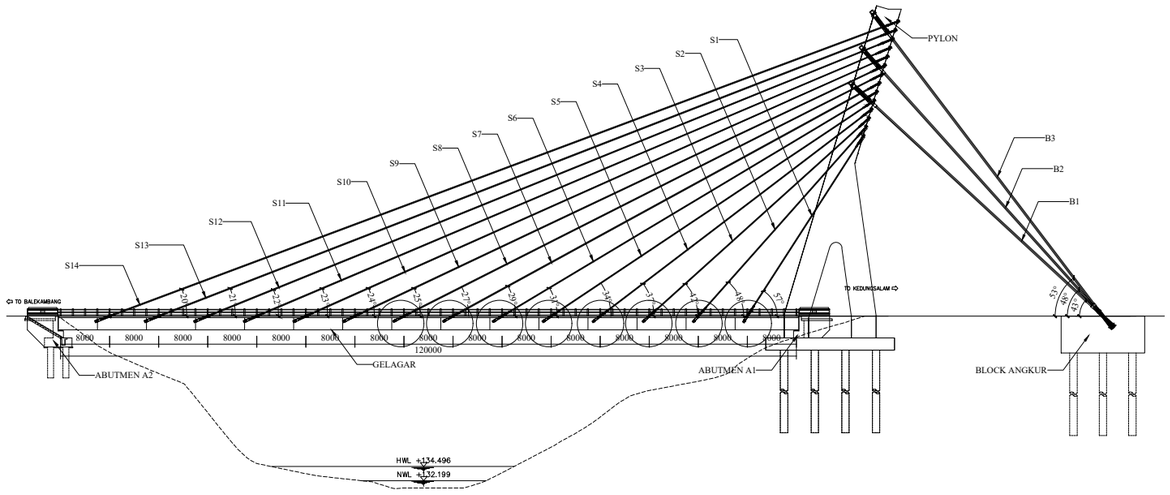

KEYPLAN

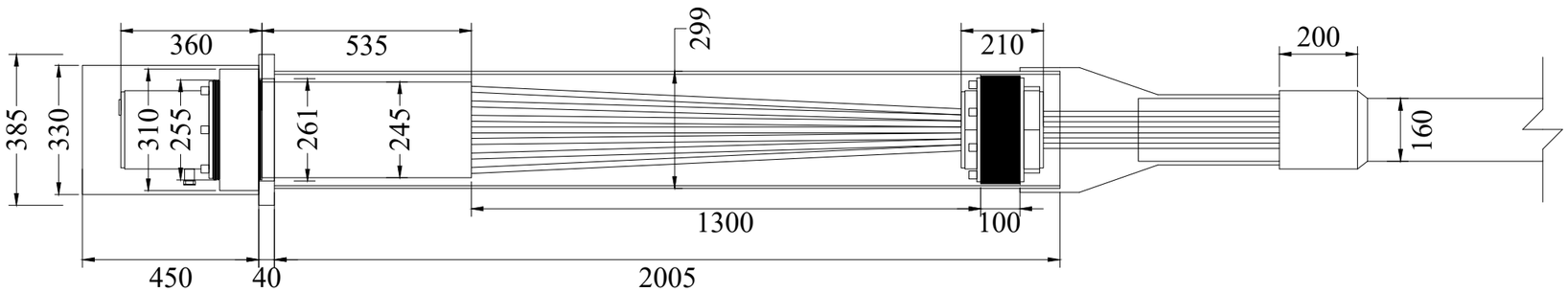

DETAIL STRESSING ANGKUR STRAND 22
SKALA 1:15

	JUDUL TUGAS AKHIR	JUDUL GAMBAR	SKALA	DOSEN PEMBIMBING	MAHASISWA	KODE GBR	NO GBR
DEPARTEMEN TEKNIK INFRASTRUKTUR SIPIL FAKULTAS VOKASI INSTITUT TEKNOLOGI SEPULUH NOPEMBER	"PERENCANAAN ULANG STRUKTUR JEMBATAN UMBUL KAJI KAB.MALANG STA 13+805 DENGAN STRUKTUR *CABLE-STAYED"*	-DETAIL STRESSING ANGKUR STRAND 22	1:15	Ir. IBNU PUDJI R, MS NIP. 19600105 198603 1 003 Ir. CHOMAEDHI, CES.Geo NIP. 19550319 198403 1 001	AULIA ULUL ABSHOR NRP. 10111610013002	STR	15

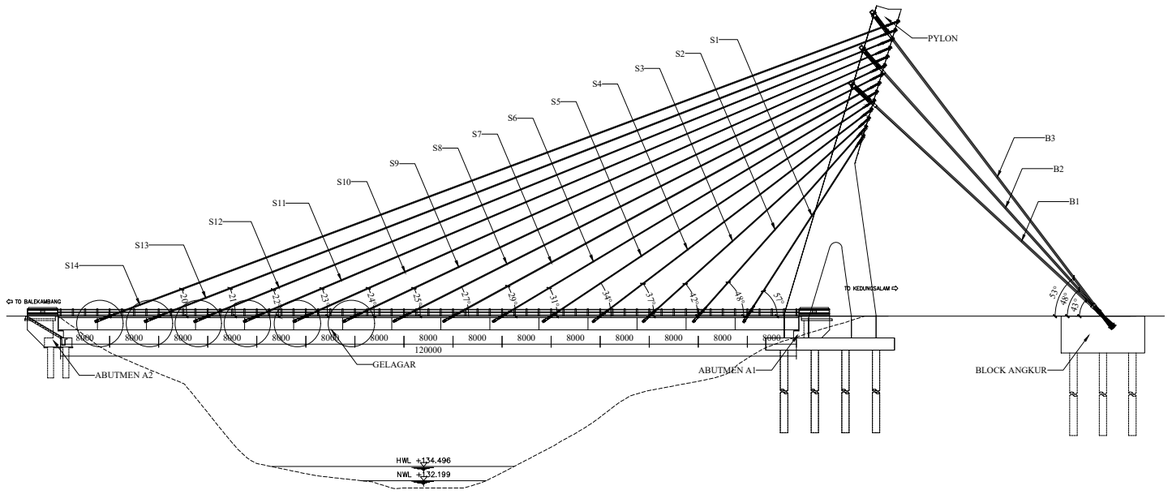

KEYPLAN

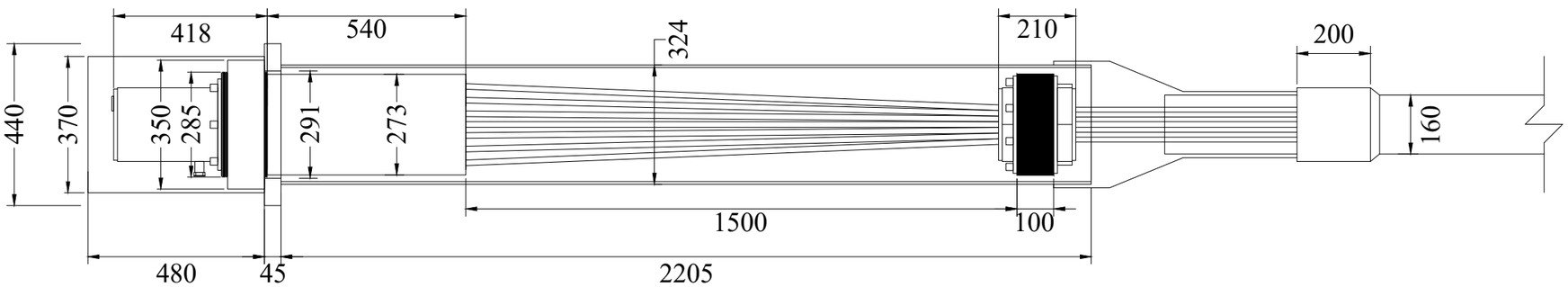

DETAIL STRESSING ANGKUR STRAND 29
SKALA 1:15

	JUDUL TUGAS AKHIR	JUDUL GAMBAR	SKALA	DOSEN PEMBIMBING	MAHASISWA	KODE GBR	NO GBR
DEPARTEMEN TEKNIK INFRASTRUKTUR SIPIL FAKULTAS VOKASI INSTITUT TEKNOLOGI SEPULUH NOPEMBER	"PERENCANAAN ULANG STRUKTUR JEMBATAN UMBUL KAJI KAB.MALANG STA 13+805 DENGAN STRUKTUR *CABLE-STAYED"*	-DETAIL STRESSING ANGKUR STRAND 29	1:15	Ir. IBNU PUDJI R, MS NIP. 19600105 198603 1 003 Ir. CHOMAEDHI, CES.Geo NIP. 19550319 198403 1 001	AULIA ULUL ABSHOR NRP. 10111610013002	STR	16

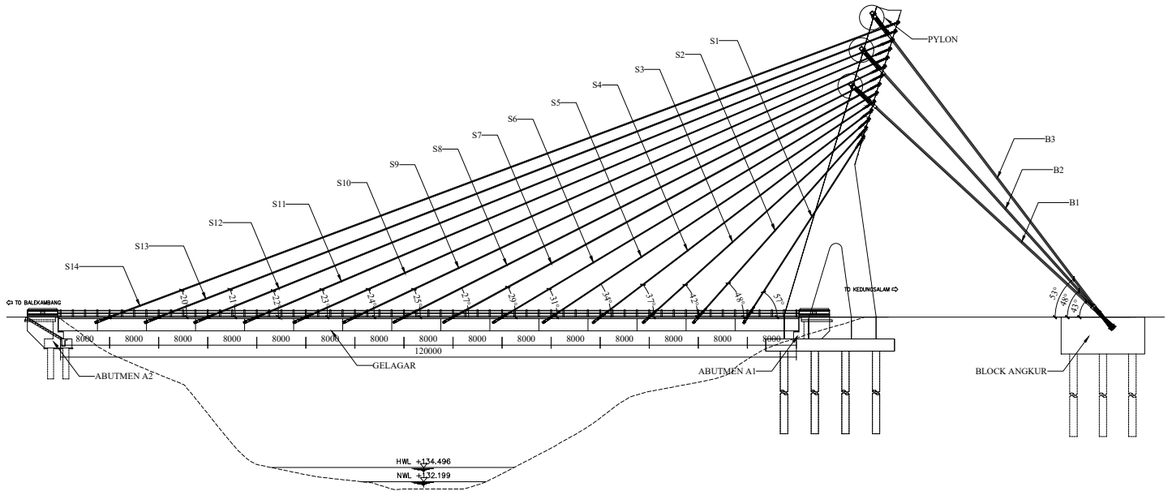

KEYPLAN

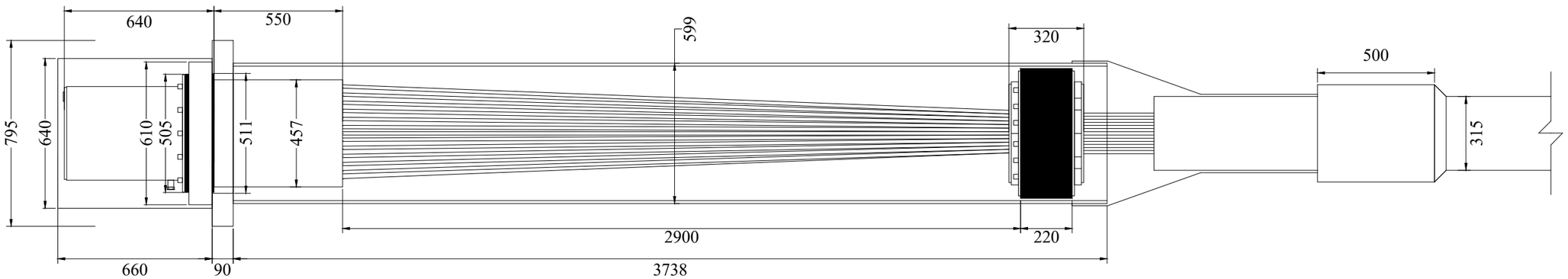

DETAIL STRESSING ANGKUR STRAND 98
SKALA 1:20

	JUDUL TUGAS AKHIR	JUDUL GAMBAR	SKALA	DOSEN PEMBIMBING	MAHASISWA	KODE GBR	NO GBR
DEPARTEMEN TEKNIK INFRASTRUKTUR SIPIL FAKULTAS VOKASI INSTITUT TEKNOLOGI SEPULUH NOPEMBER	"PERENCANAAN ULANG STRUKTUR JEMBATAN UMBUL KAJI KAB.MALANG STA 13+805 DENGAN STRUKTUR *CABLE-STAYED"*	-DETAIL STRESSING ANGKUR STRAND 98	1:20	Ir. IBNU PUDJI R, MS NIP. 19600105 198603 1 003 Ir. CHOMAEDHI, CES.Geo NIP. 19550319 198403 1 001	AULIA ULUL ABSHOR NRP. 10111610013002	STR	17

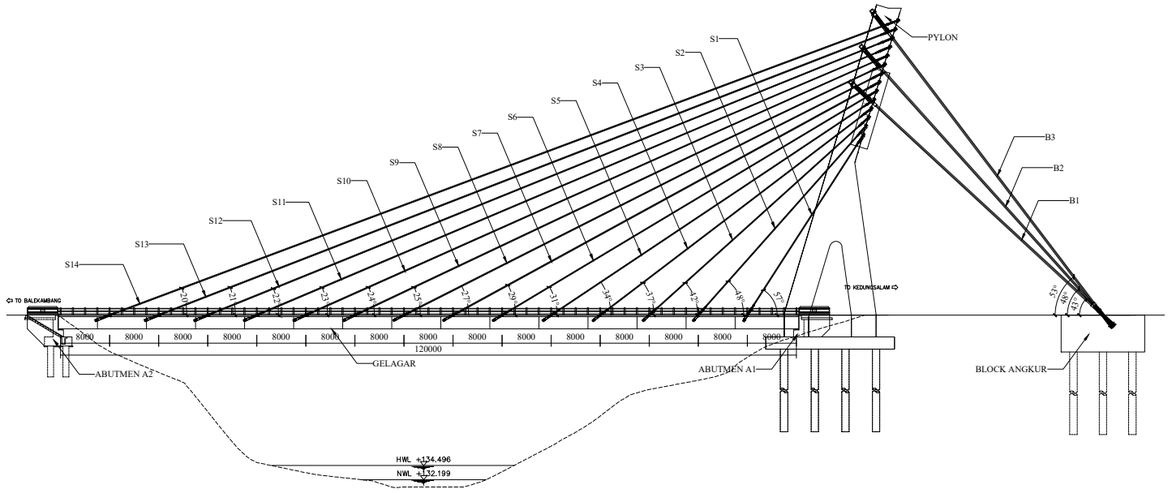

KEYPLAN

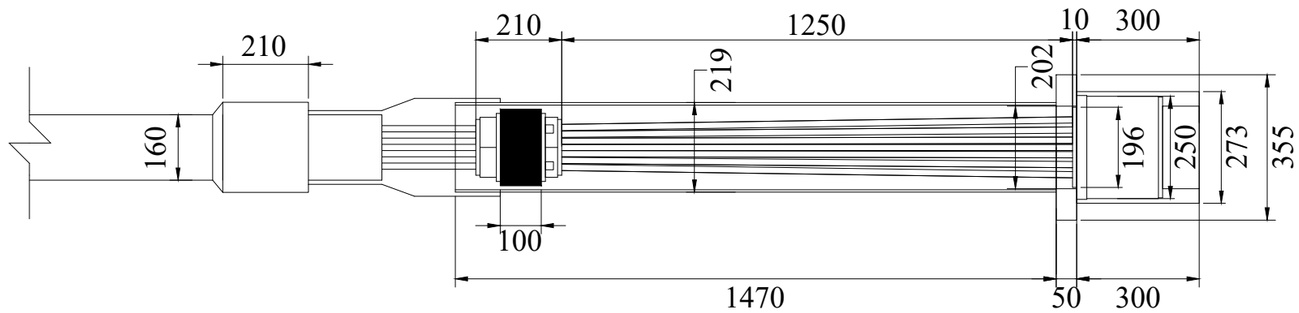

DETAIL FIXED ANGKUR STRAND 22
SKALA 1:15

	JUDUL TUGAS AKHIR	JUDUL GAMBAR	SKALA	DOSEN PEMBIMBING	MAHASISWA	KODE GBR	NO GBR
DEPARTEMEN TEKNIK INFRASTRUKTUR SIPIL FAKULTAS VOKASI INSTITUT TEKNOLOGI SEPULUH NOPEMBER	"PERENCANAAN ULANG STRUKTUR JEMBATAN UMBUL KAJI KAB.MALANG STA 13+805 DENGAN STRUKTUR *CABLE-STAYED"*	-DETAIL FIXED ANGKUR STRAND 22	1:15	Ir. IBNU PUDJI R, MS NIP. 19600105 198603 1 003 Ir. CHOMAEDHI, CES.Geo NIP. 19550319 198403 1 001	AULIA ULUL ABSHOR NRP. 10111610013002	STR	18

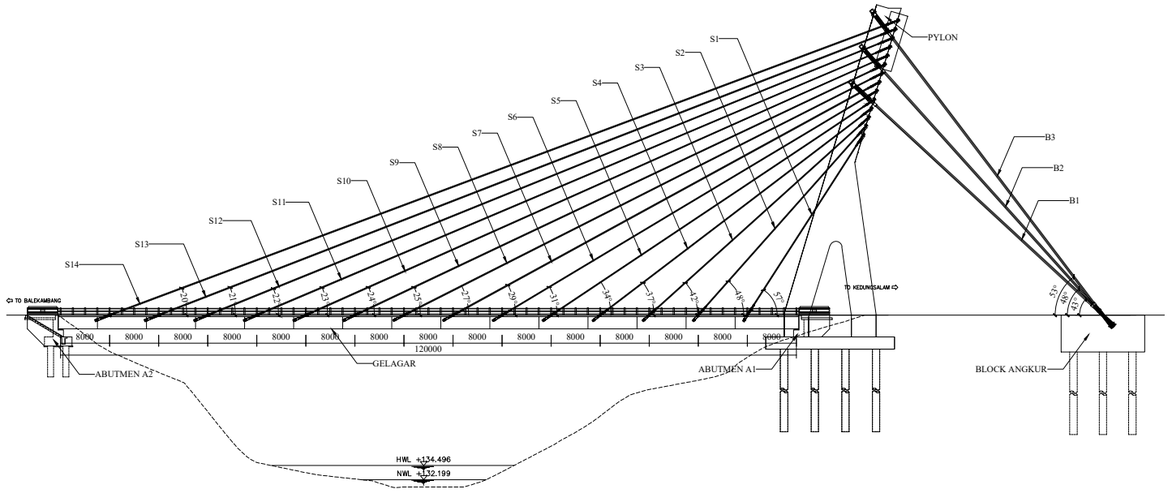

KEYPLAN

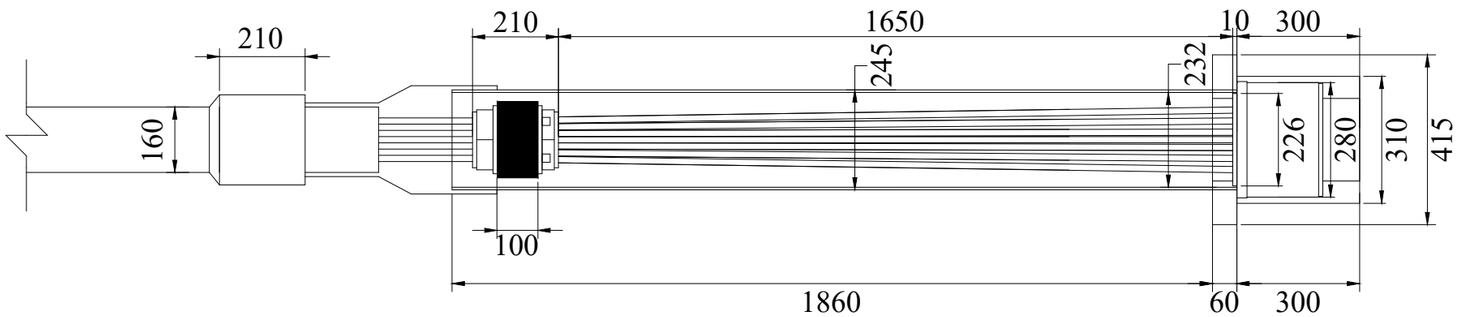

DETAIL FIXED ANGKUR STRAND 29
SKALA 1:15

	JUDUL TUGAS AKHIR	JUDUL GAMBAR	SKALA	DOSEN PEMBIMBING	MAHASISWA	KODE GBR	NO GBR
DEPARTEMEN TEKNIK INFRASTRUKTUR SIPIL FAKULTAS VOKASI INSTITUT TEKNOLOGI SEPULUH NOPEMBER	"PERENCANAAN ULANG STRUKTUR JEMBATAN UMBUL KAJI KAB.MALANG STA 13+805 DENGAN STRUKTUR *CABLE-STAYED"*	-DETAIL FIXED ANGKUR STRAND 29	1:15	Ir. IBNU PUDJI R, MS NIP. 19600105 198603 1 003 Ir. CHOMAEDHI, CES.Geo NIP. 19550319 198403 1 001	AULIA ULUL ABSHOR NRP. 10111610013002	STR	19

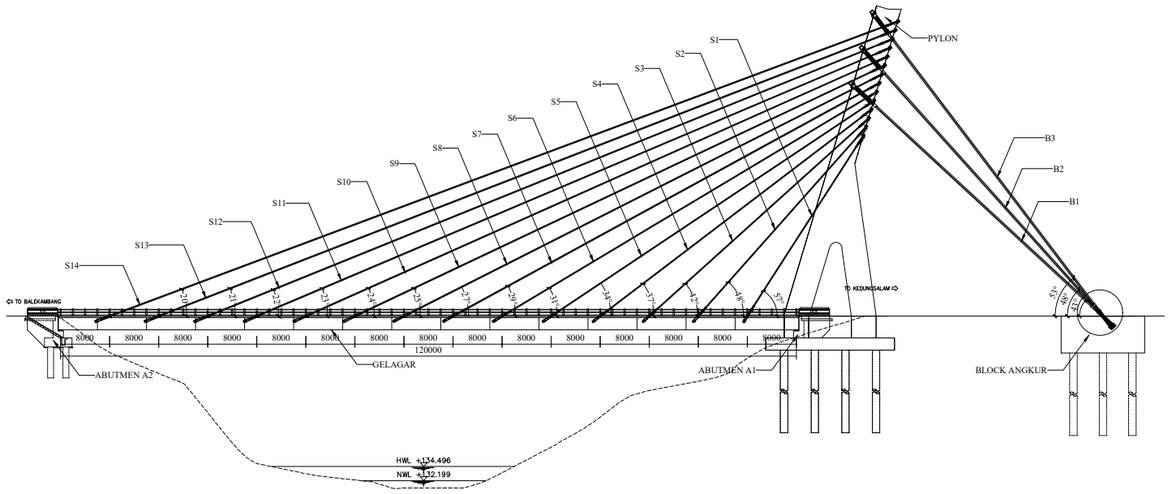

KEYPLAN

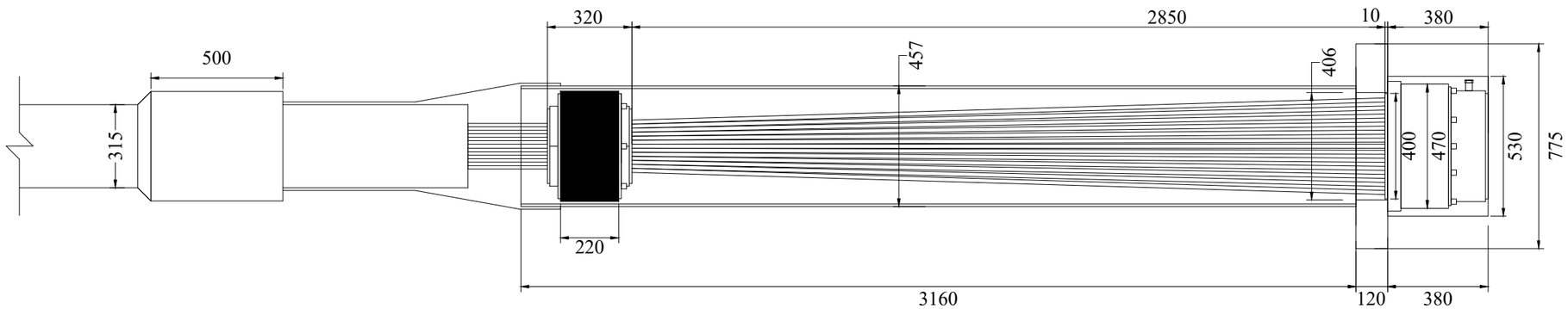

DETAIL FIXED ANGKUR STRAND 98
SKALA 1:20

	JUDUL TUGAS AKHIR	JUDUL GAMBAR	SKALA	DOSEN PEMBIMBING	MAHASISWA	KODE GBR	NO GBR
DEPARTEMEN TEKNIK INFRASTRUKTUR SIPIL FAKULTAS VOKASI INSTITUT TEKNOLOGI SEPULUH NOPEMBER	"PERENCANAAN ULANG STRUKTUR JEMBATAN UMBUL KAJI KAB.MALANG STA 13+805 DENGAN STRUKTUR *CABLE-STAYED"*	-DETAIL FIXED ANGKUR STRAND 98	1:20	Ir. IBNU PUDJI R, MS NIP. 19600105 198603 1 003 Ir. CHOMAEDHI, CES.Geo NIP. 19550319 198403 1 001	AULIA ULUL ABSHOR NRP. 10111610013002	STR	20

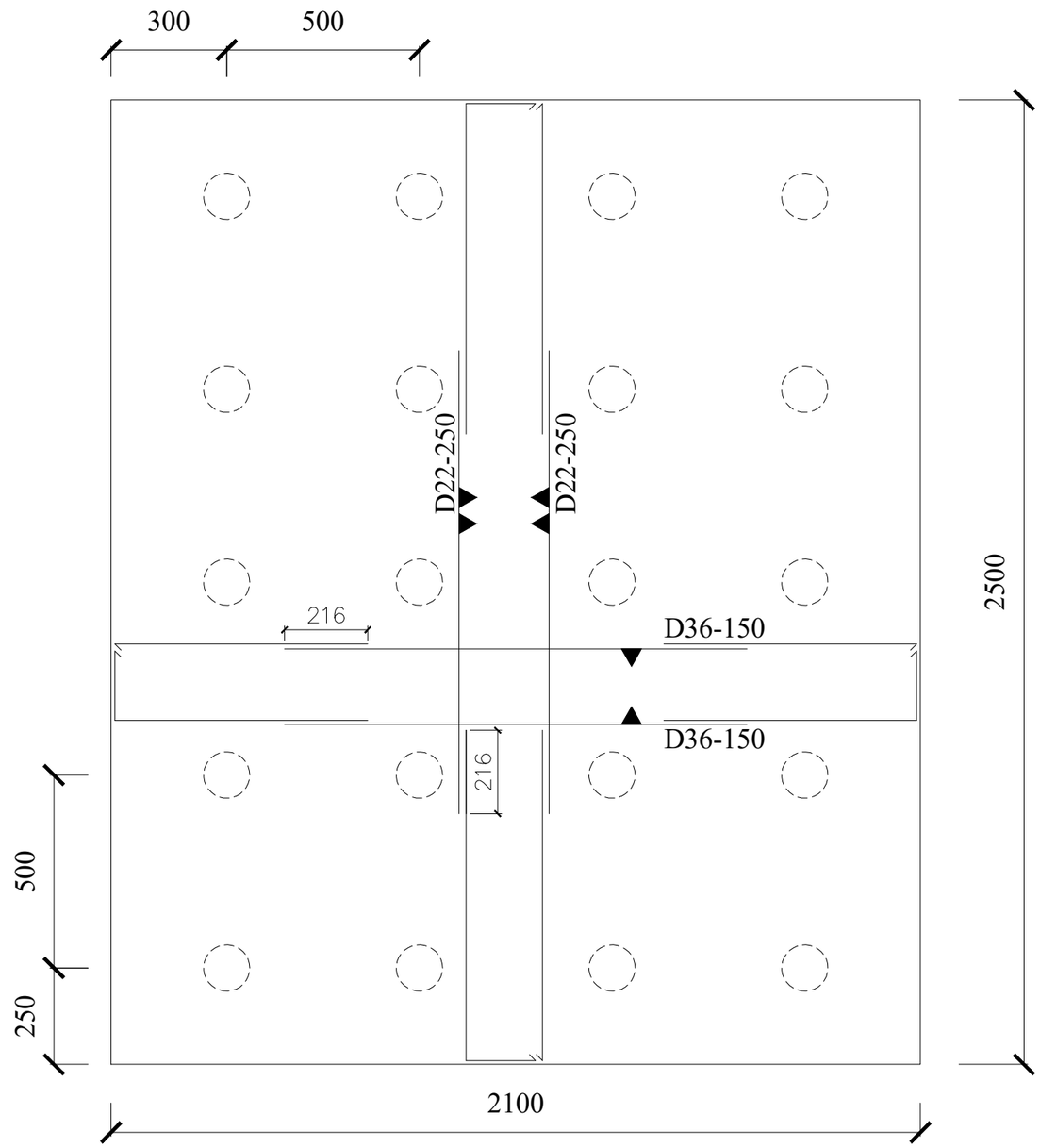

PENULANGAN PILE CAP A1
SKALA 1:150

	JUDUL TUGAS AKHIR	JUDUL GAMBAR	SKALA	DOSEN PEMBIMBING	MAHASISWA	KODE GBR	NO GBR
DEPARTEMEN TEKNIK INFRASTRUKTUR SIPIL FAKULTAS VOKASI INSTITUT TEKNOLOGI SEPULUH NOPEMBER	"PERENCANAAN ULANG STRUKTUR JEMBATAN UMBUL KAJI KAB.MALANG STA 13+805 DENGAN STRUKTUR *CABLE-STAYED"*	PENULANGAN PILE CAP A1	1:150	Ir. IBNU PUDJI R, MS NIP. 19600105 198603 1 003 Ir. CHOMAEDHI, CES.Geo NIP. 19550319 198403 1 001	AULIA ULUL ABSHOR NRP. 10111610013002	STR	21

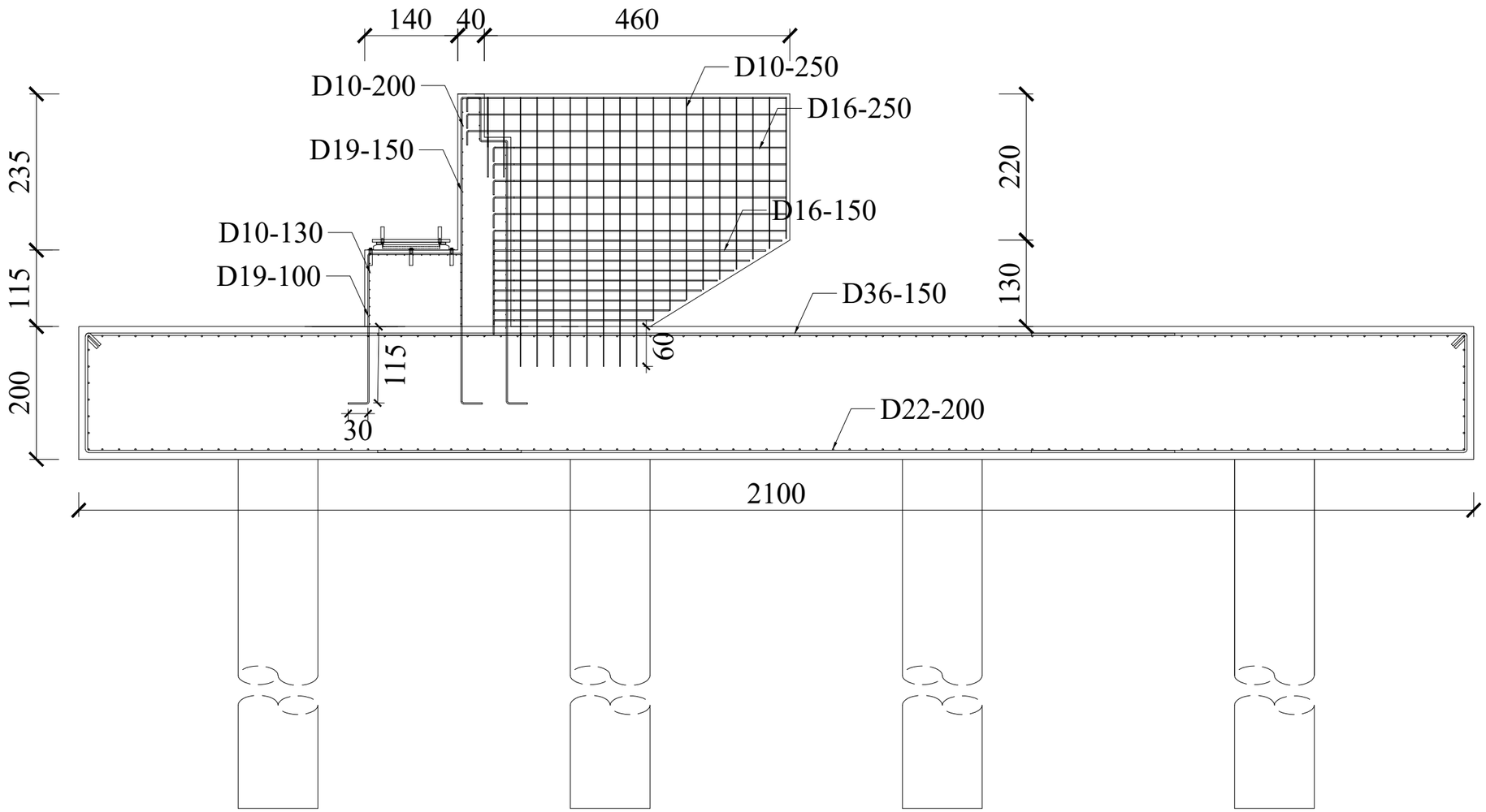

PENULANGAN ABUTMENT A1
SKALA 1:75

	JUDUL TUGAS AKHIR	JUDUL GAMBAR	SKALA	DOSEN PEMBIMBING	MAHASISWA	KODE GBR	NO GBR
DEPARTEMEN TEKNIK INFRASTRUKTUR SIPIL FAKULTAS VOKASI INSTITUT TEKNOLOGI SEPULUH NOPEMBER	"PERENCANAAN ULANG STRUKTUR JEMBATAN UMBUL KAJI KAB.MALANG STA 13+805 DENGAN STRUKTUR *CABLE-STAYED"*	PENULANGAN ABUTMENT A1	1:75	Ir. IBNU PUDJI R, MS NIP. 19600105 198603 1 003 Ir. CHOMAEDHI, CES.Geo NIP. 19550319 198403 1 001	AULIA ULUL ABSHOR NRP. 10111610013002	STR	22

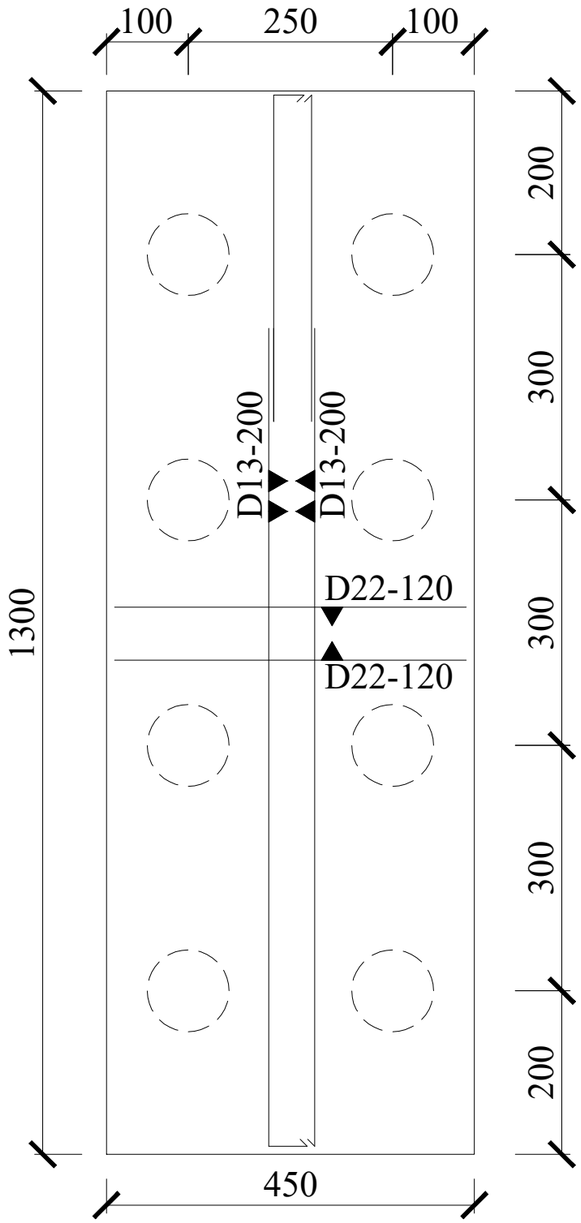

PENULANGAN PILE CAP A2
SKALA 1:100

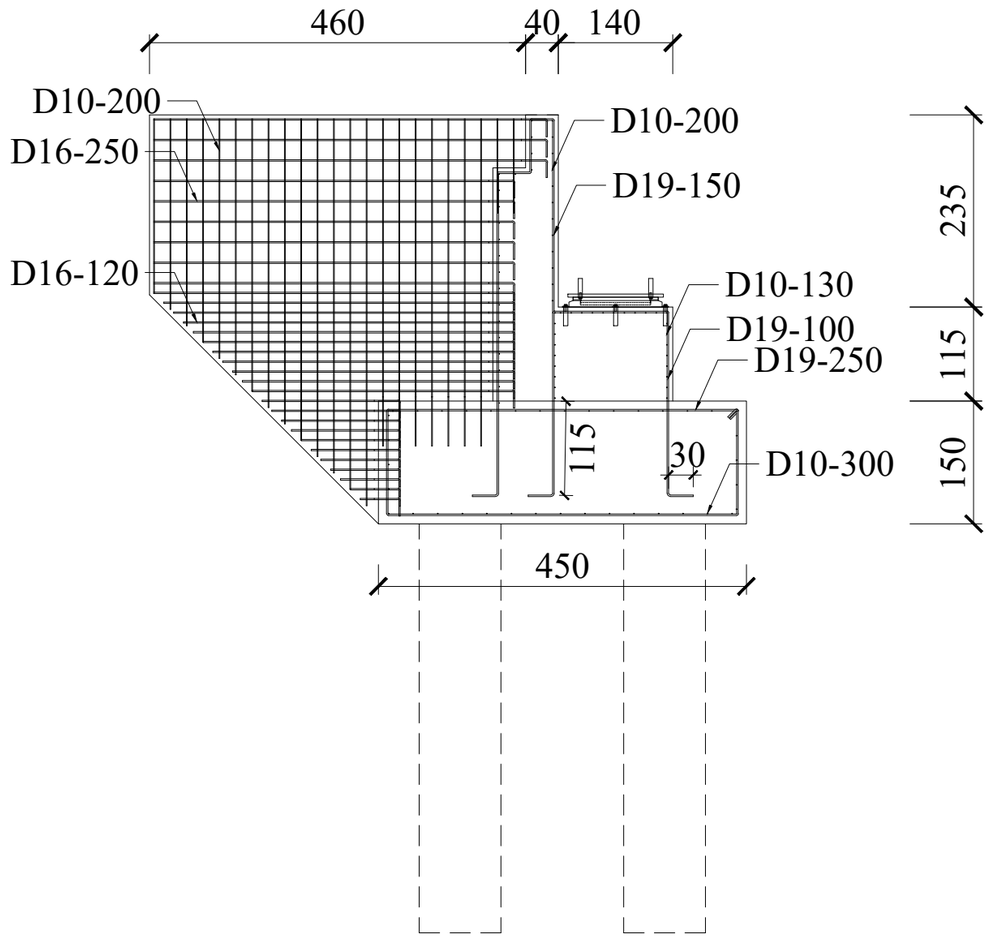

PENULANGAN ABUTMENT A2
SKALA 1:75

	JUDUL TUGAS AKHIR	JUDUL GAMBAR	SKALA	DOSEN PEMBIMBING	MAHASISWA	KODE GBR	NO GBR
DEPARTEMEN TEKNIK INFRASTRUKTUR SIPIL FAKULTAS VOKASI INSTITUT TEKNOLOGI SEPULUH NOPEMBER	"PERENCANAAN ULANG STRUKTUR JEMBATAN UMBUL KAJI KAB.MALANG STA 13+805 DENGAN STRUKTUR *CABLE-STAYED"*	-PENULANGAN PILE CAP A2 -PENULANGAN ABUTMENT A2	1:100 1:75	Ir. IBNU PUDJI R, MS NIP. 19600105 198603 1 003 Ir. CHOMAEDHI, CES.Geo NIP. 19550319 198403 1 001	AULIA ULUL ABSHOR NRP. 10111610013002	STR	23

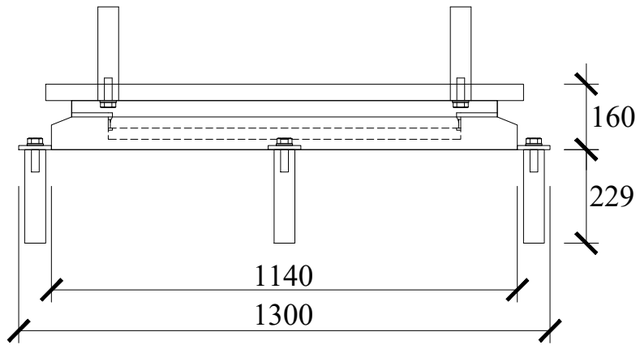

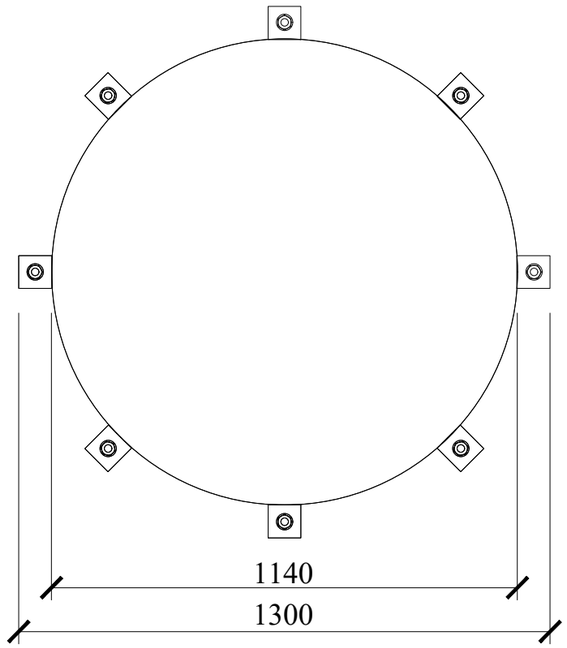

DETAIL POT BEARING
SKALA 1:15

	JUDUL TUGAS AKHIR	JUDUL GAMBAR	SKALA	DOSEN PEMBIMBING	MAHASISWA	KODE GBR	NO GBR
DEPARTEMEN TEKNIK INFRASTRUKTUR SIPIL FAKULTAS VOKASI INSTITUT TEKNOLOGI SEPULUH NOPEMBER	"PERENCANAAN ULANG STRUKTUR JEMBATAN UMBUL KAJI KAB.MALANG STA 13+805 DENGAN STRUKTUR *CABLE-STAYED"*	-DETAIL POT BEARING	1:15	Ir. IBNU PUDJI R, MS NIP. 19600105 198603 1 003 Ir. CHOMAEDHI, CES.Geo NIP. 19550319 198403 1 001	AULIA ULUL ABSHOR NRP. 10111610013002	STR	24